Auto radio **CR102A**

Service
Service
Service

Service Manual

Subject to Modification
4802 725 17162
Printed in Australia

PHILIPS

SERVICE MANUAL

AM-FM MPX.RADIO WITH ELECTRONIC TUNER

Model CR102A (TEN Model No.AE-3171PH1)

SPECIFICATIONS

	(AM)	(FM)
TUNING RANGE	531 to 1611kHz (9kHz step)	87.5 to 108 MHz (100kHz step)
INTERMEDIATE FREQUENCY	450 kHz	10.7 MHz
SENSITIVITY	35dBμ or better	————
SENSITIVITY AT ELECTRONIC TUNING	Distant : 32± 5dBμ	Distant : 24± 8dBμ
LIMITING SENSITIVITY	————	7 ± 5 dBμ
SEPARATION	18dB or better (at 1kHz)	35dB or better (at 1kHz)
SIGNAL TO NOISE RATIO	21dB or better (35 dBμ input)	35dB or better (18 dBμ input)
ELECTRICAL FIDELITY	100Hz : 0 ± 3 dB (74 dBμ input,Refer.400Hz)	100Hz : 0 ± 3 dB (54 dBμ input,Refer.400Hz)
	4 kHz : -14 ± 4 dB (74 dBμ input,Refer.400Hz)	10kHz : -15 ± 5 dB (54 dBμ input,Refer.400Hz)
POWER OUTPUT(MAX.)	2.5watts or better (T.H.D.= 10%)	
SPEAKER INPEDANCE	4 ohm	
POWER INPUT	12-volt car battery, negative terminal to ground	
VOLTAGE	13.2 VDC	
CURRENT	1.5 amperes ± 20% (MAX.)	
	5m amperes or better (back up current)	
SEMICONDUCTOR	7 ICs, 28 Transistors, 24 Diodes	
DIMENSIONS	180 (W) × 50 (H) × 130 (D) mm	
WEIGHT	Approx.0.9kg	

DETAILS OF CONNECTOR

PIN	CONNECTOR	COLOR
1	N.C.	—
2	ACC 12V ⊕	RED
3	SPEAKER FR L/H⊕	GRN
4	SPEAKER FR R/H⊕	BLU
5	SPEAKER FR R/H⊖	BLK
6	SPEAKER FR L/H⊖	BLK
7	GROUND	BLK
8	N.C.	—
9	ILLUM ⊕	WHT

PIN	CONNECTOR	COLOR
10	N.C.	—
11	N.C.	—
12	N.C.	—
13	BACK UP	YEL
14	N.C.	—

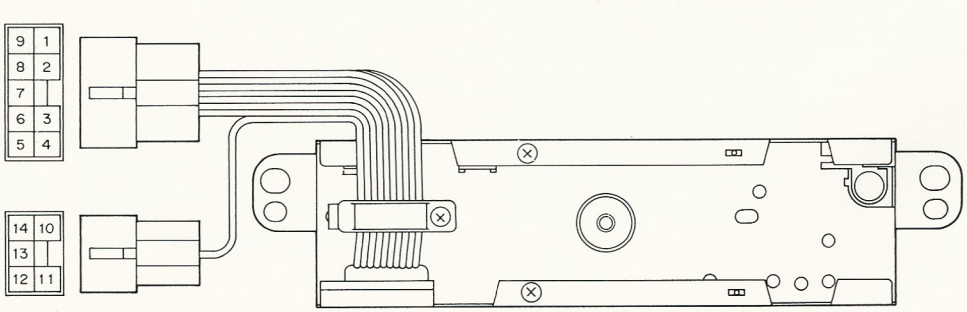

Fig. 1

FM ALIGNMENT

Standard adjustment condition

a. Power supply ·····13.2V

b. AM/FM changing switch ·····FM

c. Bass/treble ·····Center

d. Balance ·····Center

e. Volume ····· Adjust to get 1.4V output level.

f. Connections

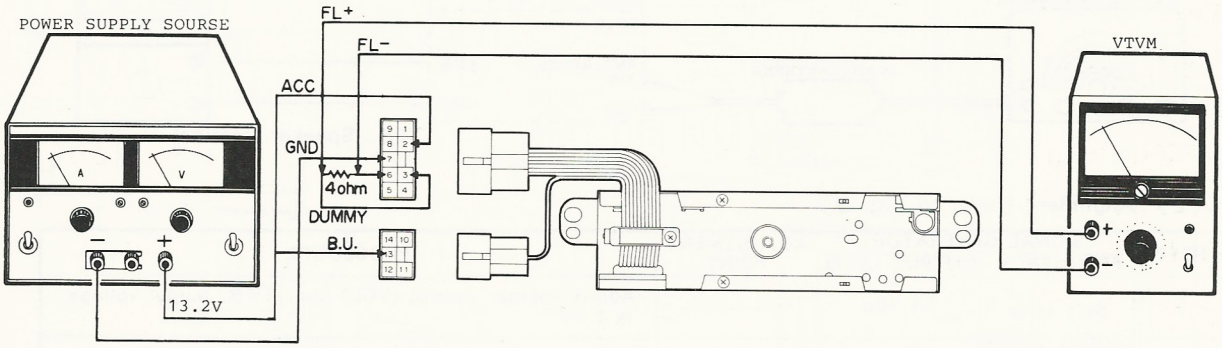

Fig. 5

〔1〕 IF Alignment

(1) Connections

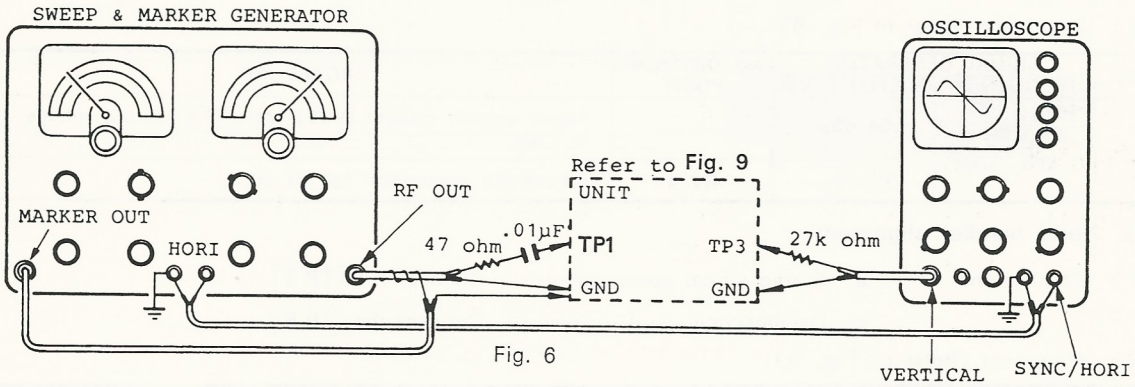

Fig. 6

SWEEP GENERATOR OUTPUT	OSCILLOSCOPE VERTICAL INPUT	OSCILLOSCOPE HORIZONTAL INPUT
Antenna receptacle (J1) TP 1	Connect TP 3 in Fig. 9 through 27K-ohm resistor	Connect with HORIZONTAL terminal of sweep generator

(2) Alignment (Refer to Fig. 9)

STEP	PURPOSE	SWEEP GENERATOR FREQUENCY	ADJUSTMENT POINTS	PROCEDURE
1	S curve	10.7 MHz	T 1	Adjust for full gain and length of s-curve at linears. (See Fig. 7)
2	S curve (Center)	SG 10.7 MHz (400 Hz, 30%)		Fine-adjust the potential difference between IC 1 ⑦ and ⑱ pins for 0V.

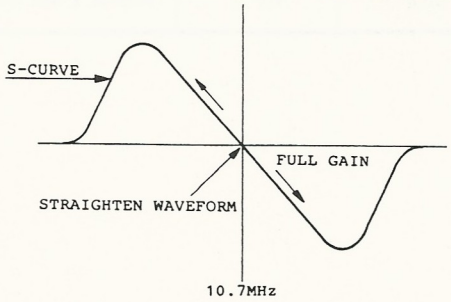

Fig. 7

NOTE: S curve center can be adjusted in the same manner by receiving local FM broadcast near 98.1 MHz.

[2] Limiting sensitivity alignment

(1) Connections

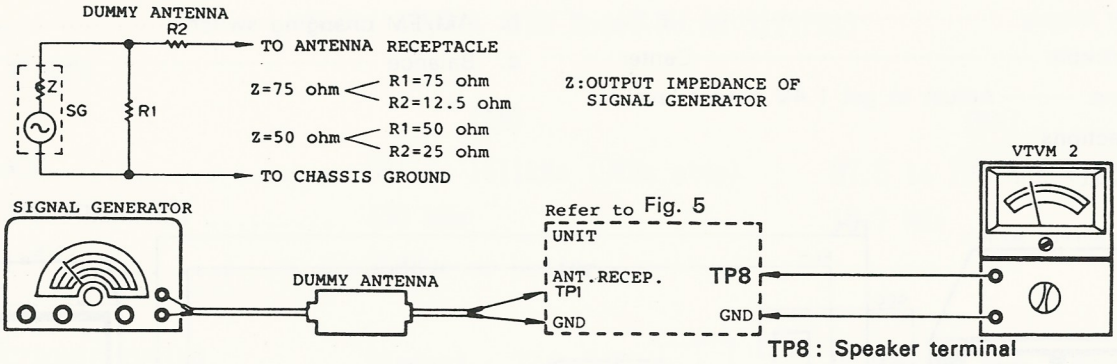

Fig. 8

(2) Alignment (Refer to Fig. 9)

STEP	SIGNAL GENERATOR FREQUENCY	SIGNAL GENERATOR OUTPUT LEVEL	ADJUSTMENT POINT	PROCEDURE
1	98.1 MHz (400Hz, 30%)	54 dBμ	———	Adjust volume control (VOL) until TP 8 output voltage is 1.4V.
2		10±5 dBμ	RV 1	Adjust output voltage for −3 dB (1V).

[3] ASC Working sensitivity alignment

(1) Connections Refer to Fig. 8

(2) Alignment (Refer to Fig. 9)

STEP	SIGNAL GENERATOR FREQUENCY	SIGNAL GENERATOR OUTPUT LEVEL	ADJUSTMENT POINT	PROCEDURE
1	98.1 MHz (1 kHz, 30%)	54 dBμ	———	Adjust volume control (VOL) until TP 8 output voltage is 1.4V.
2		30 dBμ	RV 4	Adjust the separation for 10 dB.

[4] Noise blanker alignment

(1) Connections
a. Stereo signal generator·····Connect the TP 1
b. Oscilloscope ·····Connect the TP 5

(2) Alignment (Refer to Fig. 9)

STEP	STEREO SIGNAL GENERATOR FREQUENCY	STEREO SIGNAL GENERATOR OUTPUT LEVEL	ADJUSTMENT POINT	PROCEDURE
1	98.1 MHz (Stereo mode, No modulation)	54 dBμ	RV 3	After making sure of "STEREO" display, adjust the pilot signal wave (19 kHz) for minimum.

[5] Separation alignment

(1) Connections
a. Stereo signal generator·····Connect the TP 1
b. Oscilloscope ·····Connect the TP 8 (L-ch)

(2) Alignment (Refer to Fig. 9)

STEP	STEREO SIGNAL GENERATOR FREQUENCY	STEREO SIGNAL GENERATOR OUTPUT LEVEL	ADJUSTMENT POINT	PROCEDURE
1	98.1 MHz (R-ch : 1 kHz, 30% L-ch : no modulation)	54 dBμ	RV 2	Adjust L-ch output level for minimum.

ADJUSTMENT POINTS

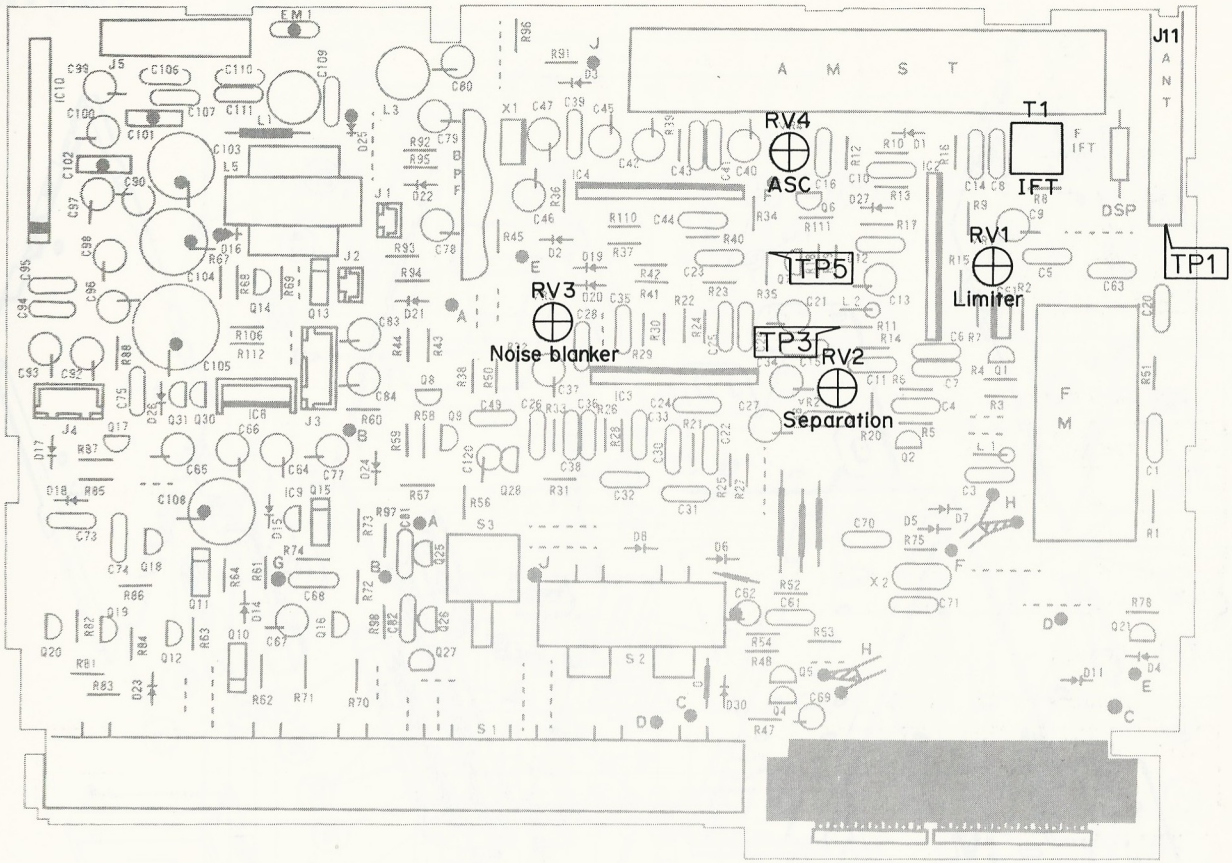

Fig. 9

EXPLODED VIEW
CR102A

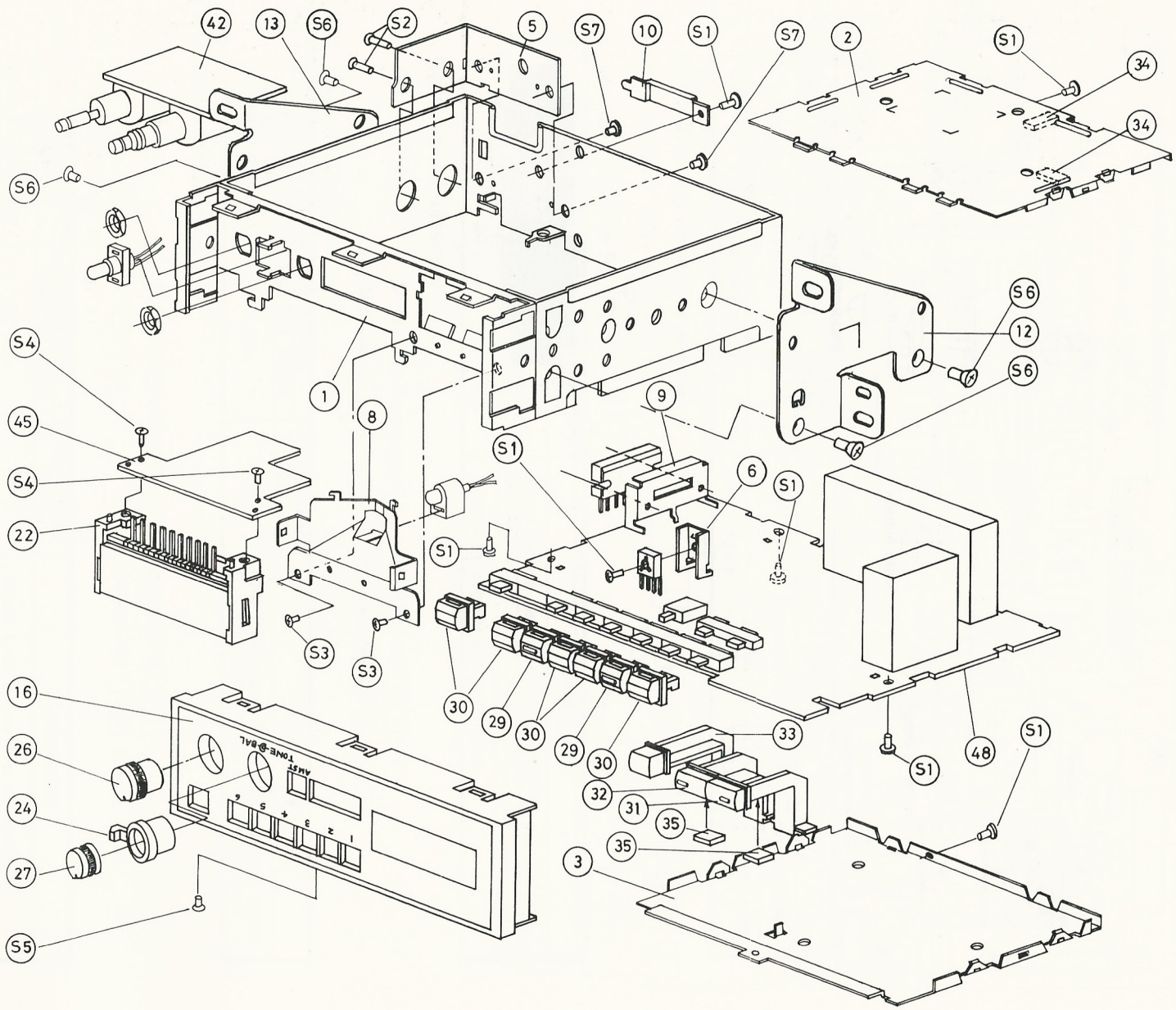

NOTE : Printed circuit board does not include component parts to be mounted.

Fig. 4

PC BOARD
CR102A

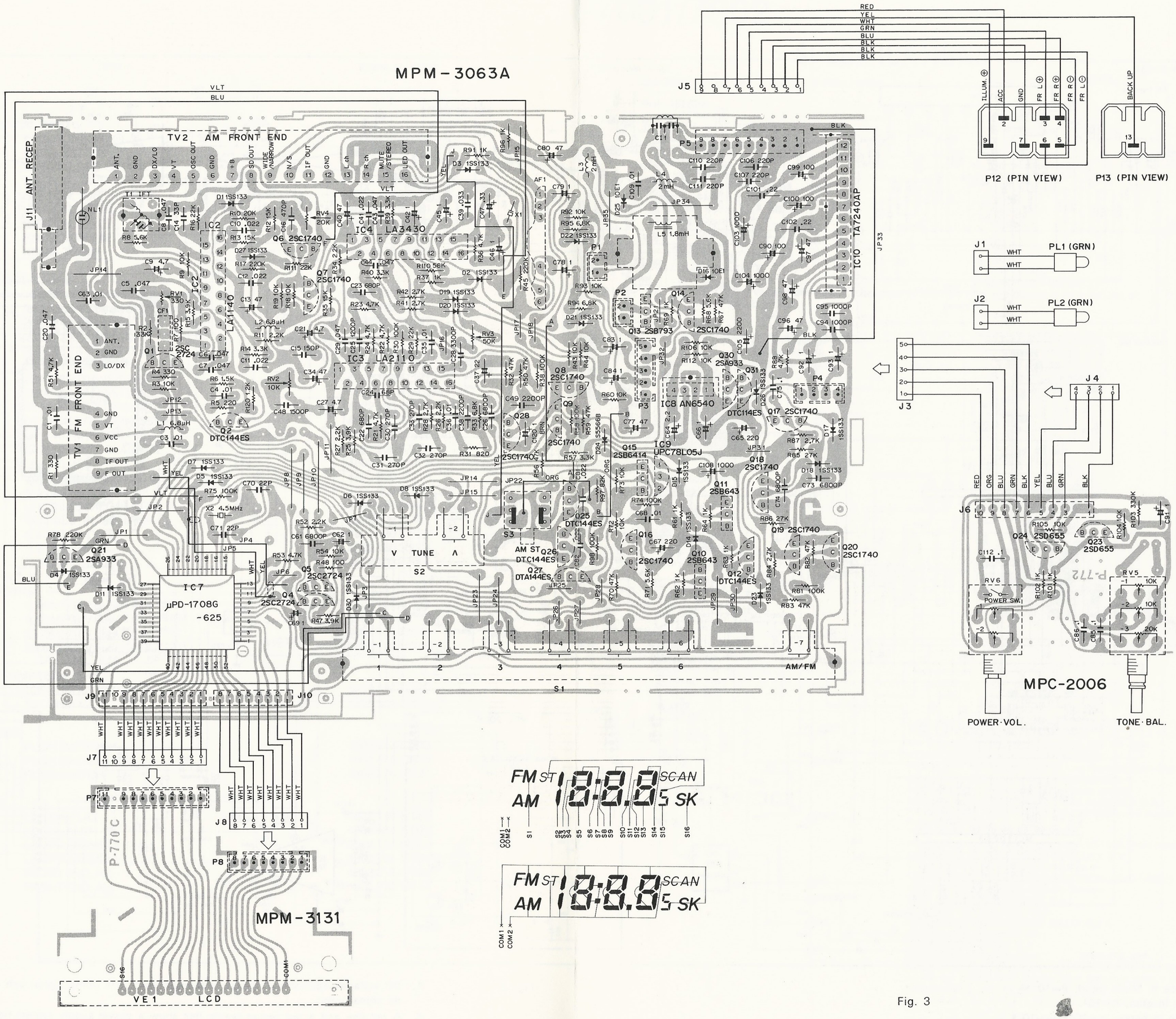

Fig. 3

SCHEMATIC
CR102A

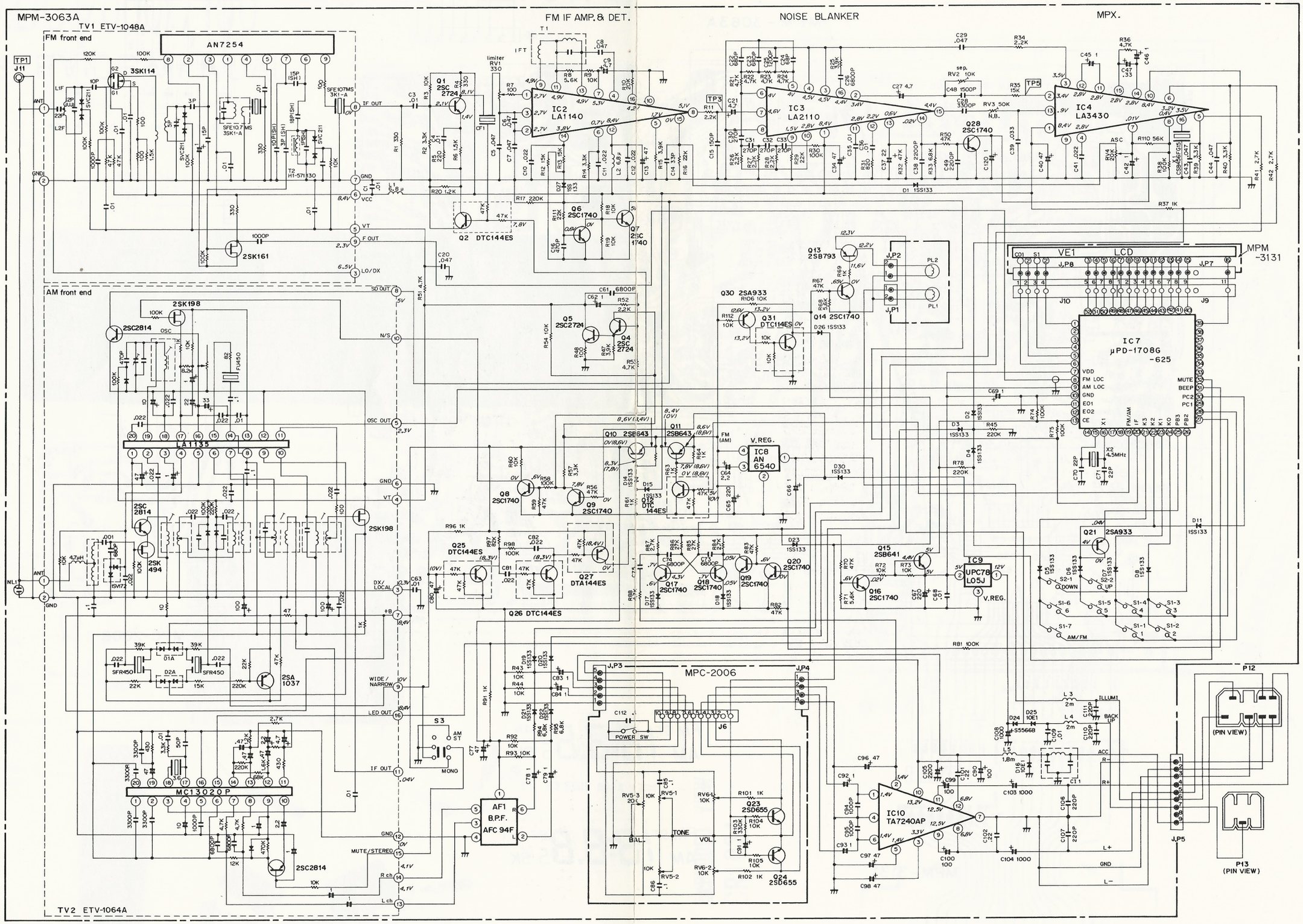

NOTES:
1. All capacitance in Micro farad, $P=10^{-12}$
2. All resistance in ohm, $K=10^{3}$
3. All inductance in henry, $m=10^{-3}$, $\mu=10^{-6}$

Fig. 2

4. DC voltages against the chassis measured with 10M ohms digital volt meter, power supply set at +13.2 V no signal input.
5. A red line and a red dotted feeble line show a power supply system flow and a signal system flow, respect

MECHANICAL PARTS

16	ESCUTCHEON	4802 459 47549
24	KNOB, BAL	4802 413 17226
29	BUTTON, PRE-SET (2,5)	4802 410 37177
30	BUTTON, AM/FM. PRE-SET 1,3,4,6	4802 410 37178
31	BUTTON, TUNE (DOWN)	4802 410 37179
32	BUTTON, TUNE (UP)	4802 410 37181
33	BUTTON, AM ST	4802 410 37182
26	KNOB, VOLUME	4802 413 17228
27	KNOB, TONE	4802 413 17229

SEMICONDUCTORS

Q1	2SC2724 TRANSISTOR	4802 130 67132
Q2	DT144ES/TT TRANSISTOR	4802 130 67051
Q6	2SC1740S TRANSISTOR	4822 130 60147
Q10	2SB643 TRANSISTOR	4802 130 47459
Q13	2SB793 TRANSISTOR	4802 130 47436
Q15	2SB641 TRANSISTOR	4802 130 47435
Q21	2SA933S TRANSISTOR	4802 130 67127
Q23	2SD655 TRANSISTOR	4822 130 41607
Q27	DTA144ES/TT TRANSISTOR	4822 130 42682
Q31	DTC114ES/TT TRANSISTOR	4802 130 67049
IC1	LA1140 FM IF DET.	4802 209 87458
IC2	LA2110 NOISE BLANKER	4802 209 87656
IC4	LA3430 MPX.	4802 209 17228
IC7	UPD-1708G-625 CONTROLLER	4802 209 27255
IC8	AN6540 REGULATOR 8.5V	4802 209 87559
IC9	UPC78L05J REGULATOR 5V	4802 209 87303
IC10	TA7240AP POWER AMP.	4802 209 87822
D1	1SS133/TD DIODE	4822 130 31626
D16	10E1 DIODE	4822 130 30684
D24	S5566B/TP DIODE	4802 103 37007

CAPACITORS

C103	1000MF/10V ELECTROLYTIC	4822 124 40178
C104	1000MF/10V ELECTROLYTIC	4822 124 40178
C105	2200MF/16V ELECTROLYTIC	4802 124 27085
C108	1000MF/16V ELECTROLYTIC	4802 124 40303

POTENTIOMETERS

RV5	10K OHM X2,20K OHM	4802 102 37194
RV6	10K OHM X2	4802 102 37193

SWITCHES

S2	PUSH SWITCH	4802 276 17313
S1	PUSH SWITCH	4802 276 17316
S3	PUSH SWITCH	4802 276 17321

OTHERS

VE1	LCD DISPLAY	4802 130 97061
NL1	NEON LAMP	4802 134 27047
PL1	LAMP ASSEMBLY	4802 134 47333
PL2	LAMP ASSEMBLY	4802 134 47334
TV1	FRONT END, FM	4802 210 17163
TV2	FRONT END, AM	4802 210 17164