Panasonic
CQ-VX2000
FM2
87.50
POWER
SOURCE
VOL
MUTE
LIVE
HALL
JAZZ
STADIUM
DISCO
VOCAL
CINEMA
INTEGRATED CD / CASSETTE RECEIVER WITH DSP

178mm
160mm
100mm
Panasonic
CQ-VX2000
FM2
87.50
POWER
SOURCE
VOL
MUTE
AUTO
SET
INTEGRATED CD / CASSETTE RECEIVER WITH DSP

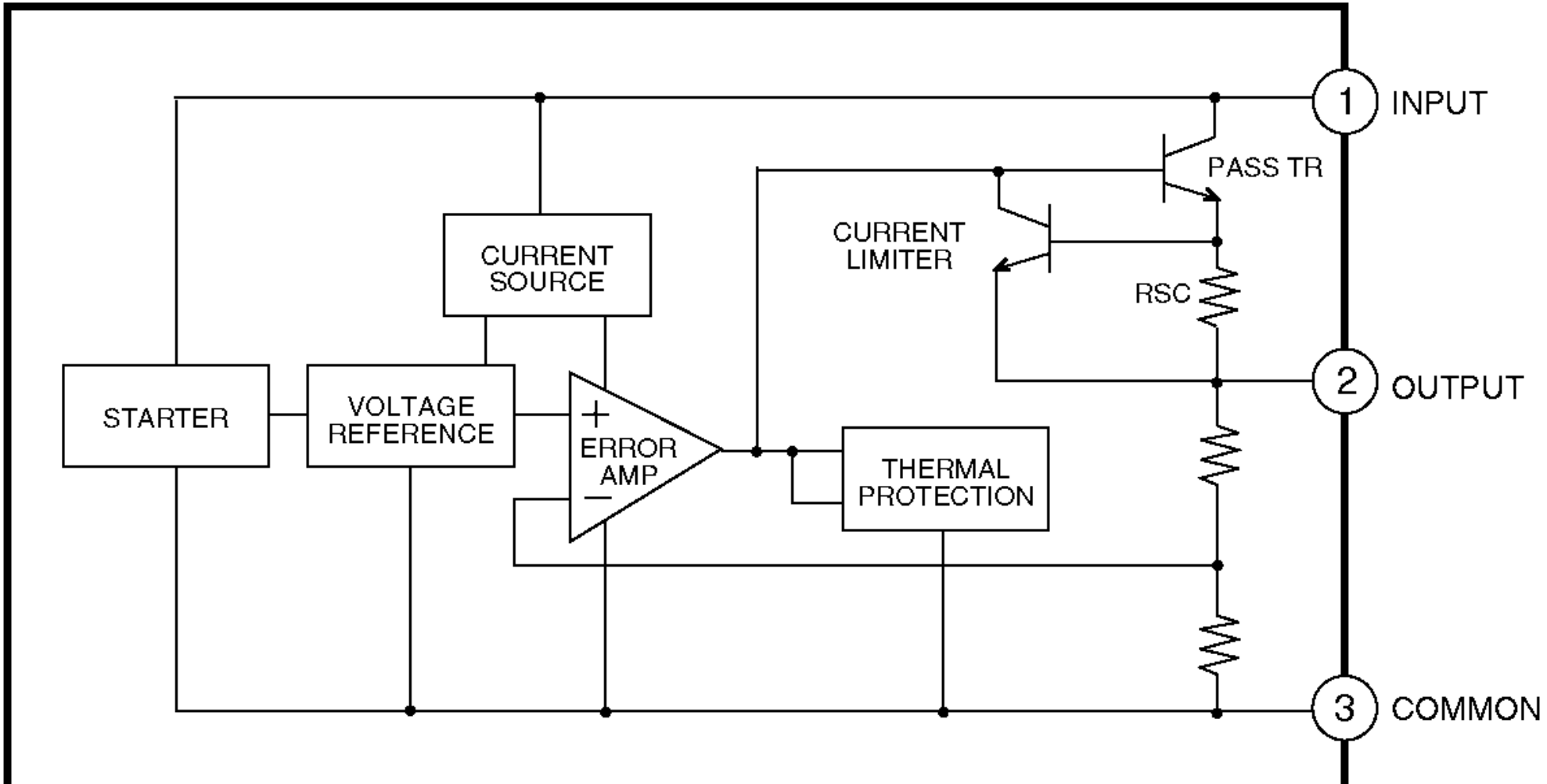
1
INPUT
PASS TR
CURRENT
LIMITER
CURRENT
SOURCE
RSC
2
OUTPUT
STARTER
VOLTAGE
REFERENCE
+
ERROR
AMP
−
THERMAL
PROTECTION
3
COMMON

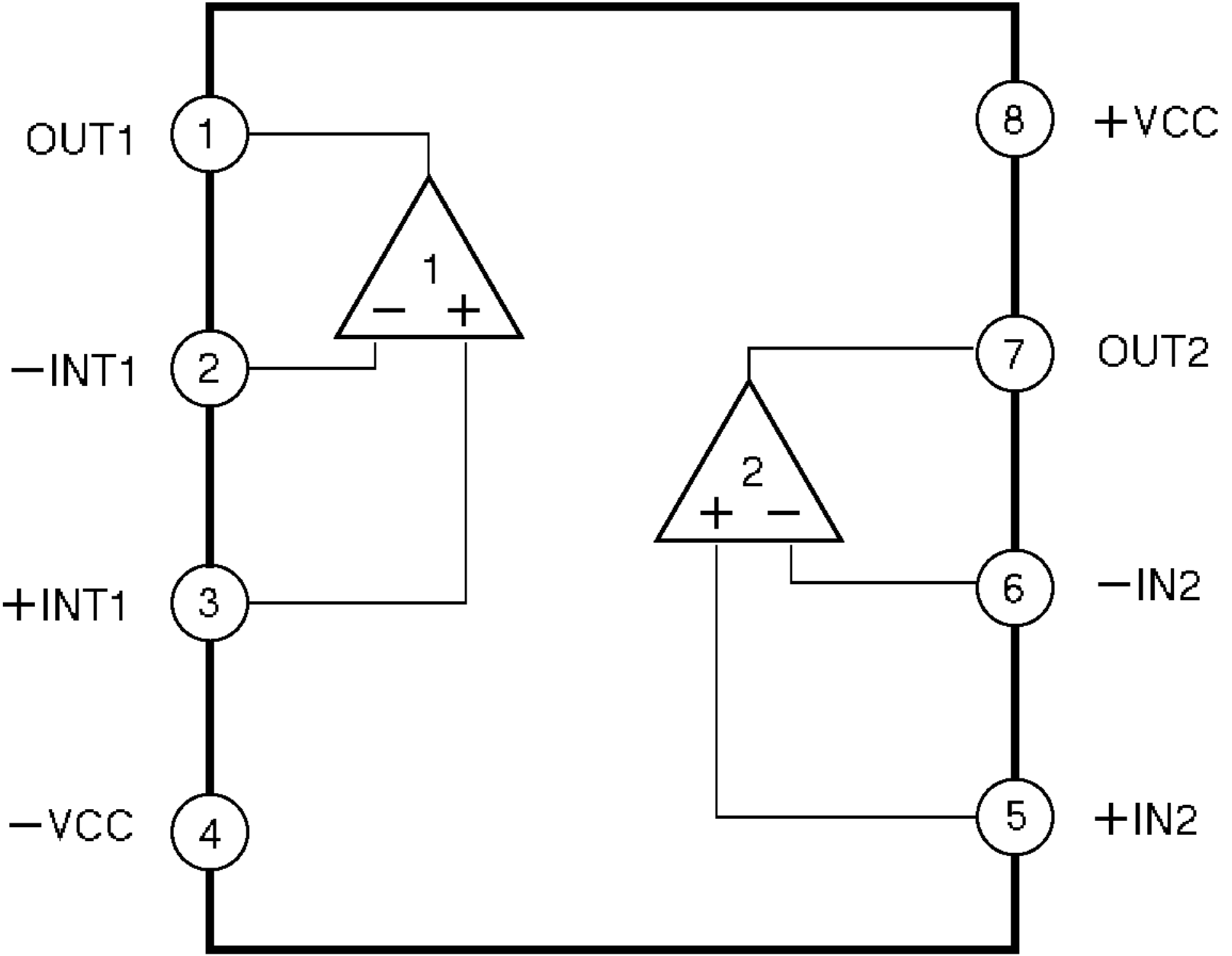
OUT1
1
−INT1
2
+INT1
3
−VCC
4
8
+VCC
7
OUT2
6
−IN2
5
+IN2
1
2

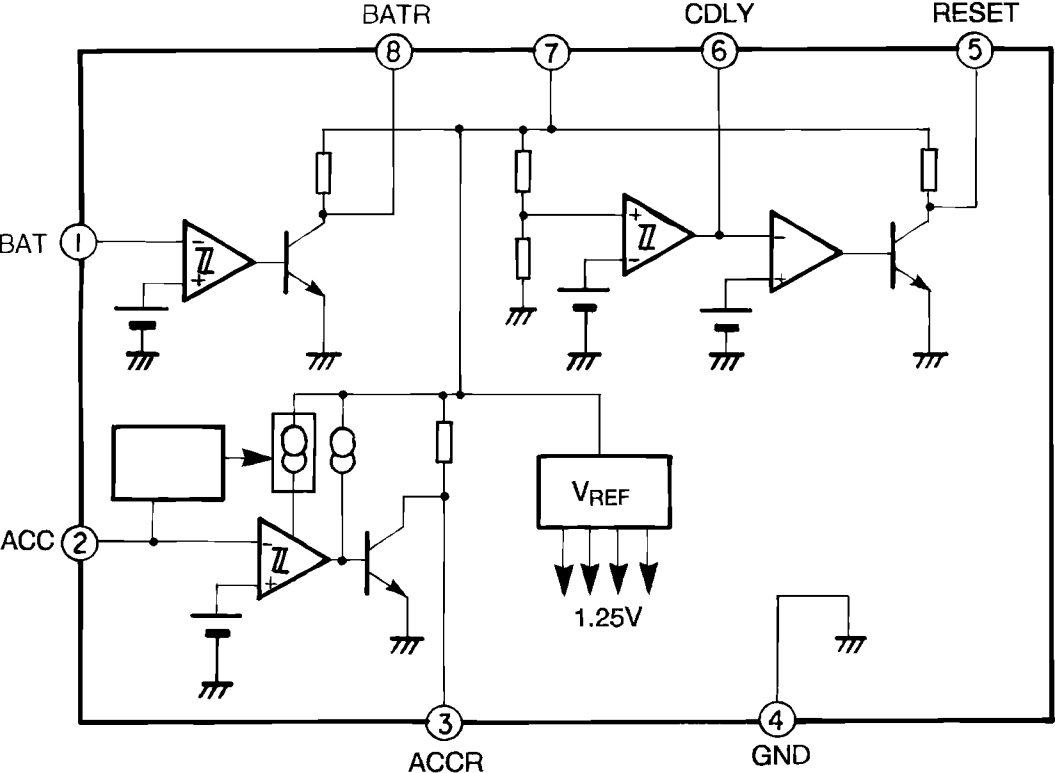
BATR
CDLY
RESET
8
7
6
5
BAT
1
ACC
2
VREF
1.25V
3
4
ACCR
GND

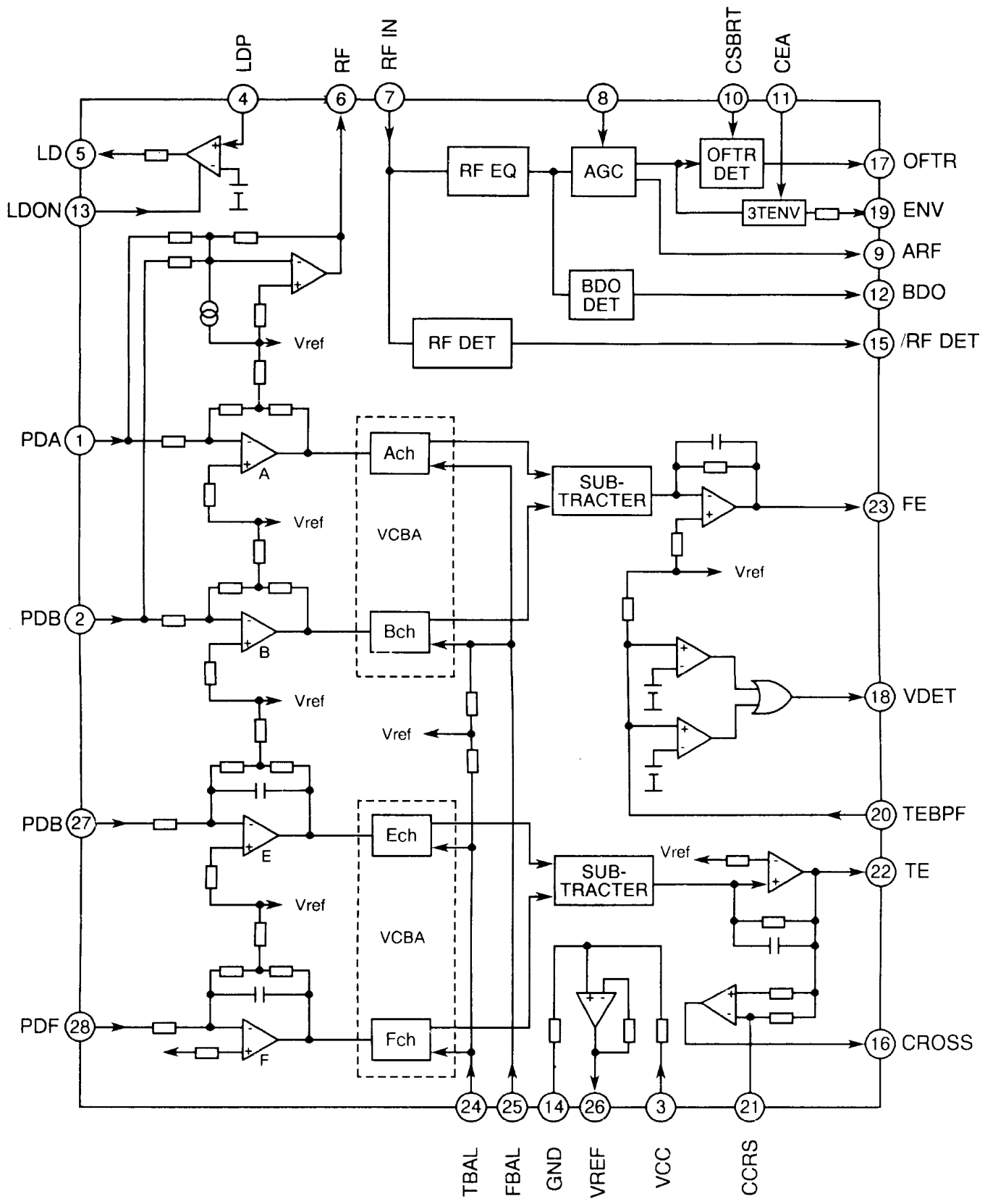
LDP
RF
RF IN
CSBRT
CEA
LD
LDON
RF EQ
AGC
OFTR DET
3TENV
OFTR
ENV
ARF
BDO DET
BDO
RF DET
/RF DET
Vref
PDA
A
Ach
VCBA
SUB-TRACTER
FE
PDB
B
Bch
VDET
TEBPF
PDB
E
Ech
TE
PDF
F
Fch
CROSS
TBAL
FBAL
GND
VREF
VCC
CCRS

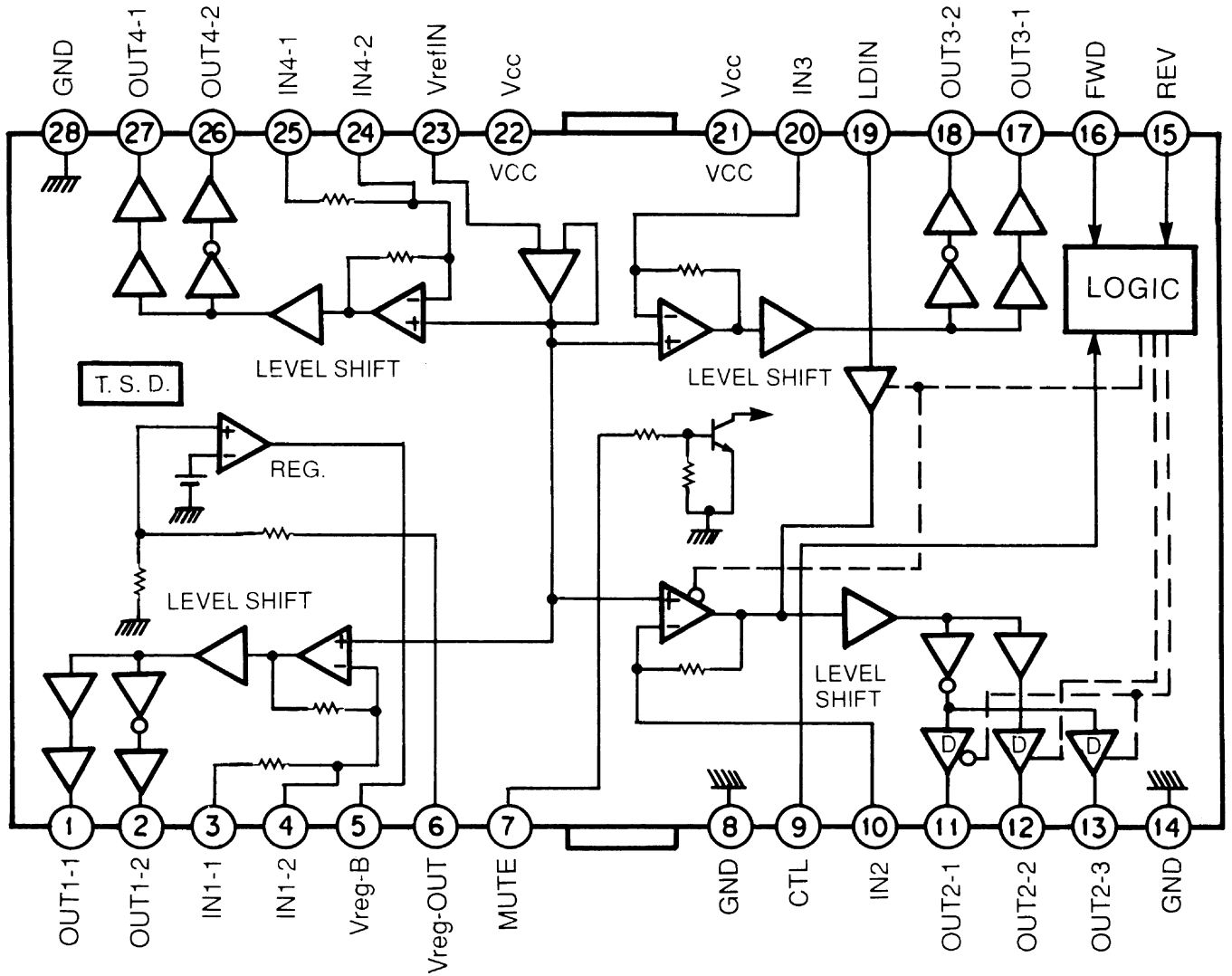
GND
OUT4-1
OUT4-2
IN4-1
IN4-2
VrefIN
Vcc
Vcc
IN3
LDIN
OUT3-2
OUT3-1
FWD
REV
28
27
26
25
24
23
22
21
20
19
18
17
16
15
VCC
VCC
LOGIC
LEVEL SHIFT
LEVEL SHIFT
T. S. D.
REG.
LEVEL SHIFT
LEVEL SHIFT
D
D
D
1
2
3
4
5
6
7
8
9
10
11
12
13
14
OUT1-1
OUT1-2
IN1-1
IN1-2
Vreg-B
Vreg-OUT
MUTE
GND
CTL
IN2
OUT2-1
OUT2-2
OUT2-3
GND

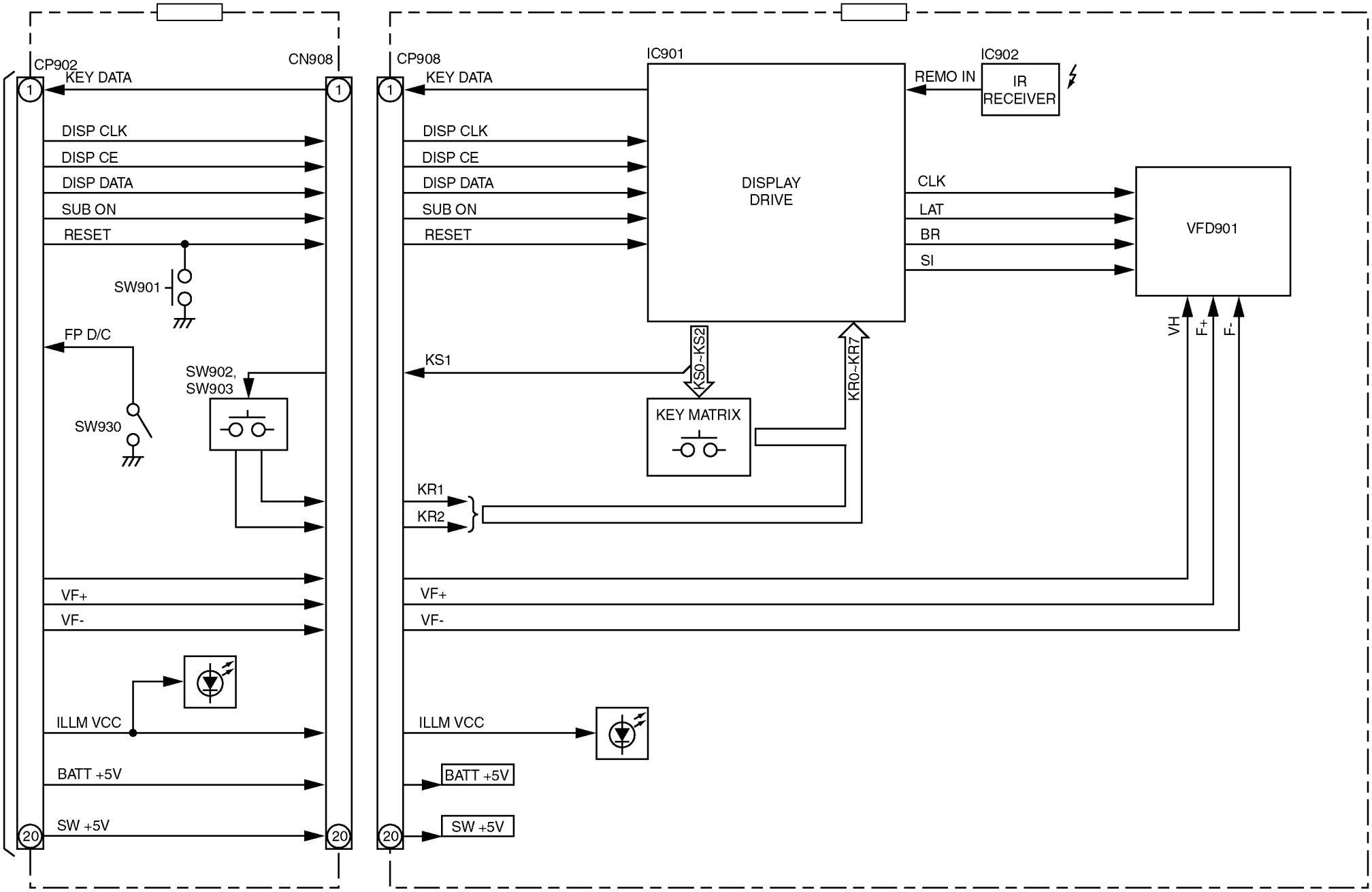
CP902
CN908
KEY DATA
DISP CLK
DISP CE
DISP DATA
SUB ON
RESET
SW901
FP D/C
SW902,
SW903
SW930
VF+
VF-
ILLM VCC
BATT +5V
SW +5V
CP908
IC901
IC902
REMO IN
IR
RECEIVER
DISPLAY
DRIVE
CLK
LAT
BR
SI
VFD901
VH
F+
F-
KS1
KS0~KS2
KR0~KR7
KEY MATRIX
KR1
KR2

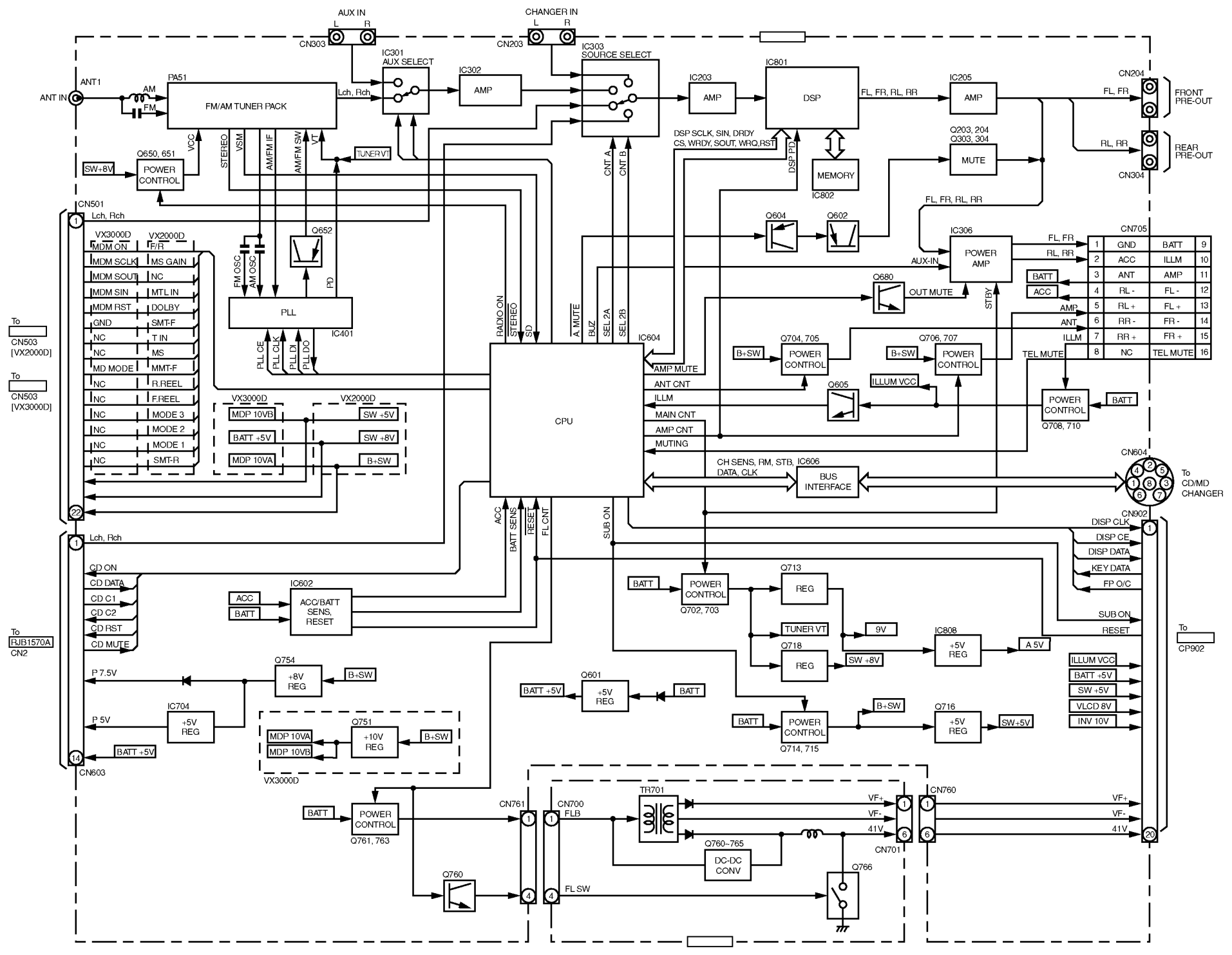
AUX IN
L R
CN303
CHANGER IN
L R
CN203
ANT IN
ANT1
AM
FM
PA51
FM/AM TUNER PACK
Lch, Rch
IC301
AUX SELECT
IC302
AMP
IC303
SOURCE SELECT
IC203
AMP
IC801
DSP
FL, FR, RL, RR
IC205
AMP
CN204
FL, FR
FRONT PRE-OUT
RL, RR
REAR PRE-OUT
CN304
Q203, 204
Q303, 304
MUTE
MEMORY
IC802
DSP SCLK, SIN, DRDY
CS, WRDY, SOUT, WRQ,RST
DSP PD
CNT A
CNT B
VCC
STEREO
VSM
AM/FM IF
AM/FM SW
VT
TUNER VT
SW+8V
Q650, 651
POWER CONTROL
CN501
Lch, Rch
VX3000D
MDM ON
MDM SCLK
MDM SOUT
MDM SIN
MDM RST
GND
NC
NC
MD MODE
NC
NC
NC
NC
NC
VX2000D
F/R
MS GAIN
NC
MTL IN
DOLBY
SMT-F
T IN
MS
MMT-F
R.REEL
F.REEL
MODE 3
MODE 2
MODE 1
SMT-R
Q652
FM OSC
AM OSC
PD
PLL
IC401
PLL CE
PLL CLK
PLL DI
PLL DO
RADIO ON
STEREO
SD
A MUTE
BUZ
SEL 2A
SEL 2B
IC604
CPU
AMP MUTE
ANT CNT
ILLM
MAIN CNT
AMP CNT
MUTING
Q604
Q602
IC306
POWER AMP
AUX-IN
FL, FR
RL, RR
Q680
OUT MUTE
STBY
CN705
GND
ACC
RL -
RL +
RR -
RR +
NC
BATT
ILLM
FL -
FL +
FR -
FR +
TEL MUTE
AMP
ANT
Q704, 705
POWER CONTROL
B+SW
Q706, 707
POWER CONTROL
ILLUM VCC
Q605
POWER CONTROL
Q708, 710
BATT
To CN503 [VX2000D]
To CN503 [VX3000D]
VX3000D
MDP 10VB
BATT +5V
MDP 10VA
VX2000D
SW +5V
SW +8V
B+SW
CH SENS, RM, STB, DATA, CLK
IC606
BUS INTERFACE
CN604
To CD/MD CHANGER
ACC
BATT SENS
RESET
FL CNT
SUB ON
CN902
DISP CLK
DISP CE
DISP DATA
KEY DATA
FP O/C
SUB ON
RESET
To CP902
Lch, Rch
CD ON
CD DATA
CD C1
CD C2
CD RST
CD MUTE
To RJB1570A CN2
IC602
ACC/BATT SENS, RESET
ACC
BATT
BATT
POWER CONTROL
Q702, 703
Q713
REG
TUNER VT
9V
Q718
REG
SW +8V
IC808
+5V REG
A 5V
ILLUM VCC
BATT +5V
SW +5V
VLCD 8V
INV 10V
P 7.5V
Q754
+8V REG
B+SW
BATT +5V
Q601
+5V REG
BATT
P 5V
IC704
+5V REG
Q751
+10V REG
MDP 10VA
MDP 10VB
B+SW
VX3000D
BATT +5V
CN603
BATT
POWER CONTROL
Q714, 715
B+SW
Q716
+5V REG
SW+5V
BATT
POWER CONTROL
Q761, 763
CN761
CN700
FLB
TR701
VF+
VF-
41V
CN701
CN760
Q760~765
DC-DC CONV
Q766
Q760
FL SW

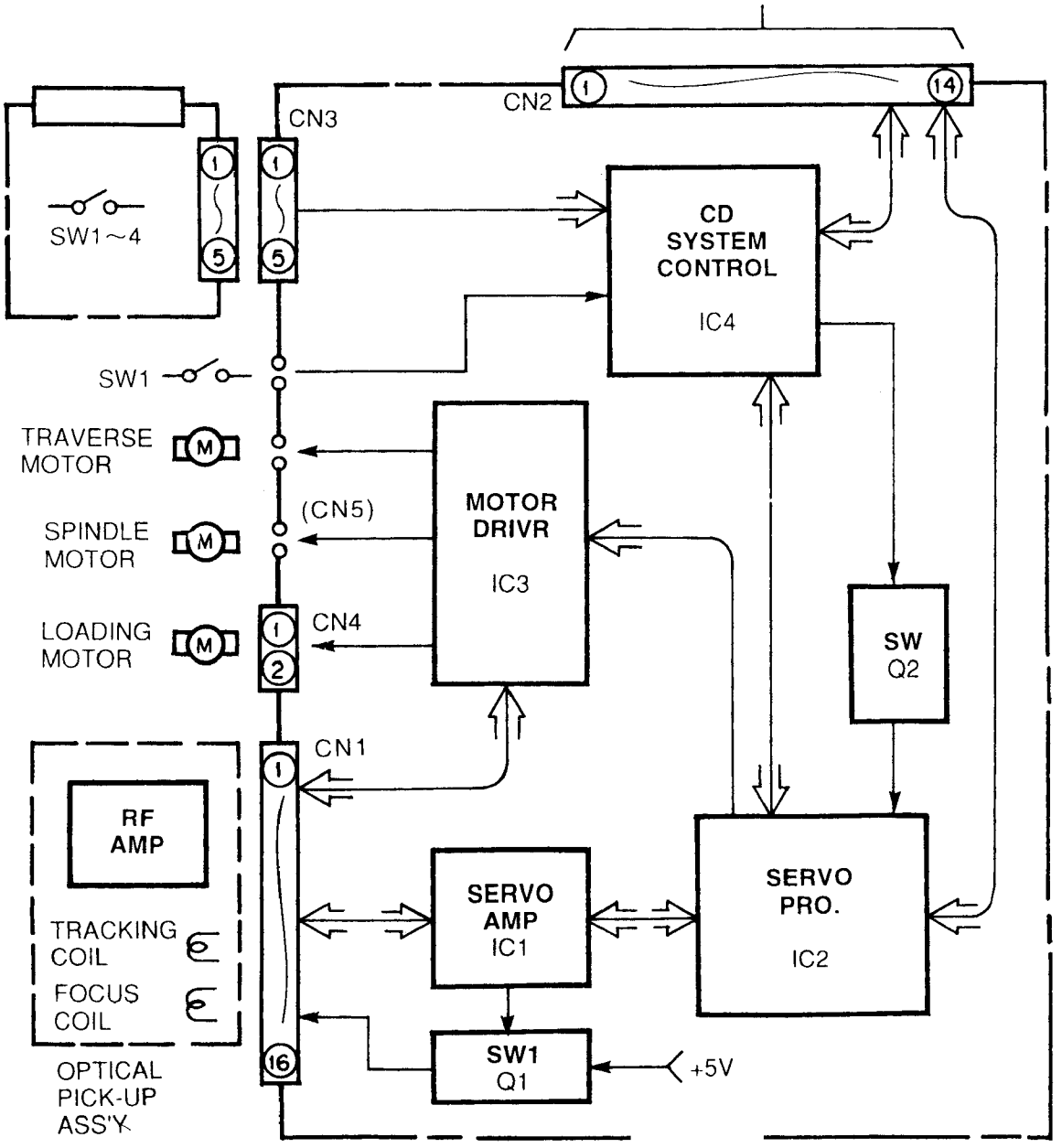
CN2
1
14
CN3
1
5
SW1~4
CD
SYSTEM
CONTROL
IC4
SW1
TRAVERSE
MOTOR
M
(CN5)
SPINDLE
MOTOR
M
MOTOR
DRIVR
IC3
LOADING
MOTOR
M
CN4
1
2
SW
Q2
CN1
1
RF
AMP
TRACKING
COIL
FOCUS
COIL
SERVO
AMP
IC1
SERVO
PRO.
IC2
16
SW1
Q1
+5V
OPTICAL
PICK-UP
ASS'Y

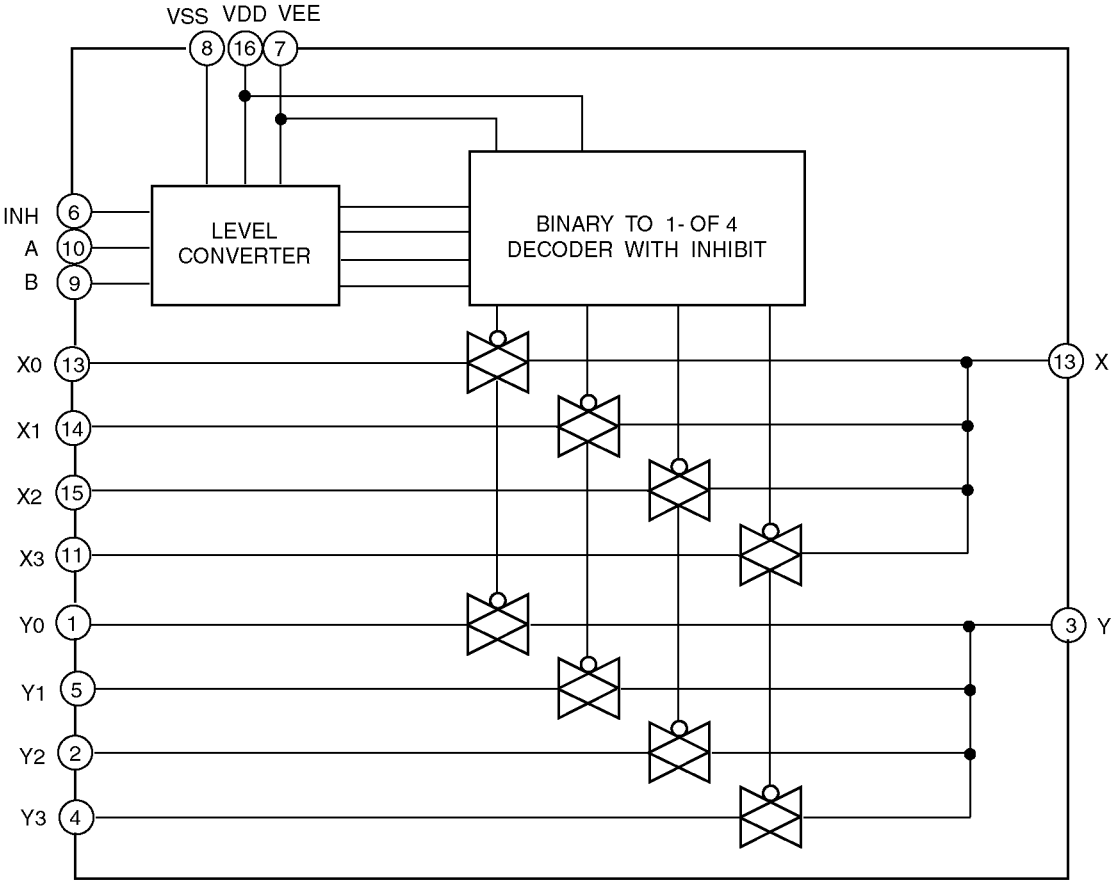
VSS
VDD
VEE
8
16
7
INH
A
B
6
10
9
LEVEL CONVERTER
BINARY TO 1-OF 4 DECODER WITH INHIBIT
X0
X1
X2
X3
Y0
Y1
Y2
Y3
13
14
15
11
1
5
2
4
13
X
3
Y

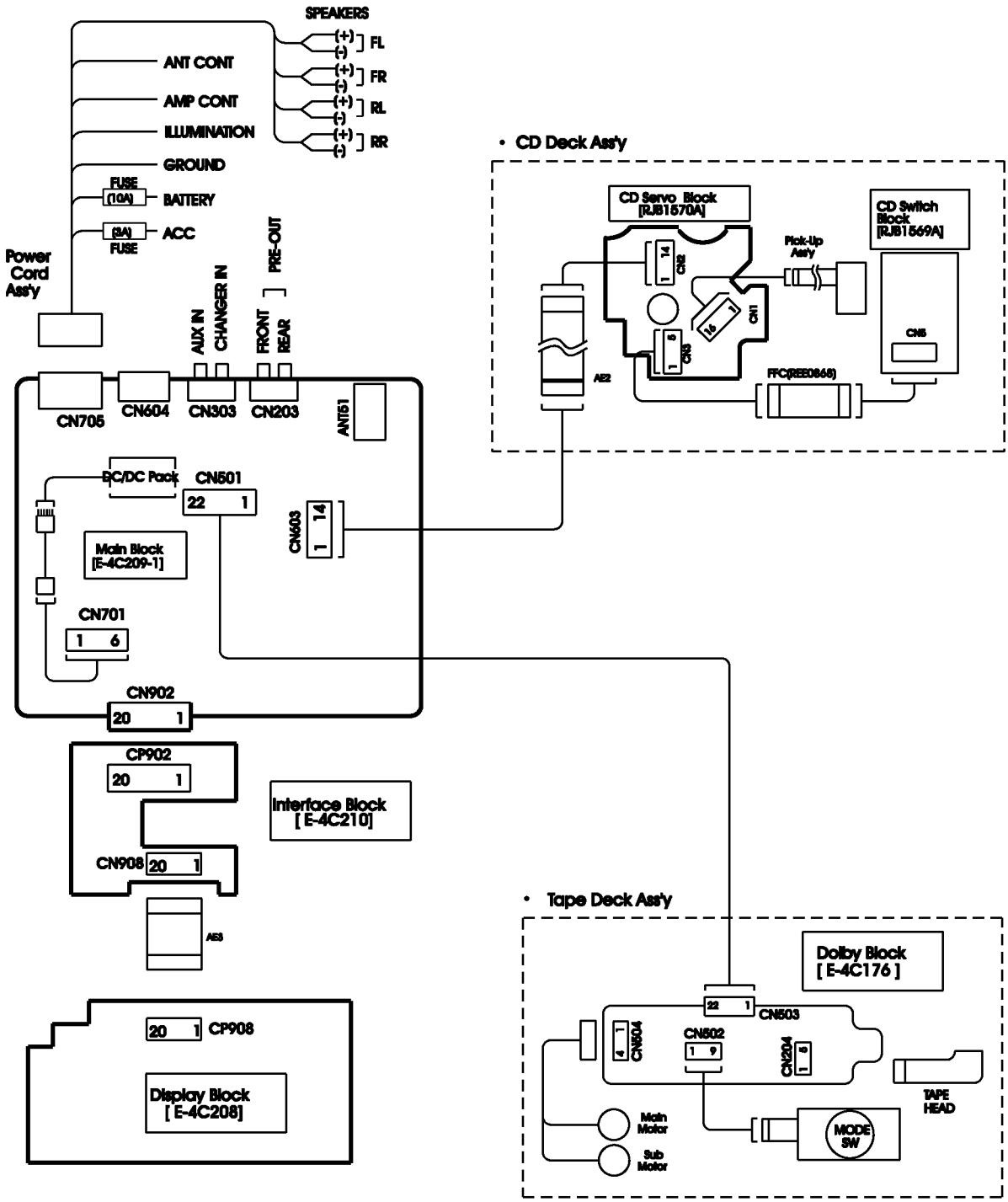
SPEAKERS
(+)
(-)
FL
FR
RL
RR
ANT CONT
AMP CONT
ILLUMINATION
GROUND
FUSE
(10A)
BATTERY
(3A)
FUSE
ACC
Power Cord Ass'y
AUX IN
CHANGER IN
PRE-OUT
FRONT
REAR
CN705
CN604
CN303
CN203
ANT51
DC/DC Pack
CN501
22
1
CN603
14
1
Main Block [E-4C209-1]
CN701
1
6
CN902
20
1
CP902
20
1
Interface Block [E-4C210]
CN908
20
1
AE3
20
1
CP908
Display Block [E-4C208]
• CD Deck Ass'y
CD Servo Block [RJB1570A]
CN2
14
1
CN1
16
1
CN3
9
1
Pick-Up Ass'y
CD Switch Block [RJB1569A]
CN5
AE2
FFC(REE0868)
• Tape Deck Ass'y
Dolby Block [E-4C176]
22
1
CN503
CN504
4
1
CN502
1
9
CN204
10
1
TAPE HEAD
Main Motor
Sub Motor
MODE SW

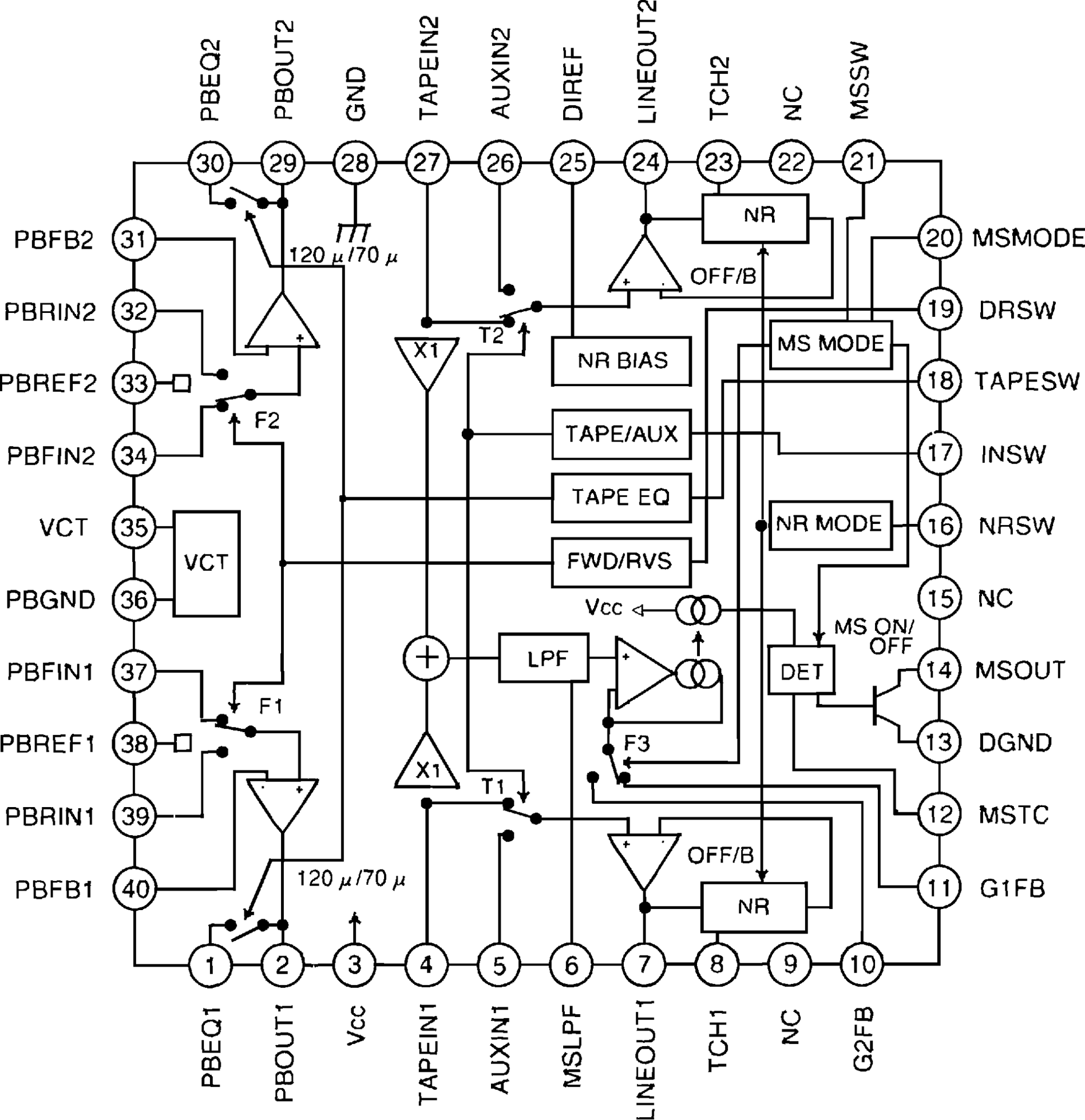
PBEQ2
PBOUT2
GND
TAPEIN2
AUXIN2
DIREF
LINEOUT2
TCH2
NC
MSSW
PBFB2
PBRIN2
PBREF2
PBFIN2
VCT
PBGND
PBFIN1
PBREF1
PBRIN1
PBFB1
MSMODE
DRSW
TAPESW
INSW
NRSW
NC
MSOUT
DGND
MSTC
G1FB
PBEQ1
PBOUT1
Vcc
TAPEIN1
AUXIN1
MSLPF
LINEOUT1
TCH1
NC
G2FB
120 μ/70 μ
F2
F1
F3
T1
T2
X1
X1
NR
OFF/B
NR BIAS
MS MODE
TAPE/AUX
TAPE EQ
NR MODE
FWD/RVS
VCT
Vcc
LPF
MS ON/
OFF
DET
OFF/B
NR
120 μ/70 μ

■ Numbers in ◯ are indicate REF.No. in the REPLACEMENT PARTS LIST

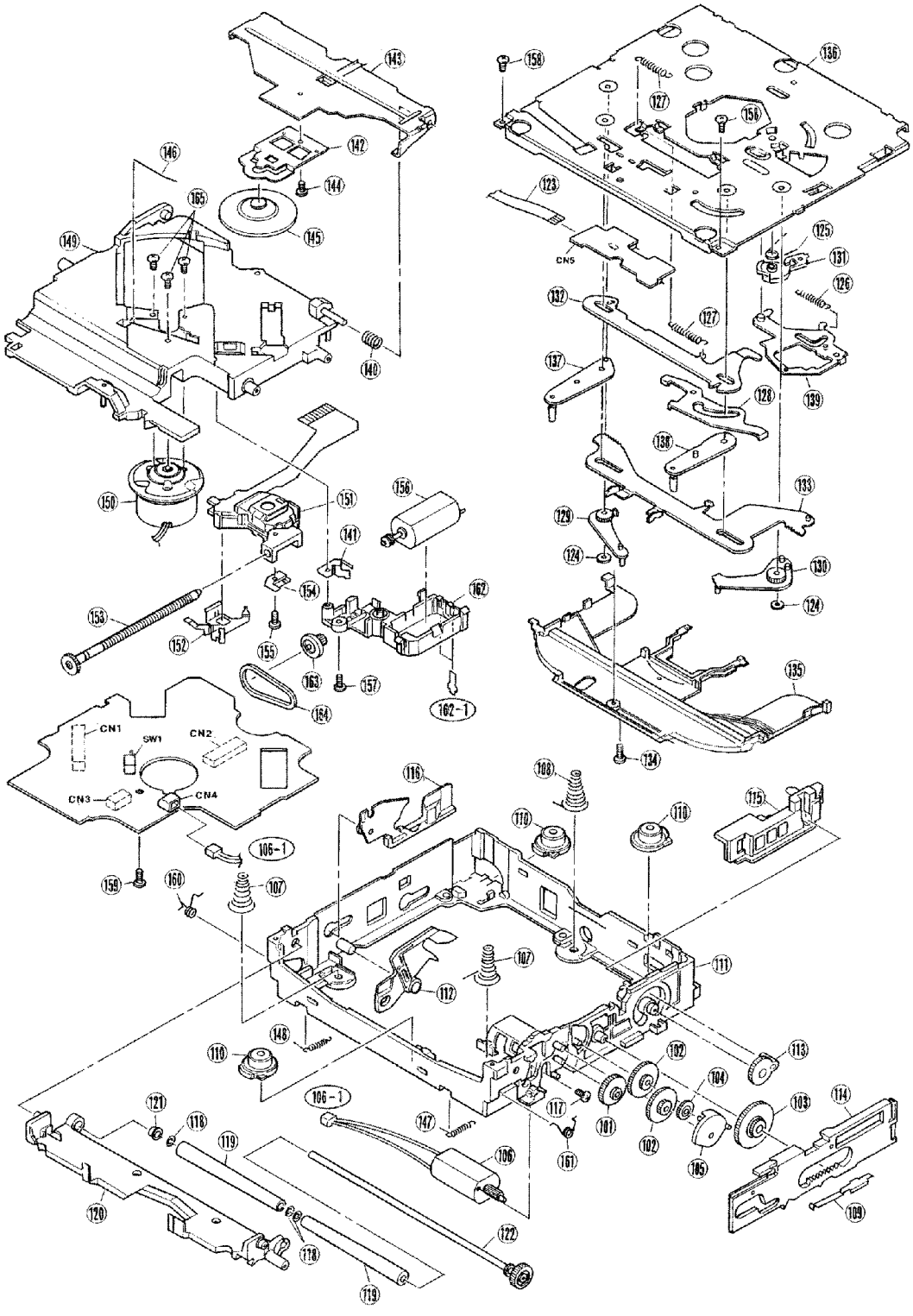

RAJ2713
'00.09.28

A | B | C

■ Numbers in ○ are indicated REF.No.in the REPLACEMENT PARTS LIST

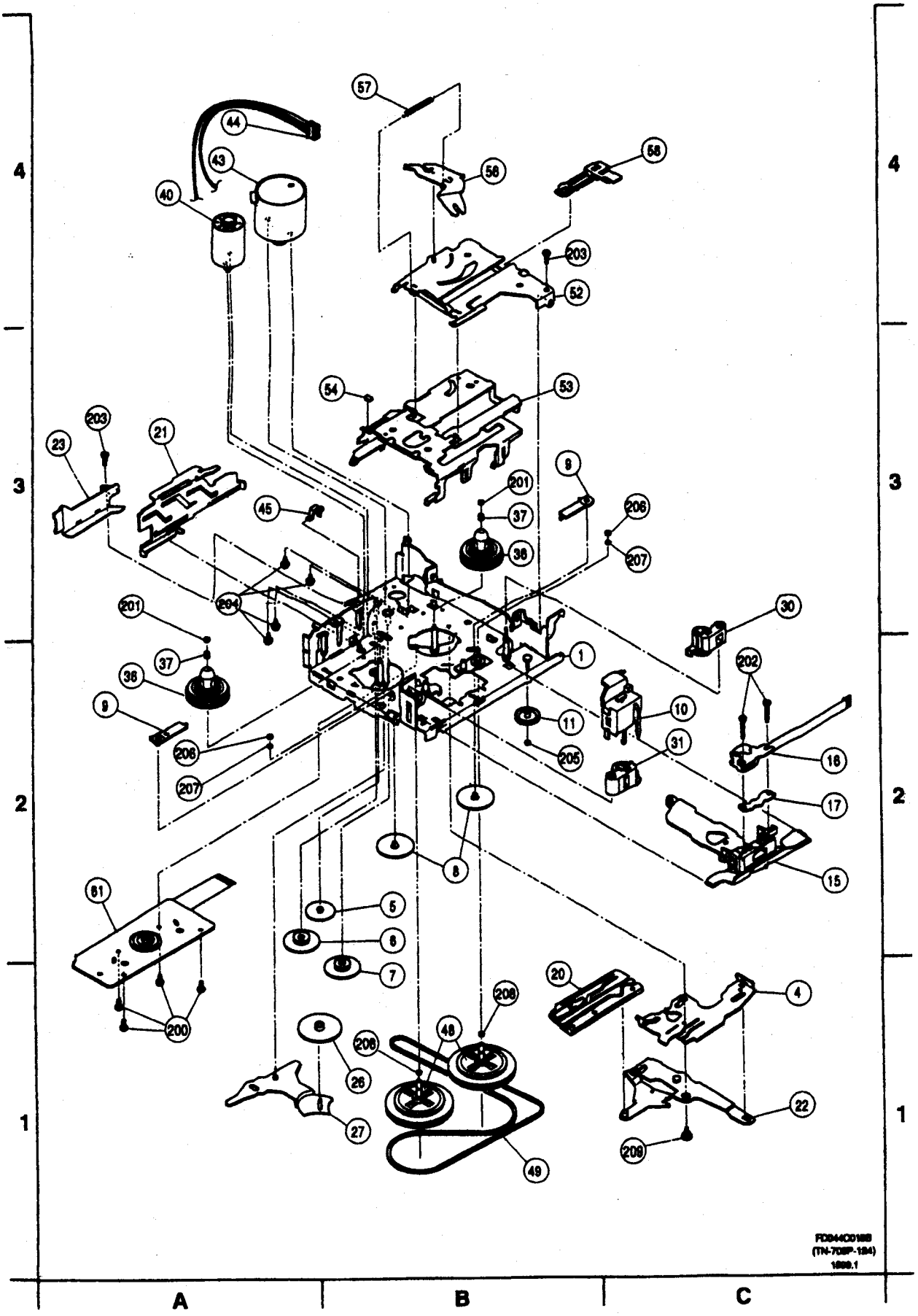

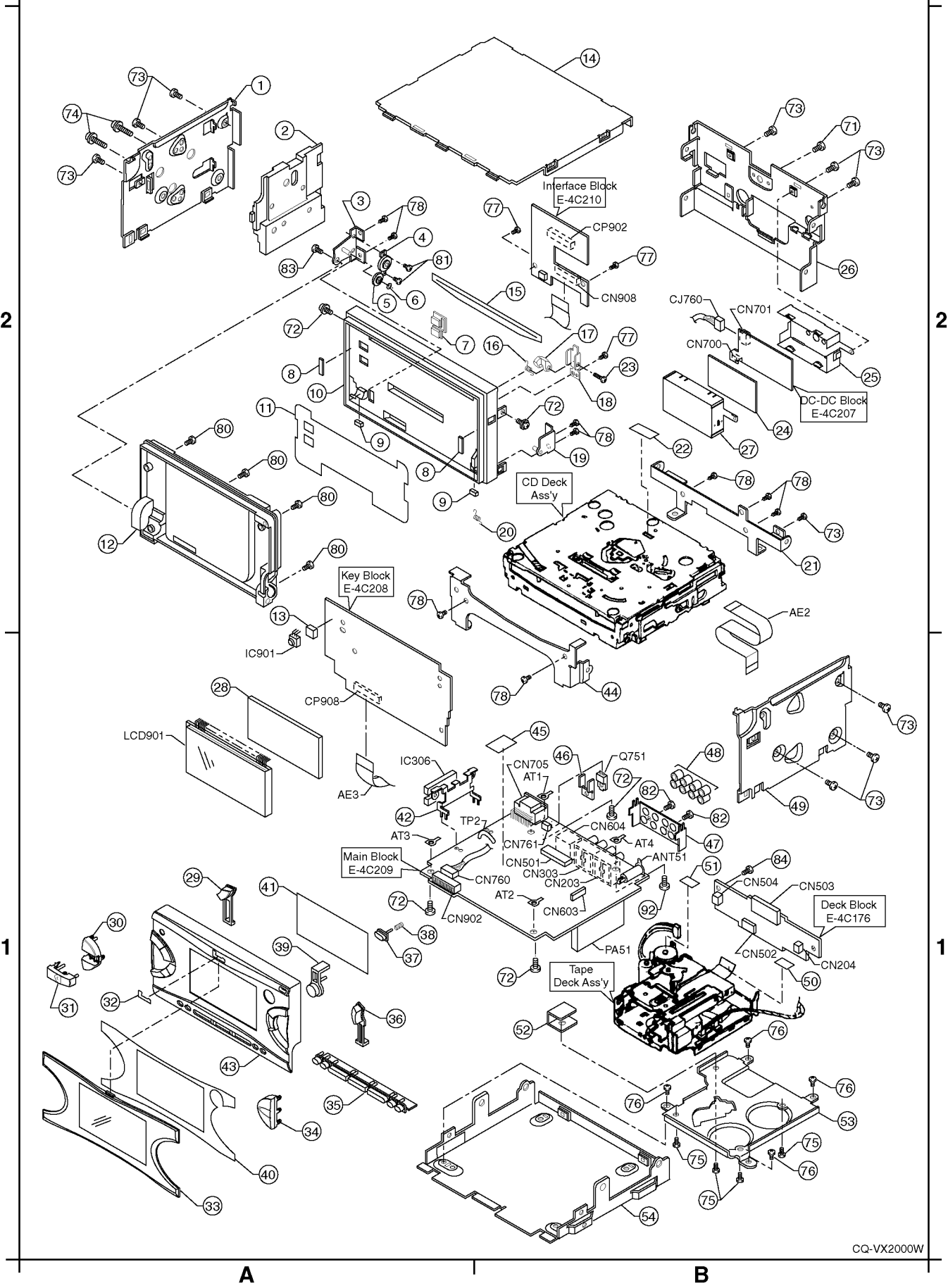
Interface Block
E-4C210
CP902
CN908
CJ760
CN701
CN700
DC-DC Block
E-4C207
CD Deck
Ass'y
Key Block
E-4C208
IC901
CP908
LCD901
AE2
AE3
IC306
CN705
AT1
Q751
TP2
AT3
CN604
AT4
CN761
CN501
ANT51
CN303
CN203
Main Block
E-4C209
CN760
AT2
CN603
CN902
PA51
CN504
CN503
Deck Block
E-4C176
CN502
CN204
Tape
Deck Ass'y
CQ-VX2000W
A
B
1
2

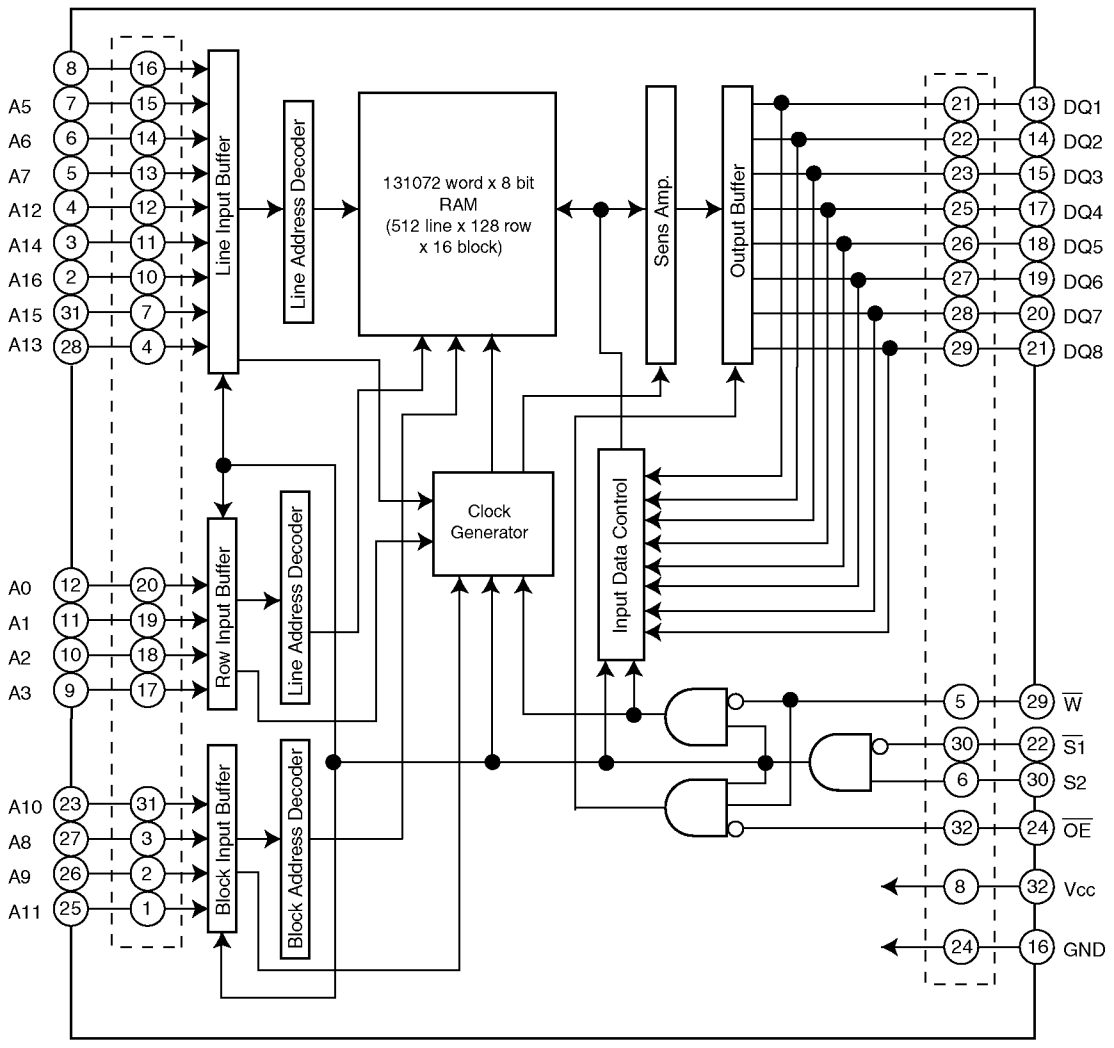
A5
A6
A7
A12
A14
A16
A15
A13
A0
A1
A2
A3
A10
A8
A9
A11
Line Input Buffer
Row Input Buffer
Block Input Buffer
Line Address Decoder
Line Address Decoder
Block Address Decoder
131072 word x 8 bit
RAM
(512 line x 128 row
x 16 block)
Clock
Generator
Sens Amp.
Output Buffer
Input Data Control
DQ1
DQ2
DQ3
DQ4
DQ5
DQ6
DQ7
DQ8
W
S1
S2
OE
Vcc
GND

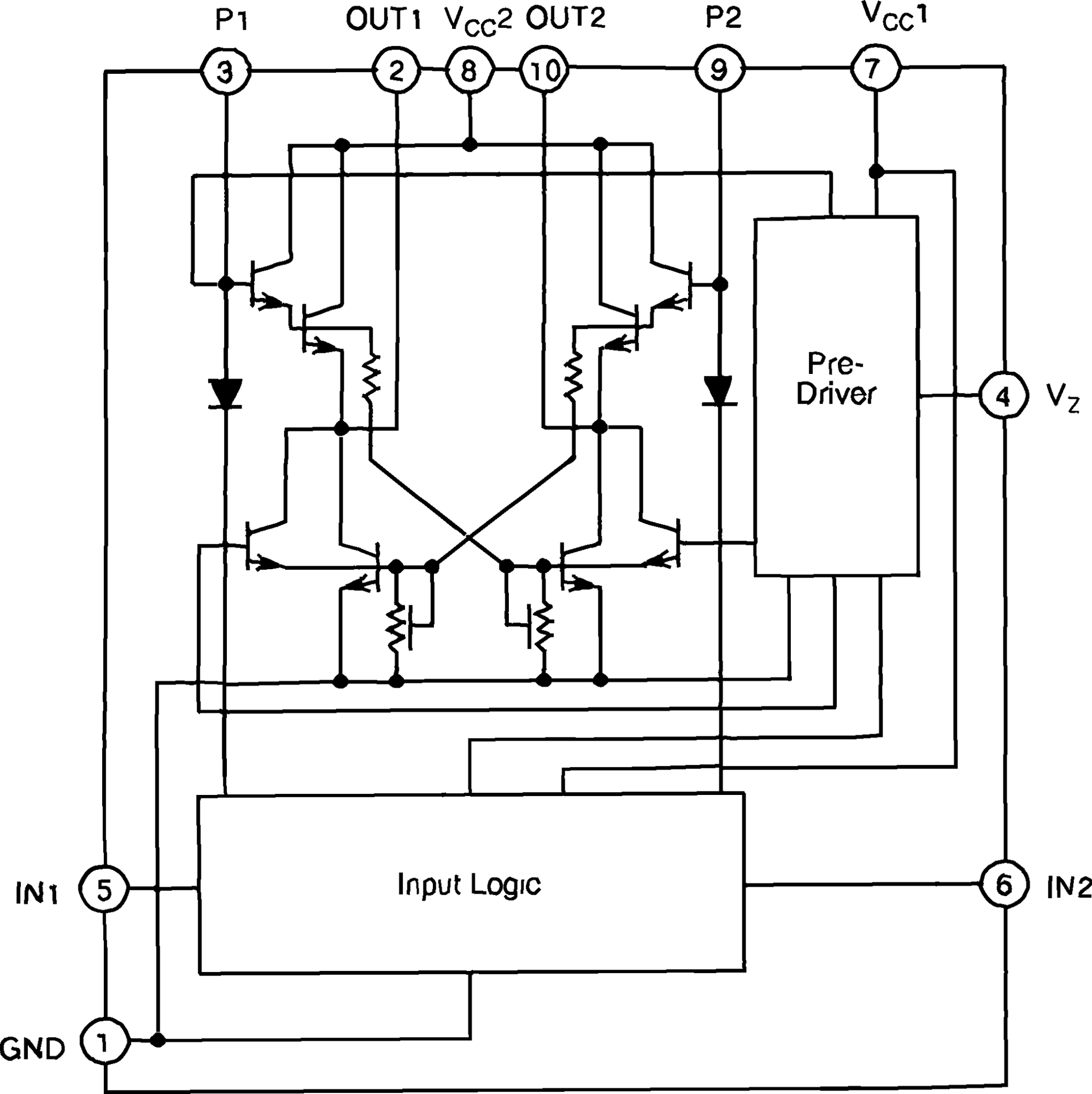
P1
OUT1
$V_{CC}2$
OUT2
P2
$V_{CC}1$
3
2
8
10
9
7
Pre-
Driver
4
V_Z
IN1
5
Input Logic
6
IN2
GND
1

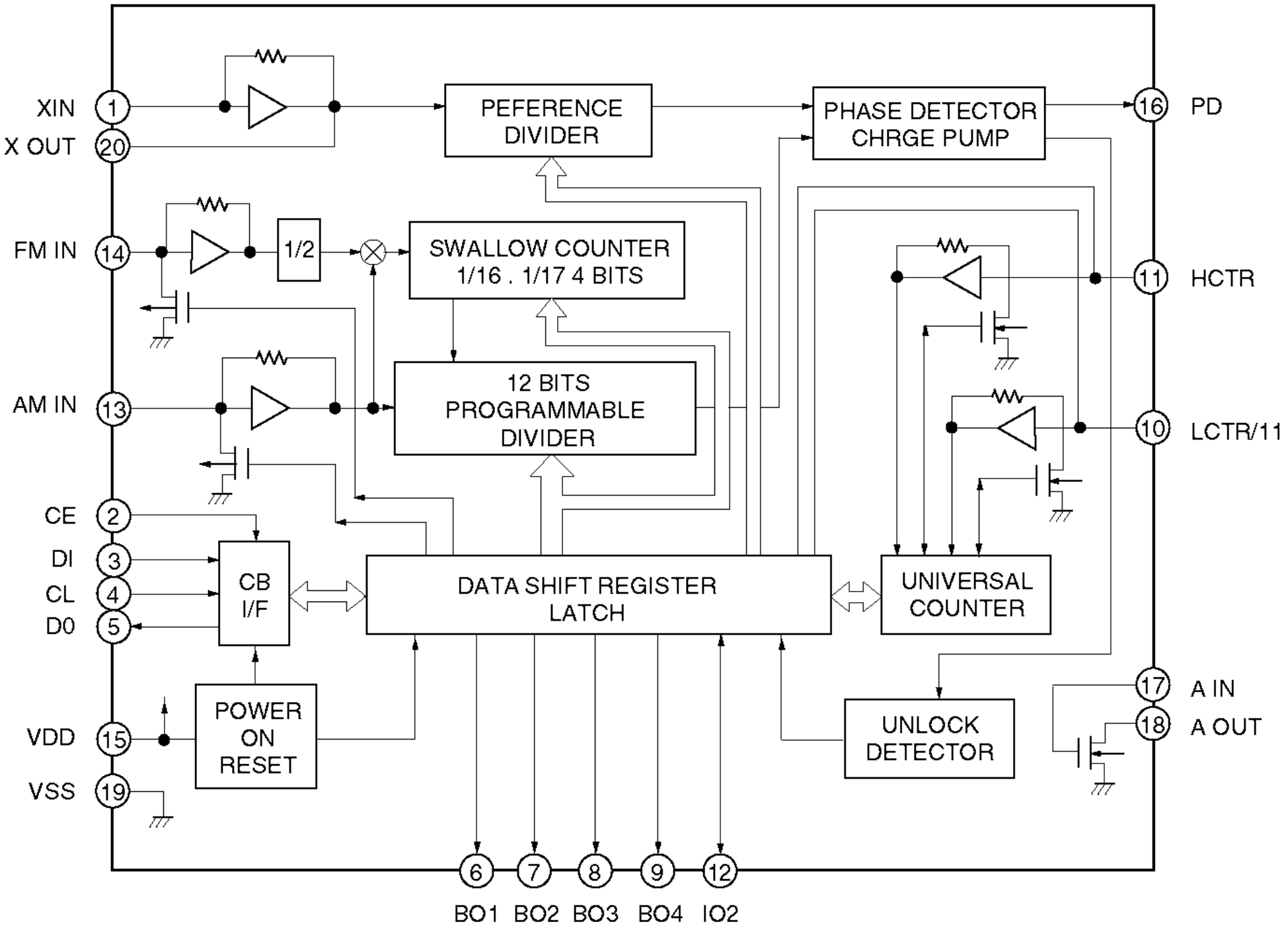
XIN
X OUT
FM IN
AM IN
CE
DI
CL
D0
VDD
VSS
PEFERENCE DIVIDER
PHASE DETECTOR CHRGE PUMP
PD
1/2
SWALLOW COUNTER 1/16 . 1/17 4 BITS
12 BITS PROGRAMMABLE DIVIDER
HCTR
LCTR/11
CB I/F
DATA SHIFT REGISTER LATCH
UNIVERSAL COUNTER
POWER ON RESET
UNLOCK DETECTOR
A IN
A OUT
BO1
BO2
BO3
BO4
IO2

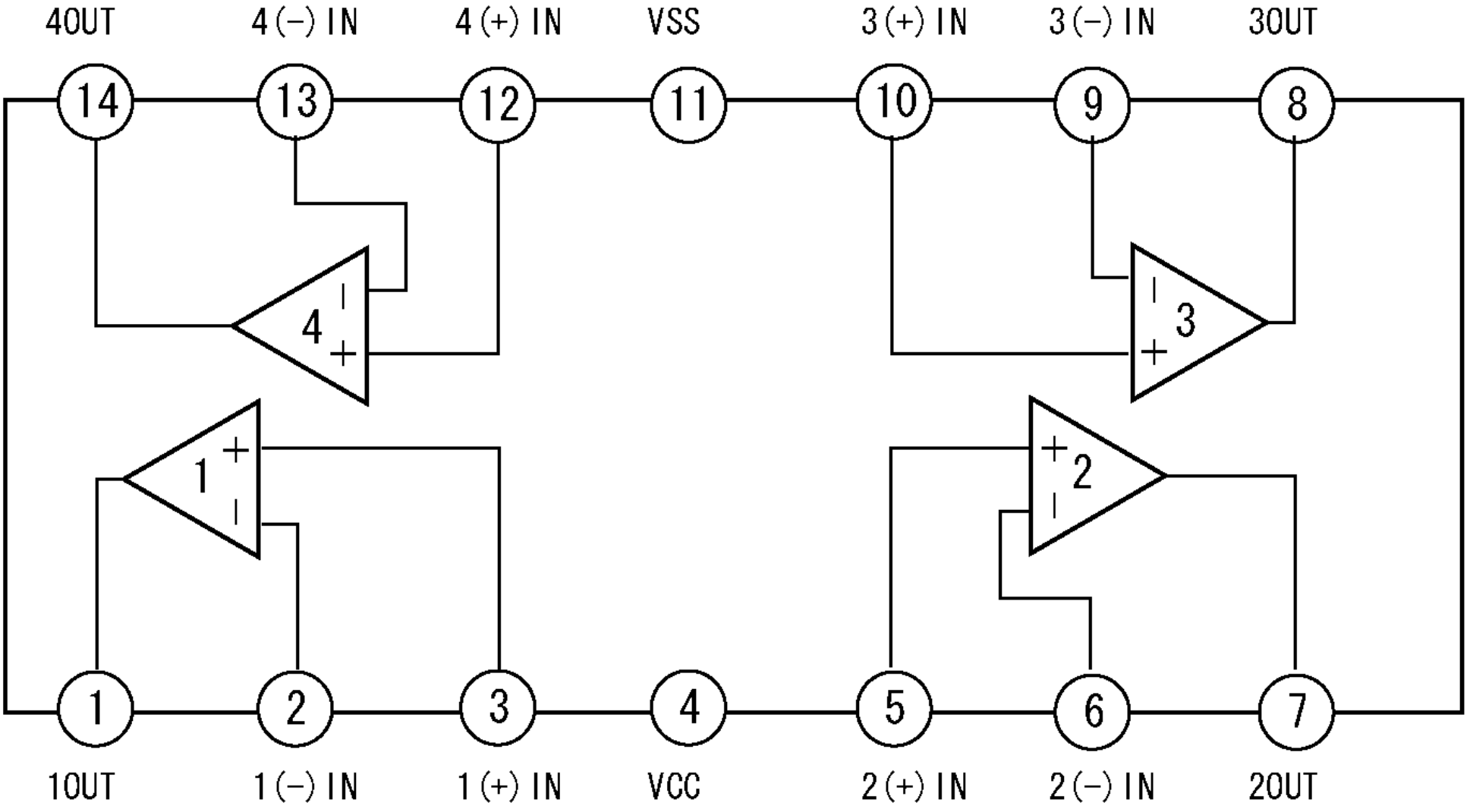
4OUT
4(−) IN
4(+) IN
VSS
3(+) IN
3(−) IN
3OUT
14
13
12
11
10
9
8
4
3
1
2
1
2
3
4
5
6
7
1OUT
1(−) IN
1(+) IN
VCC
2(+) IN
2(−) IN
2OUT

1 CD Player Parts

Note:

1. Be sure to make your orders of replacement parts according to this list.
2. Important safty notice: Component , indentified by ⚠ mark have special characteristics important for safety. when replacing any of these components, use only manufacturer's specified parts.
3. Location keys in the remarks column indicates the general location of the parts shown in the exploded drawing. as in a load map.
4. The marking (RTL) indicates that Retention Time is linited for this item. After the discontinuation of assembly in production, the item will continue to be availability is dependent on the type of assembly, and in accordance with the laws governing part and product retention. Aft the end of this period, the assembly will no longer be available.
5. "A" marks in remarks colum are indicated supply parts of Audio Division(AD) in Matsushita Electric Industrial Co., Ltd.(MEI)
6. "V" marks in remarks colum are indicated supply parts of Vidio System Division(VSD) in Matsushita Electric industrial Co., Ltd. (MEI)

Note:

1. Be sure to make your orders of replacement parts according to this list.
2. Important safty notice: Component , indentified by ⚠ mark have special characteristics important for safety. when replacing any of these components, use only manufacturer's specified parts.
3. Location keys in the remarks column indicates the general location of the parts shown in the exploded drawing. as in a load map.
4. "T" marks in remarks colum are indicated supply parts of TAMACO.

Note:

1. Be sure to make your orders of replacement parts according to this list.
2. Important safty notice: Component , indentified by ⚠ mark have special characteristics important for safety. when replacing any of these components, use only manufacturer's specified parts.
3. Location keys in the remarks column indicates the general location of the parts shown in the exploded drawing. as in a load map.
4. The marking (RTL) indicates that Retention Time is linited for this item. After the discontinuation of assembly in production, the item will continue to be availability is dependent on the type of assembly, and in accordance with the laws governing part and product retention. Aft the end of this period, the assembly will no longer be available.
5. "T" marks in remarks colum are indicated supply parts of TAMACO.

Note:

1. Be sure to make your orders of replacement parts according to this list.
2. Important safty notice: Component , indentified by ⚠ mark have special characteristics important for safety. when replacing any of these components, use only manufacturer's specified parts.
3. Location keys in the remarks column indicates the general location of the parts shown in the exploded drawing. as in a load map.
4. "T" marks in remarks colum are indicated supply parts of TAMACO.

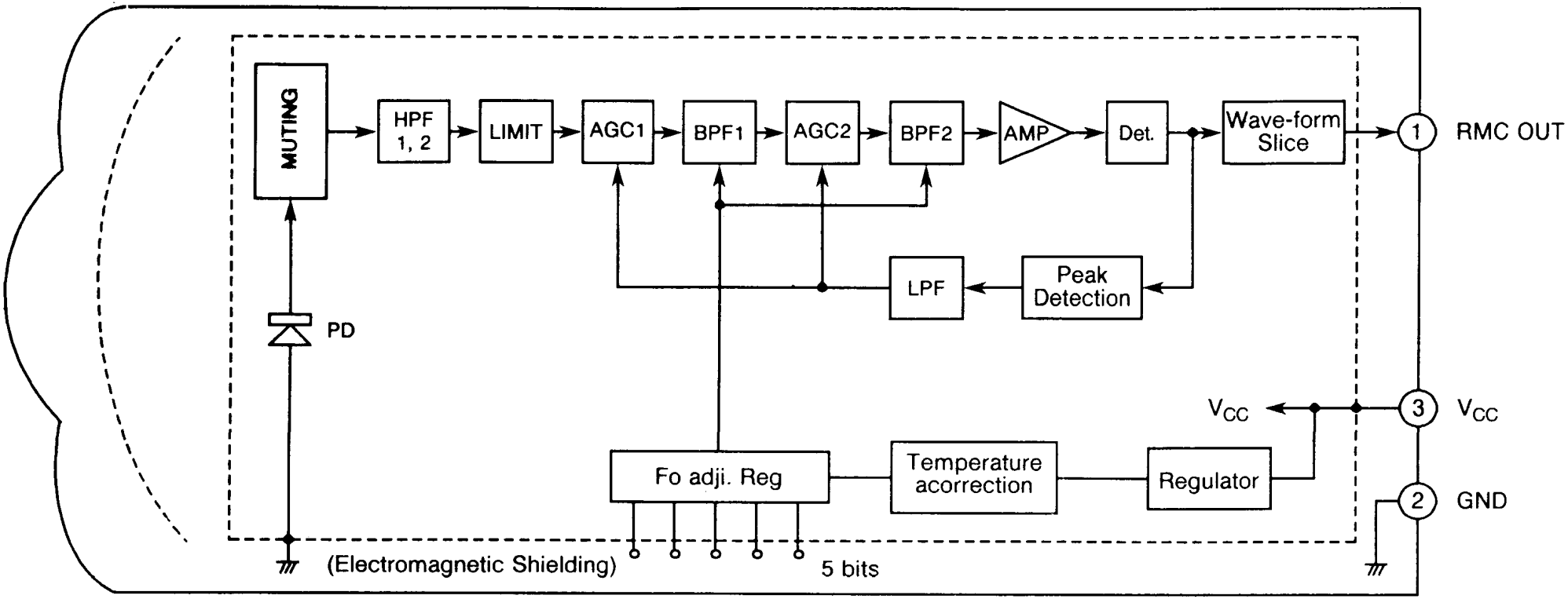
MUTING
HPF 1, 2
LIMIT
AGC1
BPF1
AGC2
BPF2
AMP
Det.
Wave-form Slice
1
RMC OUT
LPF
Peak Detection
PD
VCC
3
VCC
Fo adji. Reg
Temperature acorrection
Regulator
2
GND
(Electromagnetic Shielding)
5 bits

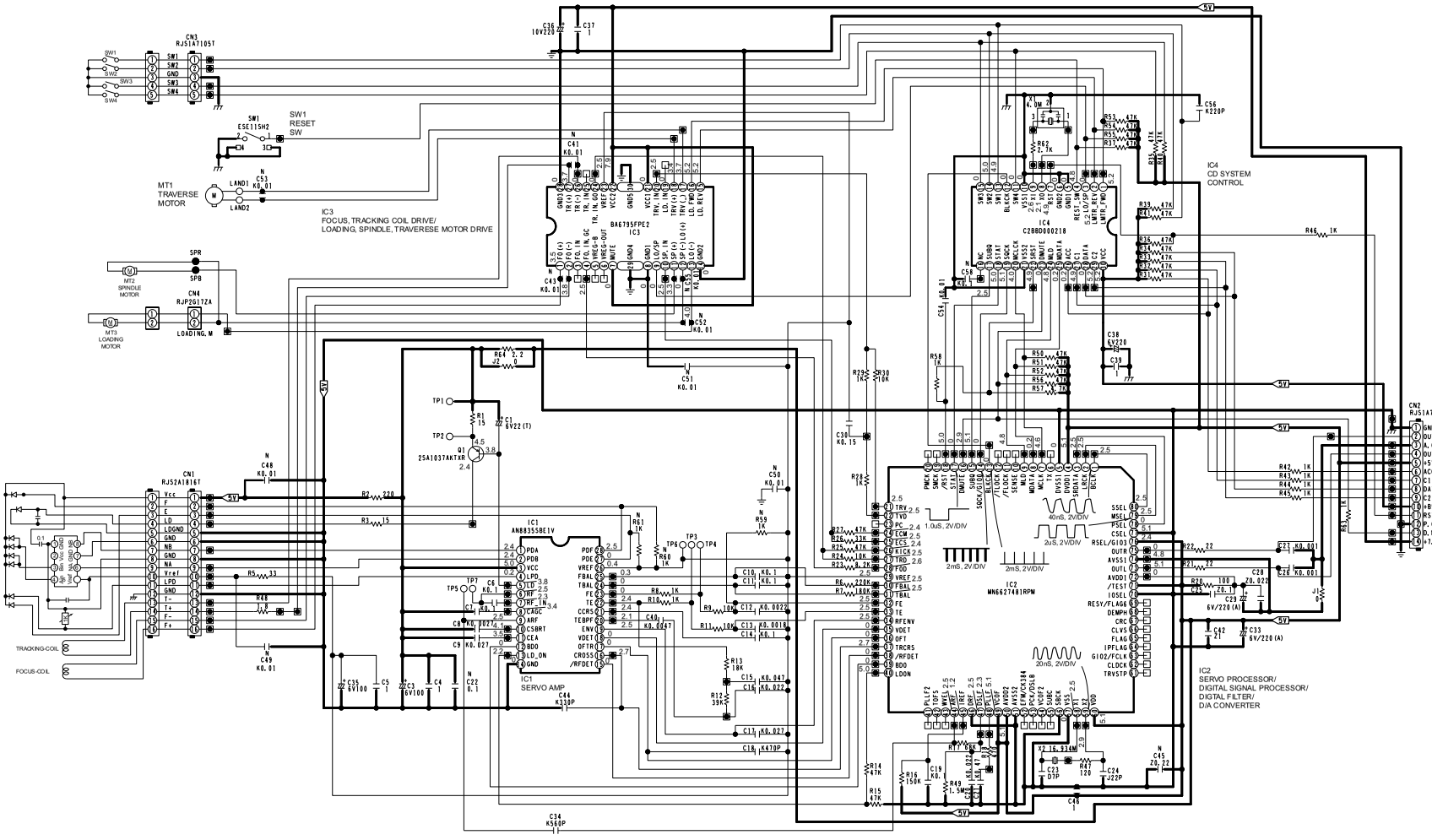
IC3
FOCUS, TRACKING COIL DRIVE/
LOADING, SPINDLE, TRAVERESE MOTOR DRIVE
IC4
CD SYSTEM
CONTROL
IC1
SERVO AMP
IC2
SERVO PROCESSOR/
DIGITAL SIGNAL PROCESSOR/
DIGTAL FILTER/
D/A CONVERTER
MT1
TRAVERSE
MOTOR
SW1
RESET
SW
MT2
SPINDLE
MOTOR
MT3
LOADING
MOTOR
TRACKING COIL
FOCUS COIL
CN1
CN2
CN3
CN4
BA6795FPE2
C28BD000218
AN8835SBE1V
MN627481RPM
25A1037AKT1R
40nS, 2V/DIV
2uS, 2V/DIV
2mS, 2V/DIV
20nS, 2V/DIV
1.0uS, 2V/DIV

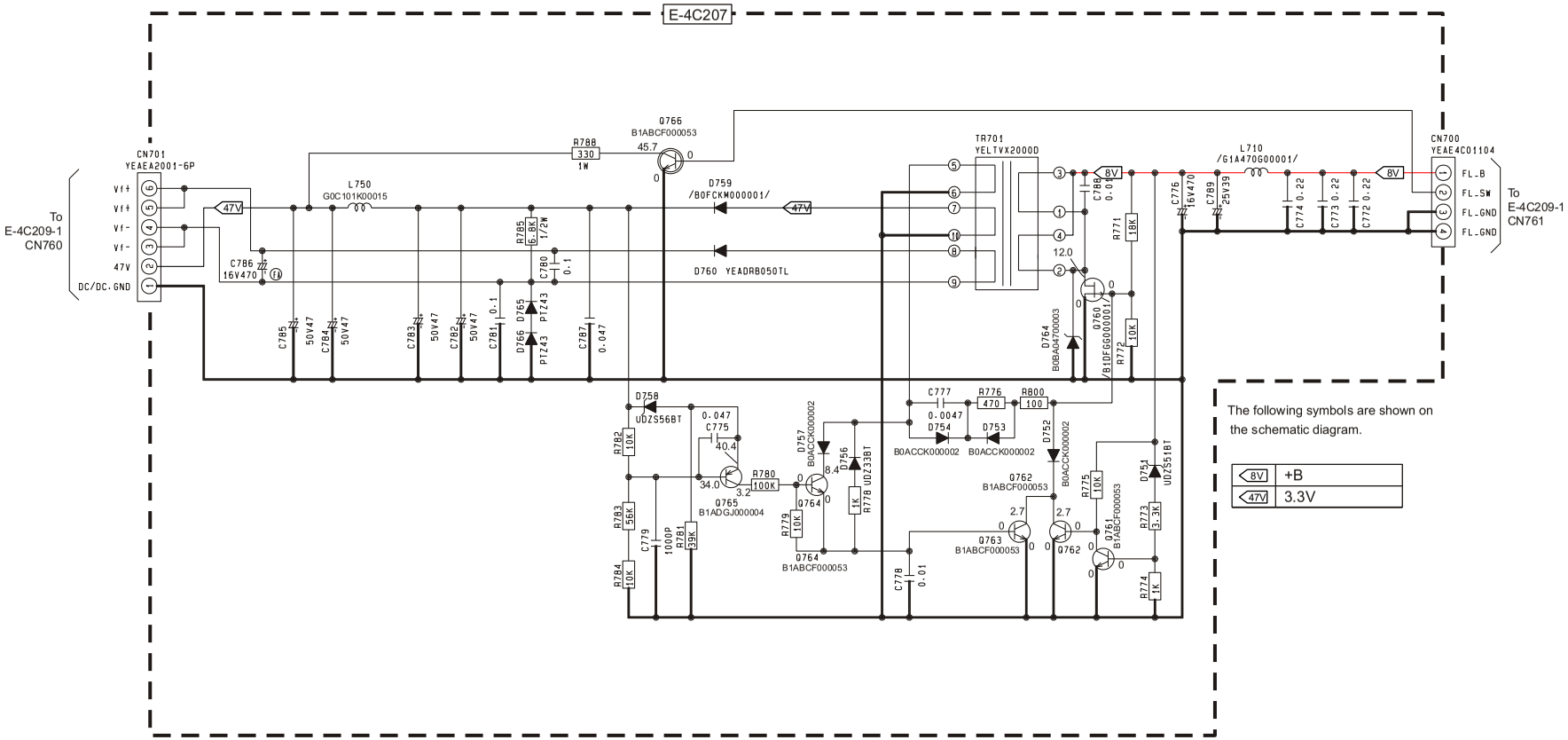
E-4C207
CN701
YEAEA2001-6P
Vf+
Vf+
Vf-
Vf-
47V
DC/DC.GND
To
E-4C209-1
CN760
47V
C786
16V470
C785
50V47
C784
50V47
L750
G0C101K00015
C793
50V47
C782
50V47
C781
0.1
D766
PTZ43
D765
PTZ43
R785
6.8K
1/2W
C780
0.1
C787
0.047
R788
330
1W
Q766
B1ABCF000053
45.7
0
D759
/B0FCKM000001/
D760 YEADRB050TL
TR701
YELTVX2000D
12.0
C788
0.01
R771
18K
Q760
/B1DFG000001/
D764
B0BA04700003
R772
10K
C776
16V470
C789
25V39
L710
/G1A470G00001/
C774 0.22
C773 0.22
C772 0.22
CN700
YEAE4C01104
FL_B
FL_SW
FL_GND
FL_GND
To
E-4C209-1
CN761
D758
UDZS56BT
R782
10K
R783
56K
R784
10K
C779
1000P
R781
39K
0.047
C775
40.4
34.0
3.2
R780
100K
Q765
B1ADGJ000004
D757
B0ACCK000002
8.4
D756
R778 UDZ33BT
1K
R779
10K
Q764
B1ABCF000053
C777
0.0047
R776
470
R800
100
D754
D753
B0ACCK000002
B0ACCK000002
D752
B0ACCK000002
Q762
B1ABCF000053
2.7
Q763
B1ABCF000053
2.7
Q762
R775
10K
Q761
B1ABCF000053
D751
UDZS51BT
R773
5.3K
R774
1K
C778
0.01
8V
47V
The following symbols are shown on the schematic diagram.
8V +B
47V 3.3V

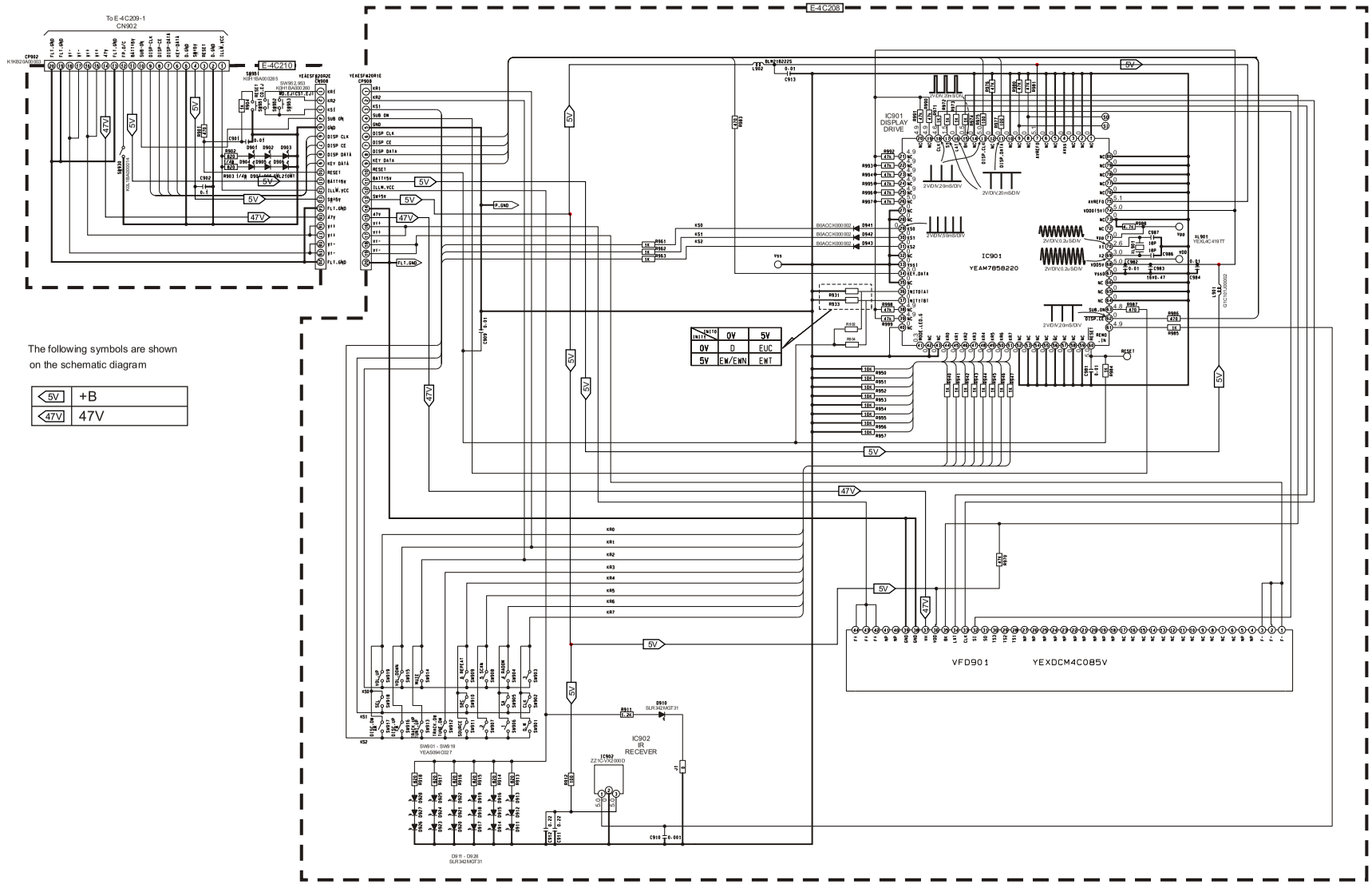

The following symbols are shown on the schematic diagram

5V	+B
47V	47V

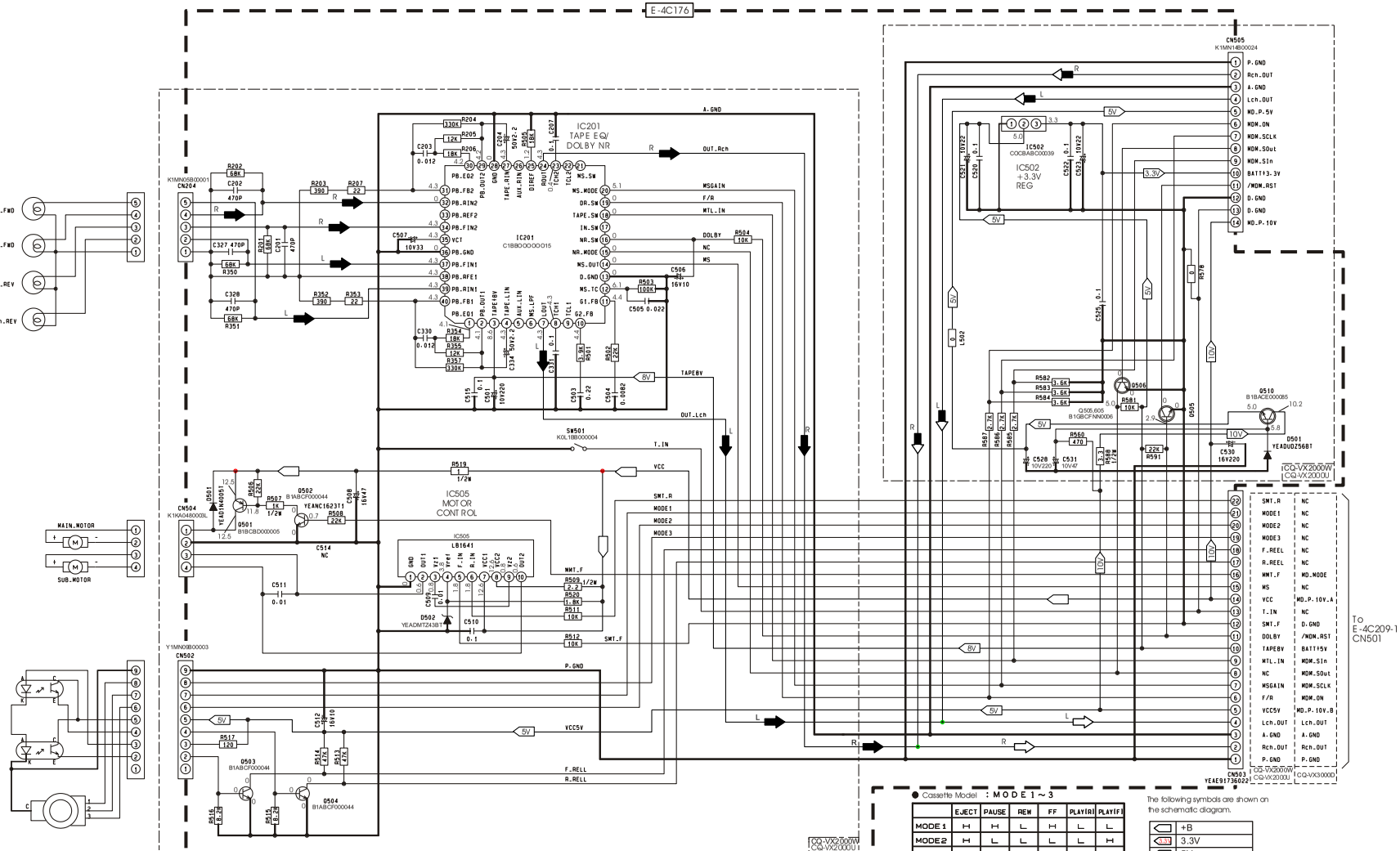
E-4C176
IC201
TAPE EQ/
DOLBY NR
IC201
C1BB00000015
IC502
+3.3V
REG
IC505
MOTOR
CONTROL
IC505
LB1641
CN505
K1MN14B00024
CN204
K1MN05B00001
CN504
K1KA048003L
CN502
Y1MN05B00003
CN503
YEAE917362
SW501
K0L11B000004
MAIN.MOTOR
SUB.MOTOR
Lvh.FWD
Rch.FWD
Rch.REV
Lch.REV
CQ-VX2000W
CQ-VX2000U
CQ-VX3000W
CQ-VX3000U
To
E-4C209-1
CN501
P.GND
Rch.OUT
A.GND
Lch.OUT
WD.P.5V
WDM.ON
WDM.SCLK
WDM.SOut
WDM.SIn
BATT+3.3V
/WDM.RST
D.GND
D.GND
WD.P.10V
SMT.R
MODE1
MODE2
MODE3
F.REEL
R.REEL
WMT.F
WS
VCC
T.IN
SMT.F
DOLBY
TAPE8V
MTL.IN
NC
MSGAIN
F/R
VCC5V
OUT.Rch
OUT.Lch
F.RELL
R.RELL
● Cassette Model : MODE 1～3
EJECT PAUSE REW FF PLAY(R) PLAY(F)
MODE 1 H H L H L L
MODE 2 H L L L L H
MODE 3 L H L L H H
The following symbols are shown on the schematic diagram.
+B
3.3V
5V
8V
10V
TAPE
MD
AUDIO

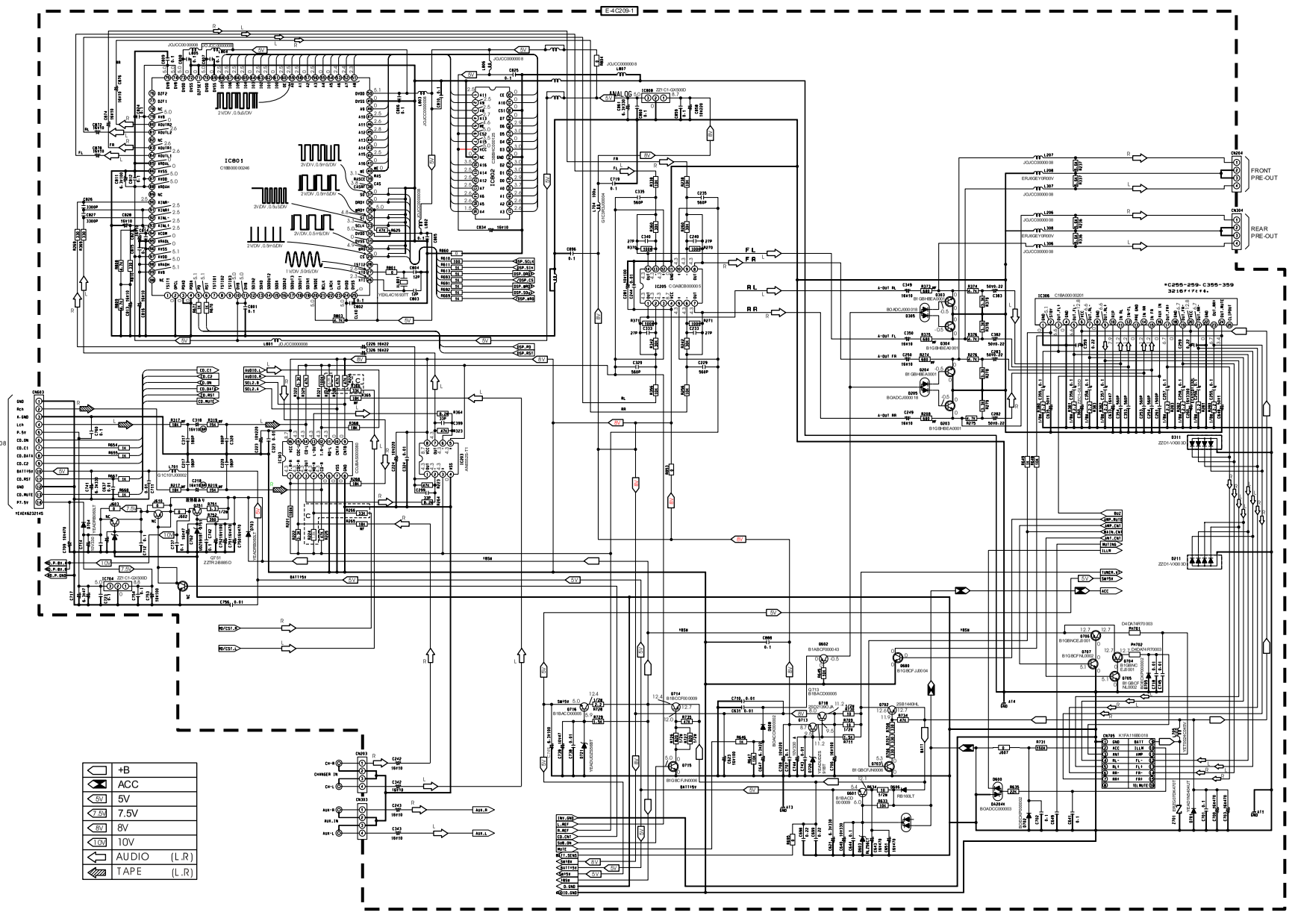
E-4C209-1
IC801
C1BB000002A6
ANALOG 5V
FRONT PRE-OUT
REAR PRE-OUT
FL
FR
RL
RR
*C255-259, C355-359
3216FF7F16.
To VJB62108 CN2
CN603
CN603
CN603

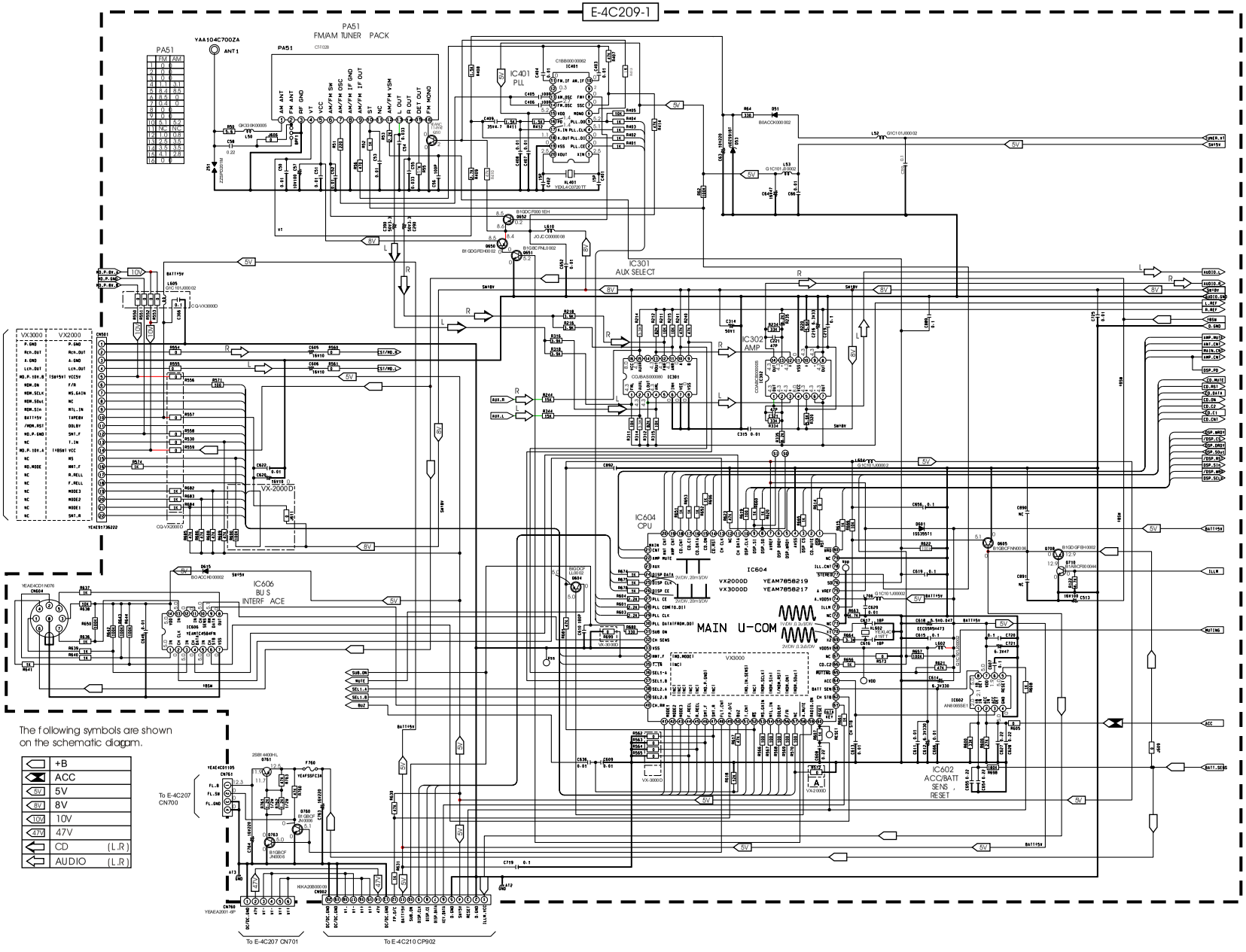
E-4C209-1
PA51
FM/AM TUNER PACK
IC401
PLL
IC301
AUX SELECT
IC302
AMP
IC604
CPU
IC606
BUS
INTERFACE
MAIN U-COM
IC604
VX2000D YEAM7858219
VX3000D YEAM7858217
IC602
ACC/BATT
SENS
RESET
To E-4C176
CN603
[VX2000D]
To E-4C177
CN603
[VX3000D]
To E-4C207
CN700
To E-4C207 CN701
To E-4C210 CP902
The following symbols are shown
on the schematic diagram.
+B
ACC
5V
8V
10V
47V
CD (L.R)
AUDIO (L.R)

Specifications *

General

Power Supply	:12V DC (11V -16V) Test Voltage 14.4V, Negative ground
Current Consumption	:8.5A (at CD operation, rated output)
Rated Output	:16W x 4 channels (1,000Hz,1%,4Ω)
Maximum Output	: 37W x 4 channels
Suitable Speaker Output	: 4Ω
Audio Input Impedance	: 10kΩ
Audio Input Sensitivity	: 700mV (AUX IN)
Pre-out Voltage	:600mV
Preout Impedance	:600Ω

DSP

Channel	: 2 Channels (input) 4 Channels (output)
DSP Patterns	: 7 patterns
Equalizer Center Frequency	: 80,160,320,640,1.6k 4k,10k (Hz)
Equalized Range	: -12 dB to +12 dB (13 step)

FM Stereo Radio

Frequency Range	: 87.5 - 108.0 MHz
Usable Sensitivity	: 12dBf.
Total Harmonic Distortion (mono)	: 0.3% (1kHz)
Signal to Noise Ratio (mono)	: 70dB
Frequency Response	: 20 to 15,000 Hz ±3dB
Stereo Separation	: 42 dB (1 kHz)
Image Rejection Ratio	: 75 dB

MW Ratio

Frequency Range	: 531 - 1,602 kHz
Usable Sensitivity	: 27 dB/μV (S/N 20 dB)
Image Rejection Ratio	: 65 dB

CD Player

Channel	: 2 channels
D/A Converter	: 16-bit linear
Frequency Response	: 5 to 20,000 Hz
Signal to Noise Ratio	: 90 dB (IHF A)
Wow and Flutter	: Below measurable limits

Cassette Player

Reproduction System	: 4-track, 2-program stereo
Tape Speed	: 4.76 cm/sec
FF/REW time	: less than 110 sec (C-60)
Frequency Response	: 30 to 14,000 Hz (Normal) : 30 to 17,000 Hz (Metal)
Wow and Flutter	: 0.12% (WRMS)
Signal to Noise Ratio	: 56 dB (IHF A) [Dolby B NR : OFF] : 66 dB (IHF A) [Dolby B NR : ON]

Dimensions** (W x H xD) : 178 x 100 x160 (mm)
Weight** : 2.7 kg

* Specifications and the design are subject to possible modification without notice due to improvement

** Dimensions and weight shown are approximate.

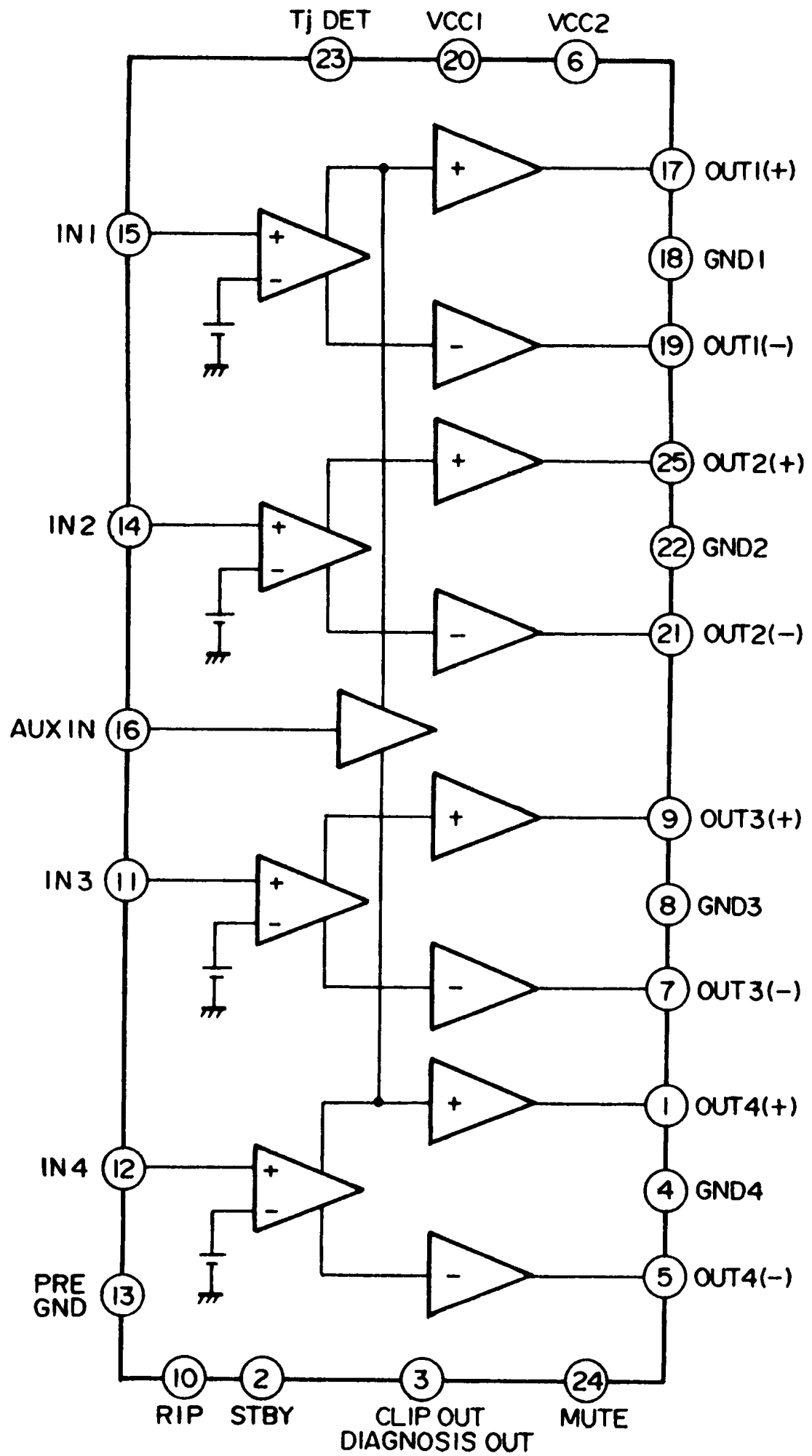
Tj DET
VCC1
VCC2
23
20
6
17
OUT1(+)
IN1
15
18
GND1
19
OUT1(−)
25
OUT2(+)
IN2
14
22
GND2
21
OUT2(−)
AUX IN
16
9
OUT3(+)
IN3
11
8
GND3
7
OUT3(−)
1
OUT4(+)
IN4
12
4
GND4
PRE GND
13
5
OUT4(−)
10
2
3
24
RIP
STBY
CLIP OUT
DIAGNOSIS OUT
MUTE

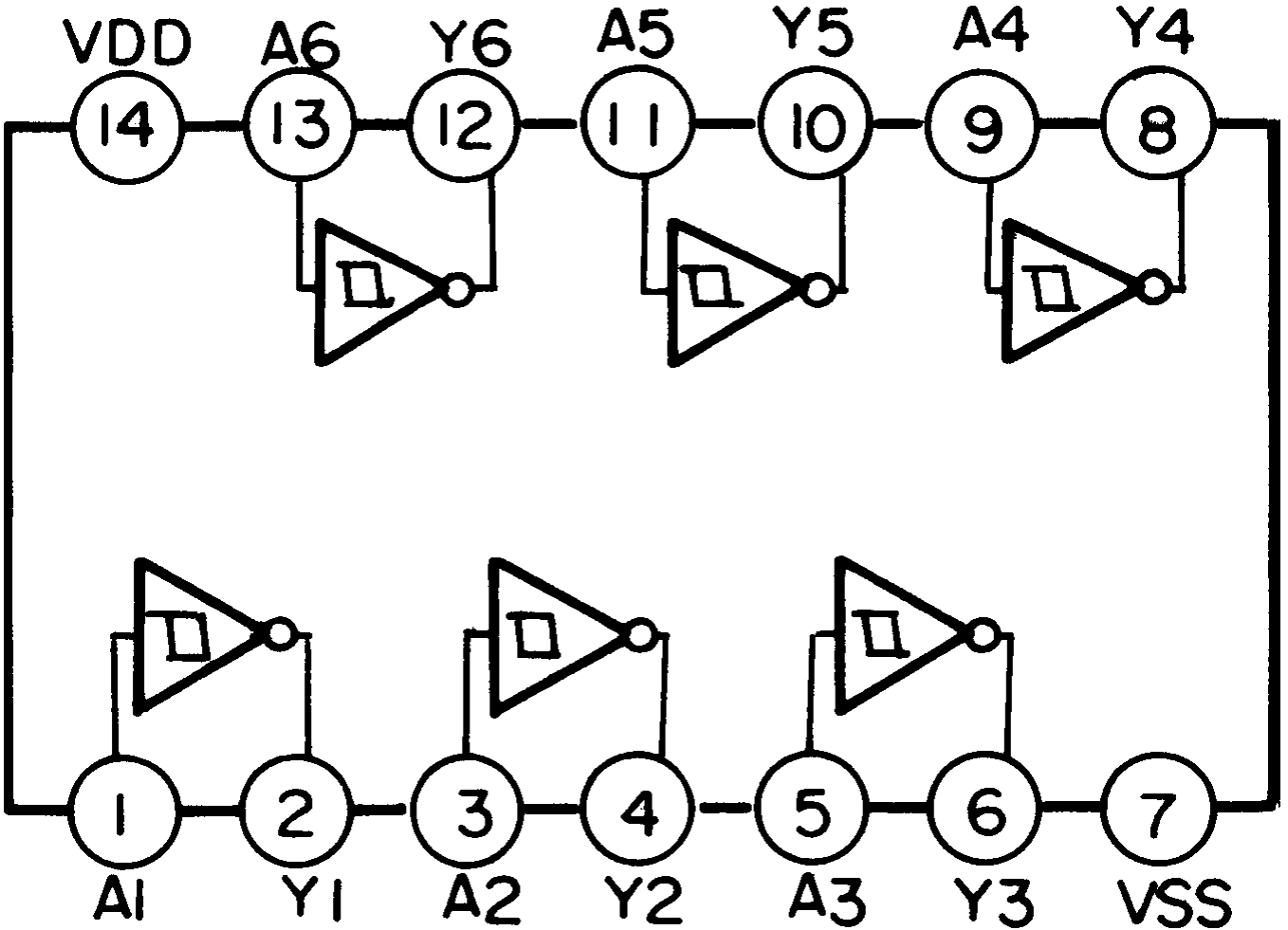
VDD
A6
Y6
A5
Y5
A4
Y4
14
13
12
11
10
9
8
1
2
3
4
5
6
7
A1
Y1
A2
Y2
A3
Y3
VSS

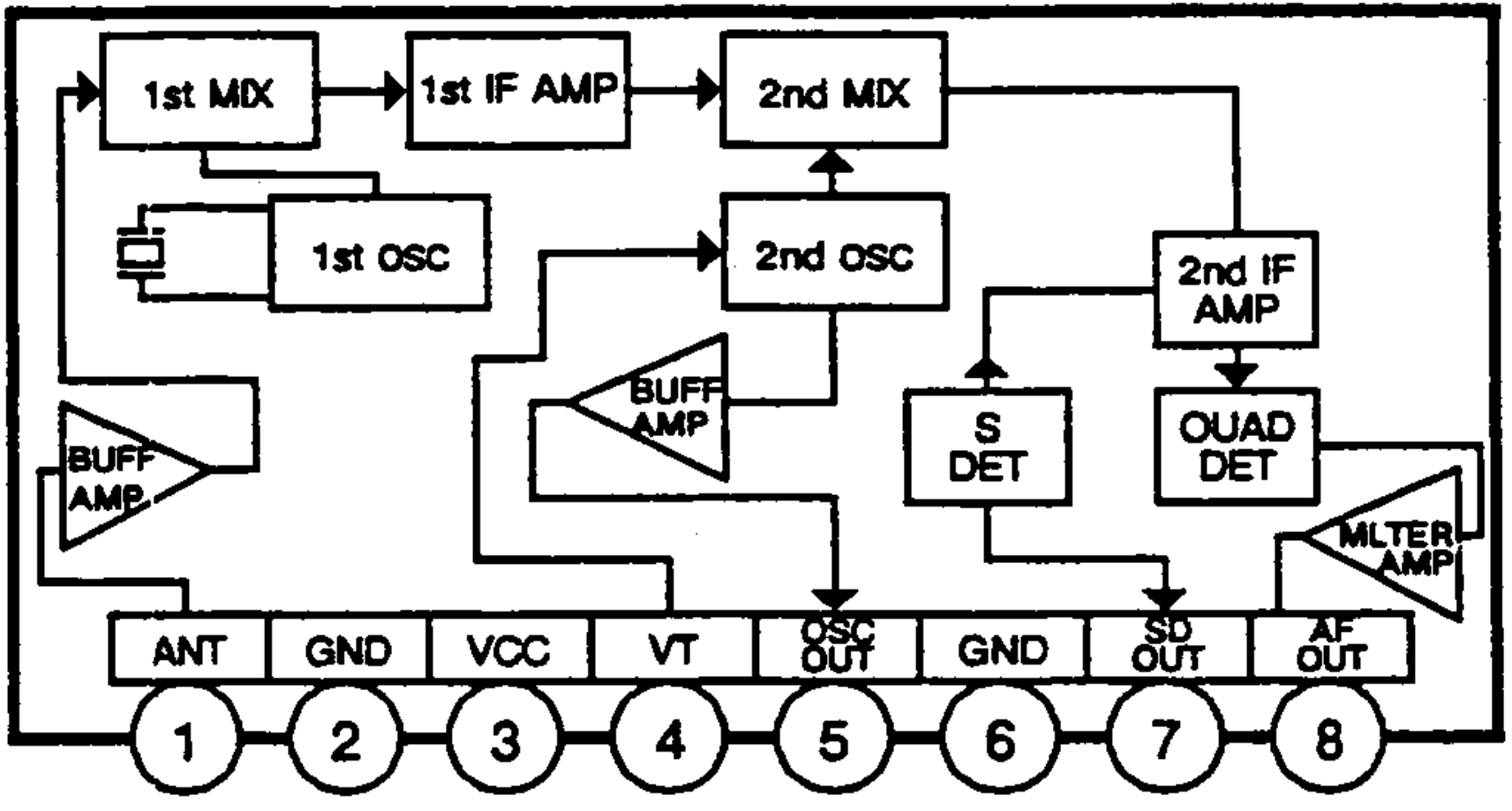
1st MIX
1st IF AMP
2nd MIX
1st OSC
2nd OSC
2nd IF AMP
BUFF AMP
BUFF AMP
S DET
QUAD DET
MLTER AMP
ANT
GND
VCC
VT
OSC OUT
GND
SD OUT
AF OUT
1
2
3
4
5
6
7
8

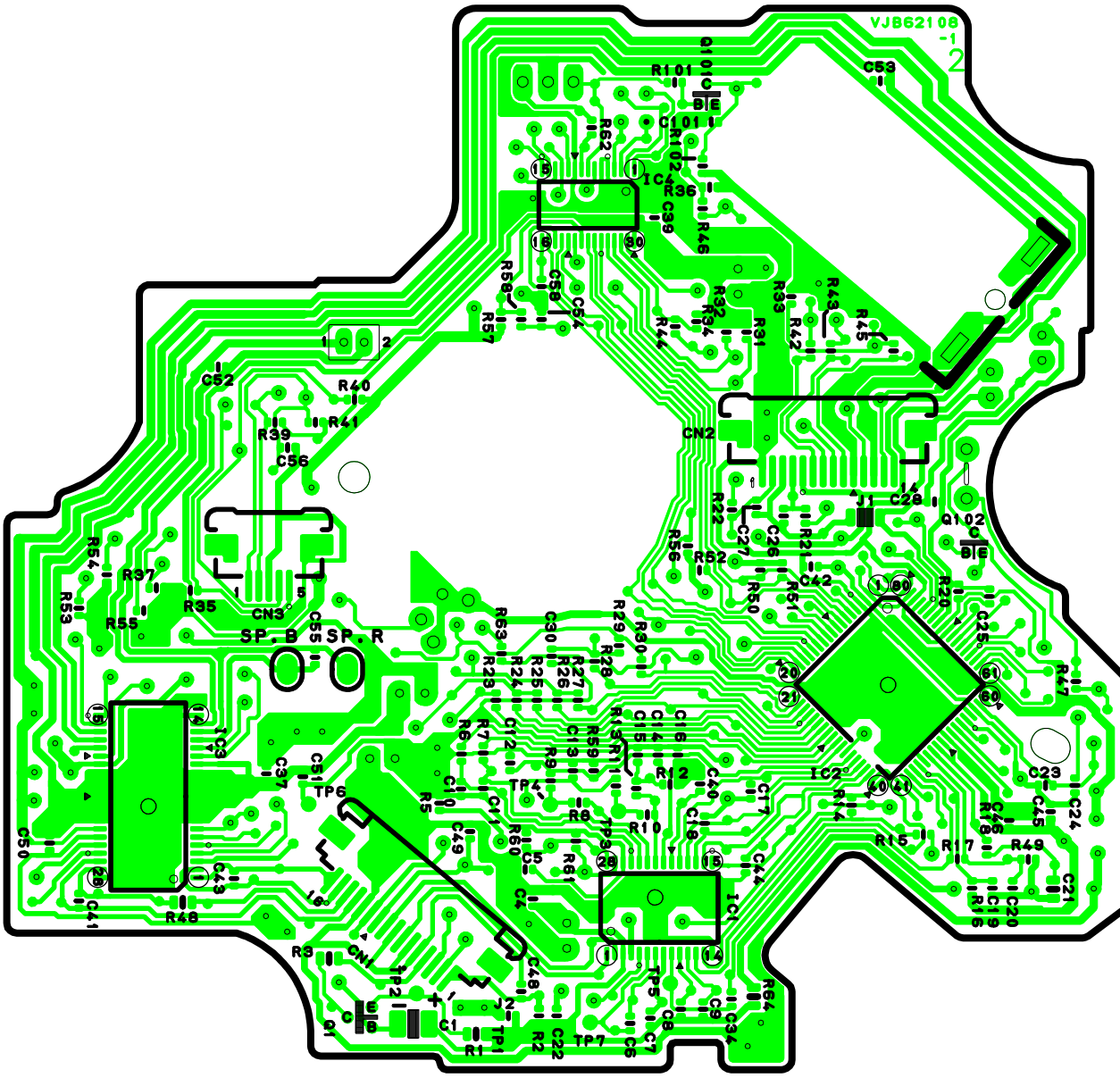

[VJB62108] Bottom View]

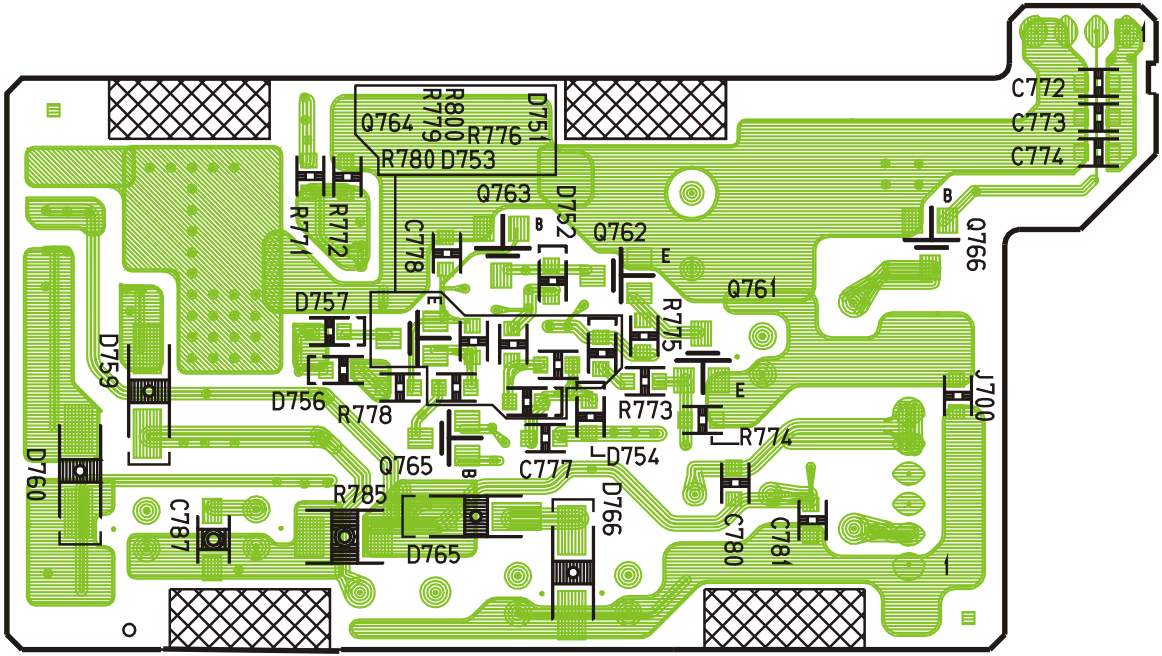

[E-4C207-1] [BOTTOM VIEW]

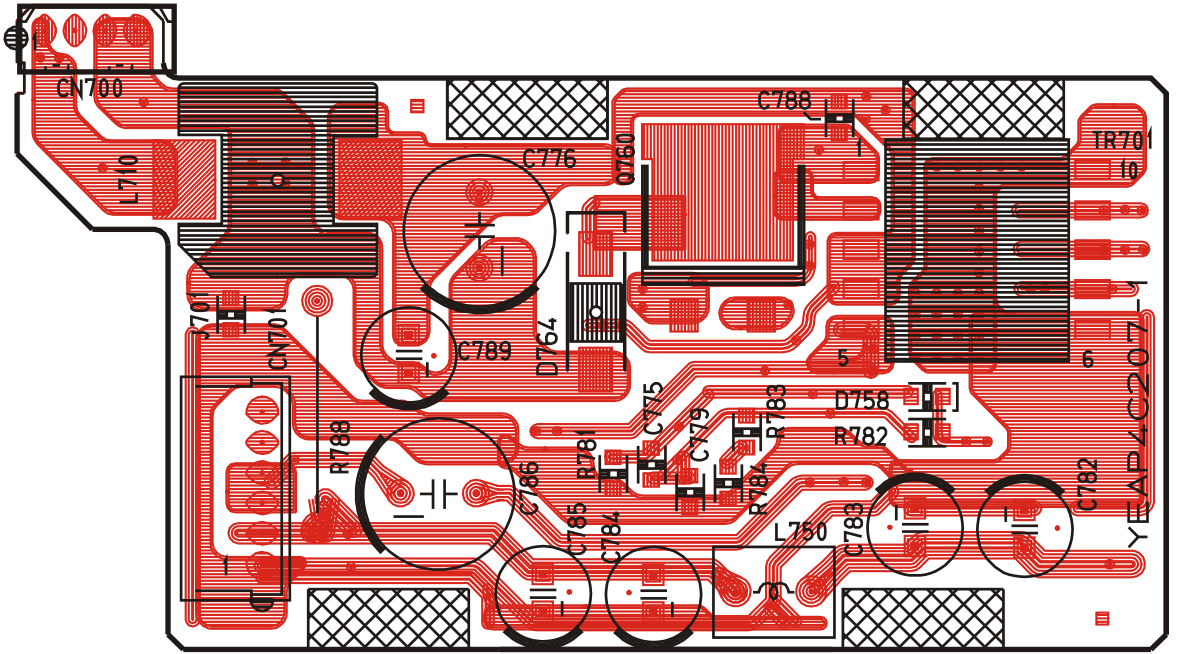

[E-4C207-1] [TOP VIEW]

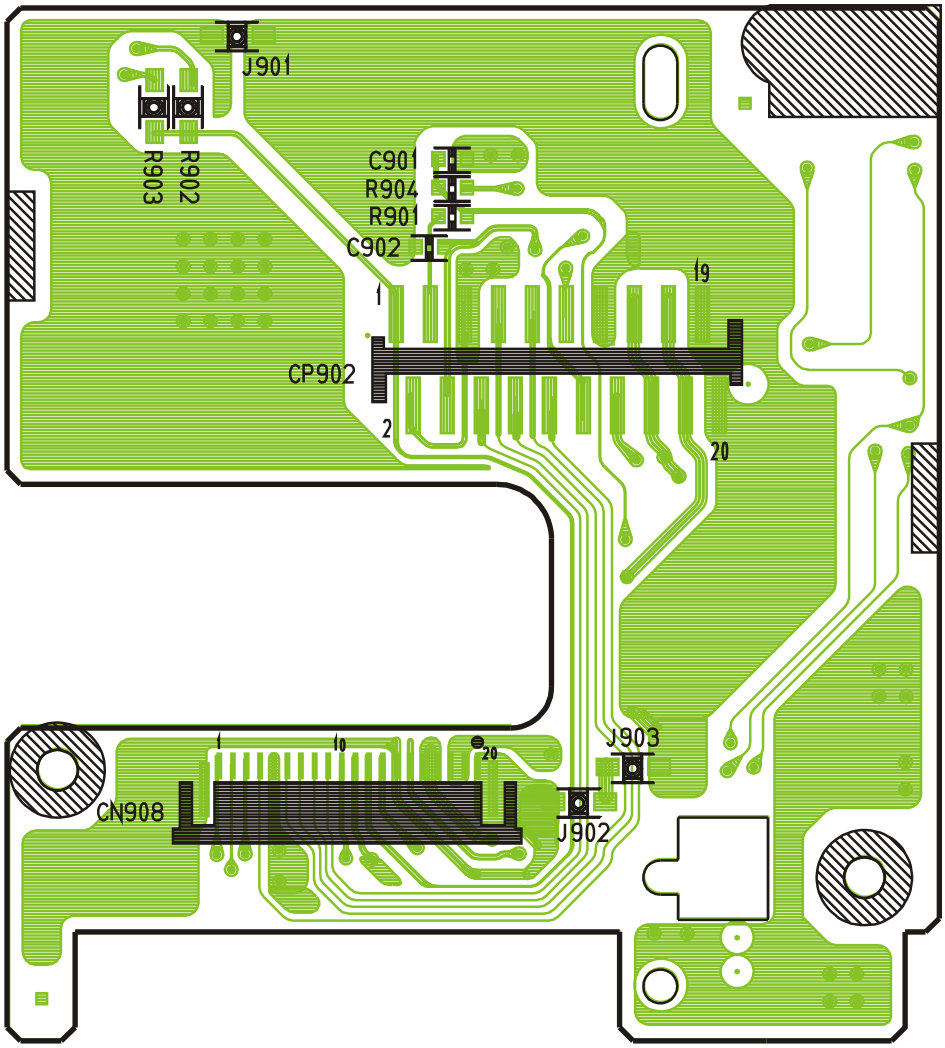

[E-4C210] [BOTTOM VIEW]

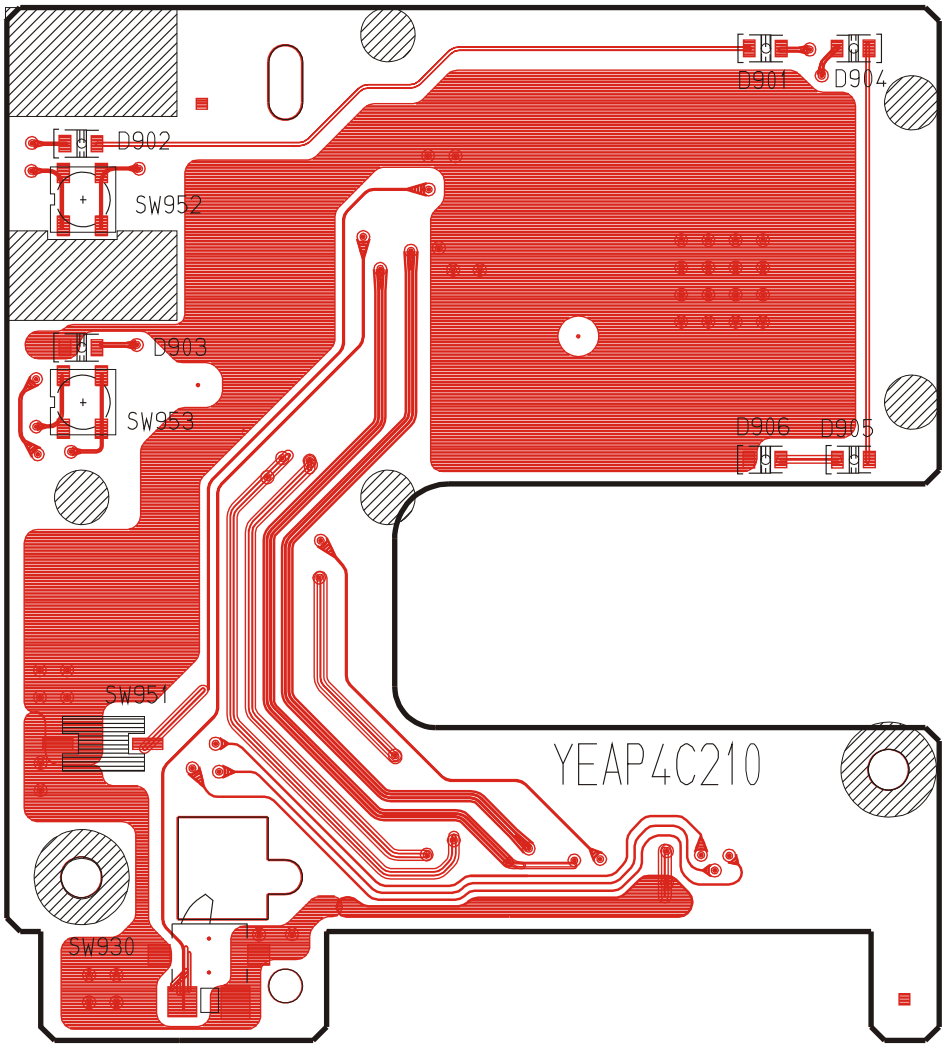

[E-4C210] [TOP VIEW]

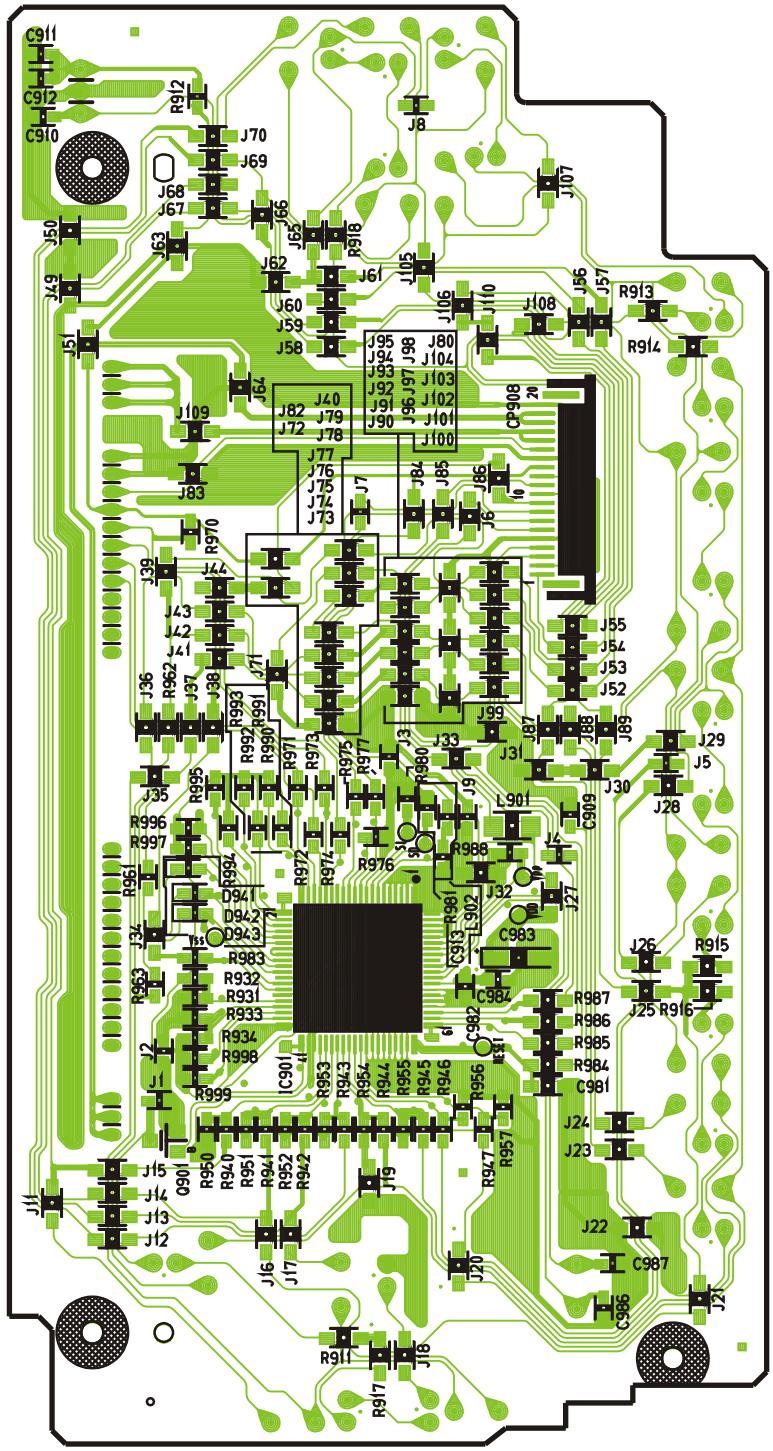

[E-4C208-1] [BOTTOM VIEW]

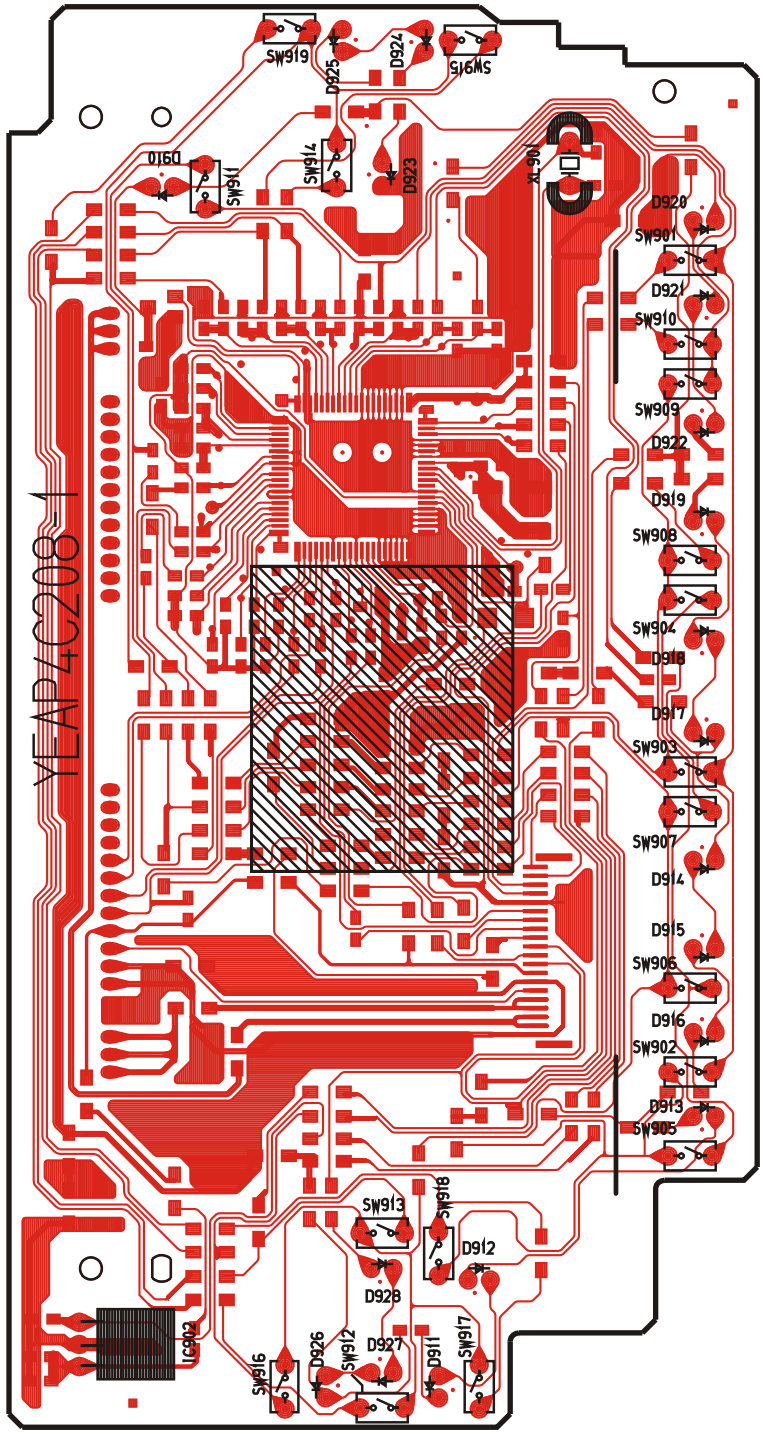

[E-4C208-1] [TOP VIEW]

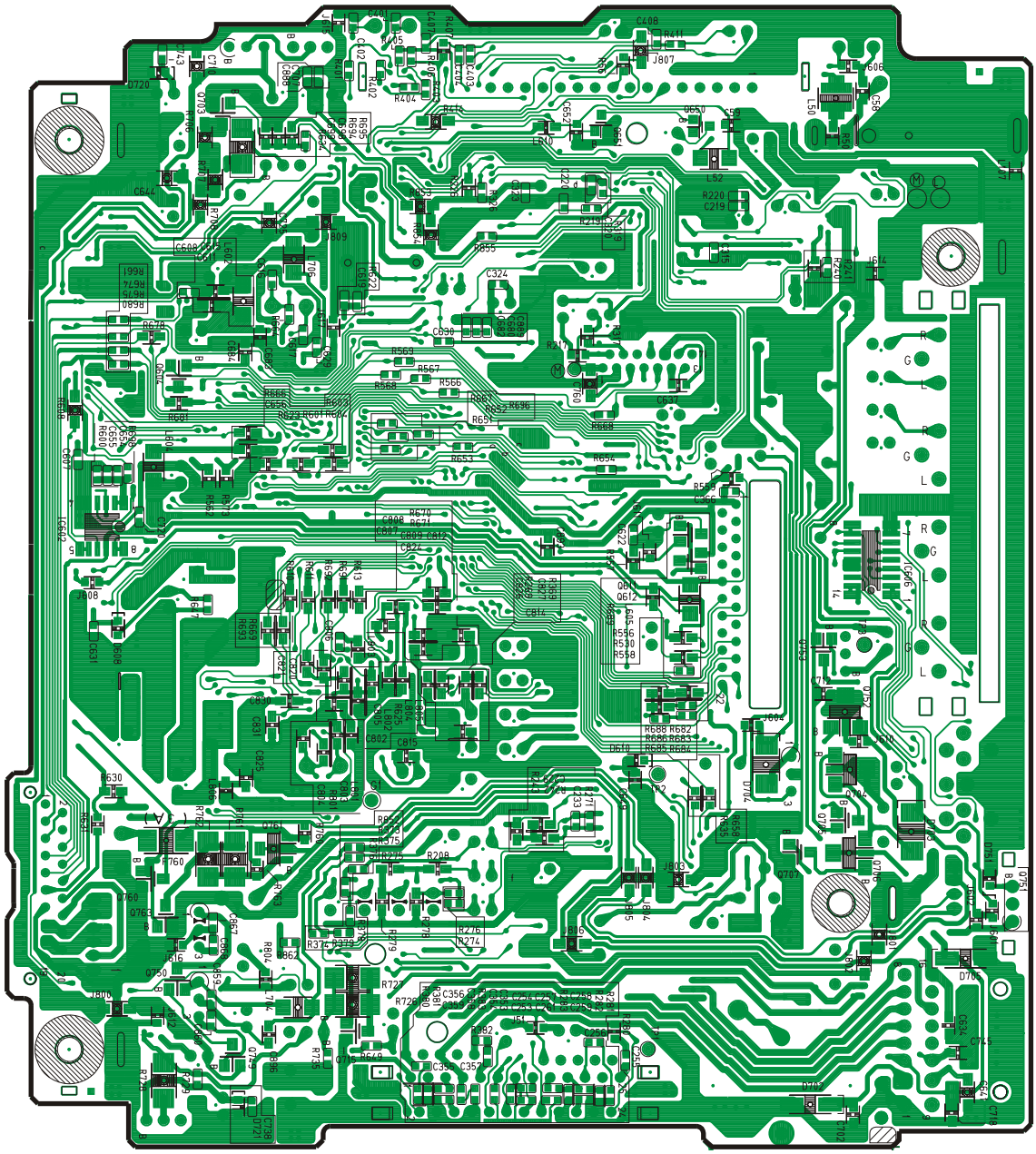

[E-4C209-1] [BOTTOM VIEW]

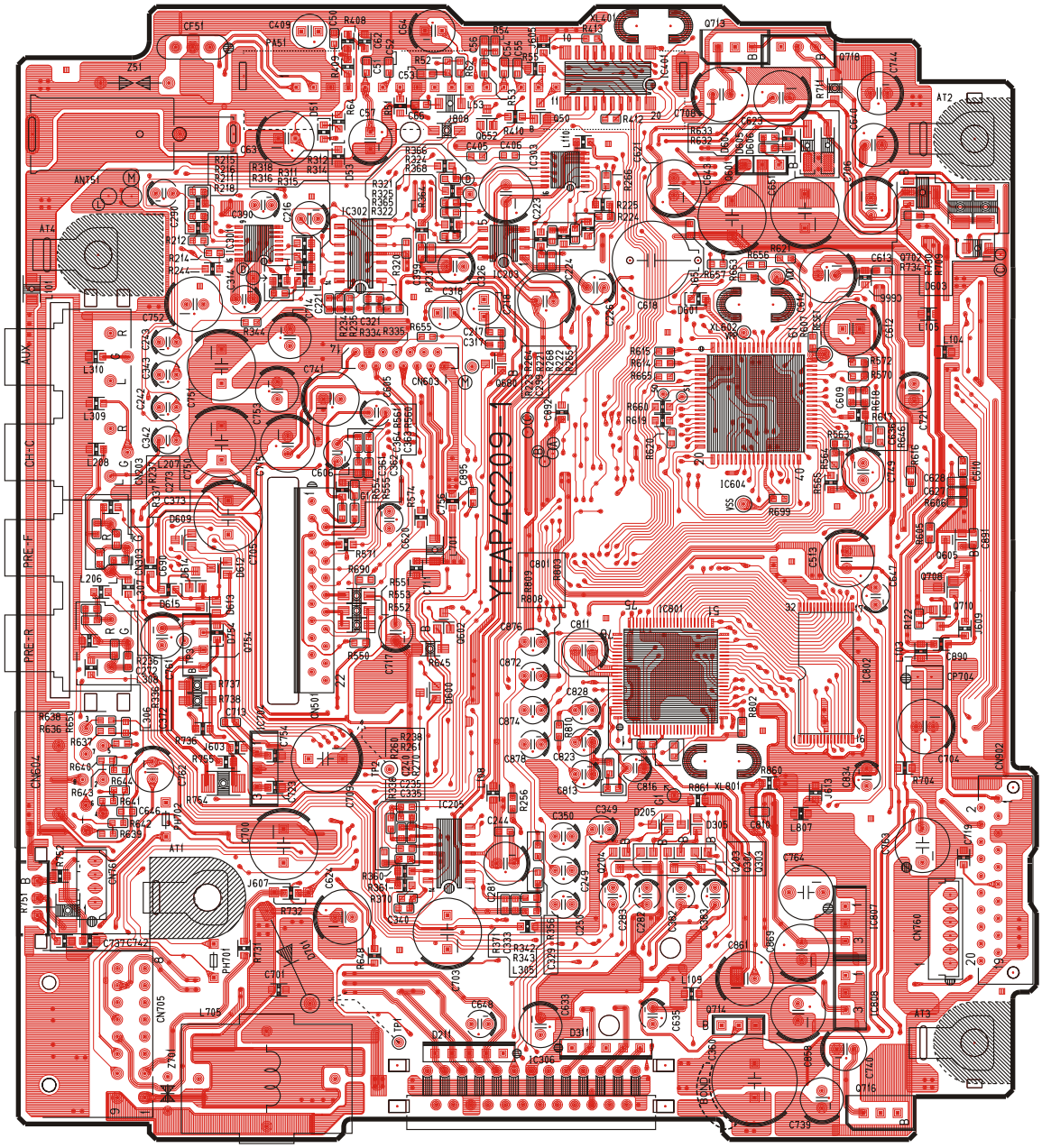

[E-4C209-1] [TOP VIEW]

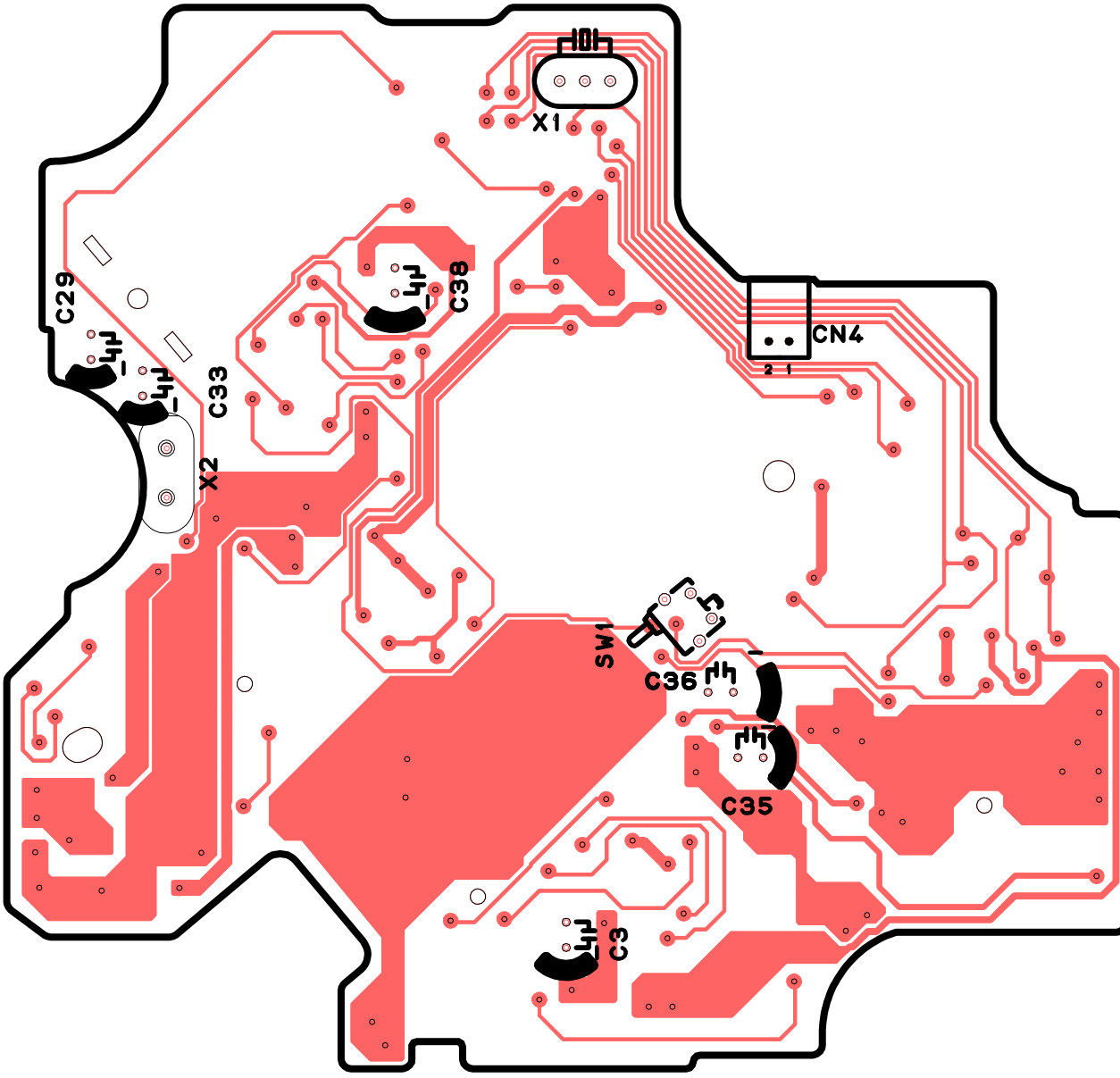

[VJB62108] [Top View]

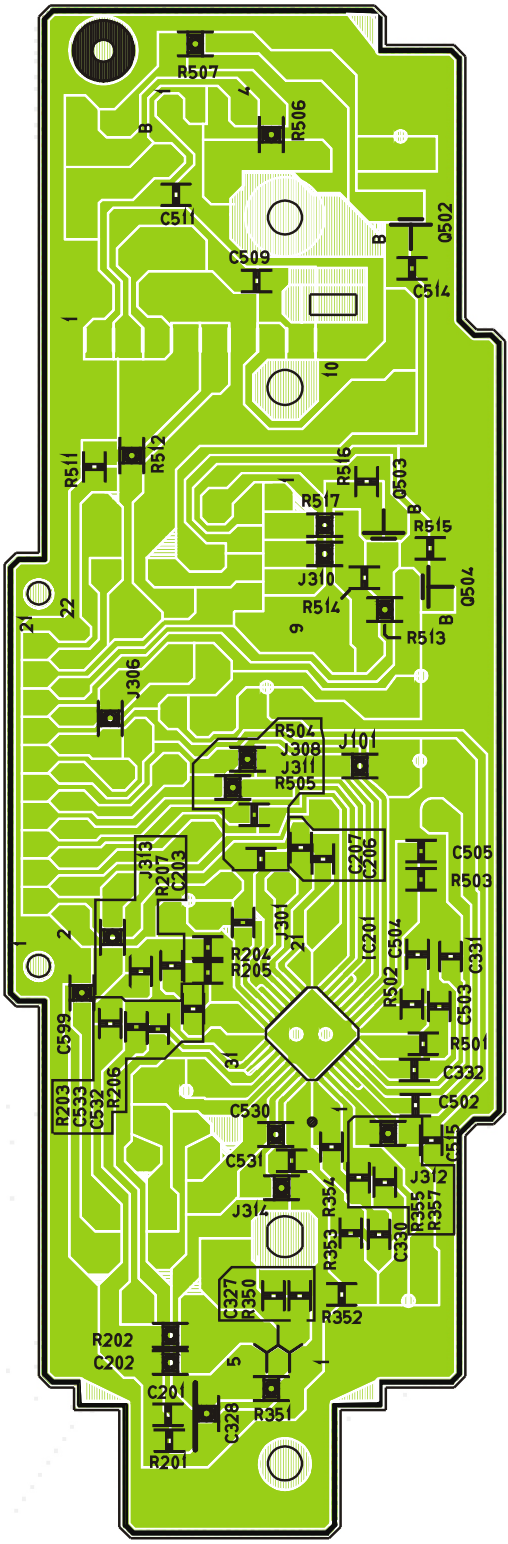

[E-4C176] [BOTTOM VIEW]

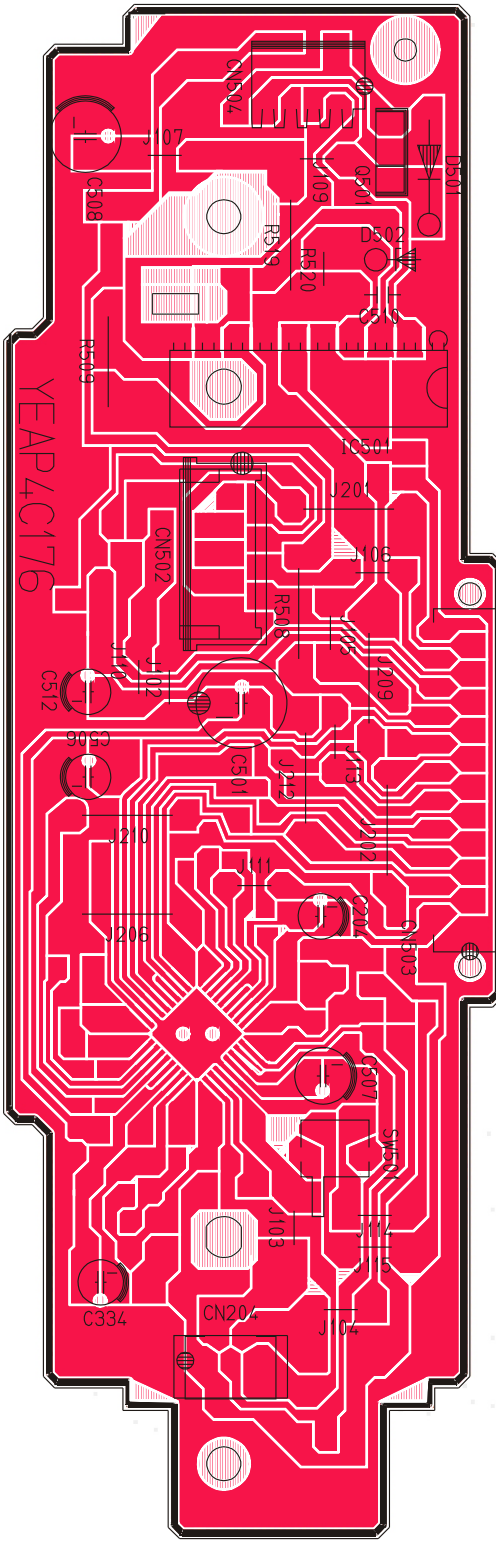

[E-4C176] [TOP VIEW]