Panasonic
OPEN
REMOTE
CQ-VX1300W
SOURCE
PWR
SPACE
SPC
SPACE POSI
CD 01 1 00
ST
REP
COMPACT disc DIGITAL AUDIO
FM
DISC
TUNE
TRACK
DISC
AM
D-M
DIRECT MEMORY
DOLBY B NR
VOL
EQ
AUDIO
POSI
SEL
DSP
SPACE
INTEGRATED CD / CASSETTE RECEIVER WITH DSP
Human Equalizer
MUTE
APM
REVERSE
S-ANALYZER
S-A
1
MTL
2
B NR
3
RANDOM
4
TPS
SCAN
5
SKIP
REPEAT
6
REPEAT
CLOCK
DISP
DISPLAY

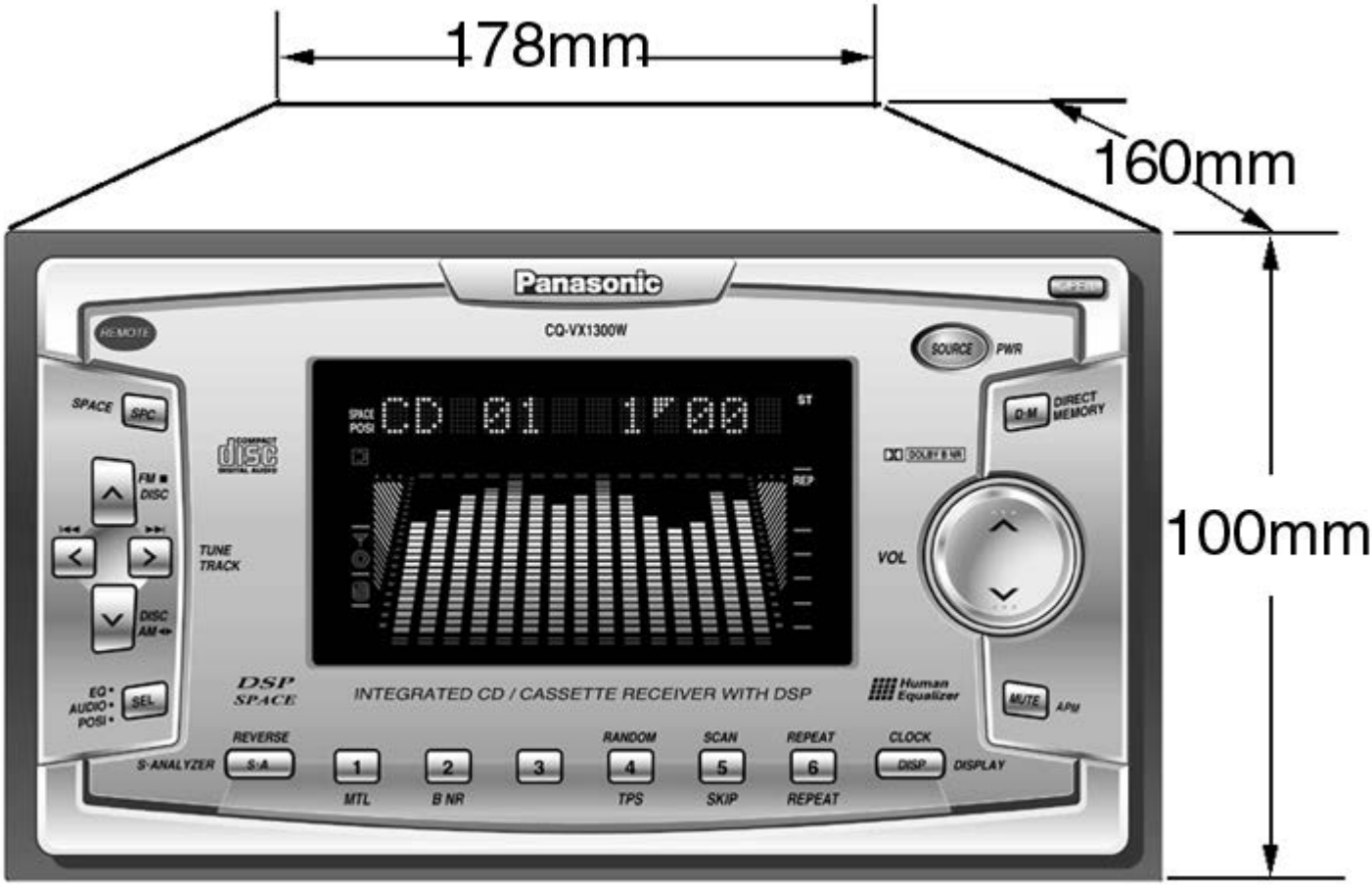
178mm
160mm
100mm
Panasonic
CQ-VX1300W
REMOTE
SOURCE
PWR
SPACE
SPC
FM
DISC
TUNE
TRACK
DISC
AM
EQ
AUDIO
POSI
SEL
CD 01 1:00
ST
REP
D-M
DIRECT
MEMORY
VOL
MUTE
APM
DSP
SPACE
INTEGRATED CD / CASSETTE RECEIVER WITH DSP
Human
Equalizer
REVERSE
S·ANALYZER
S·A
1
MTL
2
B NR
3
4
TPS
RANDOM
5
SKIP
SCAN
6
REPEAT
REPEAT
CLOCK
DISP
DISPLAY

ModelPicture

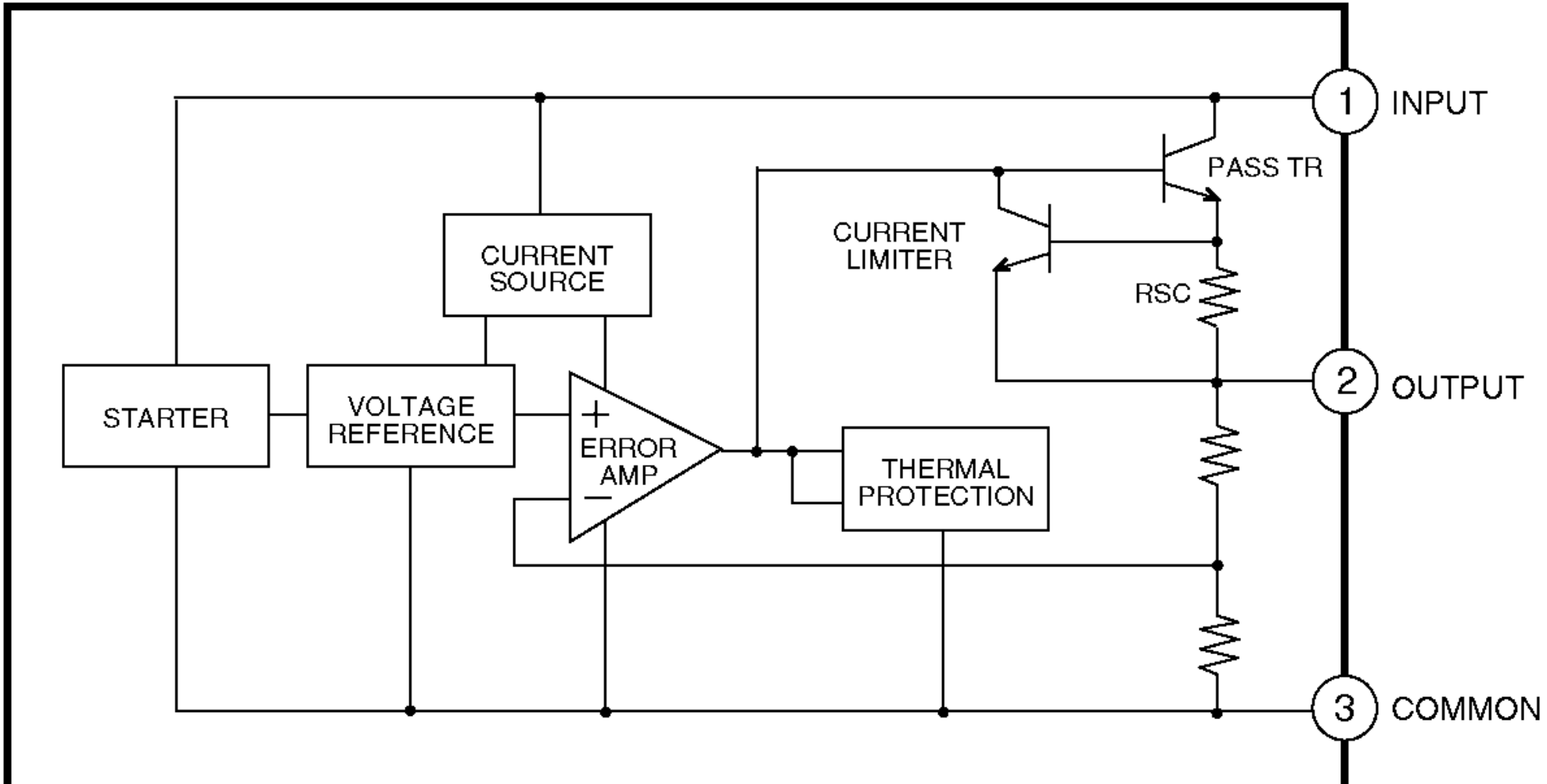
1
INPUT
PASS TR
CURRENT
LIMITER
CURRENT
SOURCE
RSC
2
OUTPUT
STARTER
VOLTAGE
REFERENCE
+
ERROR
AMP
−
THERMAL
PROTECTION
3
COMMON

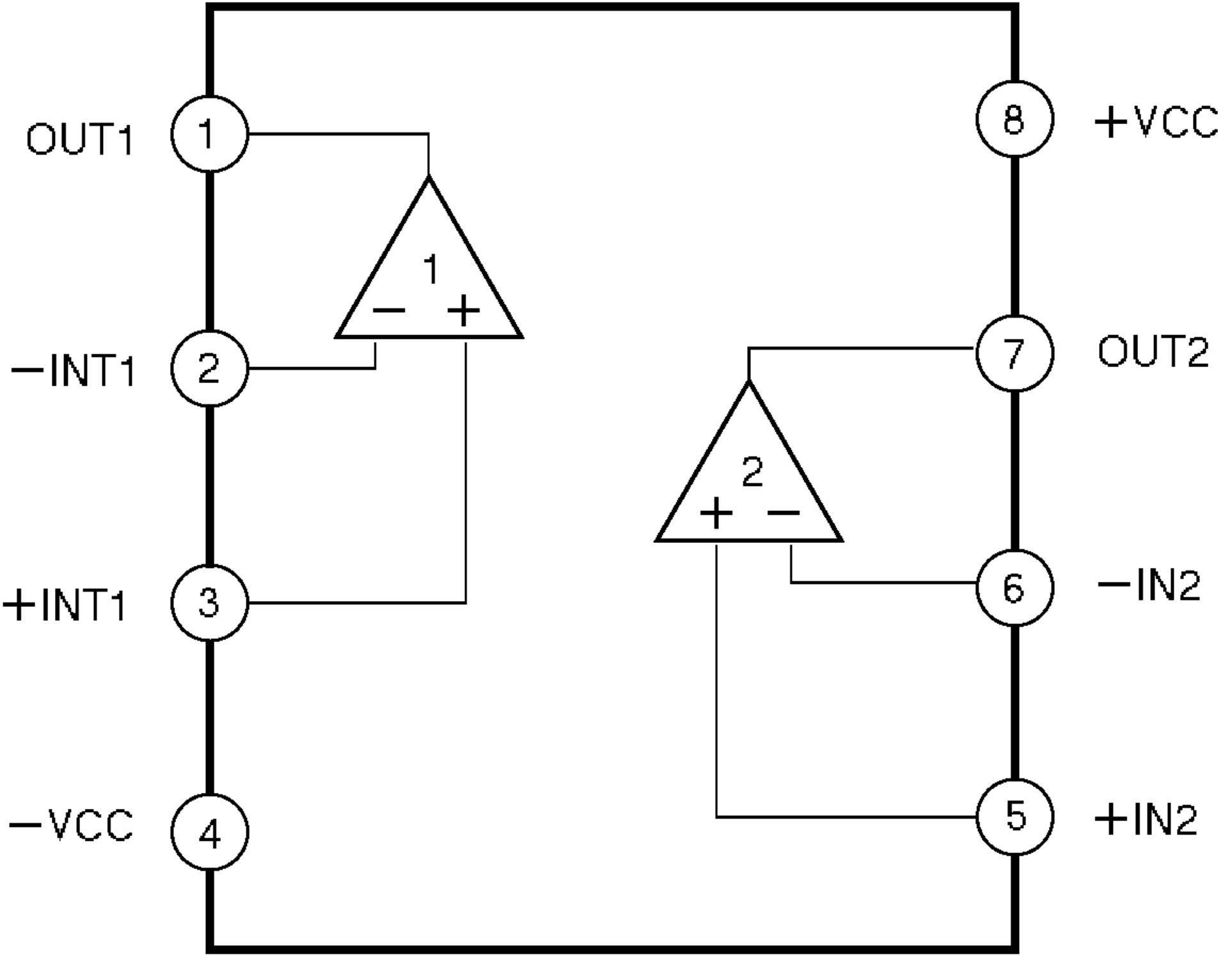
OUT1
1
−INT1
2
+INT1
3
−VCC
4
8
+VCC
7
OUT2
6
−IN2
5
+IN2
1
2

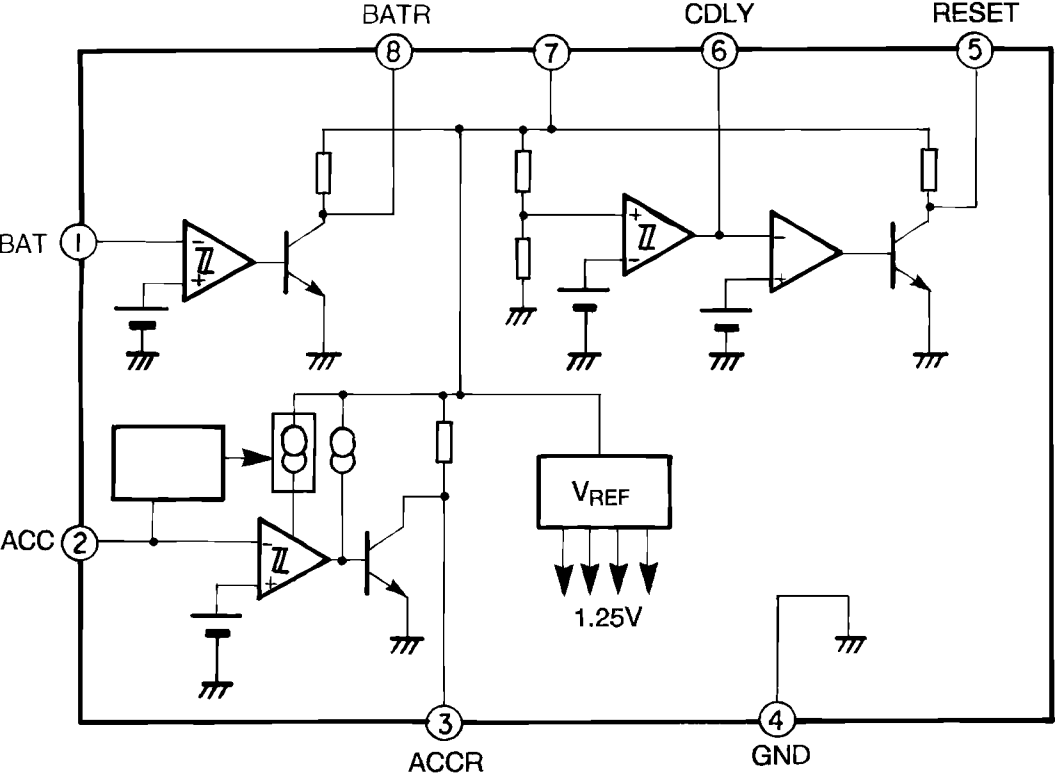
BATR
CDLY
RESET
8
7
6
5
BAT
1
ACC
2
VREF
1.25V
3
4
ACCR
GND

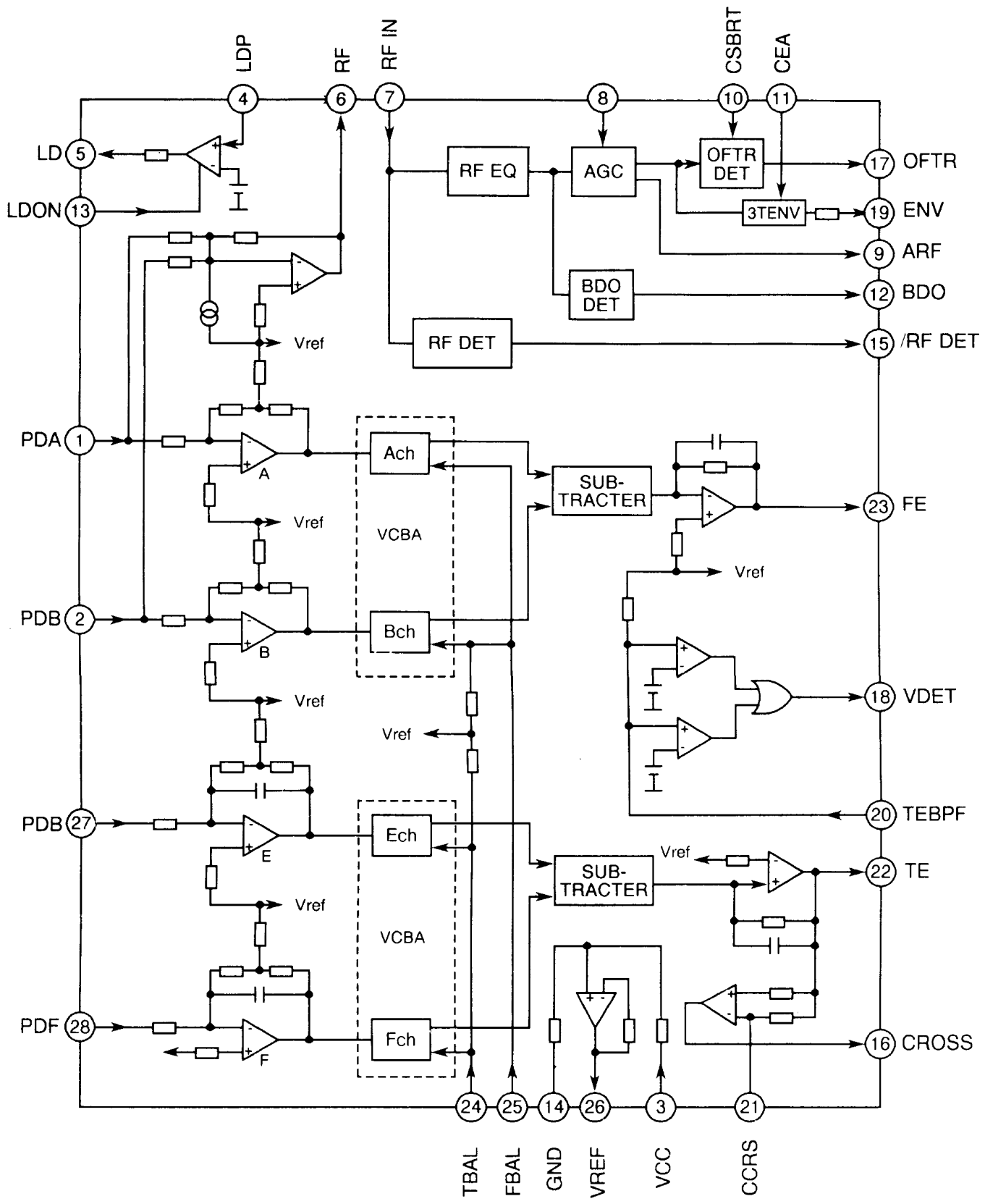
LDP
RF
RF IN
CSBRT
CEA
LD
LDON
RF EQ
AGC
OFTR DET
3TENV
OFTR
ENV
ARF
BDO DET
BDO
RF DET
/RF DET
Vref
PDA
A
Ach
VCBA
SUB-TRACTER
FE
PDB
B
Bch
VDET
TEBPF
PDB
E
Ech
TE
PDF
F
Fch
CROSS
TBAL
FBAL
GND
VREF
VCC
CCRS

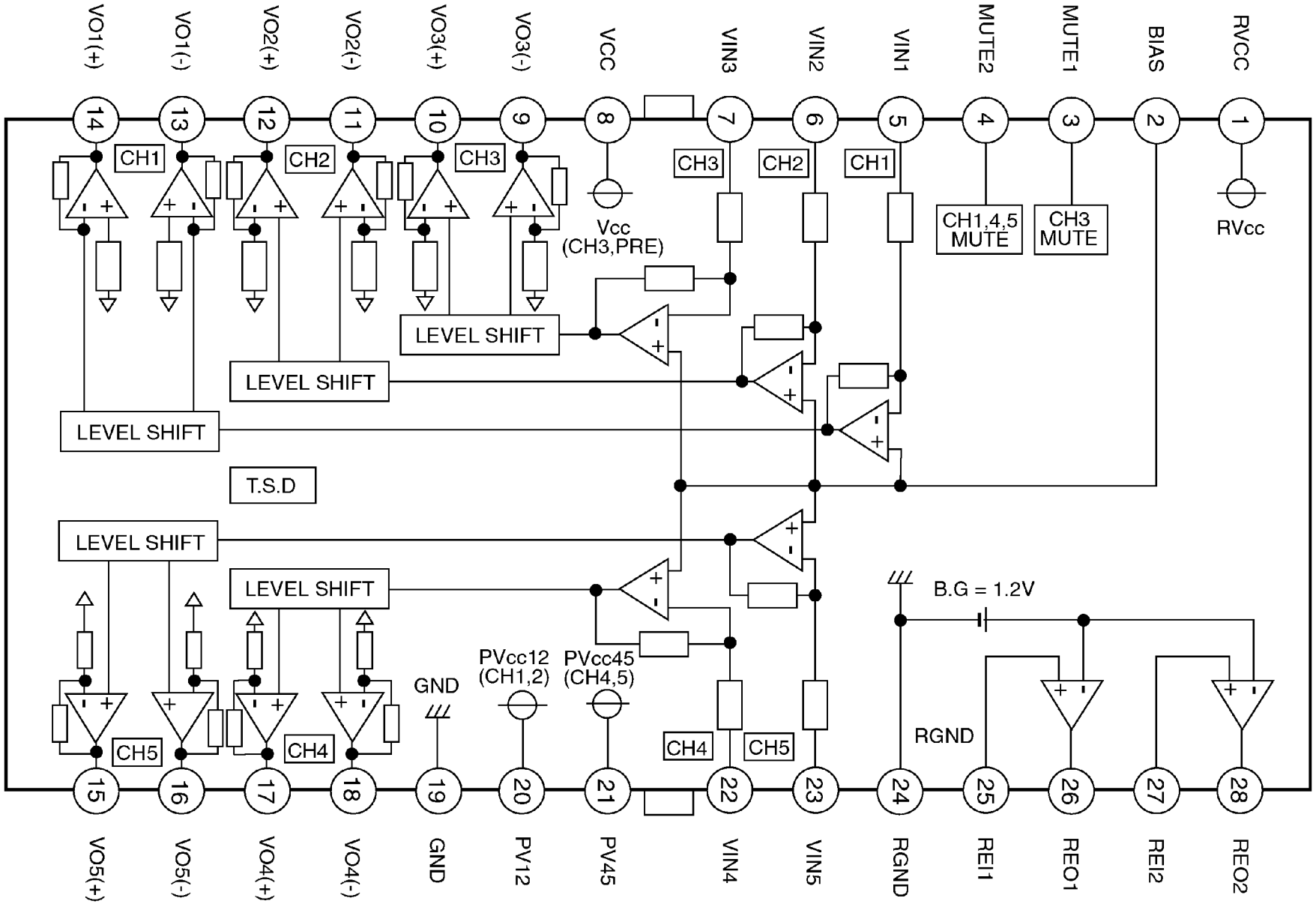
VO1(+)
VO1(-)
VO2(+)
VO2(-)
VO3(+)
VO3(-)
VCC
VIN3
VIN2
VIN1
MUTE2
MUTE1
BIAS
RVCC
14
13
12
11
10
9
8
7
6
5
4
3
2
1
CH1
CH2
CH3
CH3
CH2
CH1
Vcc
(CH3,PRE)
CH1,4,5
MUTE
CH3
MUTE
RVcc
LEVEL SHIFT
LEVEL SHIFT
LEVEL SHIFT
T.S.D
LEVEL SHIFT
LEVEL SHIFT
B.G = 1.2V
PVcc12
(CH1,2)
PVcc45
(CH4,5)
GND
CH5
CH4
CH4
CH5
RGND
15
16
17
18
19
20
21
22
23
24
25
26
27
28
VO5(+)
VO5(-)
VO4(+)
VO4(-)
GND
PV12
PV45
VIN4
VIN5
RGND
REI1
REO1
REI2
REO2

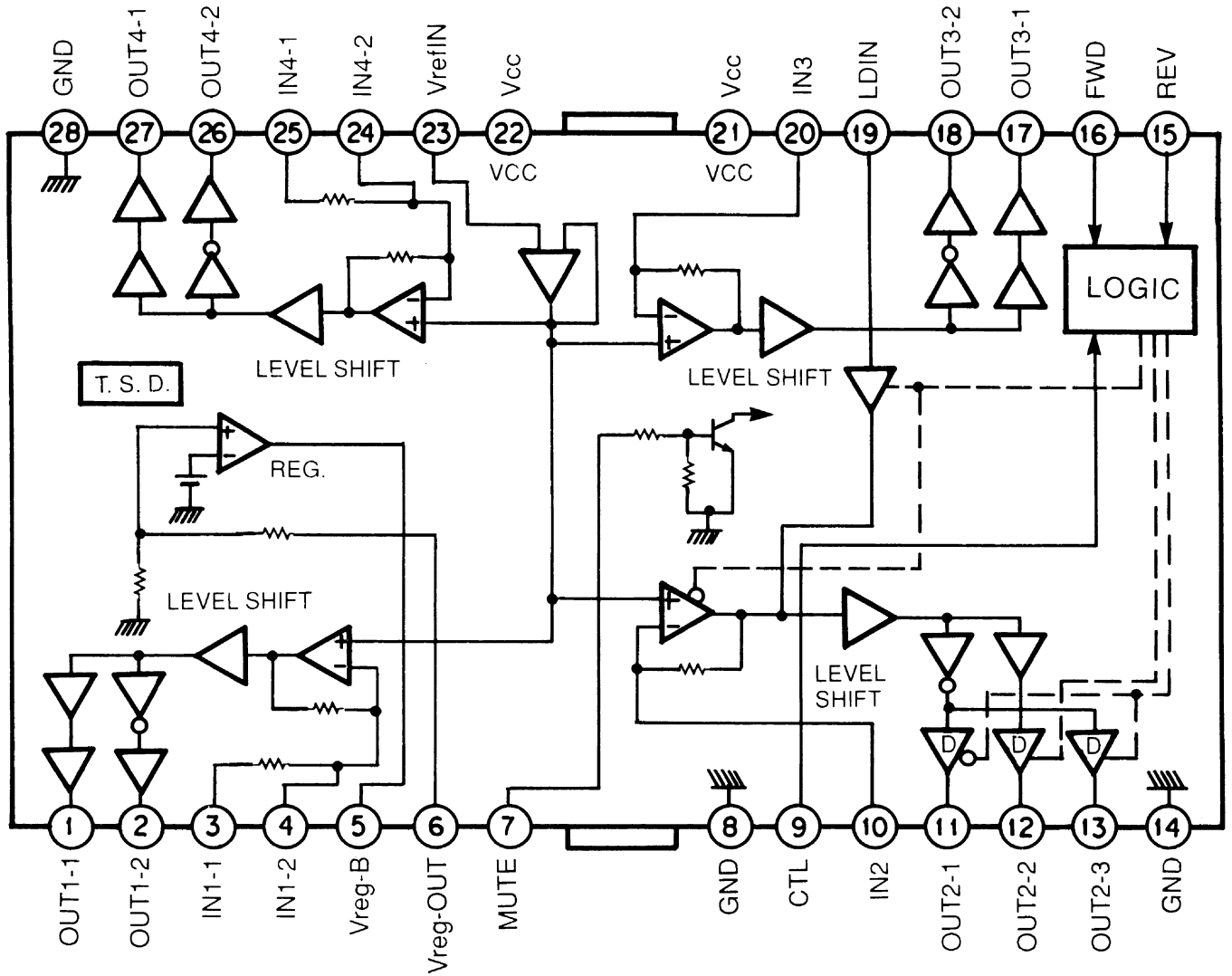
GND
OUT4-1
OUT4-2
IN4-1
IN4-2
VrefIN
Vcc
Vcc
IN3
LDIN
OUT3-2
OUT3-1
FWD
REV
28
27
26
25
24
23
22
21
20
19
18
17
16
15
VCC
VCC
LOGIC
LEVEL SHIFT
LEVEL SHIFT
T. S. D.
REG.
LEVEL SHIFT
LEVEL SHIFT
D
D
D
1
2
3
4
5
6
7
8
9
10
11
12
13
14
OUT1-1
OUT1-2
IN1-1
IN1-2
Vreg-B
Vreg-OUT
MUTE
GND
CTL
IN2
OUT2-1
OUT2-2
OUT2-3
GND

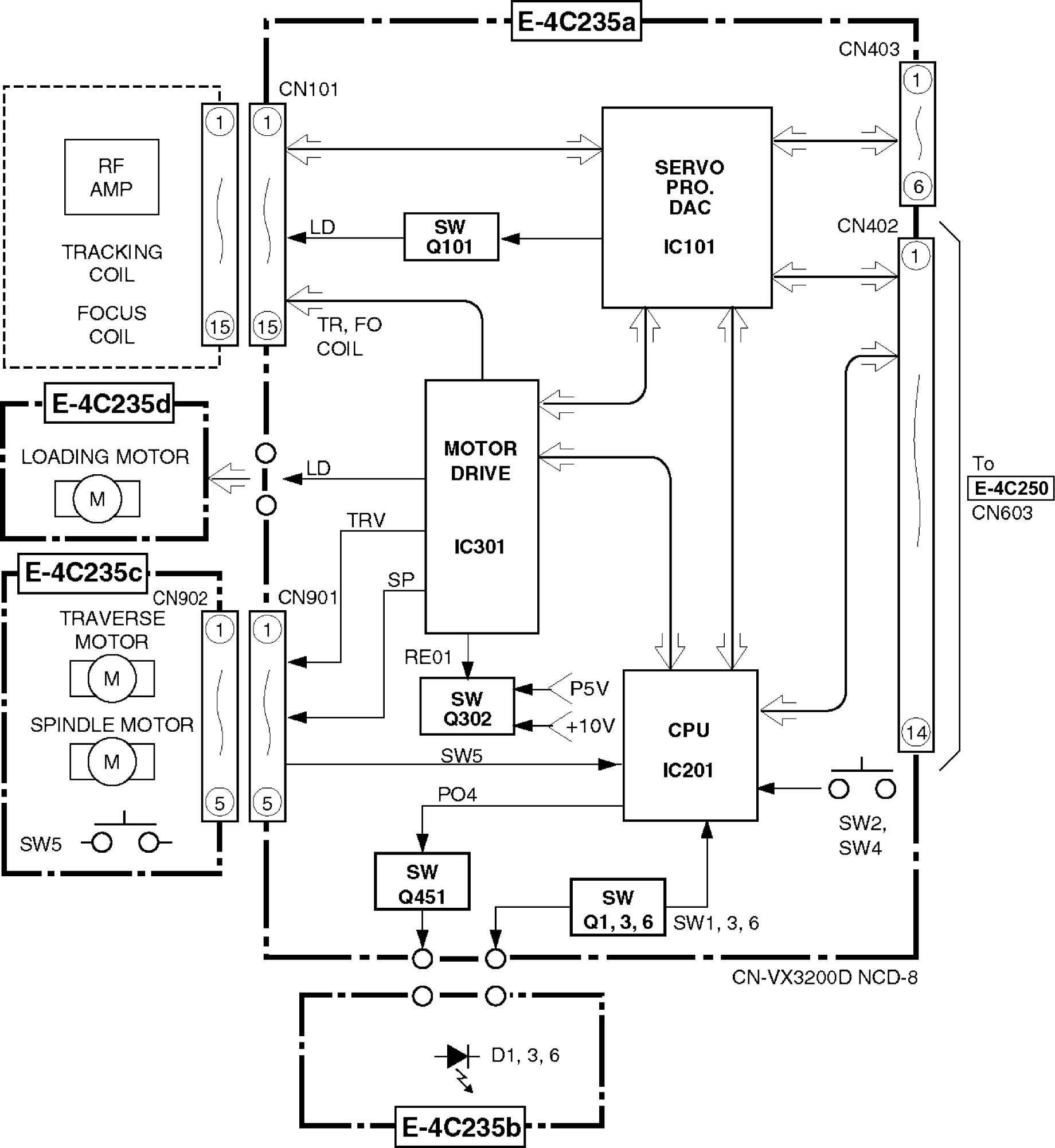
E-4C235a
CN403
CN101
RF AMP
TRACKING COIL
FOCUS COIL
SERVO PRO. DAC
IC101
LD
SW Q101
CN402
TR, FO COIL
E-4C235d
LOADING MOTOR
M
MOTOR DRIVE
IC301
LD
To
E-4C250
CN603
TRV
E-4C235c
CN902
CN901
SP
TRAVERSE MOTOR
M
SPINDLE MOTOR
M
RE01
SW Q302
P5V
+10V
CPU
IC201
SW5
PO4
SW5
SW2, SW4
SW Q451
SW Q1, 3, 6
SW1, 3, 6
CN-VX3200D NCD-8
D1, 3, 6
E-4C235b

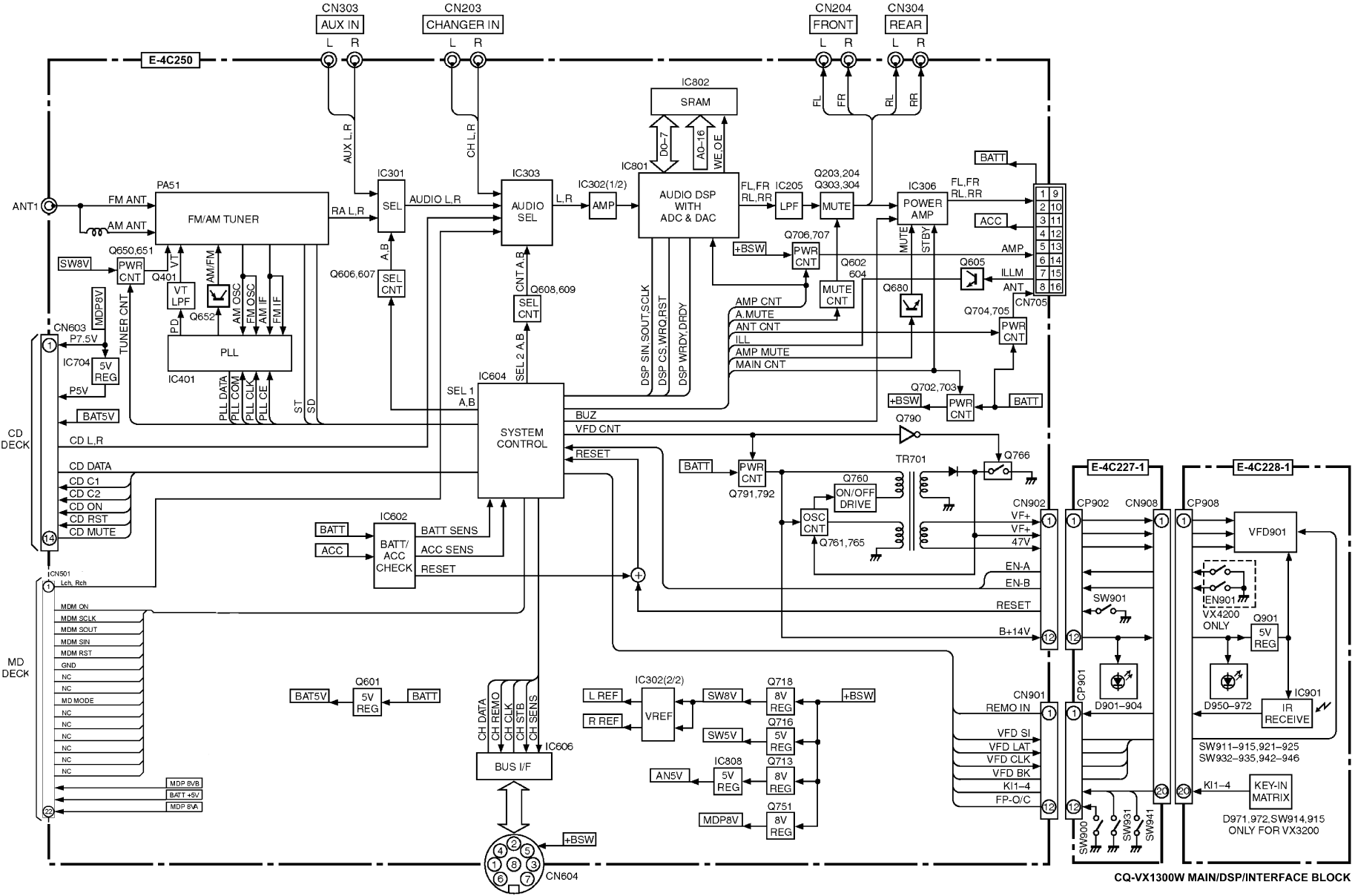

CQ-VX1300W MAIN/DSP/INTERFACE BLOCK

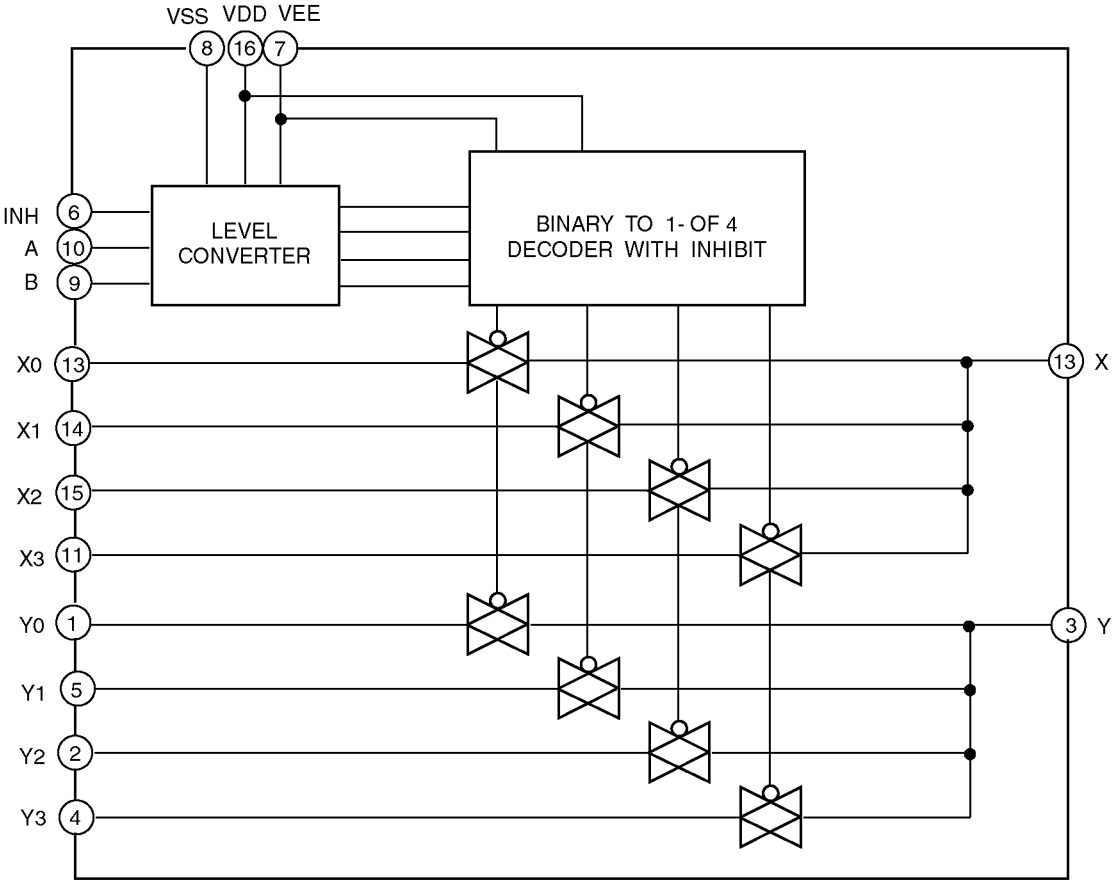
VSS
VDD
VEE
8
16
7
INH
A
B
6
10
9
LEVEL CONVERTER
BINARY TO 1-OF 4 DECODER WITH INHIBIT
X0
X1
X2
X3
Y0
Y1
Y2
Y3
13
14
15
11
1
5
2
4
13
X
3
Y

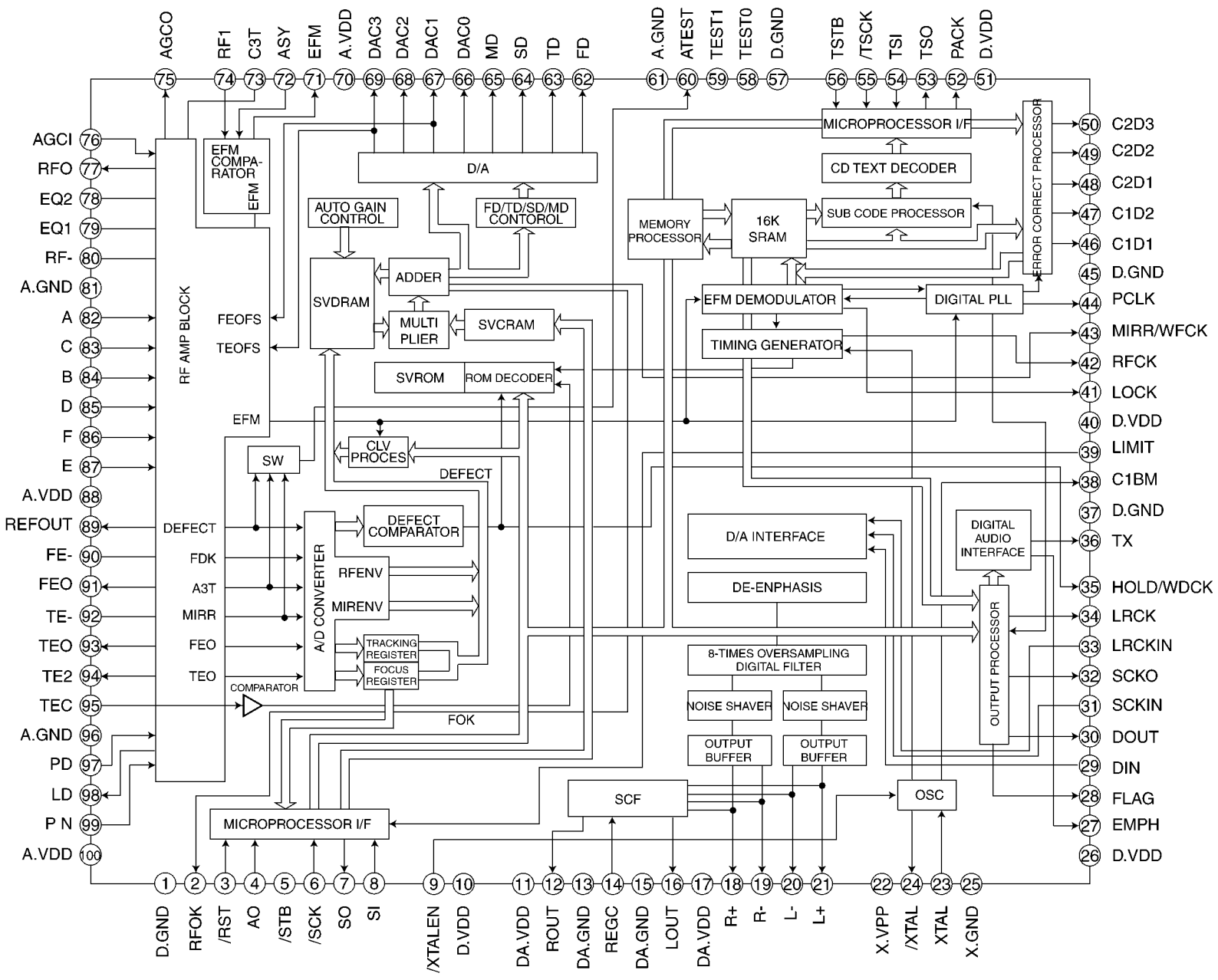
AGCO 75
RF1 74
C3T 73
ASY 72
EFM 71
A.VDD 70
DAC3 69
DAC2 68
DAC1 67
DAC0 66
MD 65
SD 64
TD 63
FD 62
A.GND 61
ATEST 60
TEST1 59
TEST0 58
D.GND 57
TSTB 56
/TSCK 55
TSI 54
TSO 53
PACK 52
D.VDD 51
AGCI 76
RFO 77
EQ2 78
EQ1 79
RF- 80
A.GND 81
A 82
C 83
B 84
D 85
F 86
E 87
A.VDD 88
REFOUT 89
FE- 90
FEO 91
TE- 92
TEO 93
TE2 94
TEC 95
A.GND 96
PD 97
LD 98
P N 99
A.VDD 100
C2D3 50
C2D2 49
C2D1 48
C1D2 47
C1D1 46
D.GND 45
PCLK 44
MIRR/WFCK 43
RFCK 42
LOCK 41
D.VDD 40
LIMIT 39
C1BM 38
D.GND 37
TX 36
HOLD/WDCK 35
LRCK 34
LRCKIN 33
SCKO 32
SCKIN 31
DOUT 30
DIN 29
FLAG 28
EMPH 27
D.VDD 26
D.GND 1
RFOK 2
/RST 3
AO 4
/STB 5
/SCK 6
SO 7
SI 8
/XTALEN 9
D.VDD 10
DA.VDD 11
ROUT 12
DA.GND 13
REGC 14
DA.GND 15
LOUT 16
DA.VDD 17
R+ 18
R- 19
L- 20
L+ 21
X.VPP 22
/XTAL 24
XTAL 23
X.GND 25
RF AMP BLOCK
EFM COMPA-RATOR
EFM
FEOFS
TEOFS
EFM
DEFECT
FDK
A3T
MIRR
FEO
TEO
COMPARATOR
FOK
D/A
AUTO GAIN CONTROL
FD/TD/SD/MD CONTOROL
SVDRAM
ADDER
MULTI PLIER
SVCRAM
SVROM
ROM DECODER
SW
CLV PROCES
DEFECT
DEFECT COMPARATOR
A/D CONVERTER
RFENV
MIRENV
TRACKING REGISTER
FOCUS REGISTER
MICROPROCESSOR I/F
MEMORY PROCESSOR
16K SRAM
MICROPROCESSOR I/F
CD TEXT DECODER
SUB CODE PROCESSOR
ERROR CORRECT PROCESSOR
EFM DEMODULATOR
DIGITAL PLL
TIMING GENERATOR
D/A INTERFACE
DE-ENPHASIS
DIGITAL AUDIO INTERFACE
OUTPUT PROCESSOR
8-TIMES OVERSAMPLING DIGITAL FILTER
NOISE SHAVER
NOISE SHAVER
OUTPUT BUFFER
OUTPUT BUFFER
SCF
OSC
MICROPROCESSOR I/F

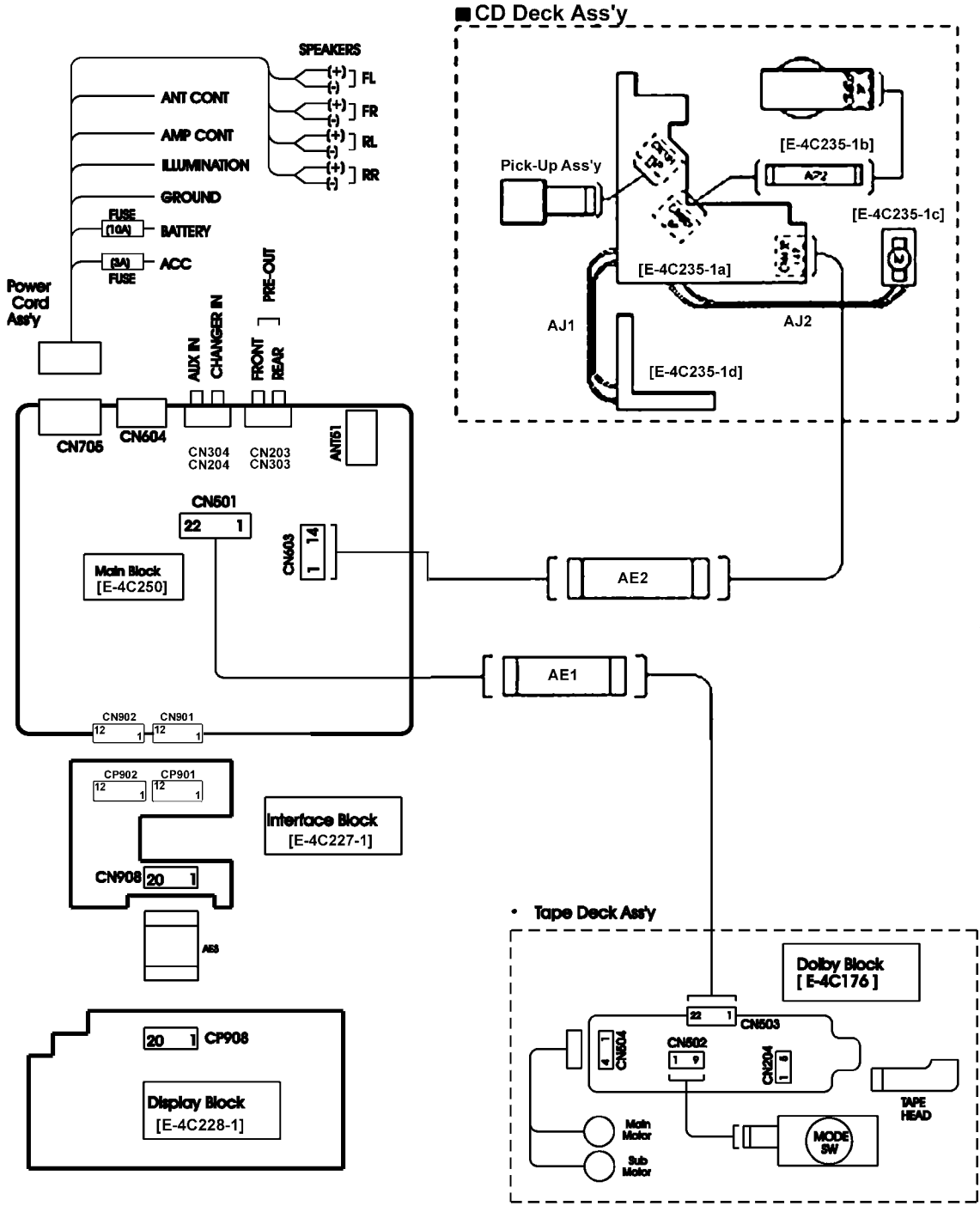
CD Deck Ass'y
SPEAKERS
(+) (-) FL
(+) (-) FR
(+) (-) RL
(+) (-) RR
ANT CONT
AMP CONT
ILLUMINATION
GROUND
FUSE (10A) BATTERY
(3A) FUSE ACC
Power Cord Ass'y
AUX IN
CHANGER IN
PRE-OUT
FRONT
REAR
CN705
CN604
CN304
CN204
CN203
CN303
ANT51
CN501
22 1
CN503
1 14
Main Block [E-4C250]
AE2
AE1
CN902
CN901
12 1
CP902
CP901
Interface Block [E-4C227-1]
CN908
20 1
AES
CP908
Display Block [E-4C228-1]
Pick-Up Ass'y
[E-4C235-1b]
[E-4C235-1c]
[E-4C235-1a]
AJ1
AJ2
[E-4C235-1d]
Tape Deck Ass'y
Dolby Block [E-4C176]
CN503
CN504
CN502
CN204
TAPE HEAD
Main Motor
Sub Motor
MODE SW

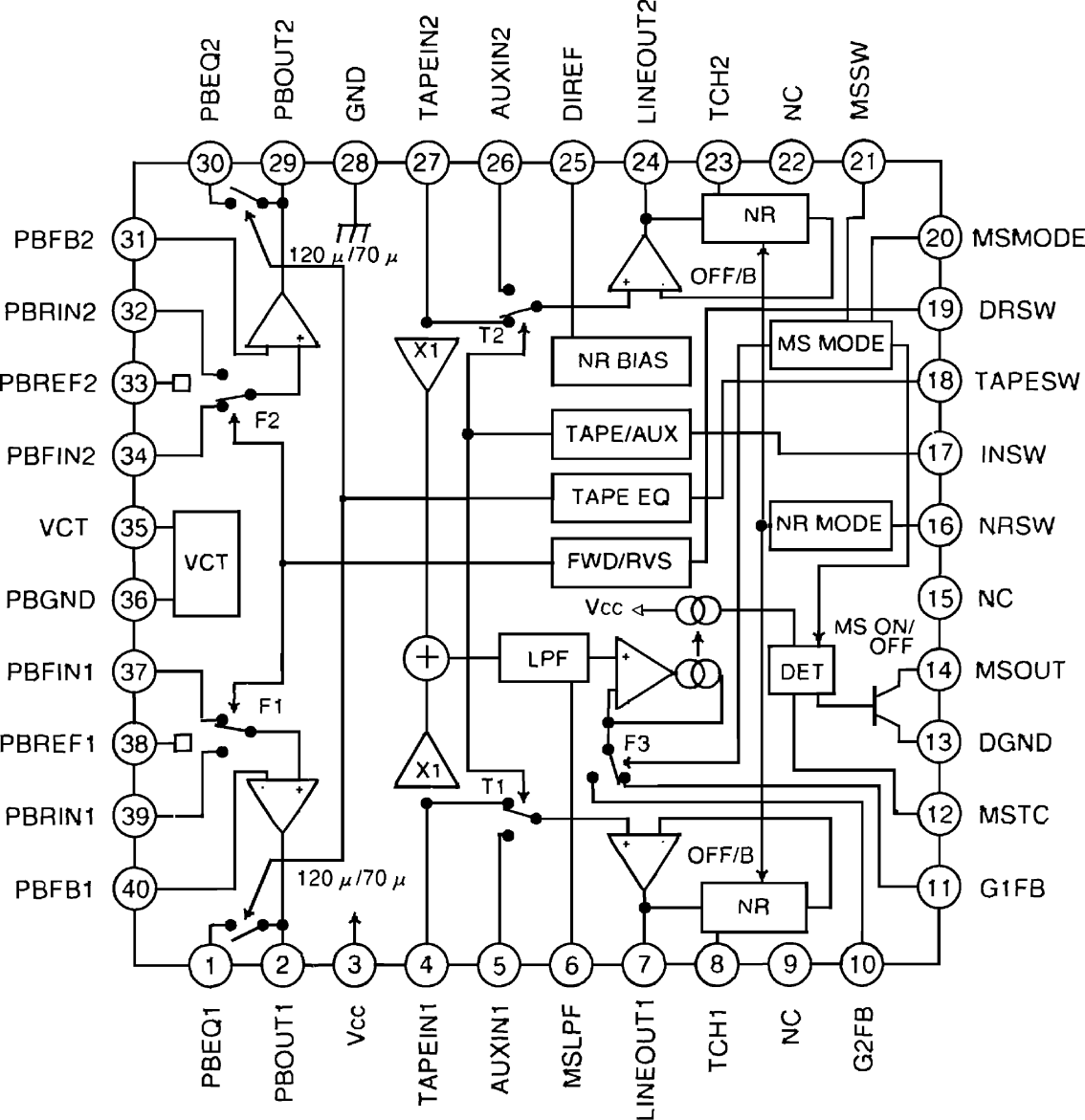
PBEQ2
PBOUT2
GND
TAPEIN2
AUXIN2
DIREF
LINEOUT2
TCH2
NC
MSSW
30
29
28
27
26
25
24
23
22
21
PBFB2
31
PBRIN2
32
PBREF2
33
PBFIN2
34
VCT
35
PBGND
36
PBFIN1
37
PBREF1
38
PBRIN1
39
PBFB1
40
20
MSMODE
19
DRSW
18
TAPESW
17
INSW
16
NRSW
15
NC
14
MSOUT
13
DGND
12
MSTC
11
G1FB
120 μ/70 μ
F2
F1
VCT
X1
T2
T1
NR BIAS
TAPE/AUX
TAPE EQ
FWD/RVS
NR
OFF/B
MS MODE
NR MODE
Vcc
LPF
DET
MS ON/
OFF
F3
1
2
3
4
5
6
7
8
9
10
PBEQ1
PBOUT1
Vcc
TAPEIN1
AUXIN1
MSLPF
LINEOUT1
TCH1
NC
G2FB

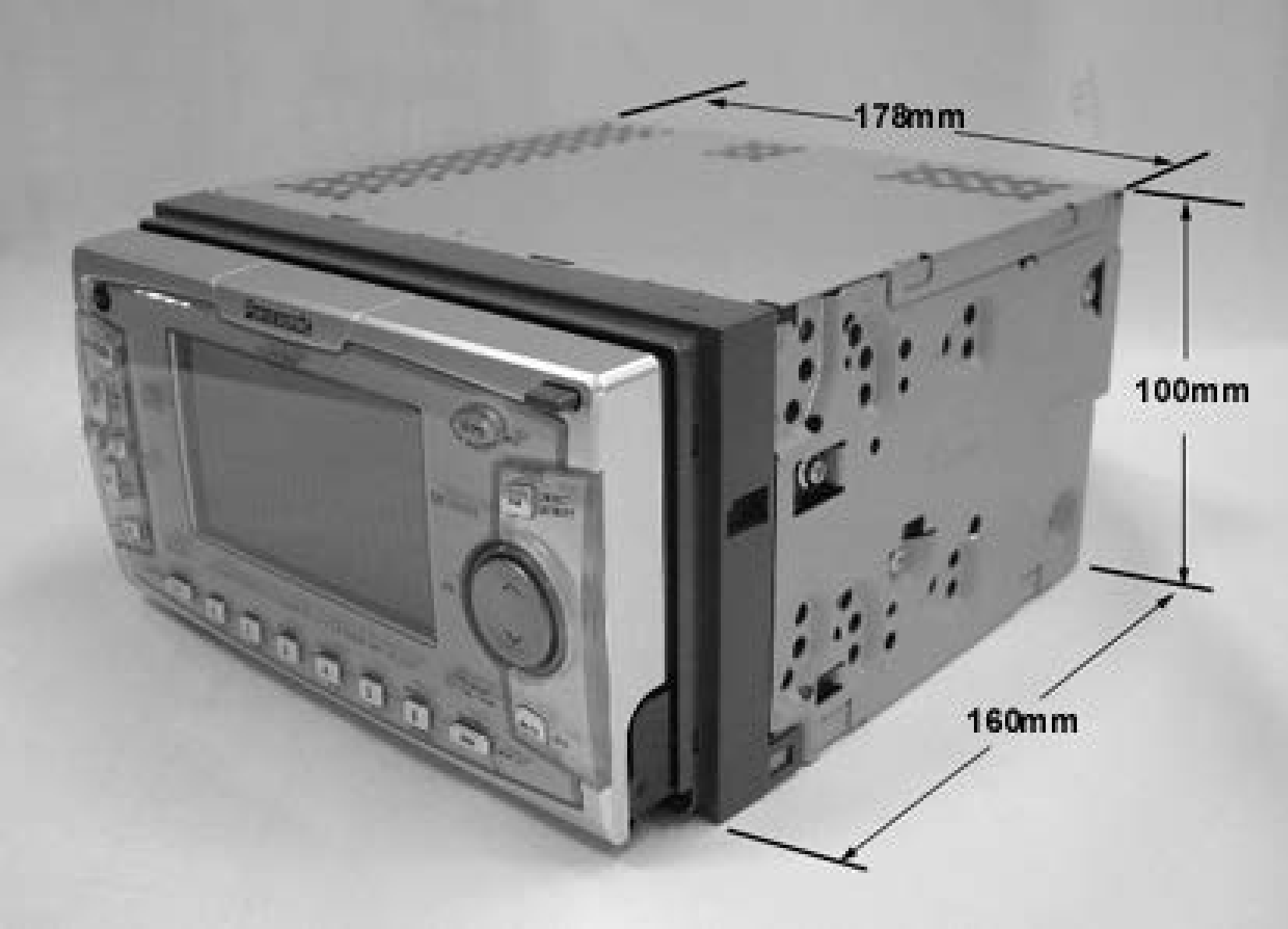
178mm
100mm
160mm

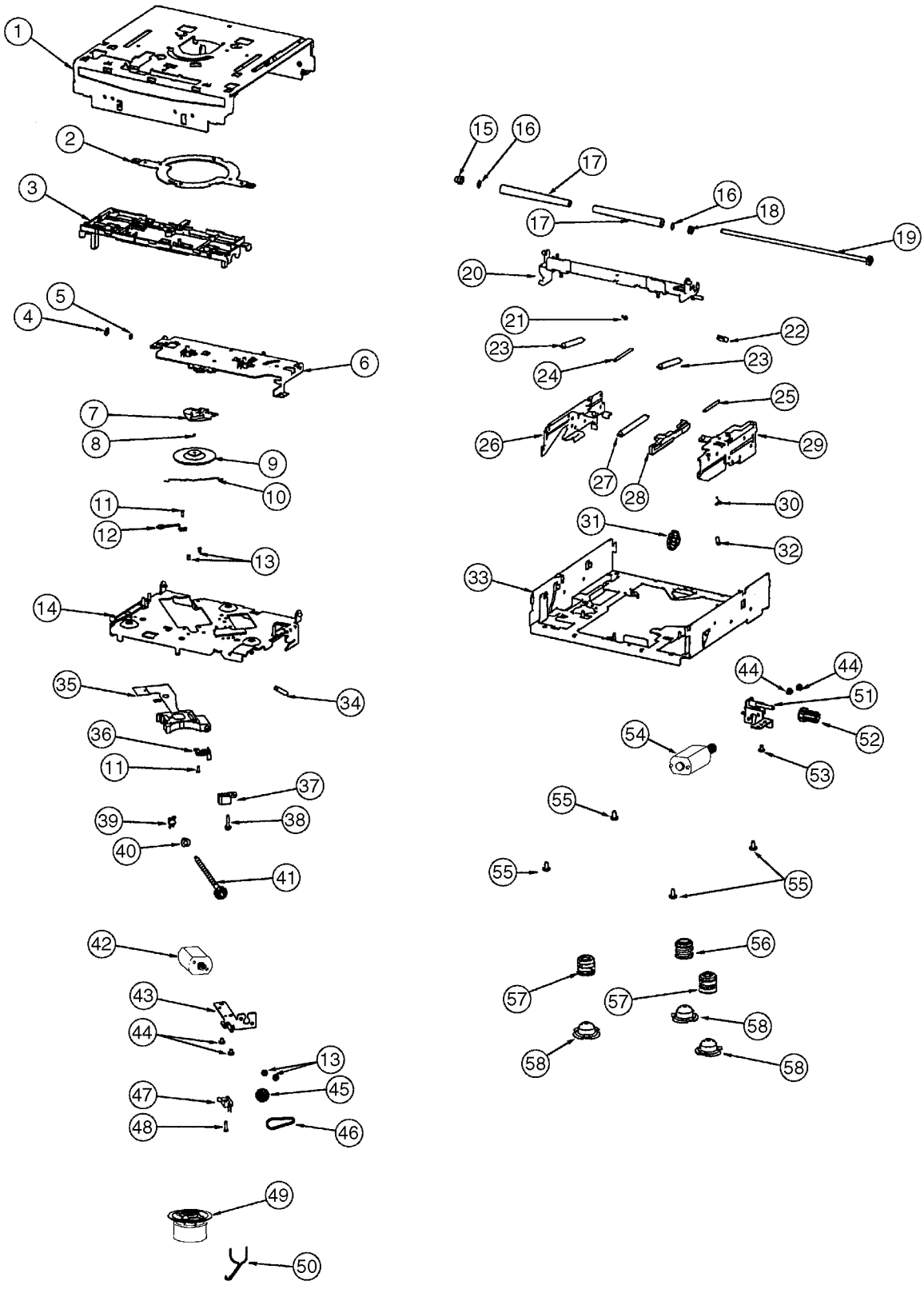

2001.7.1
NCD-8 改

■ Numbers in ○ are indicated REF.No.in the REPLACEMENT PARTS LIST

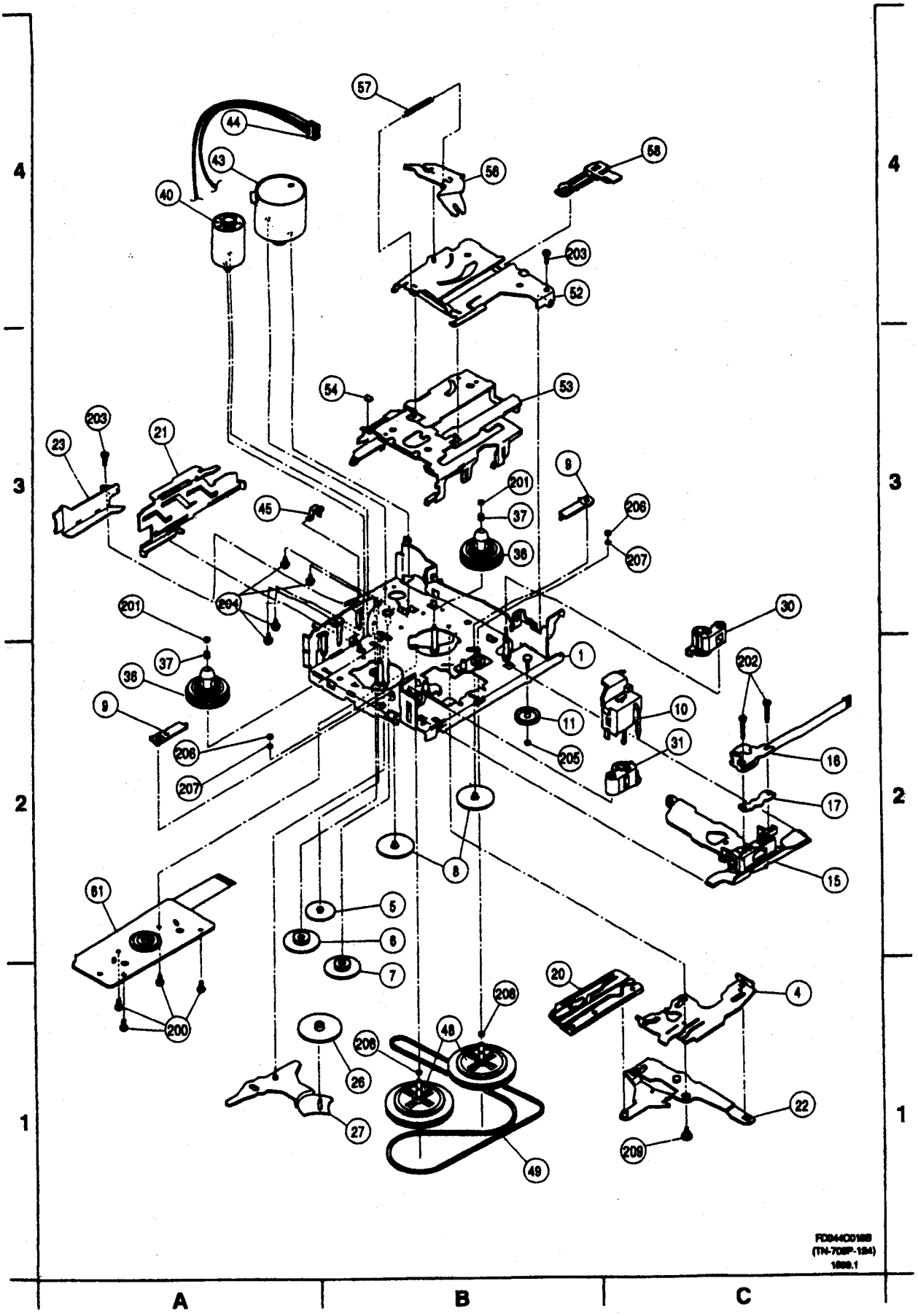

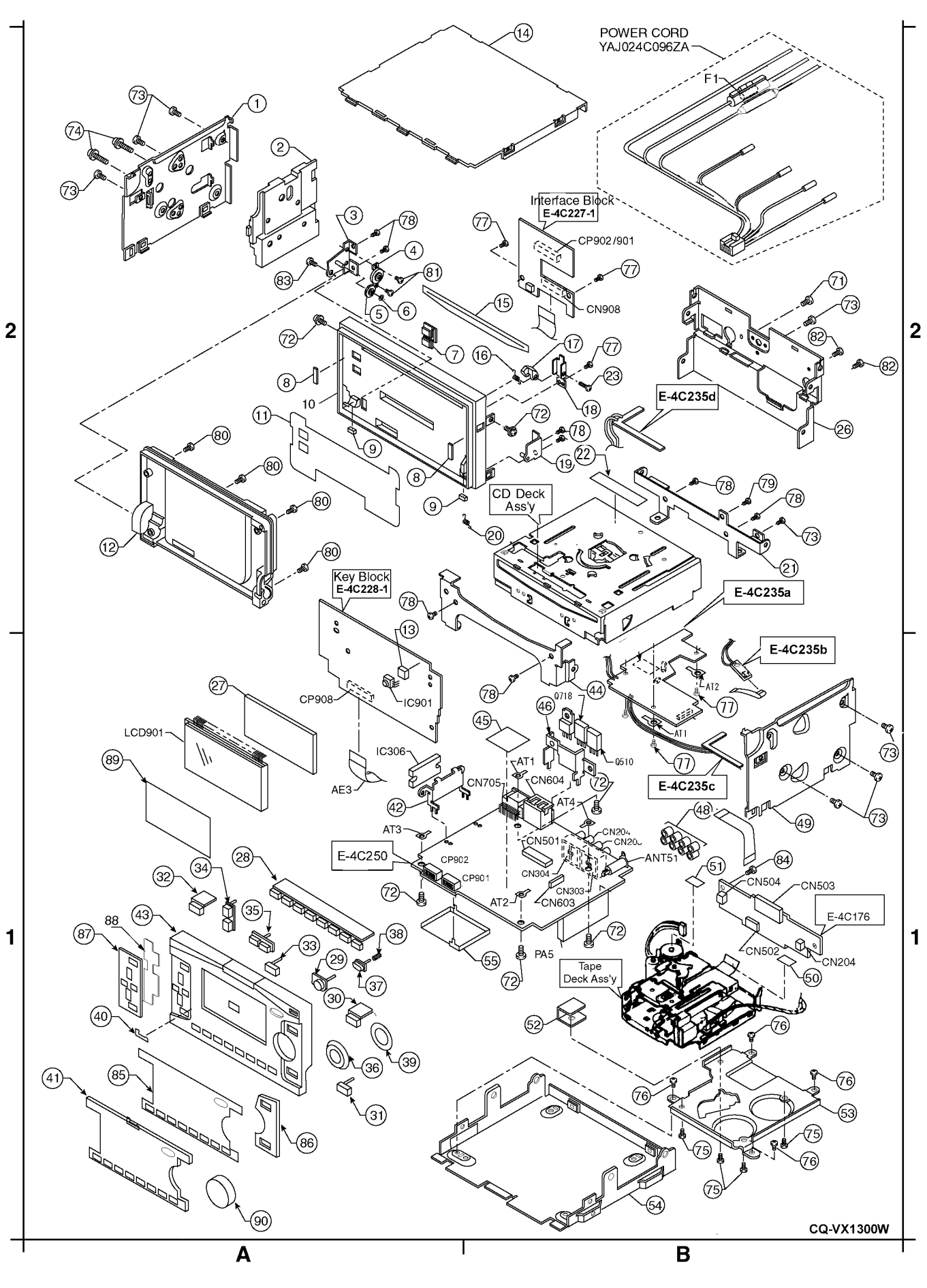
POWER CORD
YAJ024C096ZA
F1
Interface Block
E-4C227-1
CP902/901
CN908
E-4C235d
CD Deck
Ass'y
E-4C235a
Key Block
E-4C228-1
CP908
IC901
E-4C235b
E-4C235c
LCD901
IC306
AE3
CN705
CN604
Q718
Q510
AT1
AT2
AT3
AT4
CN501
CN204
CN203
ANT51
E-4C250
CP902
CP901
CN304
CN303
CN603
PA5
CN504
CN503
E-4C176
CN502
CN204
Tape
Deck Ass'y
CQ-VX1300W
A
B
1
2

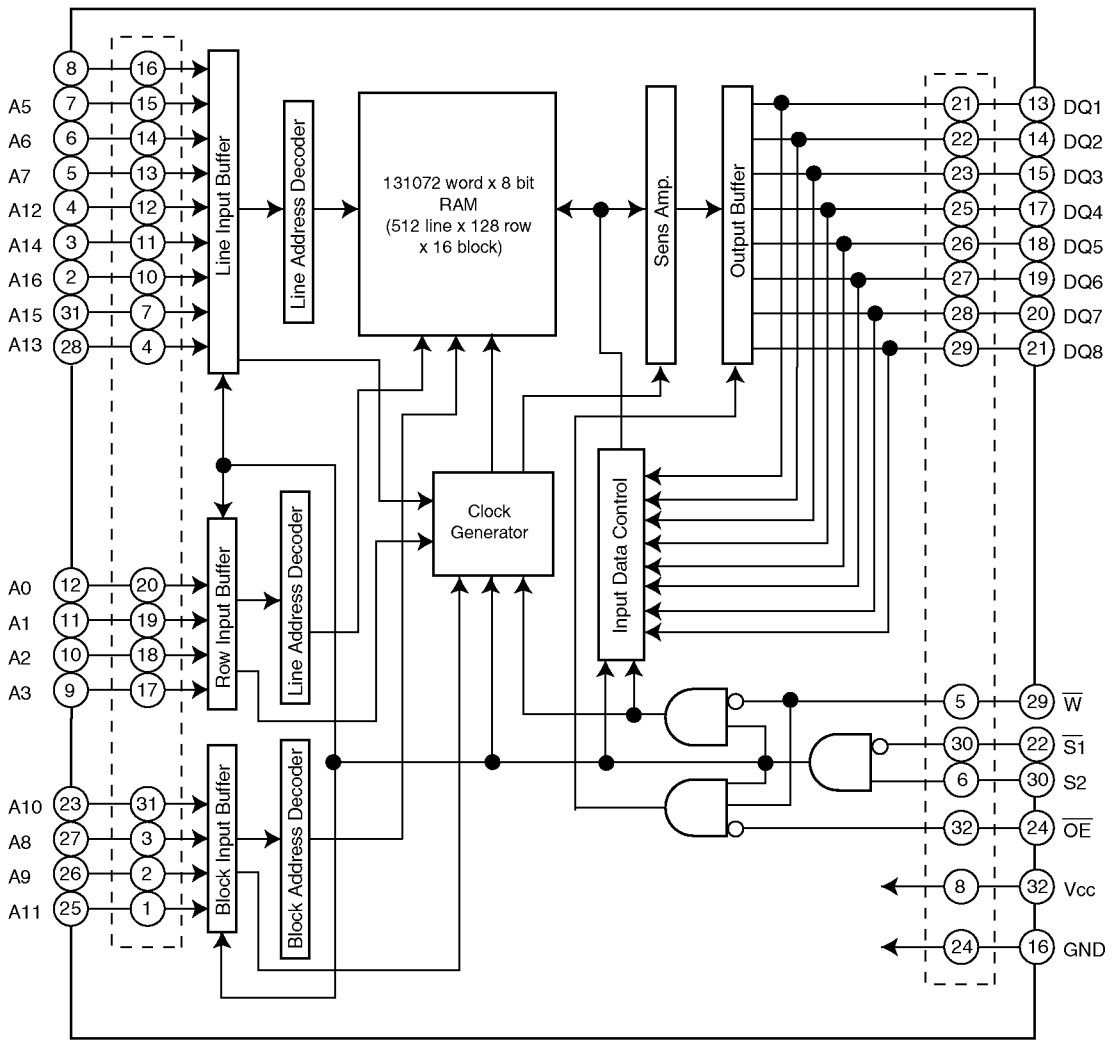
A5
A6
A7
A12
A14
A16
A15
A13
A0
A1
A2
A3
A10
A8
A9
A11
Line Input Buffer
Row Input Buffer
Block Input Buffer
Line Address Decoder
Line Address Decoder
Block Address Decoder
131072 word x 8 bit
RAM
(512 line x 128 row
x 16 block)
Clock
Generator
Sens Amp.
Output Buffer
Input Data Control
DQ1
DQ2
DQ3
DQ4
DQ5
DQ6
DQ7
DQ8
W
S1
S2
OE
Vcc
GND

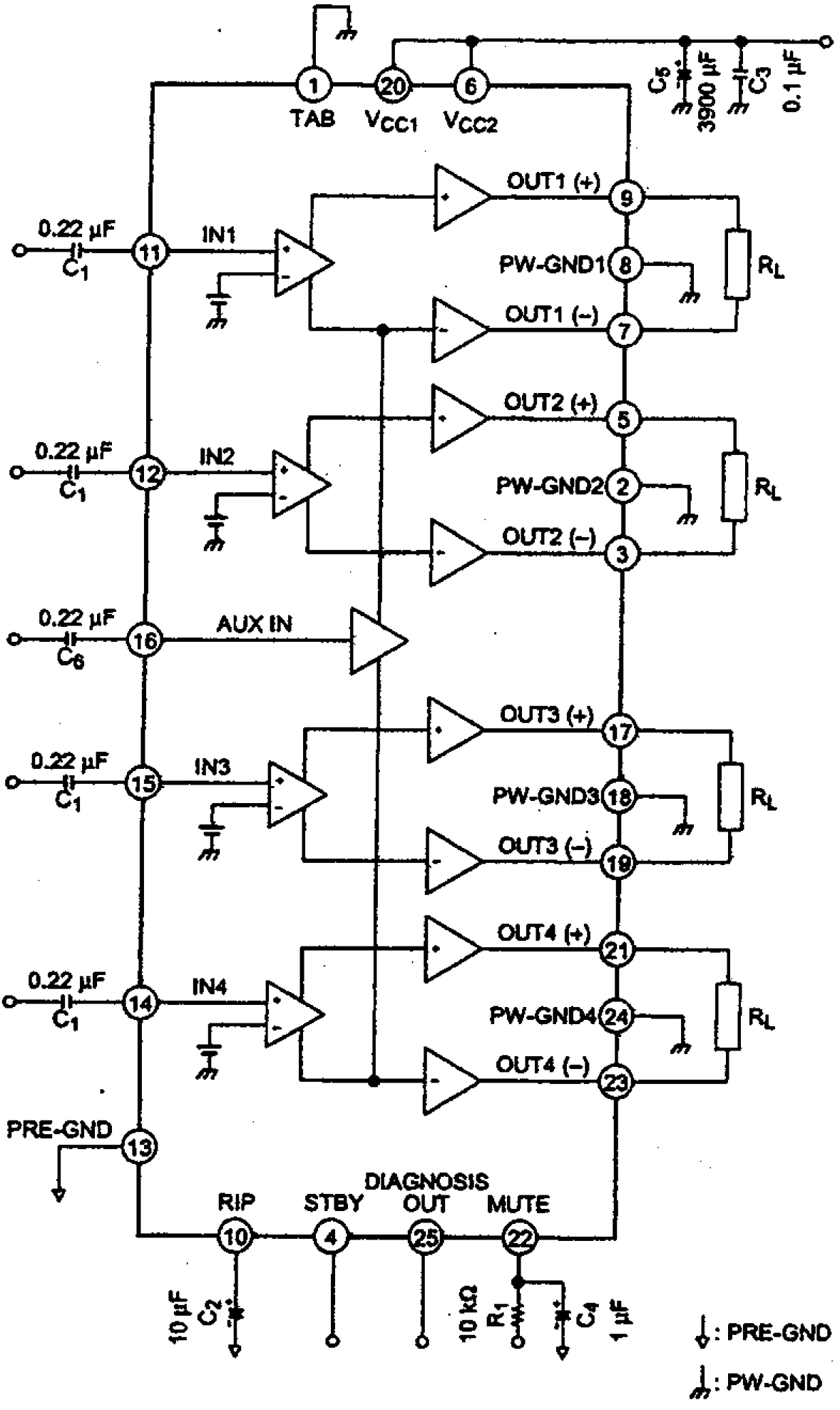
TAB
VCC1
VCC2
C5
3900 µF
C3
0.1 µF
OUT1 (+)
PW-GND1
OUT1 (−)
OUT2 (+)
PW-GND2
OUT2 (−)
OUT3 (+)
PW-GND3
OUT3 (−)
OUT4 (+)
PW-GND4
OUT4 (−)
0.22 µF
C1
C6
IN1
IN2
IN3
IN4
AUX IN
RL
PRE-GND
RIP
STBY
DIAGNOSIS OUT
MUTE
10 µF
C2
10 kΩ
R1
C4
1 µF
: PRE-GND
: PW-GND

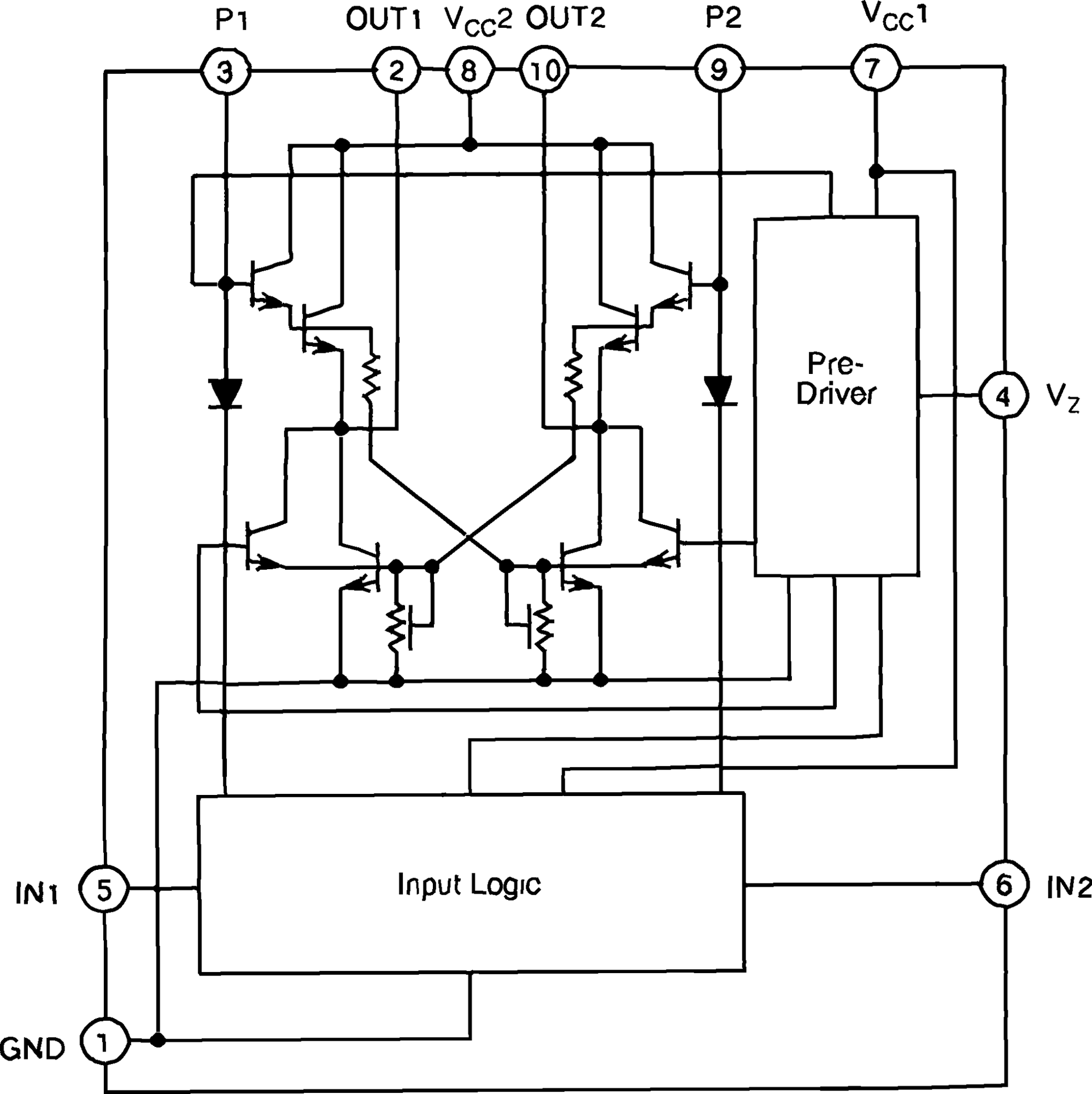
P1
OUT1
$V_{CC}2$
OUT2
P2
$V_{CC}1$
3
2
8
10
9
7
Pre-
Driver
4
V_Z
IN1
5
Input Logic
6
IN2
GND
1

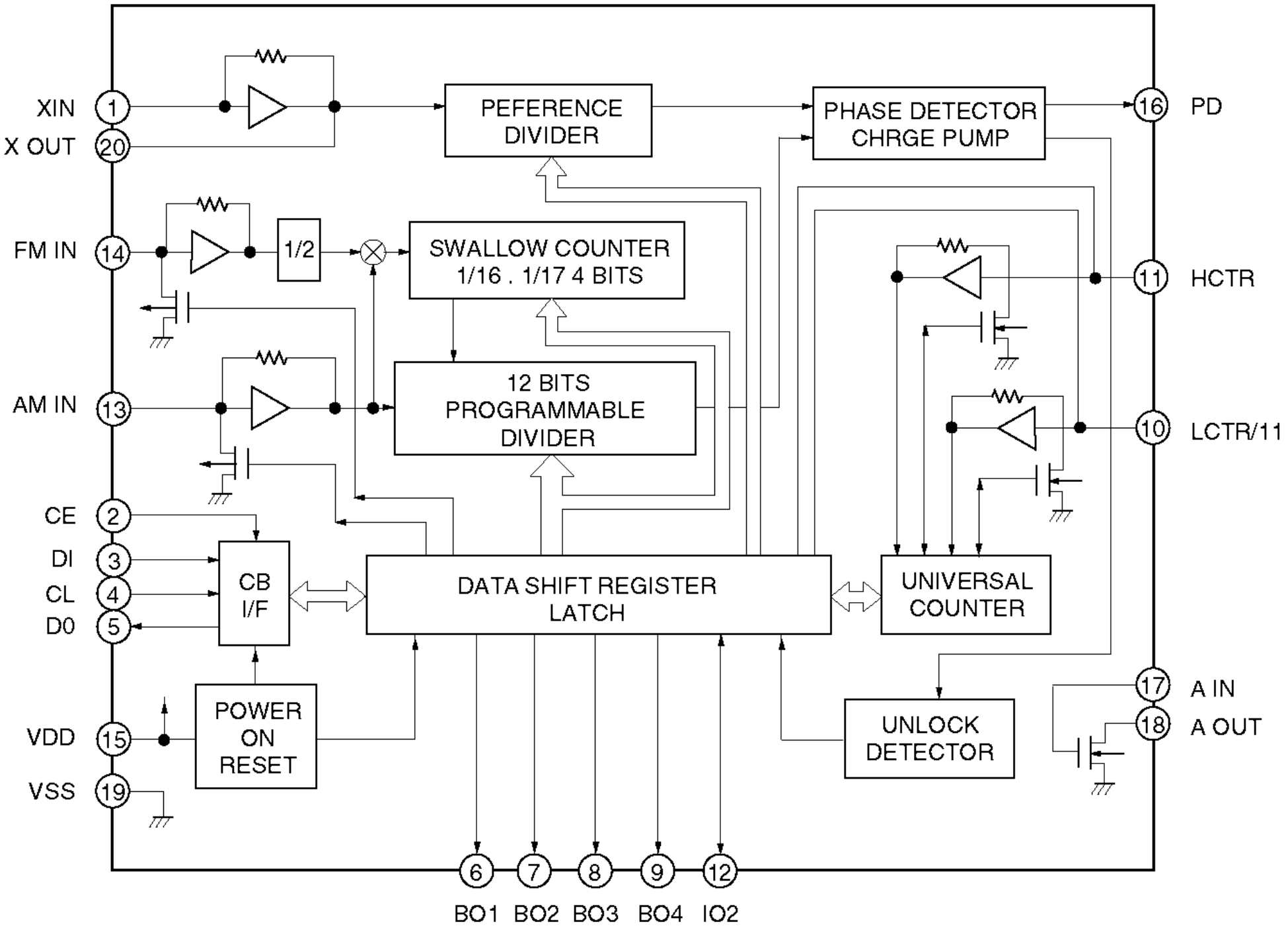
XIN
X OUT
FM IN
AM IN
CE
DI
CL
D0
VDD
VSS
PEFERENCE DIVIDER
PHASE DETECTOR CHRGE PUMP
PD
1/2
SWALLOW COUNTER 1/16 . 1/17 4 BITS
12 BITS PROGRAMMABLE DIVIDER
HCTR
LCTR/11
CB I/F
DATA SHIFT REGISTER LATCH
UNIVERSAL COUNTER
POWER ON RESET
UNLOCK DETECTOR
A IN
A OUT
BO1
BO2
BO3
BO4
IO2

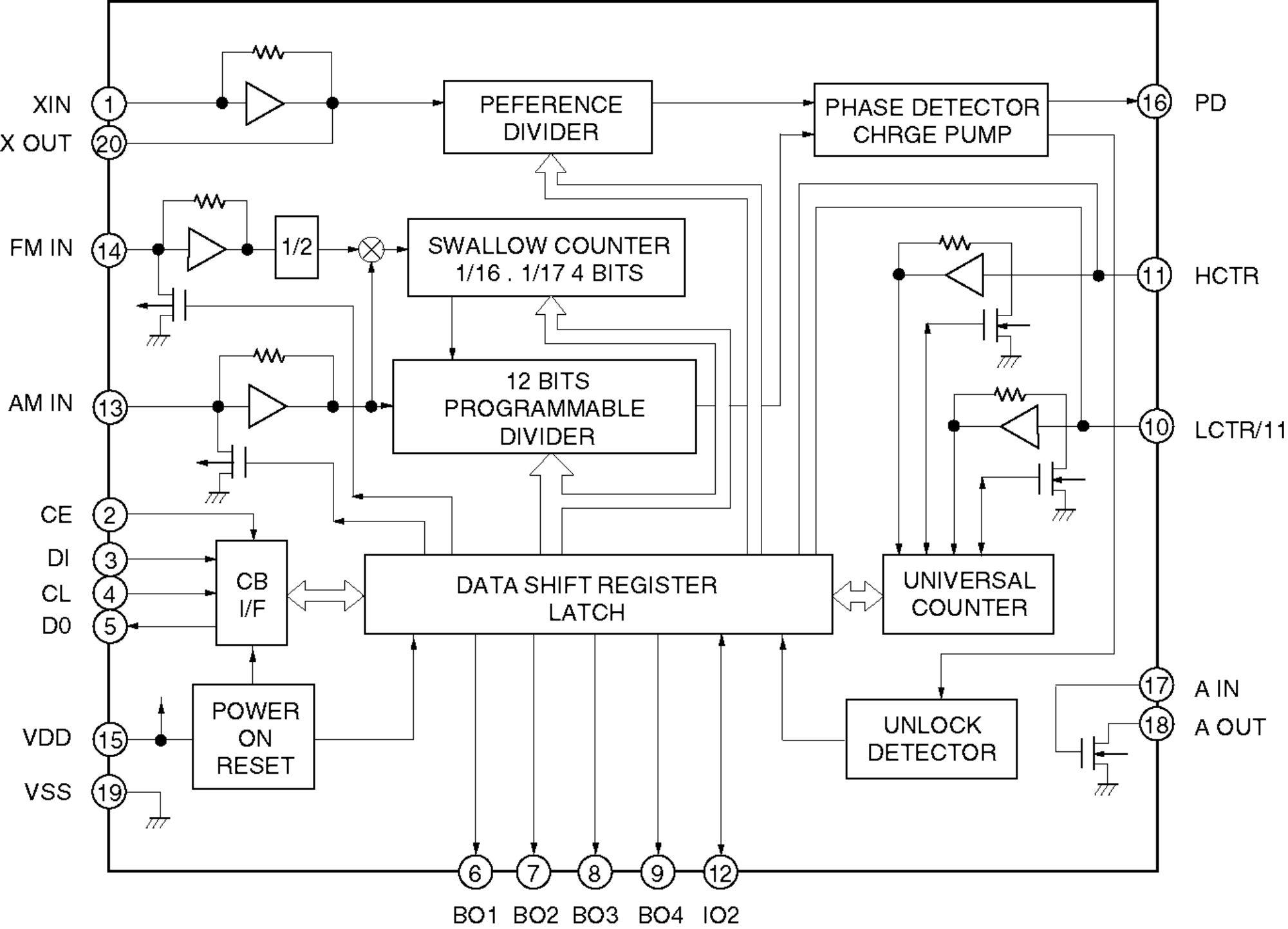
XIN
1
X OUT
20
PEFERENCE DIVIDER
PHASE DETECTOR CHRGE PUMP
16
PD
FM IN
14
1/2
SWALLOW COUNTER 1/16 . 1/17 4 BITS
11
HCTR
AM IN
13
12 BITS PROGRAMMABLE DIVIDER
10
LCTR/11
CE
2
DI
3
CL
4
D0
5
CB I/F
DATA SHIFT REGISTER LATCH
UNIVERSAL COUNTER
17
A IN
18
A OUT
VDD
15
POWER ON RESET
UNLOCK DETECTOR
VSS
19
6
7
8
9
12
BO1
BO2
BO3
BO4
IO2

CAUTION:

This product utilizes a laser diode with the unit turned "on", laser radiation is emitted from the pickup lens.

Laser radiation from the pickup lens is safety level, but be sure the followings:

1. Do not disassemble the optical pickup unit, since radiation from exposed laser diode is dangerous.
2. Do not adjust the variable resistor on the pickup unit. It was already adjusted.
3. Do not look at the focus lens using optical instruments.
4. Recommend not to look at pickup lens for a long time.

DANGER! Invisible laser radiation when open. Avoid direct exposure to beam.

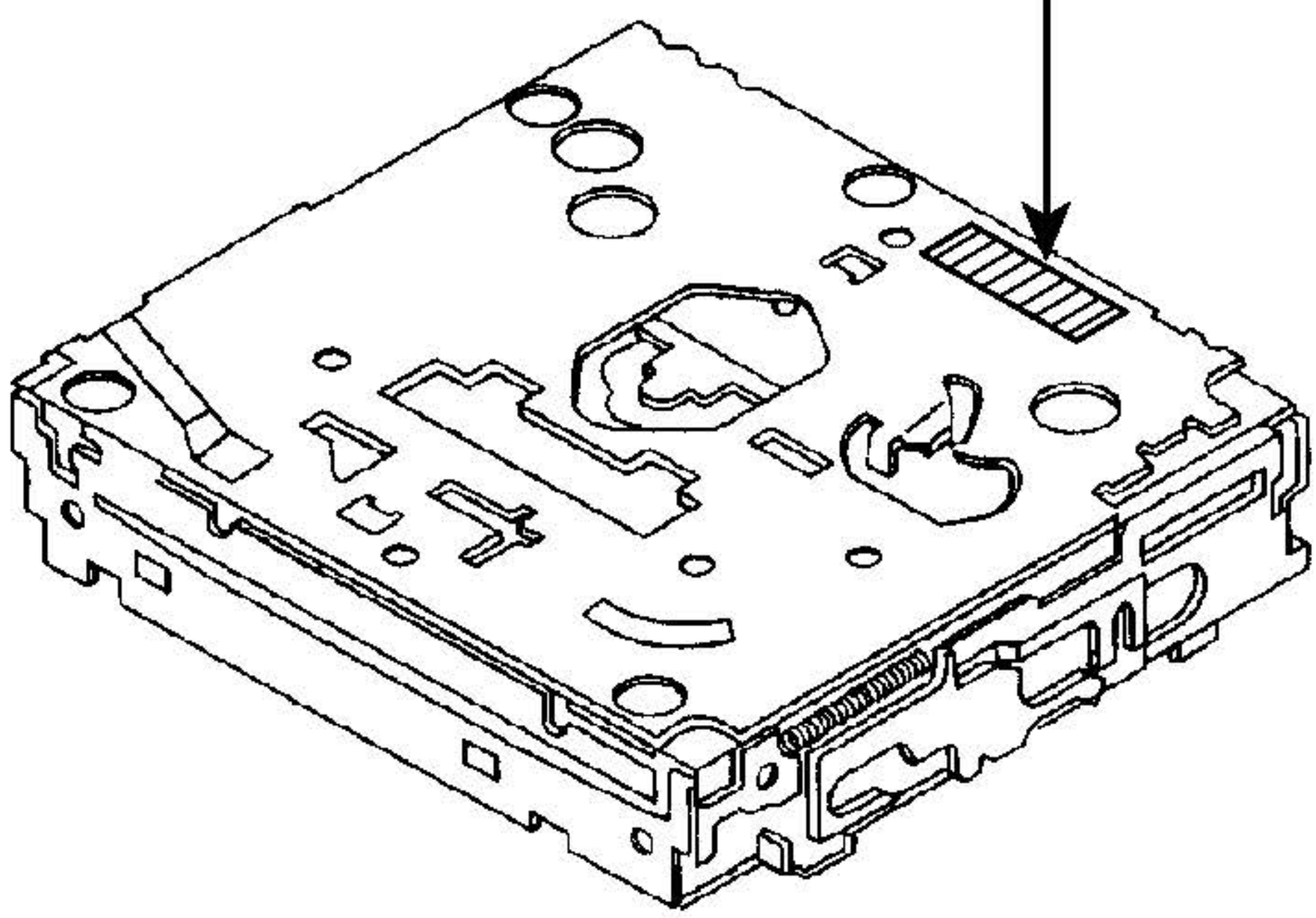

Deck Ass'y (Upper Side)

Caution

This Product utilizes a laser.

Use of controls or adjustments or performance of procedures other than those specified herein may result in hazardous radiation exposure.

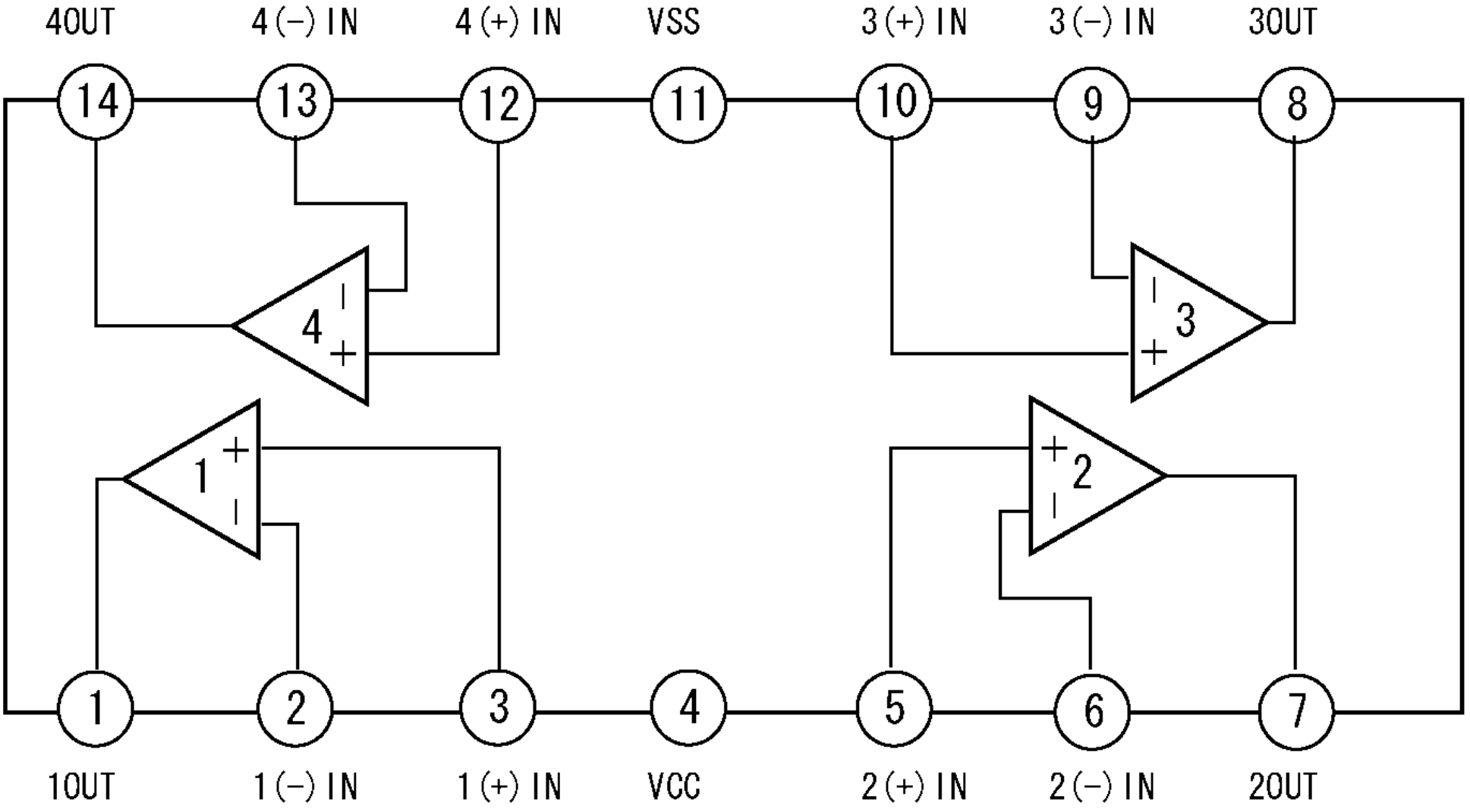
4OUT
4(−) IN
4(+) IN
VSS
3(+) IN
3(−) IN
3OUT
14
13
12
11
10
9
8
4
3
1
2
1
2
3
4
5
6
7
1OUT
1(−) IN
1(+) IN
VCC
2(+) IN
2(−) IN
2OUT

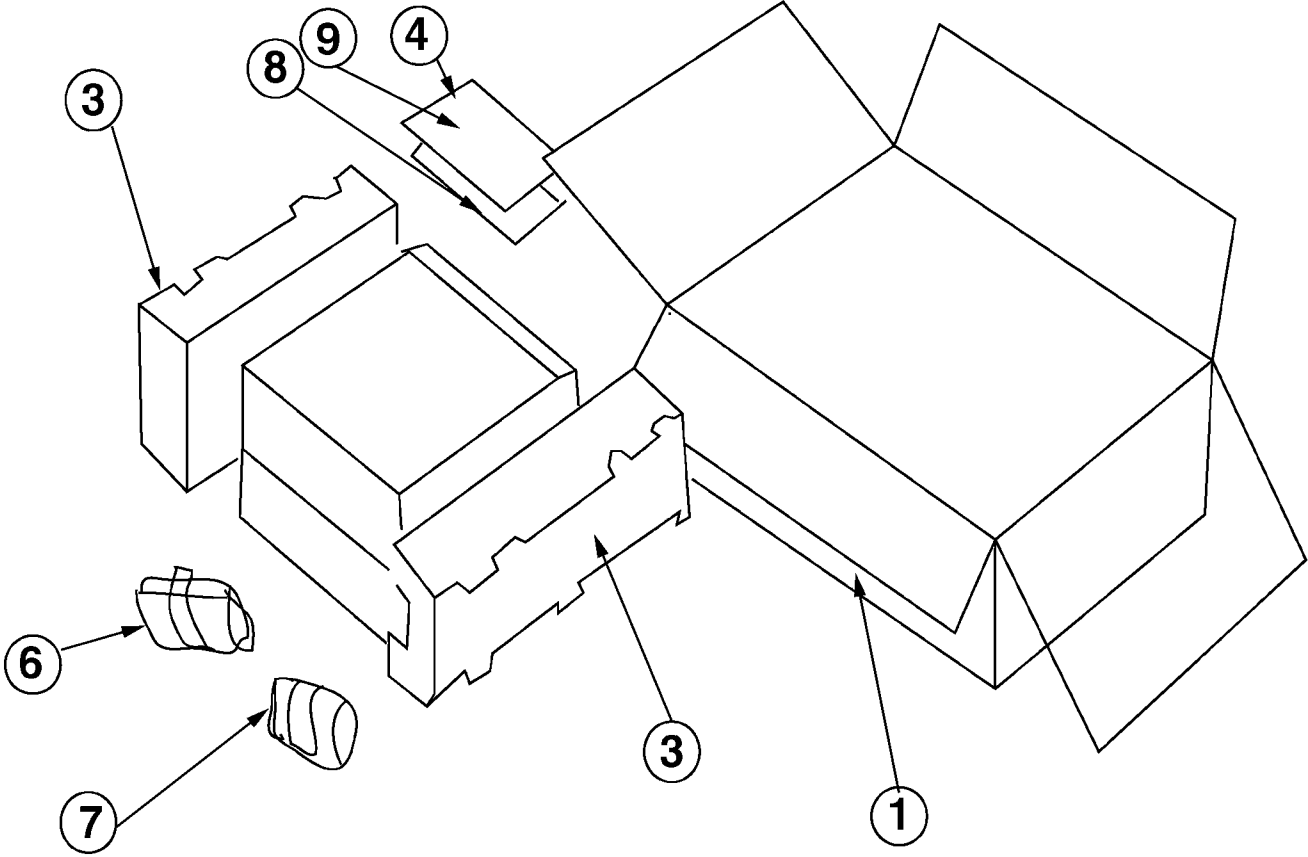

● *Item numbers listed below should not order regular spare parts. (not available)*

Item No.	Parts No.	Parts Name & Description	Q'ty	Remarks
①	—	Inner Carton	1	Not available
③	—	Paking Pad, Rihgt and Left	1	Not available
④	ZZPRVX2200EU	Operating Instructions Kit	1	Not available
	YFM074C135ZA	Warranty Application Card	(1)	Not avaiable
	YFM284C366ZA	Operating Instructions	(1)	
	YFM074C124CA	Warranty Card	(1)	Not avaiable
	YFM094C023CA	Servicenter List	(1)	Not avaiable
⑤	YFM074C135ZA	Warranty Application Card	(1)	Not avaiable
⑥	YAJ024C089ZA	Power Connector Ass'y	1	
⑦	ZZBISVX404MD	Screw Kit	1	
⑧	ZZPRVX2000EC	Operating Instructions Kit	1	Not avaiable
	YFM074C133CA	Warranty Card	(1)	Not avaiable
	YFM094C018CA	Servicenter List	(1)	Not avaiable
	YFM024C196CA	Canada Label	(1)	Not avaiable
⑨	YEFX9992012	Remote Control	(1)	Not avaiable

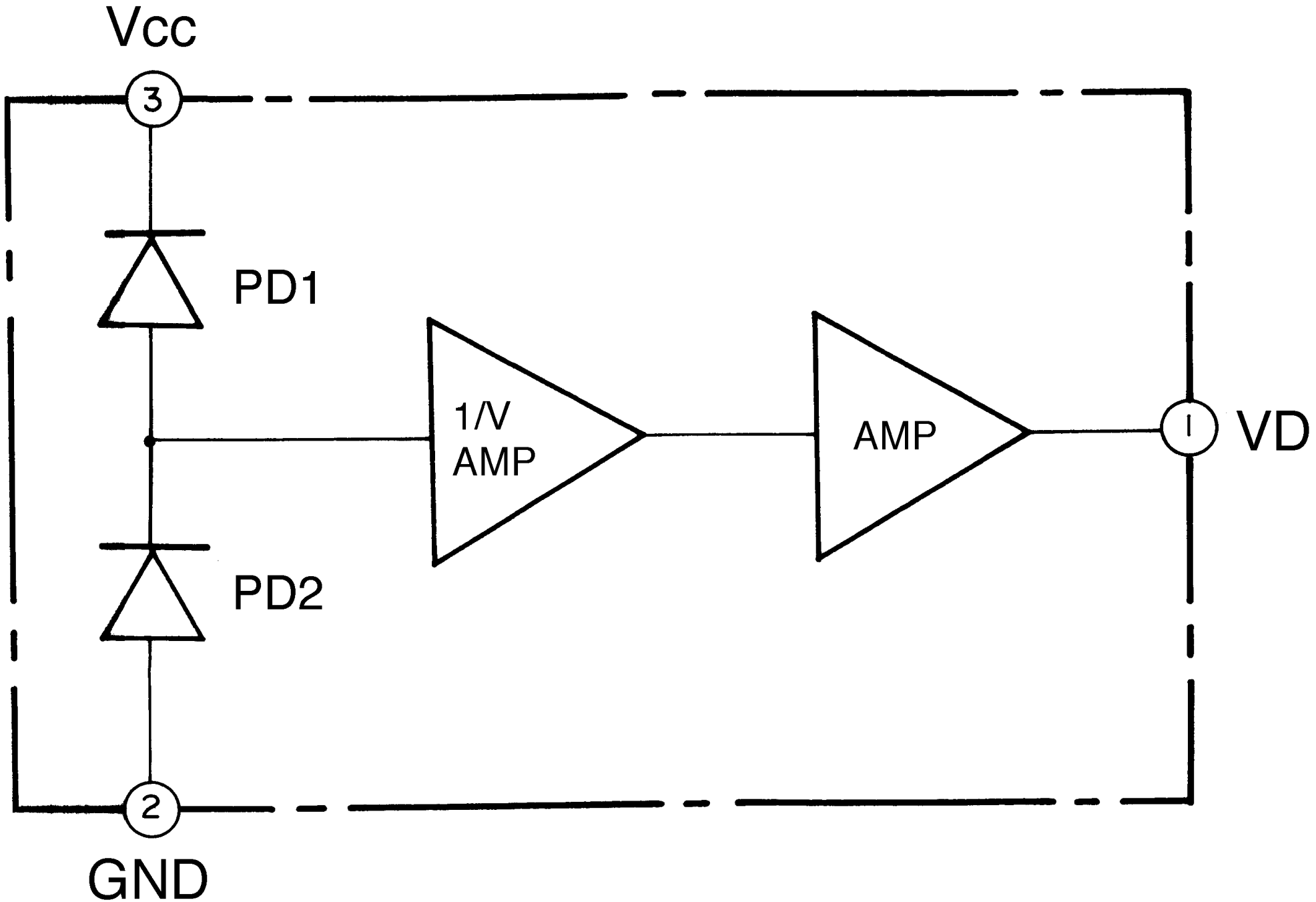
Vcc
3
PD1
1/V
AMP
AMP
1
VD
PD2
2
GND

Note:

1. Be sure to make your orders of replacement parts according to this list.
2. Important safty notice: Component , indentified by ⚠ mark have special characteristics important for safety. when replacing any of these components, use only manufacturer's specified parts.
3. Location keys in the remarks column indicates the general location of the parts shown in the exploded drawing. as in a load map.
4. The marking (RTL) indicates that Retention Time is linited for this item. After the discontinuation of assembly in production, the item will continue to be availability is dependent on the type of assembly, and in accordance with the laws governing part and product retention. Aft the end of this period, the assembly will no longer be available.
5. "A" marks in remarks colum are indicated supply parts of Audio Division(AD) in Matsushita Electric Industrial Co., Ltd.(MEI)
6. "V" marks in remarks colum are indicated supply parts of Vidio System Division(VSD) in Matsushita Electric industrial Co., Ltd. (MEI)

Note:

1. Be sure to make your orders of replacement parts according to this list.
2. Important safty notice: Component , indentified by ⚠ mark have special characteristics important for safety. when replacing any of these components, use only manufacturer's specified parts.
3. Location keys in the remarks column indicates the general location of the parts shown in the exploded drawing. as in a load map.
4. The marking (RTL) indicates that Retention Time is limited for this item. After the discontinuation of assembly in production, the item will continue to be availability is dependent on the type of assembly, and in accordance with the laws governing part and product retention. Aft the end of this period, the assembly will no longer be available.
5. "T" marks in remarks colum are indicated supply parts of TAMACO.

Note:

1. Be sure to make your orders of replacement parts according to this list.
2. Important safty notice: Component , indentified by ⚠ mark have special characteristics important for safety. when replacing any of these components, use only manufacturer's specified parts.
3. Location keys in the remarks column indicates the general location of the parts shown in the exploded drawing. as in a load map.
4. "T" marks in remarks colum are indicated supply parts of TAMACO.

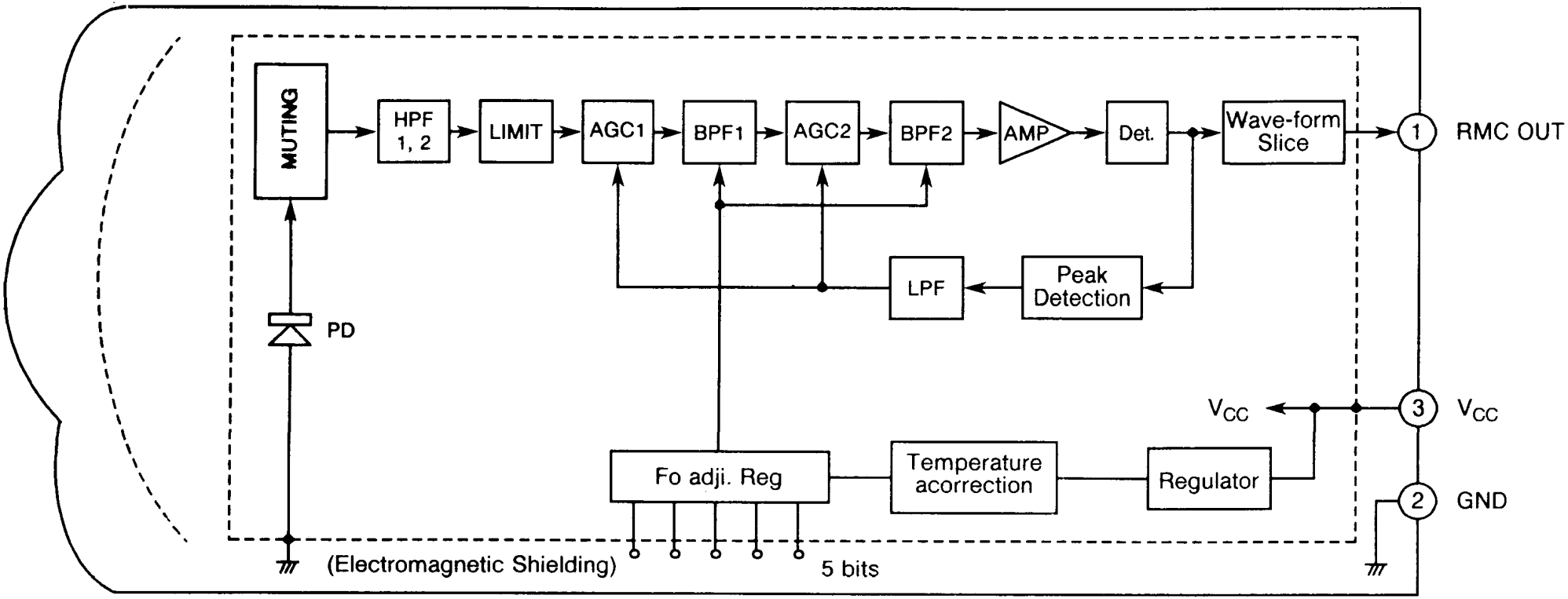
MUTING
HPF 1, 2
LIMIT
AGC1
BPF1
AGC2
BPF2
AMP
Det.
Wave-form Slice
1
RMC OUT
LPF
Peak Detection
PD
VCC
3
VCC
Fo adji. Reg
Temperature acorrection
Regulator
2
GND
(Electromagnetic Shielding)
5 bits

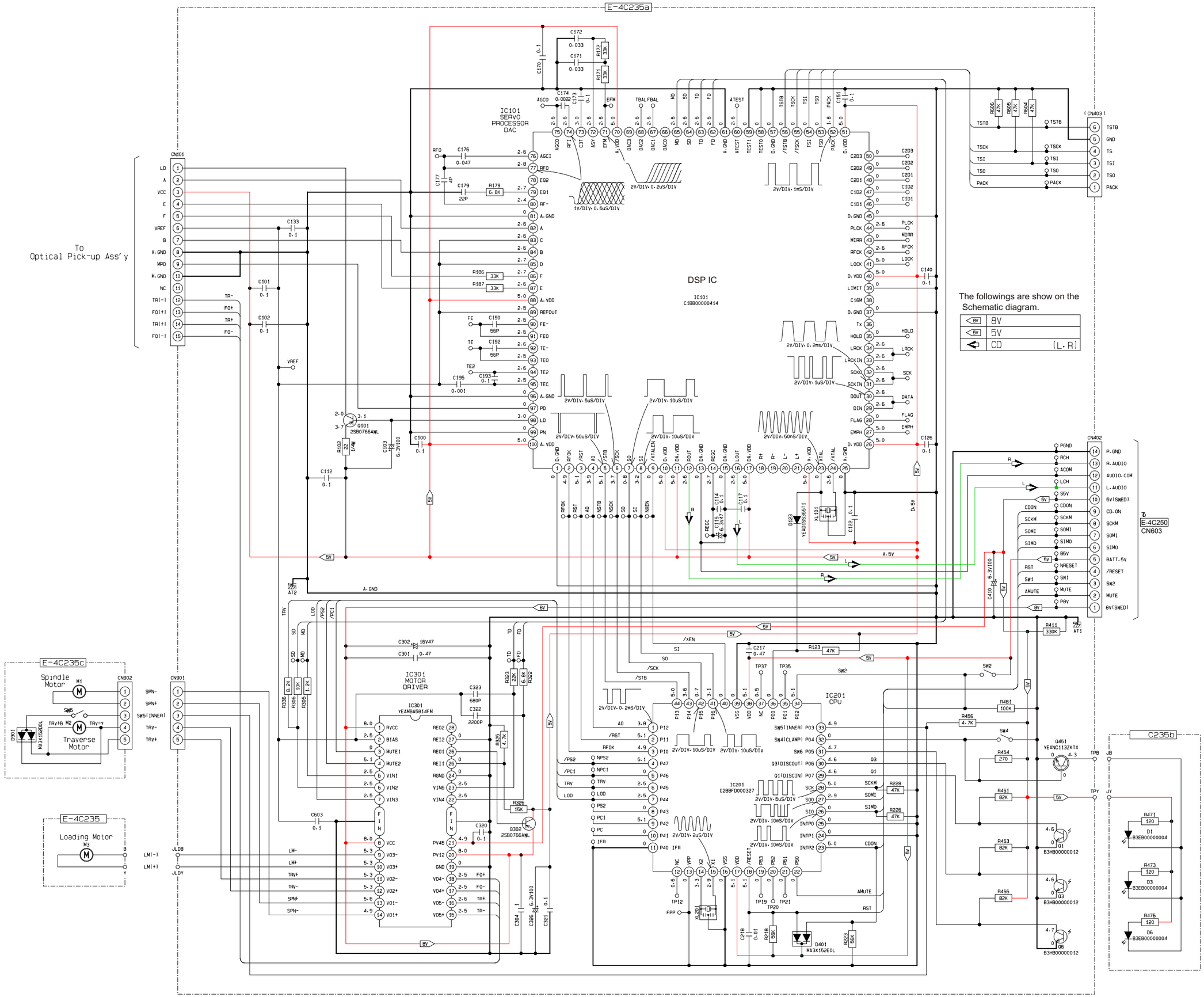

CQ-VX1300W CD Servo Block

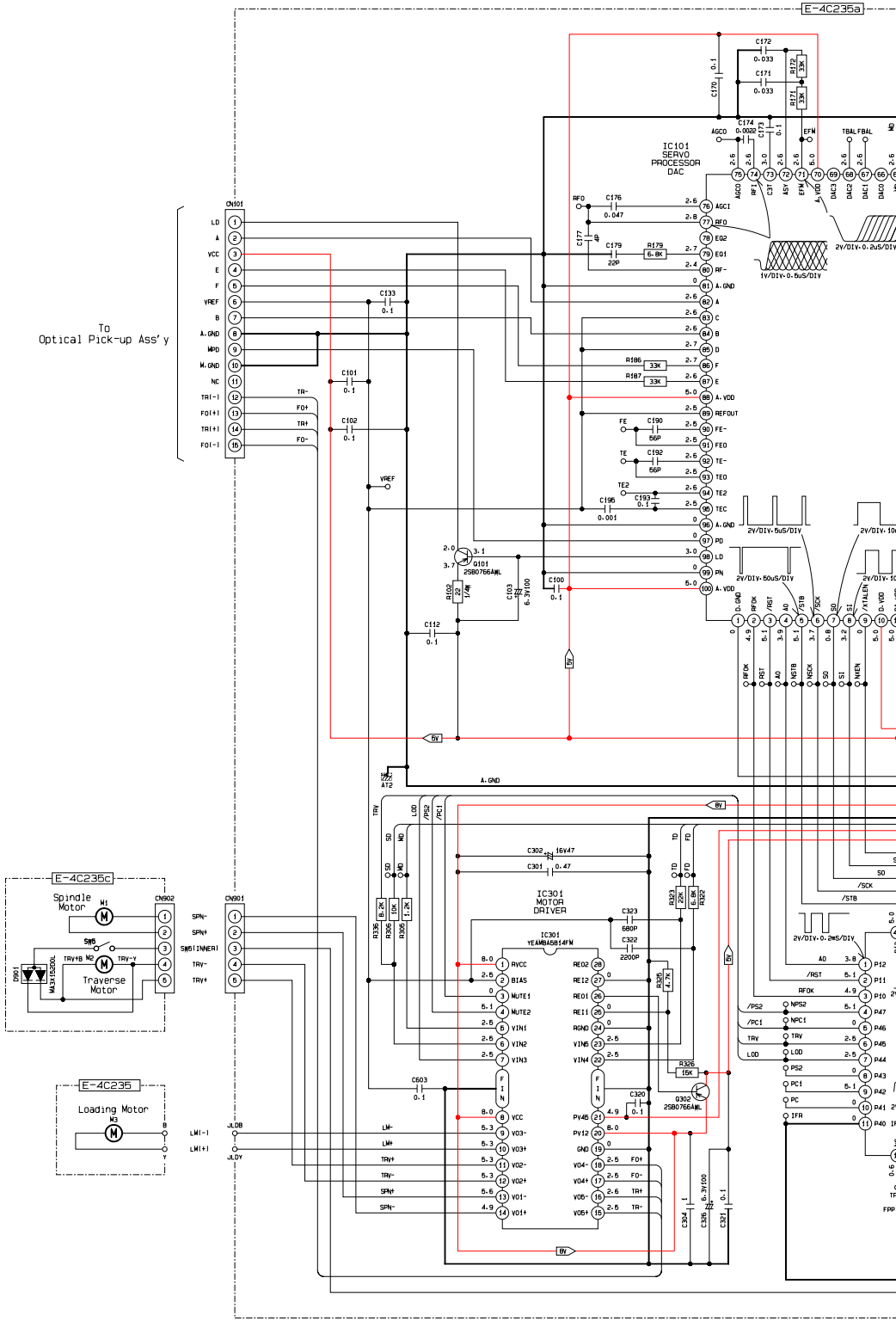
E-4C235a
IC101
SERVO
PROCESSOR
DAC
CN101
To
Optical Pick-up Ass'y
LD
A
VCC
E
F
VREF
B
A.GND
WPD
W.GND
NC
TR(-)
FO(+)
TR(+)
FO(-)
IC301
MOTOR
DRIVER
YEAMBA5814FM
Q101
2SB0766AWL
Q302
2SB0766AWL
E-4C235c
Spindle
Motor
M1
CN902
SW5
TRV+B
M2
TRV-Y
Traverse
Motor
D501
MA3X152200L
CN901
SPN-
SPN+
SW5(INNER)
TRV-
TRV+
E-4C235
Loading
Motor
M3
LM(-)
LM(+)
JLDB
JLDY
5V
8V
A.GND

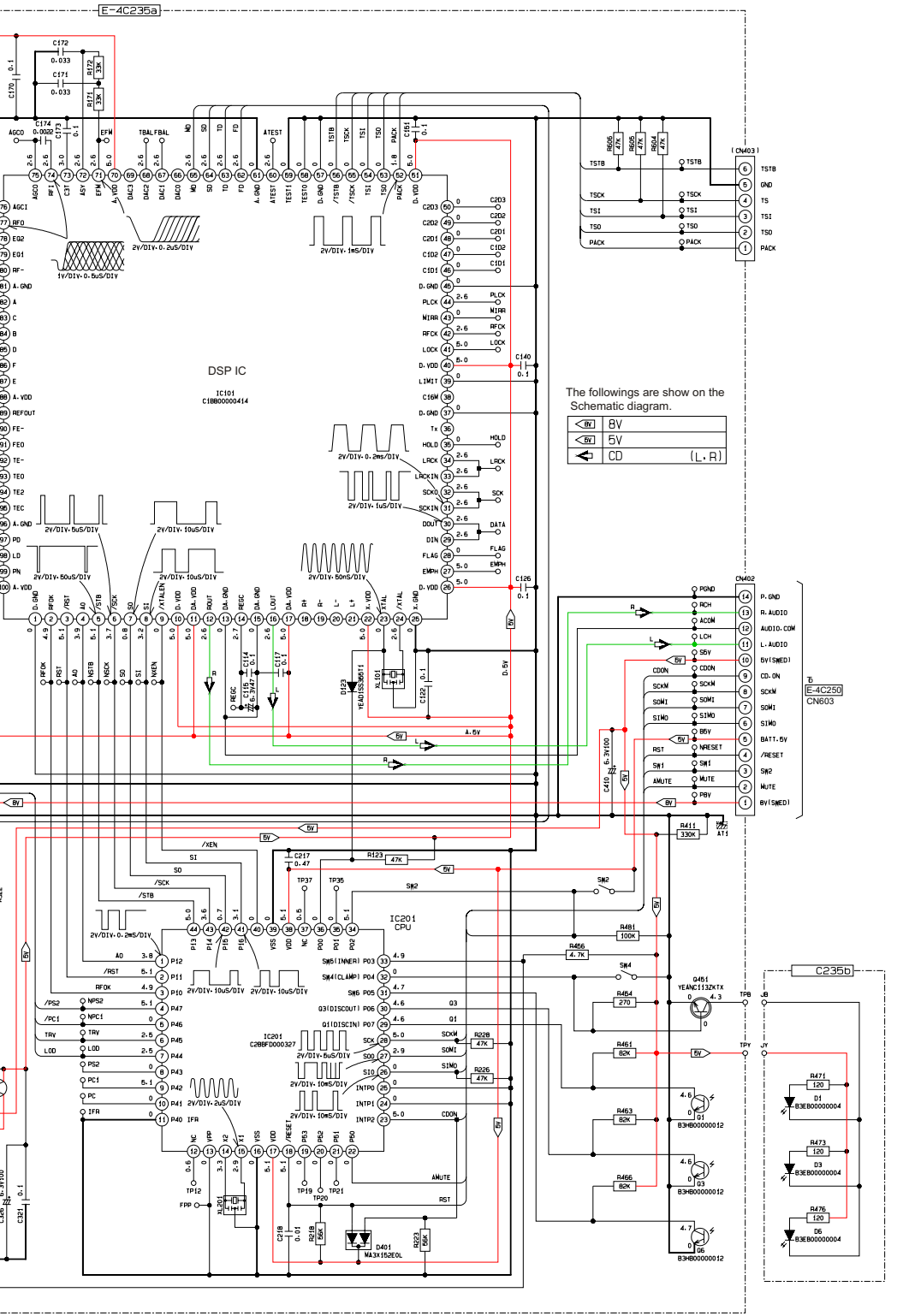
E-4C235a
DSP IC
IC101
C1BB00000414
The followings are show on the Schematic diagram.
8V
5V
CD (L,R)
(CN403)
TSTB
GND
TS
TSI
TSO
PACK
CN402
P.GND
R.AUDIO
AUDIO.COM
L.AUDIO
5V(SWED)
CD.ON
SCKM
SOMI
SIMO
BATT.5V
/RESET
SW1
SW2
MUTE
8V(SWED)
To
E-4C250
CN603
IC201
CPU
IC201
C2BBFD000327
YEANC113ZKTX
B3EB00000004
B3HB00000012
C235b
MA3X152E0L

E-4C228-1/229-1

	VX3200	VX4200
EN901	X	O
R957	1.8K	X
D971/D972	O	X
D950	RED	BLUE
R914/R916	3.9K/8.2K	X
S914/S916	O	X
R958	1.2K	1K
C984/C985	X	0.1u
R956	1.8K	X
R950~R955	1.5K	1K

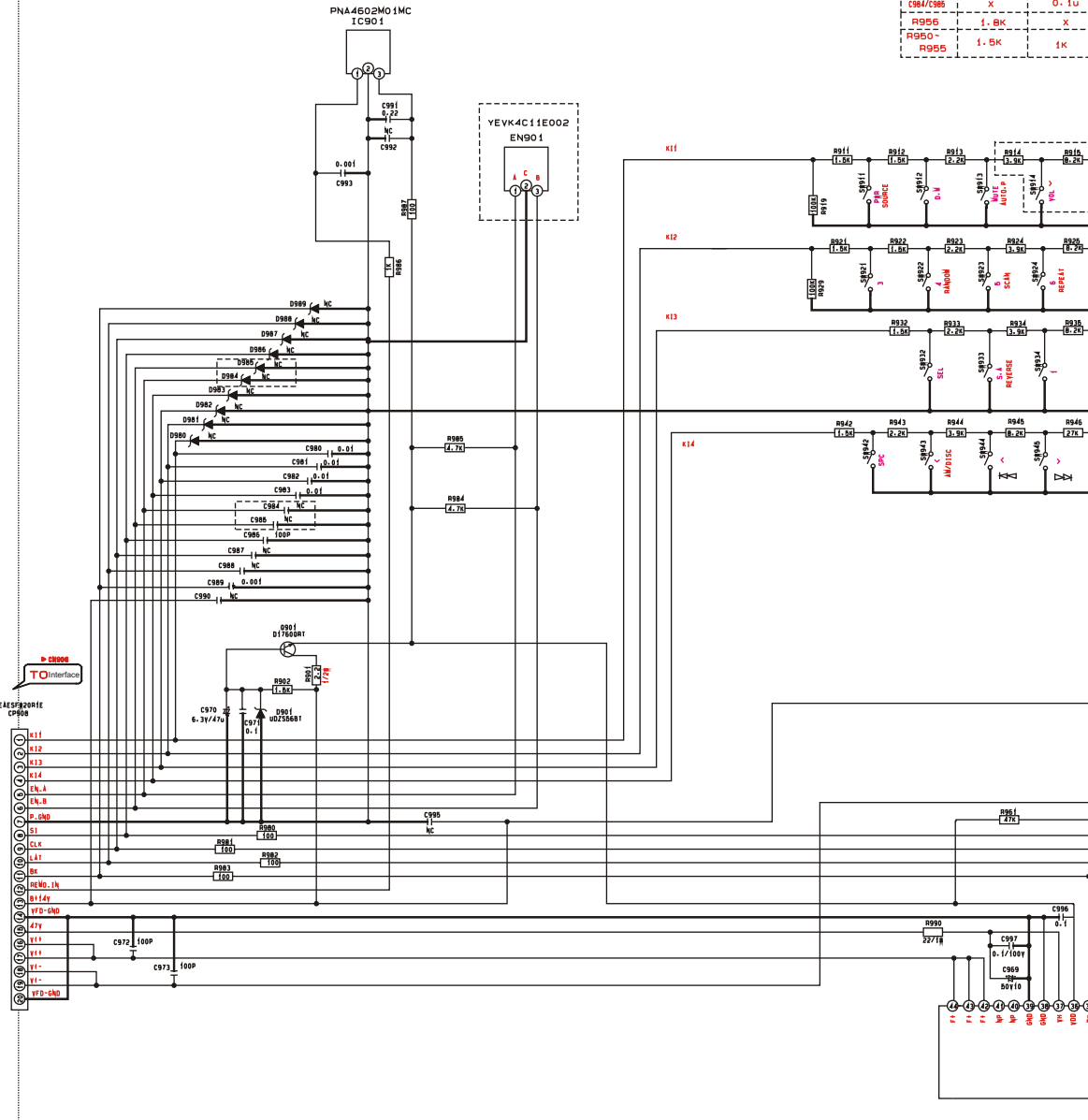

	VX3200	VX4200
EN901	X	O
R957	1.8K	X
D971/D972	O	X
D960	RED	BLUE
R914/R916	3.9K/8.2K	X
SW914/SW916	O	X
R958	1.2K	1K
C984/C985	X	0.1u
R956	1.8K	X
R950~R955	1.5K	1K

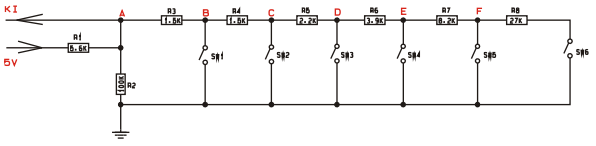

ACT_SW	SW1	SW2	SW3	SW4	SW5	SW6	NO_ACTION
RANGE (A_point)	0~ 1.3V	1.3~ 2.0V	2.0~ 2.6V	2.6~3.3V	3.3~ 3.9V	3.9~ 4.5V	4.5~5.0V
COUNT (A_point)	1.05V	1.71V	2.34V	2.99V	3.62V	4.23V	5V

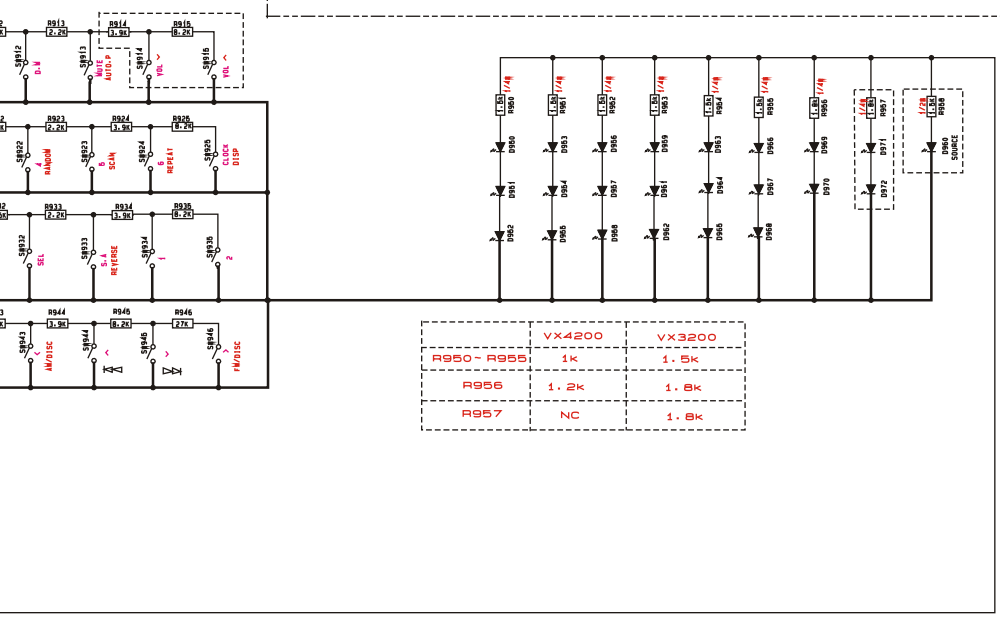

	VX4200	VX3200
R950~R955	1k	1.5k
R956	1.2k	1.8k
R957	NC	1.8k

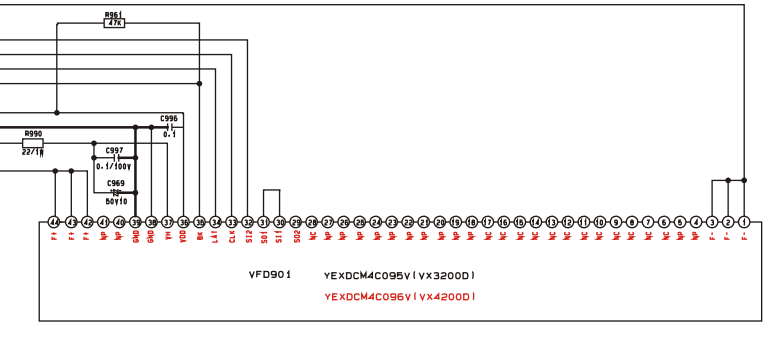

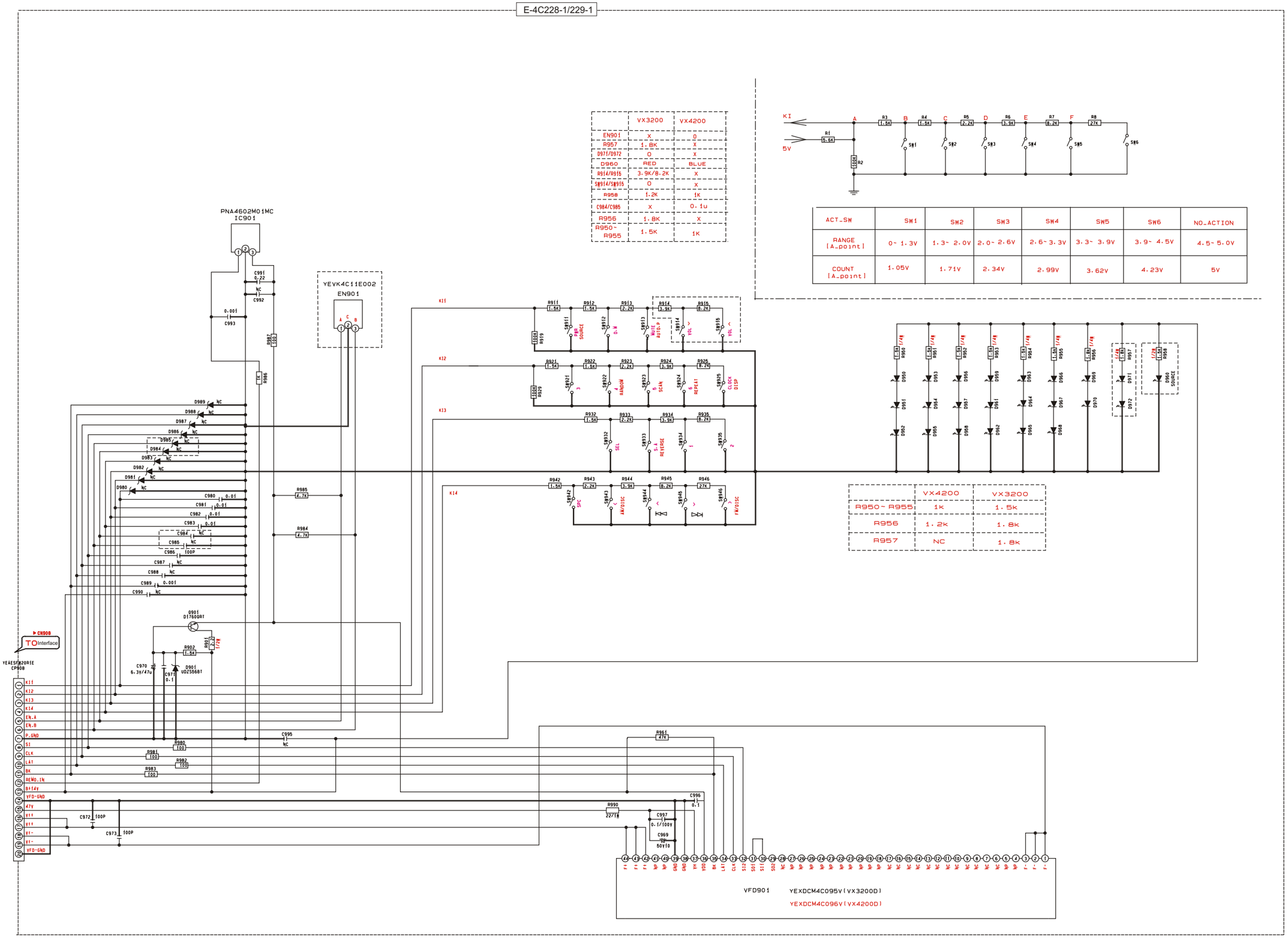

	VX3200	VX4200
EN901	X	O
R957	1.8K	X
D971/D972	O	X
D960	RED	BLUE
R914/R915	3.9K/8.2K	X
SW914/SW915	O	X
R958	1.2K	1K
C984/C985	X	0.1u
R956	1.8K	X
R950~R955	1.5K	1K

ACT_SW	SW1	SW2	SW3	SW4	SW5	SW6	NO_ACTION
RANGE (A_point)	0~1.3V	1.3~2.0V	2.0~2.6V	2.6~3.3V	3.3~3.9V	3.9~4.5V	4.5~5.0V
COUNT (A_point)	1.05V	1.71V	2.34V	2.99V	3.62V	4.23V	5V

	VX4200	VX3200
R950~R955	1k	1.5k
R956	1.2k	1.8k
R957	NC	1.8k

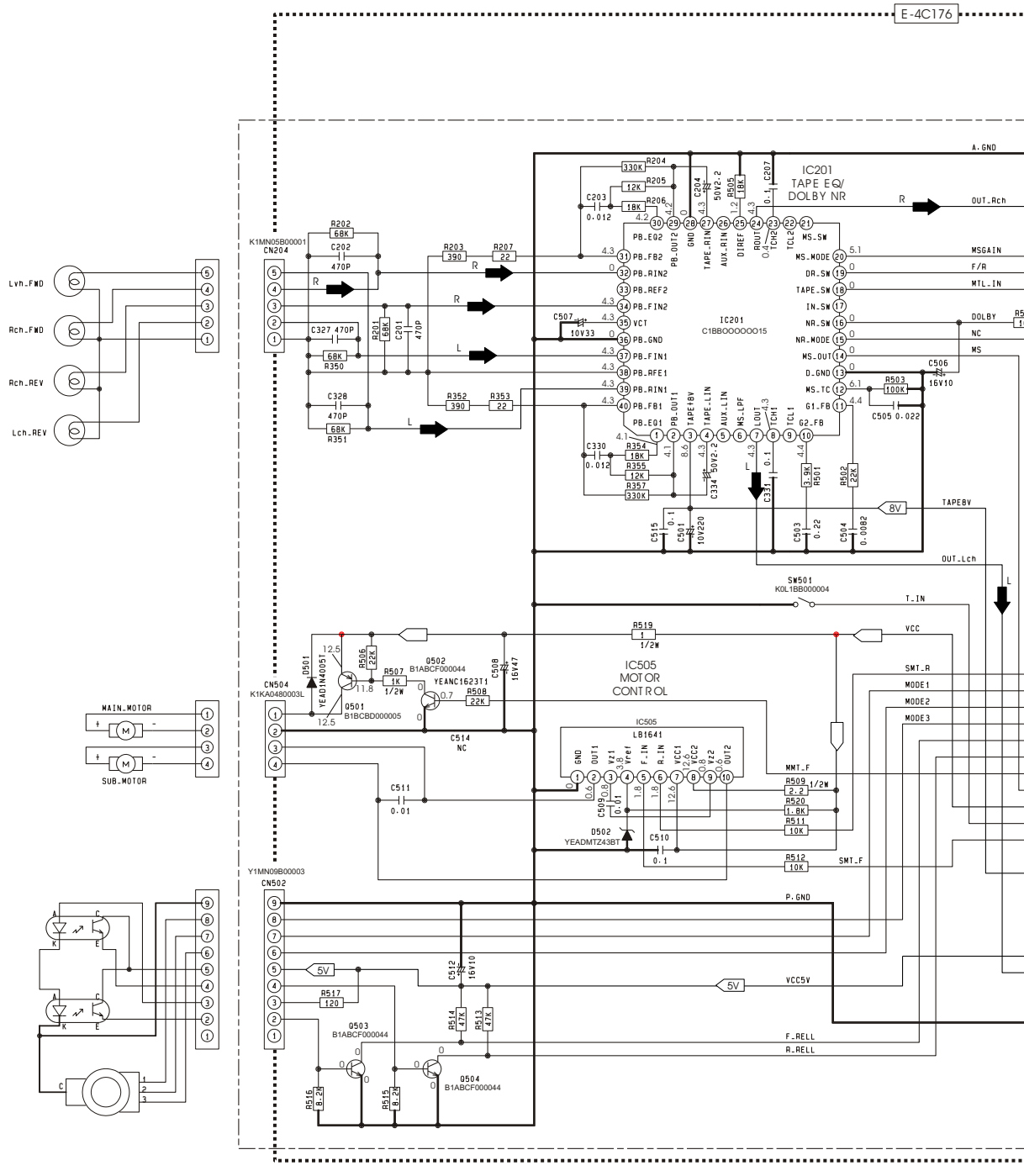
IC201
TAPE EQ/
DOLBY NR
IC201
C1BB000000015
IC505
MOTOR
CONTROL
IC505
LB1641
CN204
K1MN05B00001
CN504
K1KA0480003L
CN502
Y1MN09B00003
SW501
K0L1BB000004
Q501
B1BCBD000005
Q502
B1ABCF000044
Q503
B1ABCF000044
Q504
B1ABCF000044
D501
YEAD1M4005I
D502
YEADMTZ43B1
YEANC1623T1
Lvh_FWD
Rch_FWD
Rch_REV
Lch_REV
MAIN_MOTOR
SUB_MOTOR
A.GND
OUT_Rch
MSGAIN
F/R
MTL_IN
DOLBY
NC
MS
TAPEBV
OUT_Lch
T_IN
VCC
SMT_R
MODE1
MODE2
MODE3
MMT_F
SMT_F
P.GND
VCC5V
F_RELL
R_RELL
8V
5V

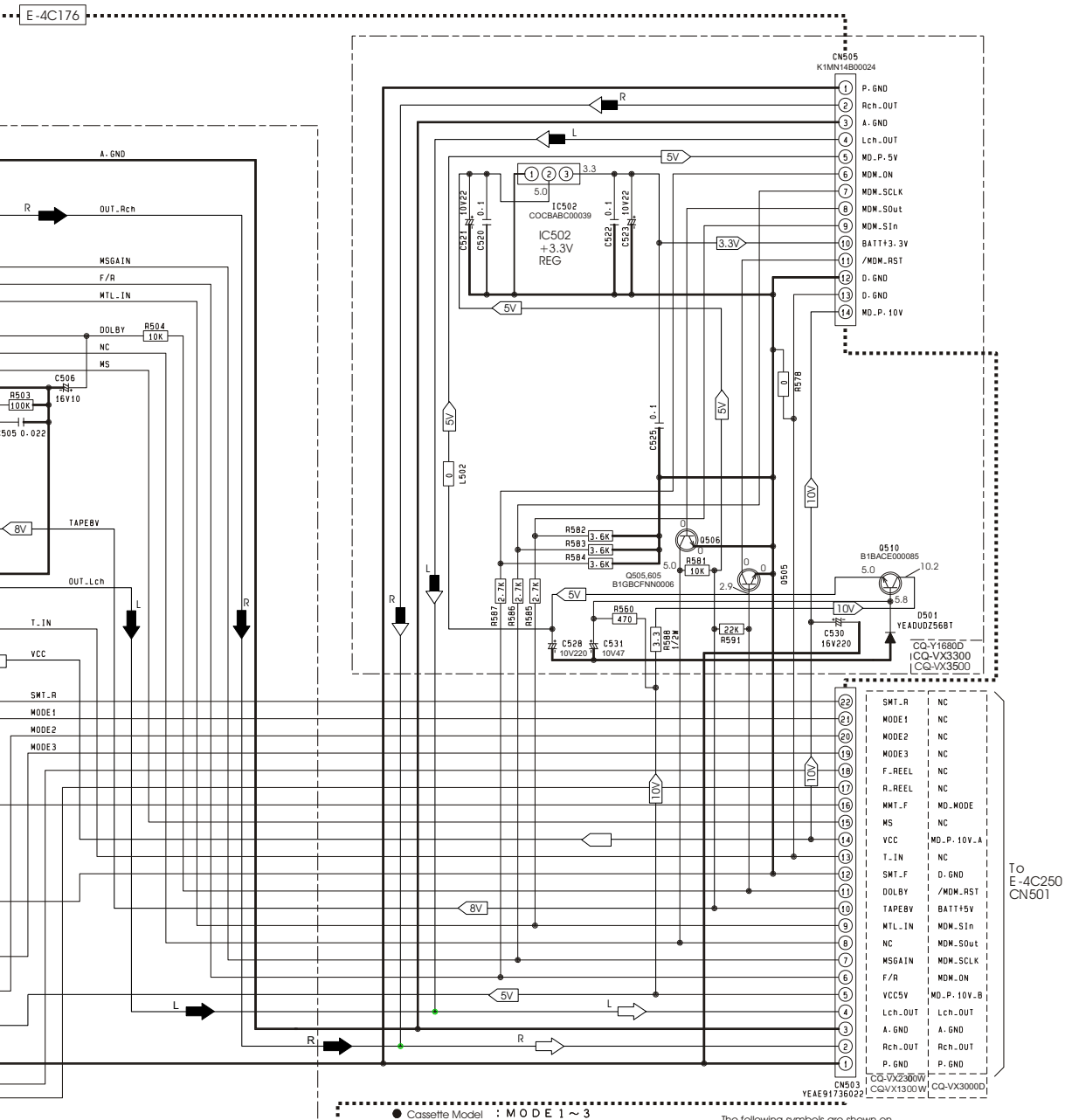

● Cassette Model : MODE 1 ~ 3

	EJECT	PAUSE	REW	FF	PLAY(R)	PLAY(F)
MODE 1	H	H	L	H	L	L
MODE2	H	L	L	L	L	H
MODE3	L	H	L	L	H	H

The following symbols are shown on the schematic diagram.

	+B
3.3V	3.3V
5V	5V
8V	8V
10V	10V
	TAPE
	MD
	AUDIO

CQ-VX1300W/VX2300W Tape Deck Block

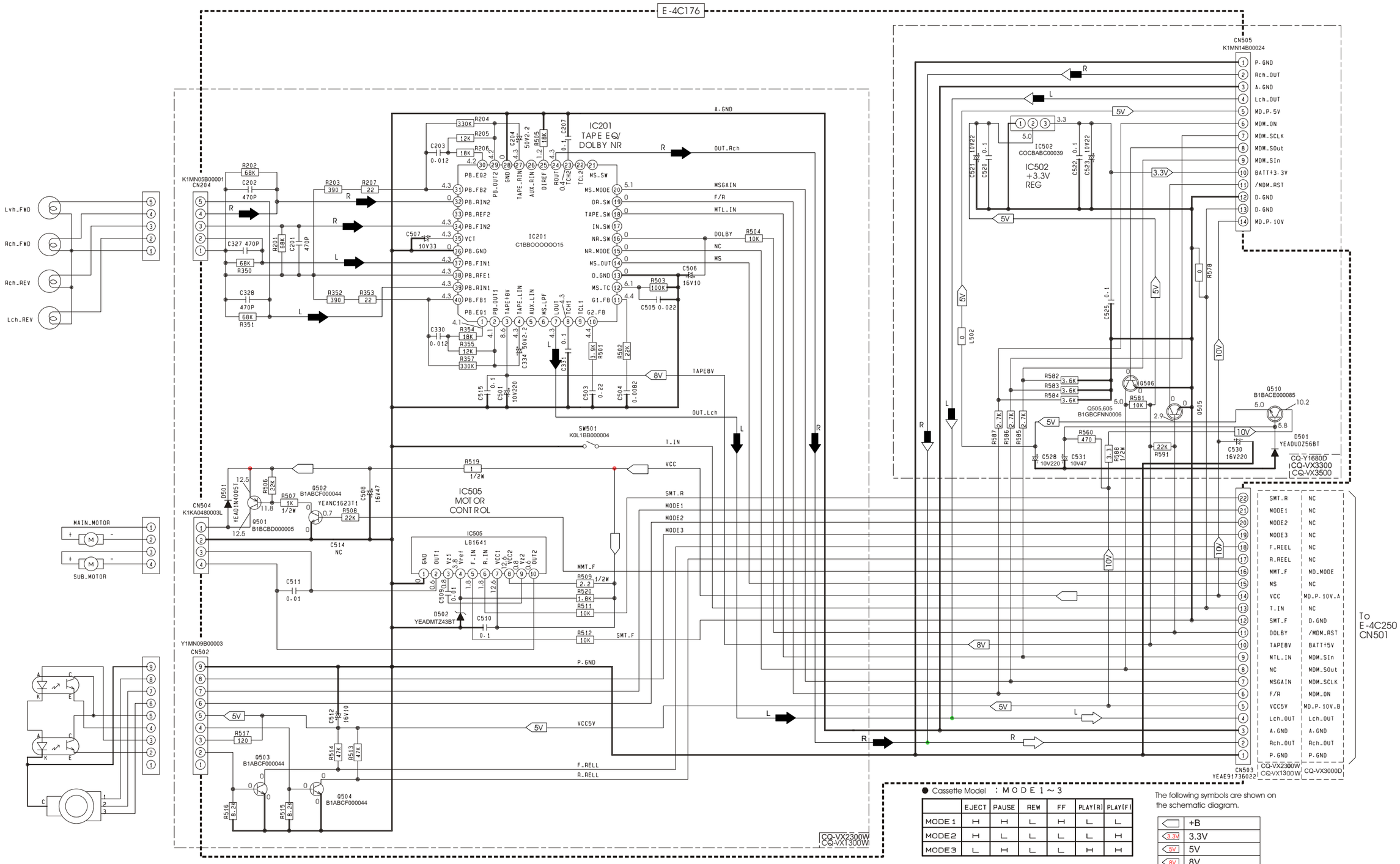

● Cassette Model : MODE 1～3

	EJECT	PAUSE	REW	FF	PLAY(R)	PLAY(F)
MODE 1	H	H	L	H	L	L
MODE 2	H	L	L	L	L	H
MODE 3	L	H	L	L	H	H

The following symbols are shown on the schematic diagram.

	+B
3.3V	3.3V
5V	5V
8V	8V
10V	10V
	TAPE
	MD
	AUDIO

CQ-VX1300W/VX2300W Tape Deck Block

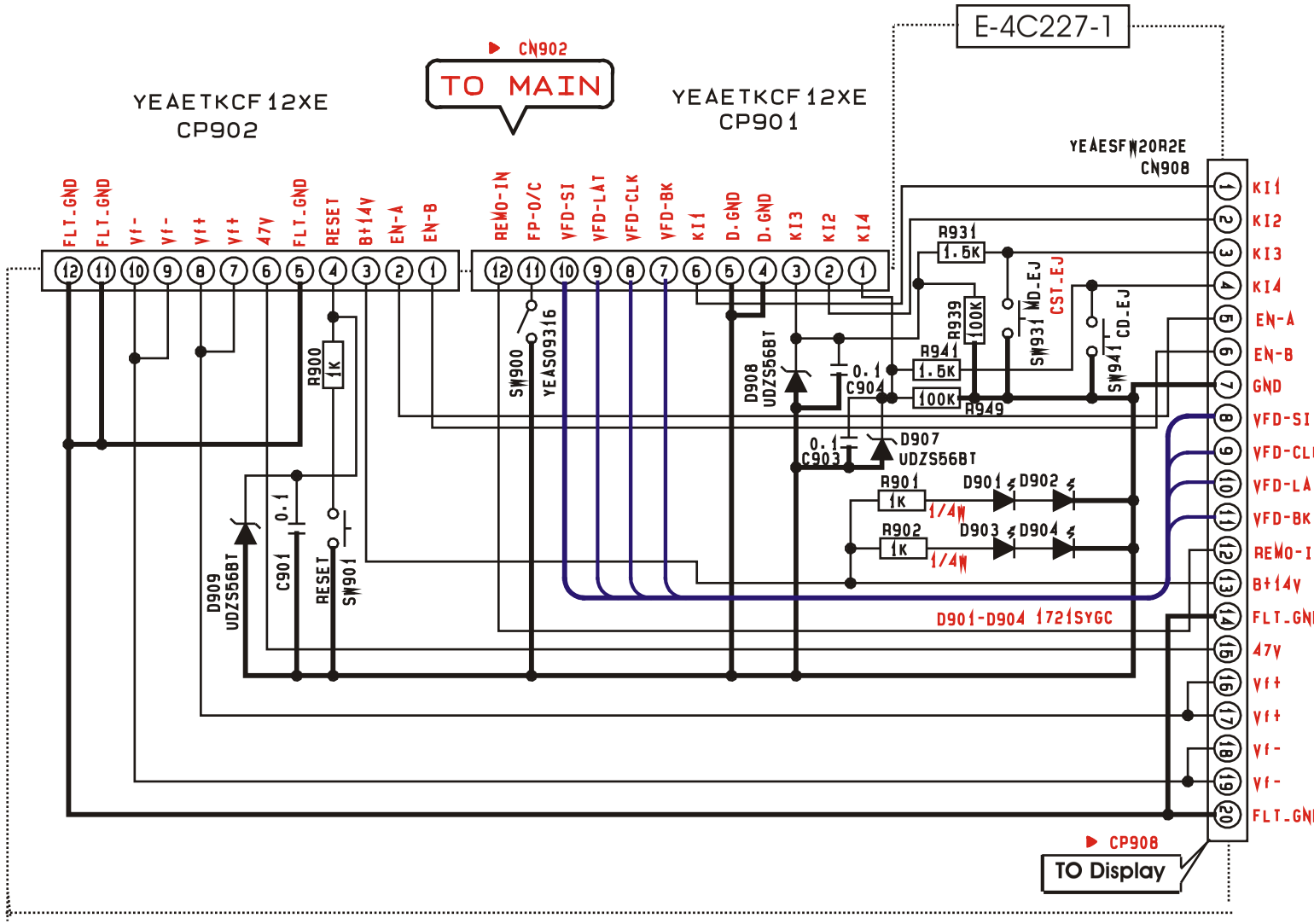

CQ-VX1300W/2300W Interface Block

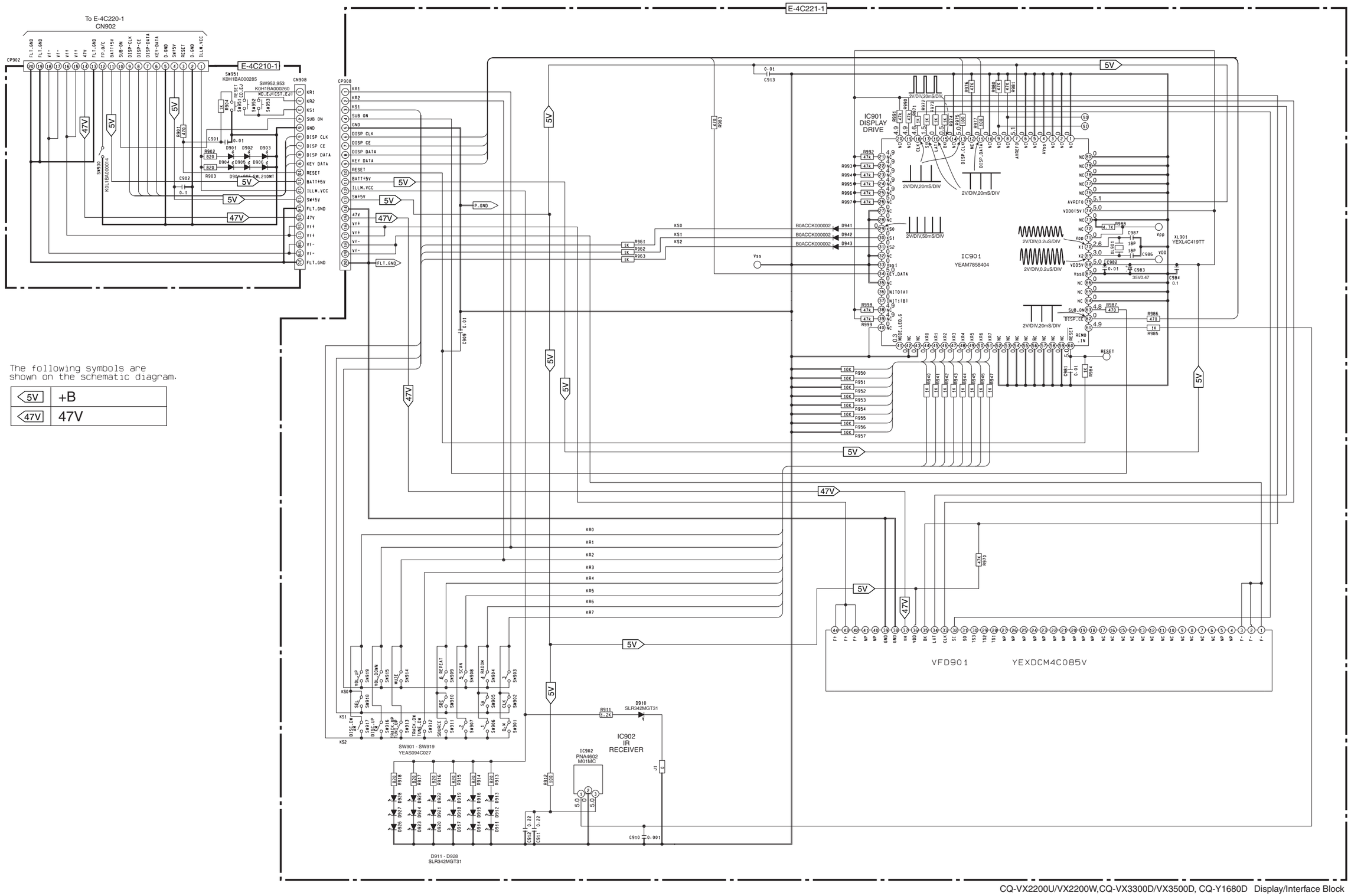
To E-4C220-1
CN902
E-4C210-1
E-4C221-1
CN908
IC901
DISPLAY
DRIVE
IC901
YEAM7858404
XL901
YEXL4C419TT
VFD901
YEXDCM4C085V
IC902
IR
RECEIVER
IC902
PNA4602
M01MC
SW901 - SW919
YEAS094C027
D911 - D928
SLR342MGT31
The following symbols are
shown on the schematic diagram.
5V +B
47V 47V

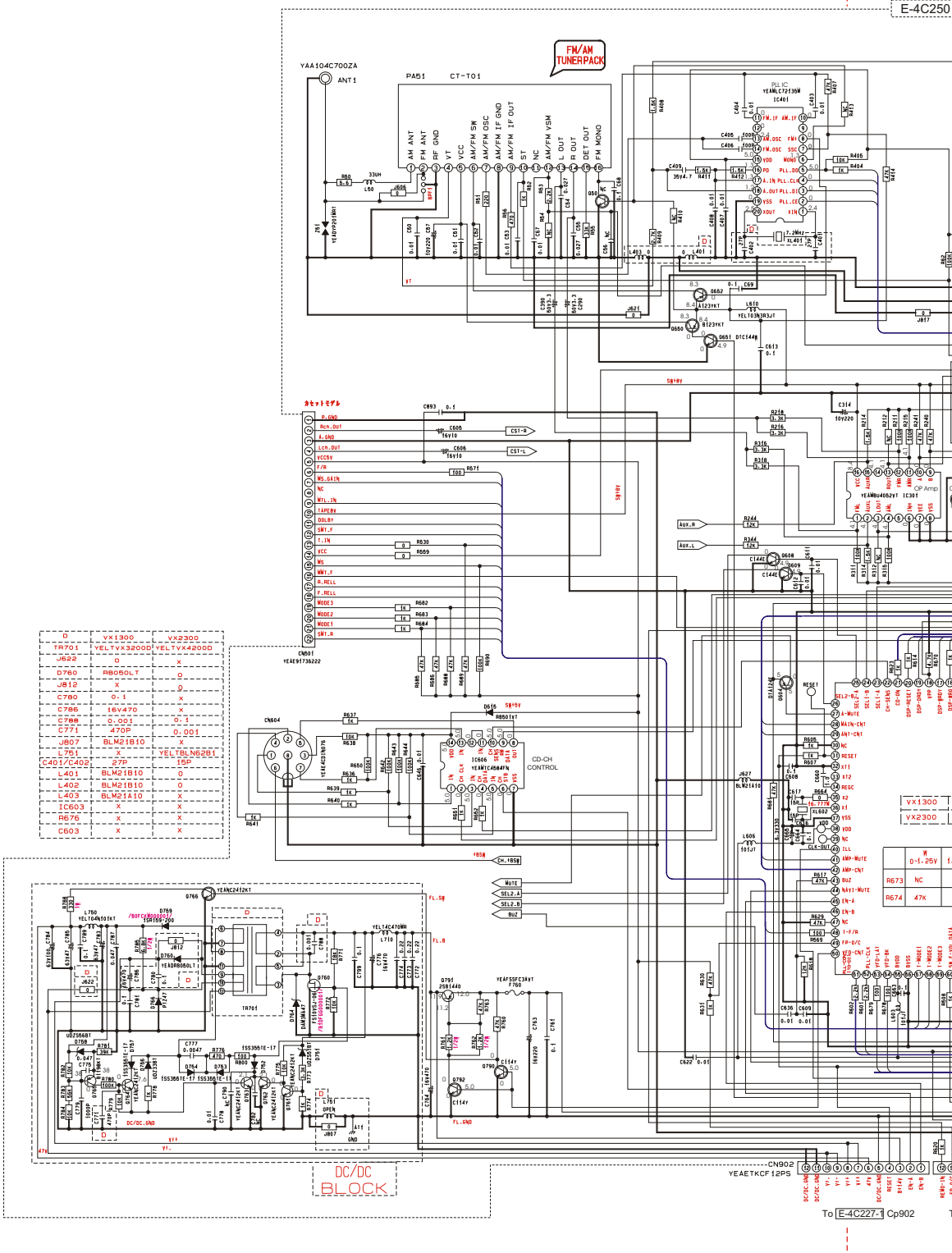

D	VX1300	VX2300
TR701	YELTVX3200D	YELTVX4200D
J622	O	X
D760	RB050LT	O
J812	X	O
C780	0-1	X
C786	16V470	X
C788	0-001	0-1
C771	470P	0-001
J807	BLM21B10	X
L751	X	YELTBLN6281
C401/C402	27P	15P
L401	BLM21B10	O
L402	BLM21B10	O
L403	BLM21A10	X
IC603	X	X
R676	X	X
C603	X	X

	W 0-1.25V	
R673	NC	1.
R674	47K	

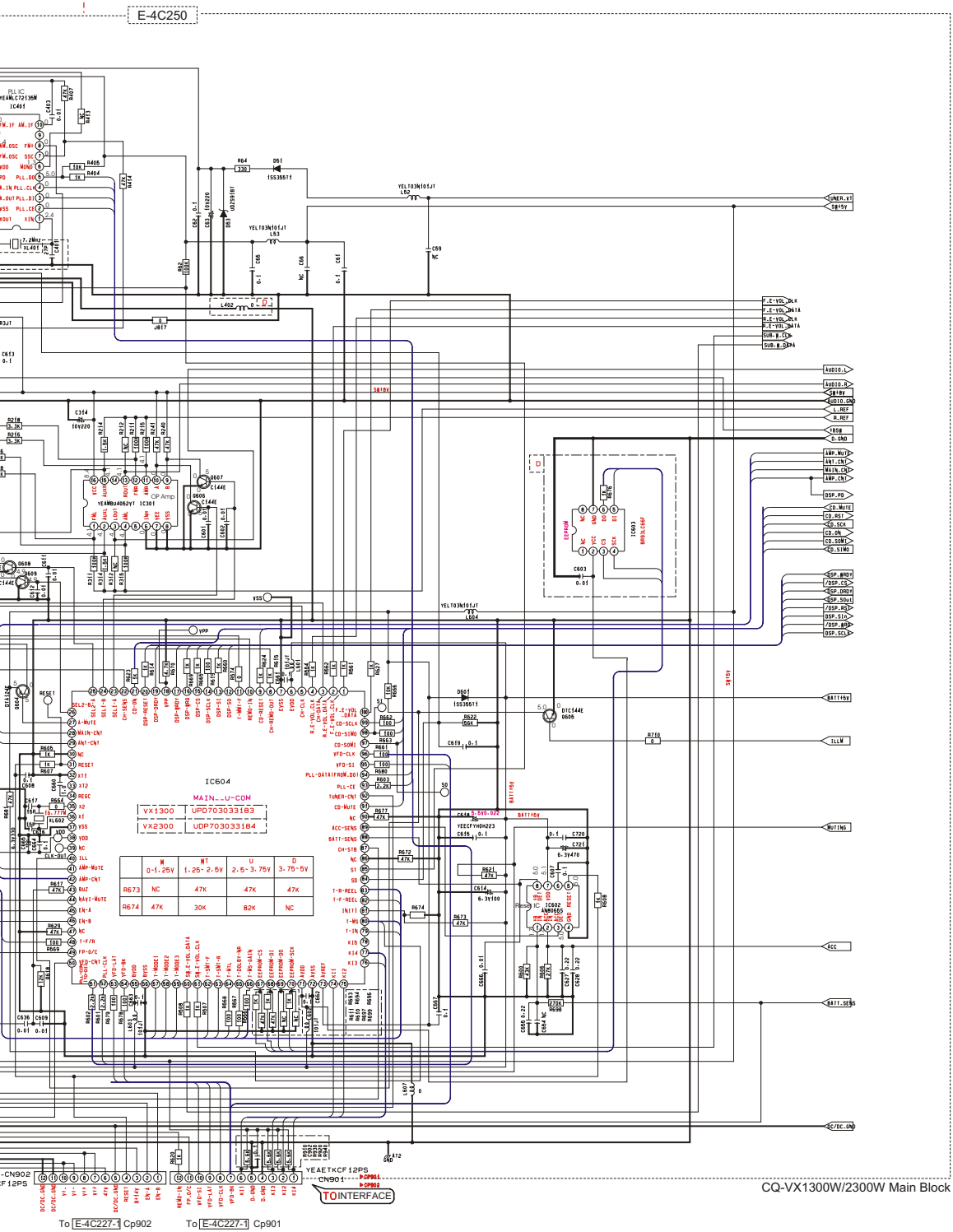

CQ-VX1300W/2300W Main Block

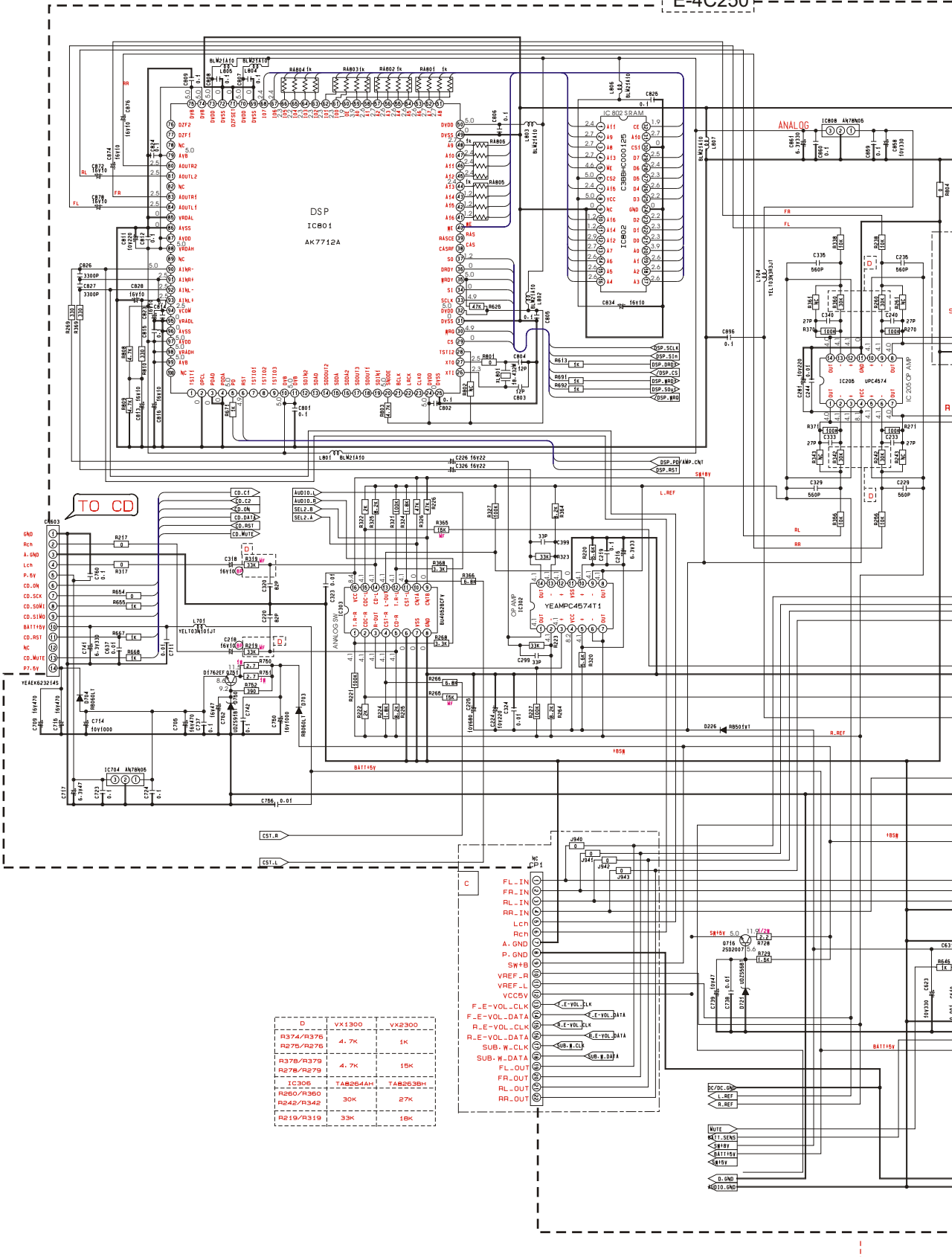

D	VX1300	VX2300
R374/R376	4.7K	1K
R275/R276		
R378/R379	4.7K	15K
R278/R279		
IC306	TA8264AH	TA8263BH
R260/R360	30K	27K
R242/R342		
R219/R319	33K	18K

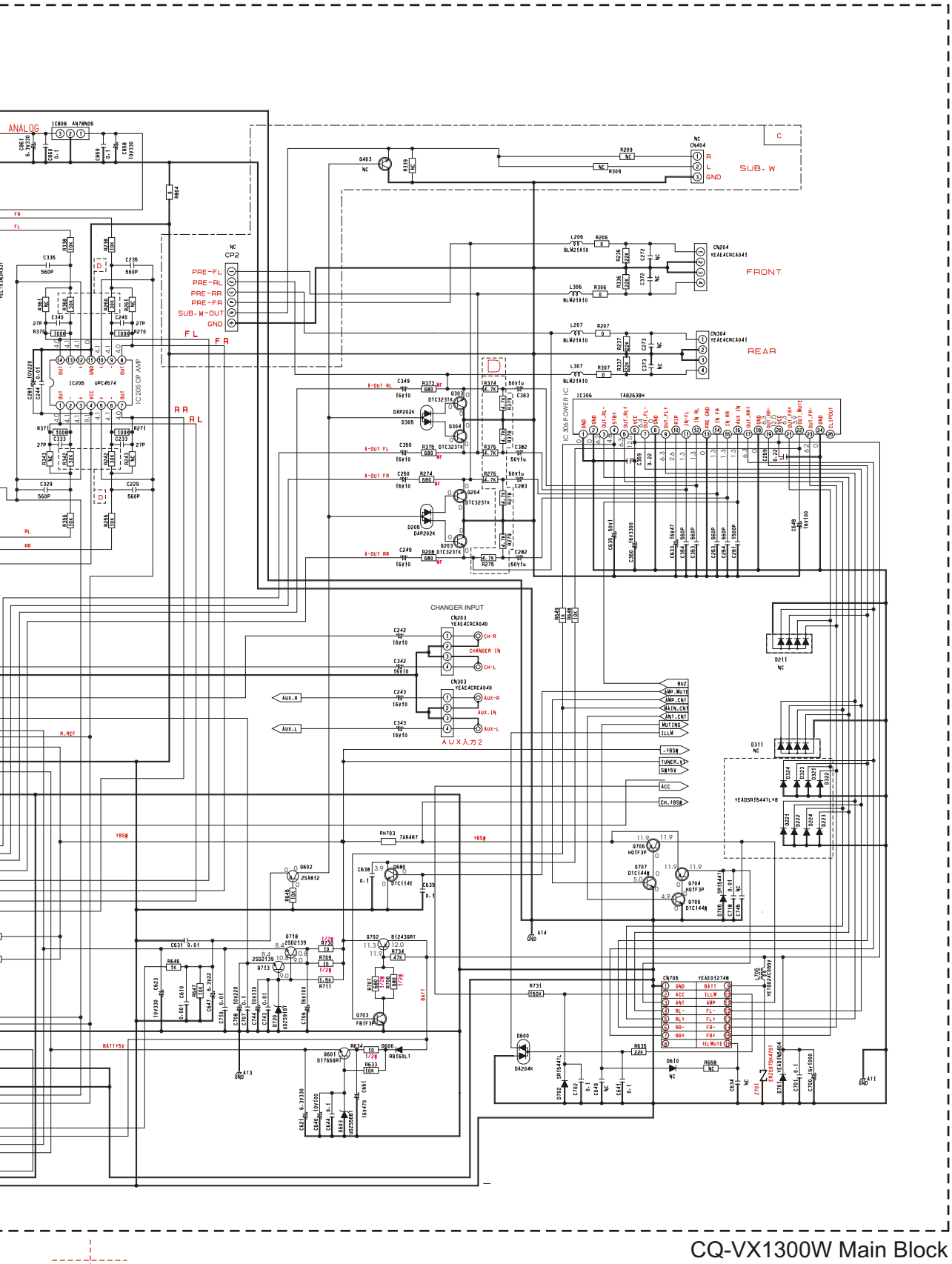
ANALOG
SUB. W
FRONT
REAR
CHANGER INPUT
IC 306 POWER IC
IC205 OP AMP
PRE-FL
PRE-RL
PRE-RR
PRE-FR
SUB. W-OUT
GND
AUX.R
AUX.L
BUZ
AMP.MUTE
AMP.CNT
MAIN.CNT
ANT.CNT
MUTING
ILLM
+B5M
TUNER.V
SW15V
ACC
CH.+B5M
BATT
BATT15V
R.REF

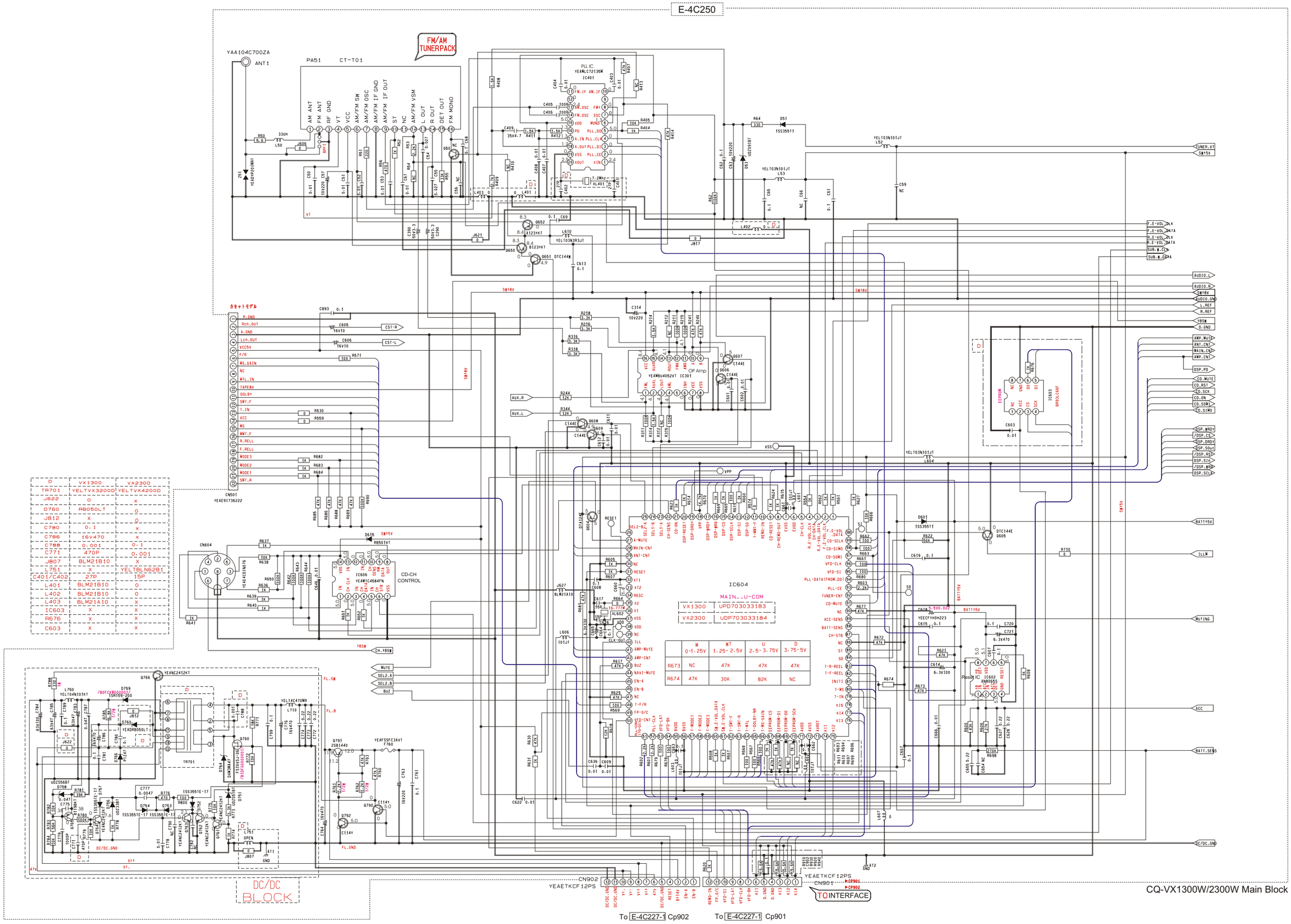

D	VX1300	VX2300
TR701	YELTVX3200D	YELTVX4200D
J622	O	X
D760	RB050LT	O
J812	X	O
C780	0.1	X
C786	16V470	X
C788	0.001	0.1
C771	470P	0.001
J807	BLM21B10	X
L751	X	YELTBLN62B1
C401/C402	27P	15P
L401	BLM21B10	O
L402	BLM21B10	O
L403	BLM21A10	X
IC603	X	X
R676	X	X
C603	X	X

	W 0-1.25V	WT 1.25-2.5V	U 2.5-3.75V	D 3.75-5V
R673	NC	47K	47K	47K
R674	47K	30K	82K	NC

CQ-VX1300W/2300W Main Block

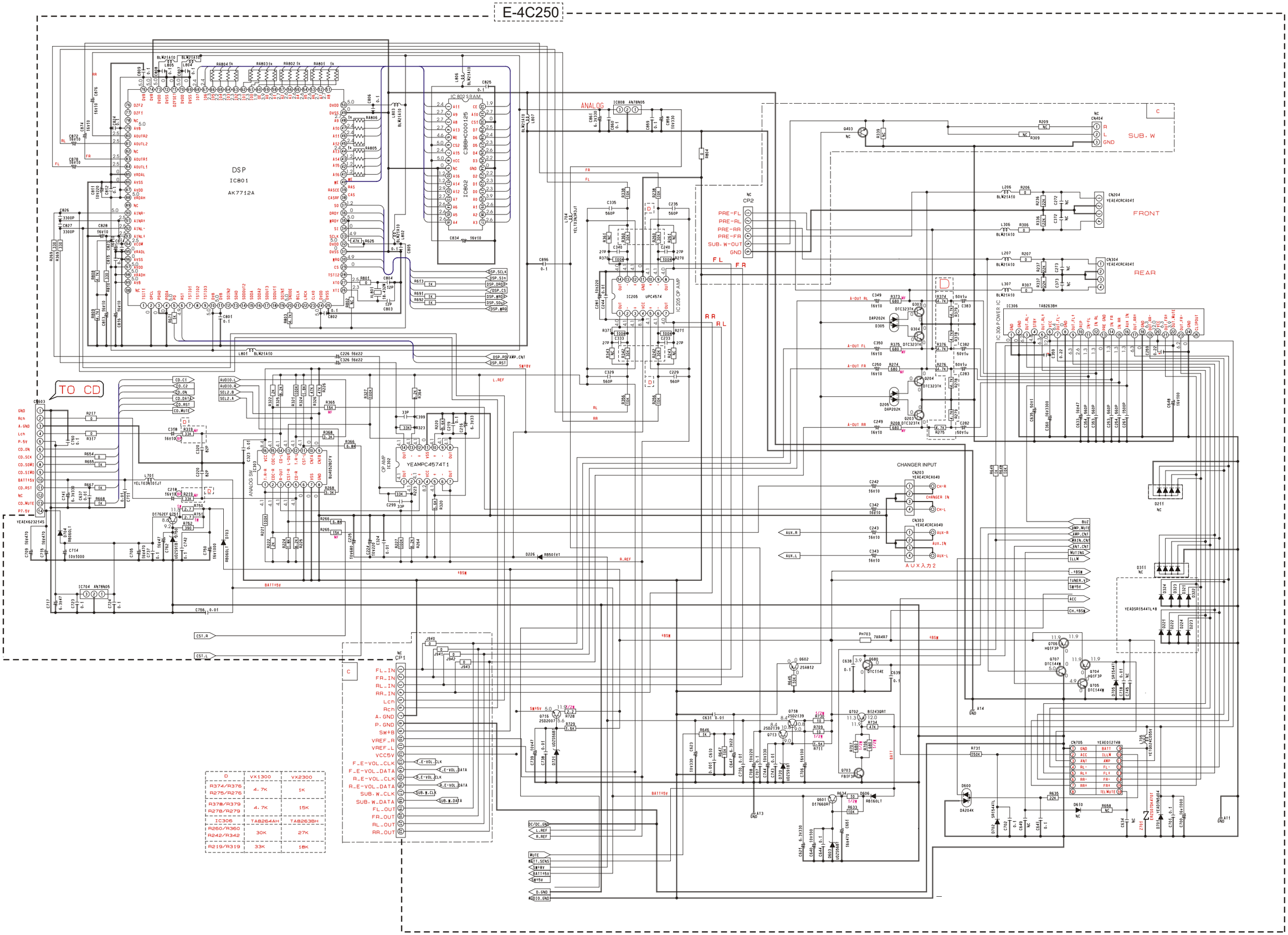

D	VX1300	VX2300
R374/R376 R275/R276	4.7K	1K
R378/R379 R278/R279	4.7K	15K
IC306	TA8264AH	TA8263BH
R260/R360 R242/R342	30K	27K
R219/R319	33K	18K

CQ-VX1300W Main Block

Specifications *

General

Power Supply	:12V DC (11V -16V) Test Voltage 14.4V, Negative ground
Current Consumption	:8.5A (at CD operation, rated output)
Rated Output	:16W x 4 channels (1,000Hz,1%,4Ω)
Maximum Output	: 41 W x 4 channels
Suitable Speaker Output	: 4Ω
Audio Input Impedance	: 10kΩ
Audio Input Sensitivity	:2V (AUX IN)
Pre-out Voltage	:600mV
Preout Impedance	:600Ω

DSP

Channel	: 2 Channels (input) 4 Channels (output)
DSP Patterns	: 7 patterns
Equalizer Center Frequency	: 80,160,320,640,1.6k 4k,10k (Hz)
Equalized Range	: -12 dB to +12 dB (13 step)

FM Stereo Radio

Frequency Range	: 87.5 - 108.0 MHz
Usable Sensitivity	: 12dBf.
Total Harmonic Distortion (mono)	: 0.3% (1kHz)
Signal to Noise Ratio (mono)	: 70dB
Frequency Response	: 20 to 15,000 Hz ±3dB
Stereo Separation	: 42 dB (1 kHz)
Image Rejection Ratio	: 75 dB

MW Ratio

Frequency Range	: 531 - 1,602 kHz
Usable Sensitivity	: 27 dB/μV (S/N 20 dB)
Image Rejection Ratio	: 65 dB

CD Player

Channel	: 2 channels
D/A Converter	: 16-bit linear
Frequency Response	: 5 to 20,000 Hz
Signal to Noise Ratio	: 90 dB (IHF A)
Wow and Flutter	: Below measurable limits

Cassette Player

Reproduction System	: 4-track, 2-program stereo
Tape Speed	: 4.76 cm/sec
FF/REW time	: less than 110 sec (C-60)
Frequency Response	: 30 to 14,000 Hz (Normal) : 30 to 17,000 Hz (Metal)
Wow and Flutter	: 0.12% (WRMS)
Signal to Noise Ratio	: 56 dB (IHF A) [Dolby B NR : OFF] : 66 dB (IHF A) [Dolby B NR : ON]

Dimensions** (W x H xD) : 178 x 100 x160 (mm)
Weight** : 2.7 kg

* Specifications and the design are subject to possible modification without notice due to improvement

** Dimensions and weight shown are approximate.

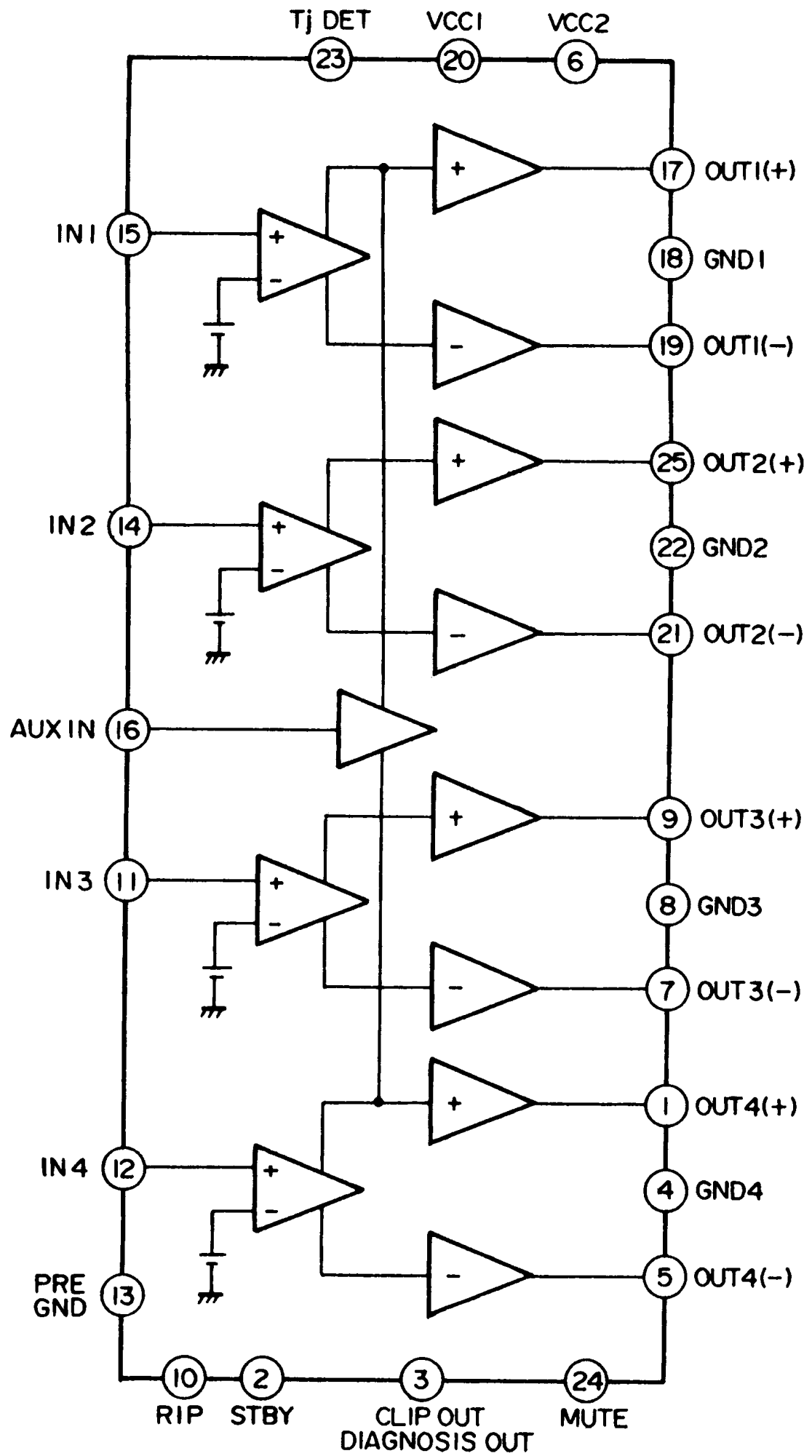
Tj DET
VCC1
VCC2
23
20
6
17
OUT1(+)
IN1
15
18
GND1
19
OUT1(−)
25
OUT2(+)
IN2
14
22
GND2
21
OUT2(−)
AUX IN
16
9
OUT3(+)
IN3
11
8
GND3
7
OUT3(−)
1
OUT4(+)
IN4
12
4
GND4
PRE GND
13
5
OUT4(−)
10
2
3
24
RIP
STBY
CLIP OUT
DIAGNOSIS OUT
MUTE

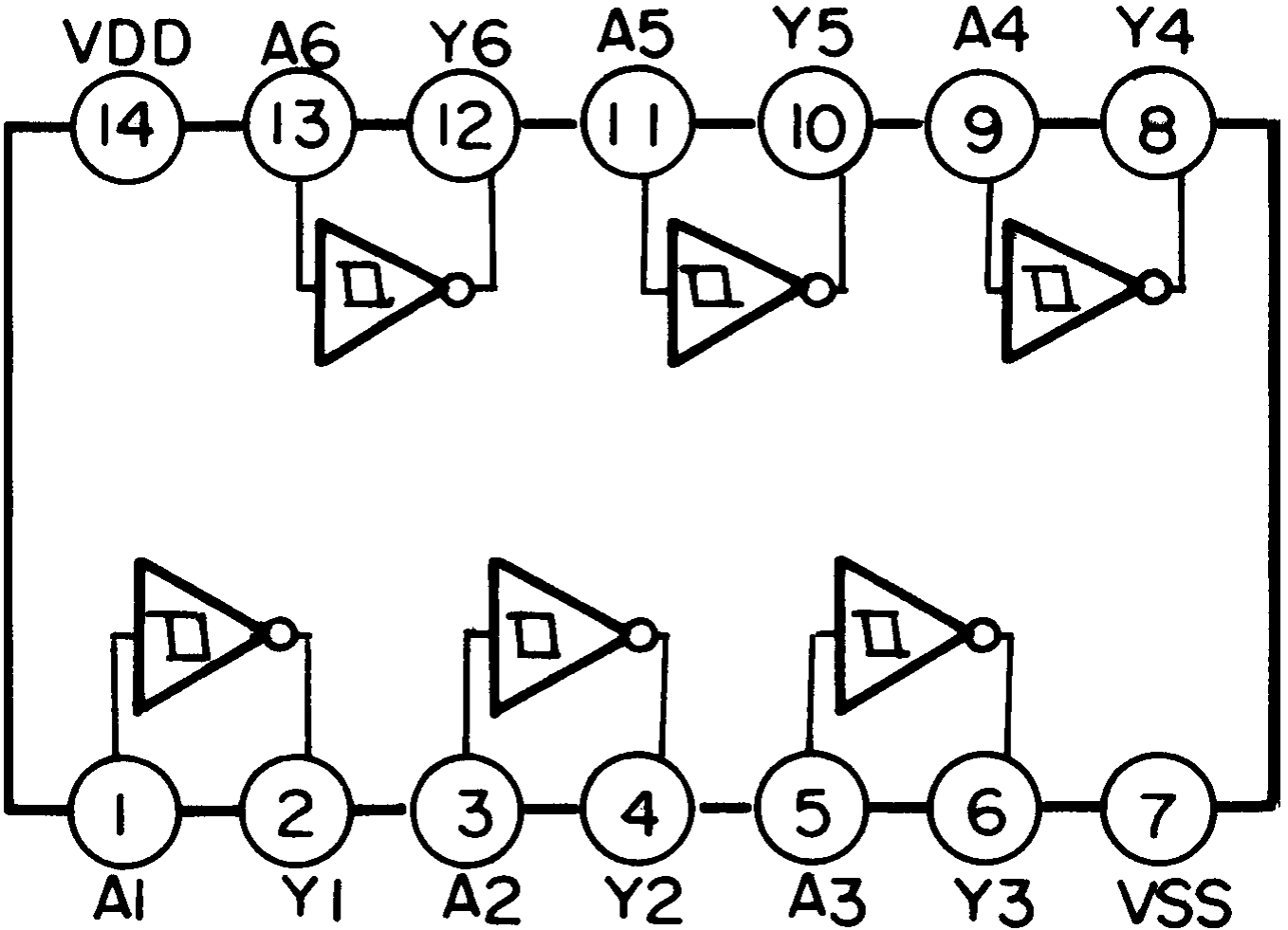
VDD
A6
Y6
A5
Y5
A4
Y4
14
13
12
11
10
9
8
1
2
3
4
5
6
7
A1
Y1
A2
Y2
A3
Y3
VSS

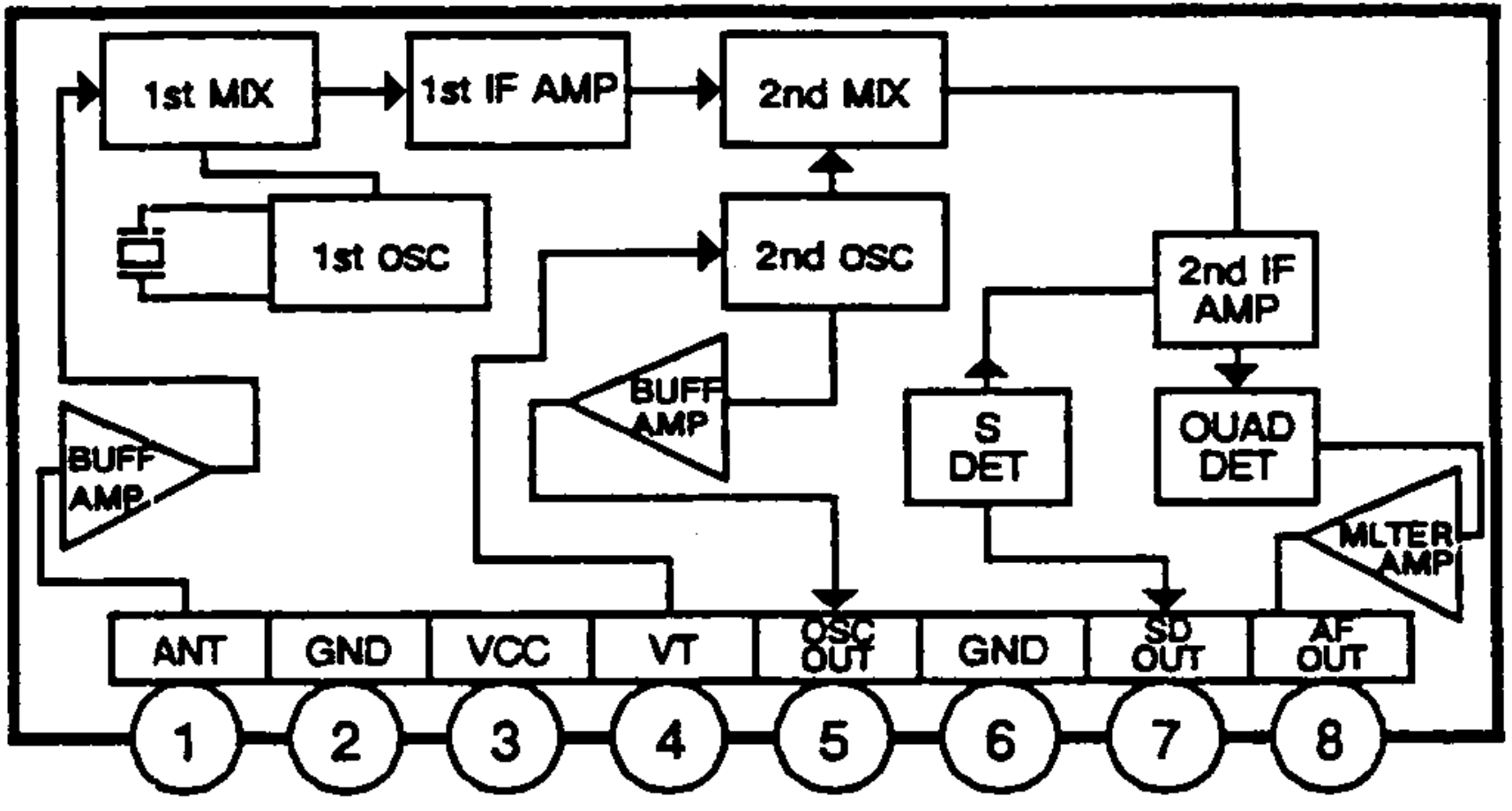
1st MIX
1st IF AMP
2nd MIX
1st OSC
2nd OSC
2nd IF AMP
BUFF AMP
BUFF AMP
S DET
QUAD DET
MLTER AMP
ANT
GND
VCC
VT
OSC OUT
GND
SD OUT
AF OUT
1
2
3
4
5
6
7
8

[E-4C235d][Bottom View]

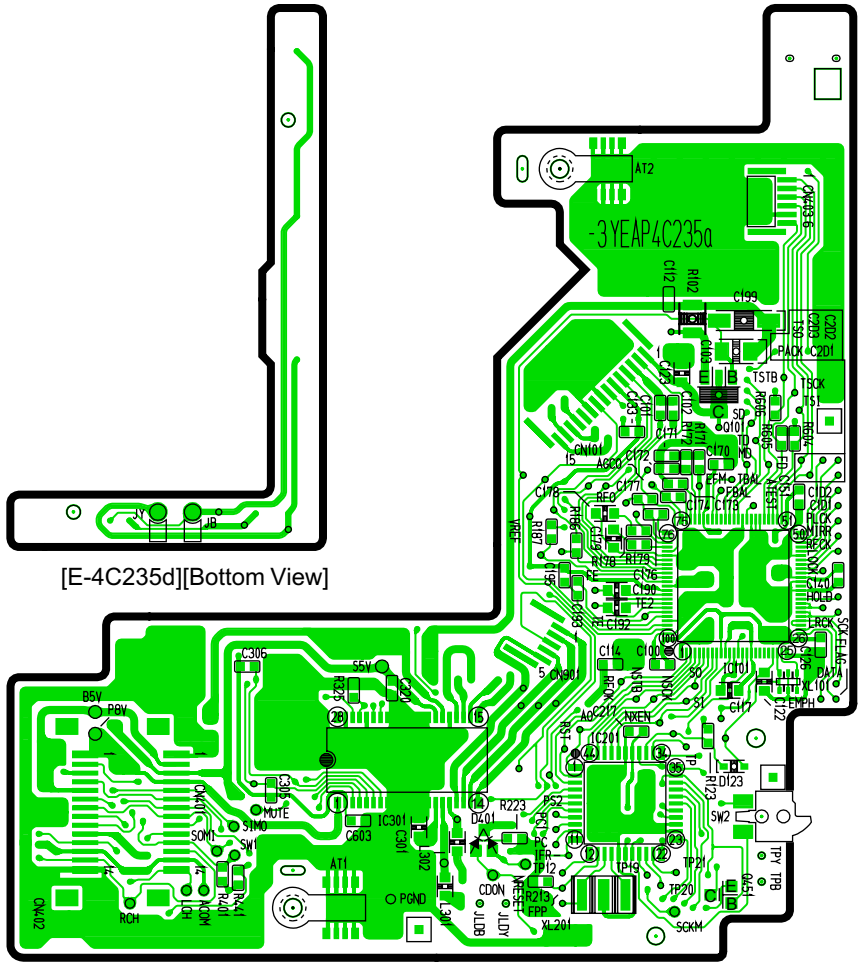

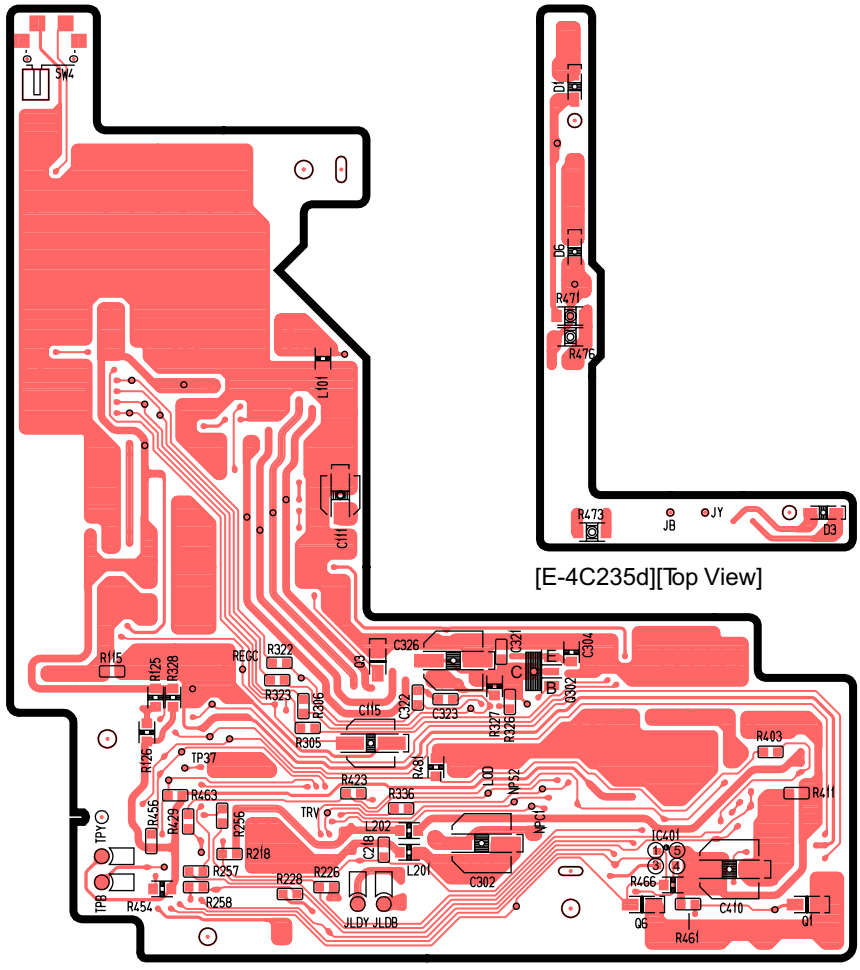

[E-4C235d][Top View]

[E-4C235a][Top View]

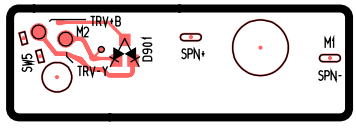

[E-4C235b][Top View]

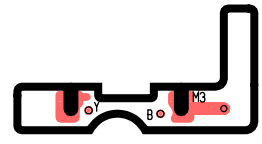

[E-4C235c][Top View]

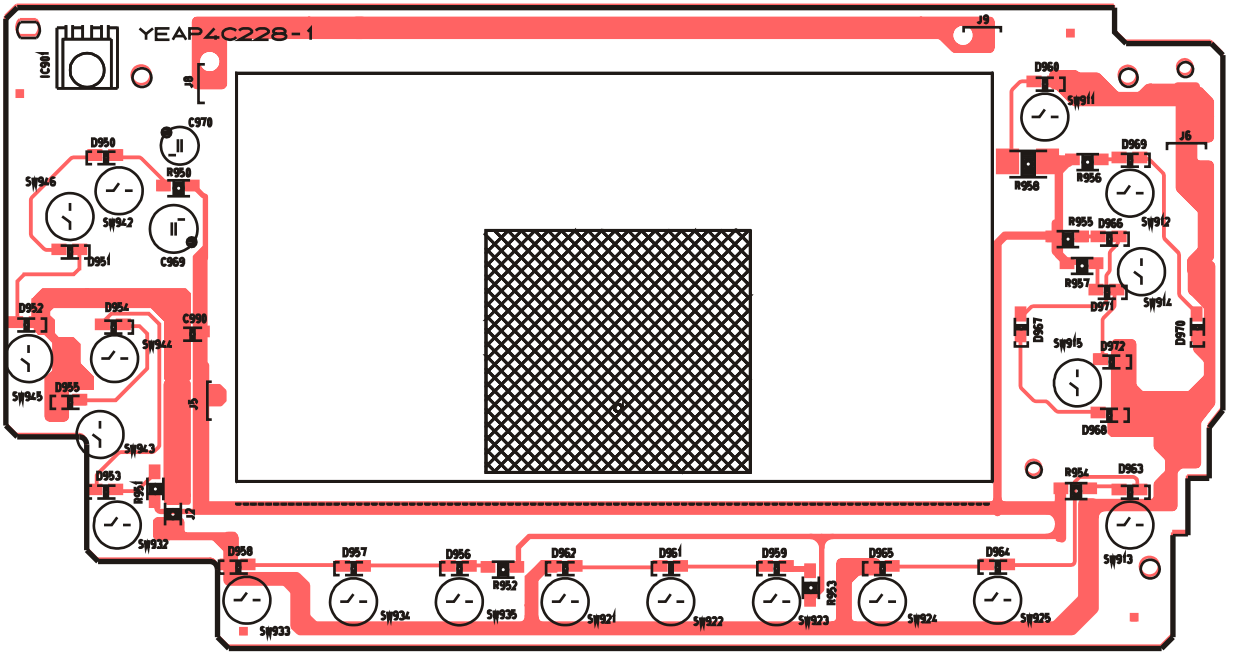

[E-4C228-1][Top View]

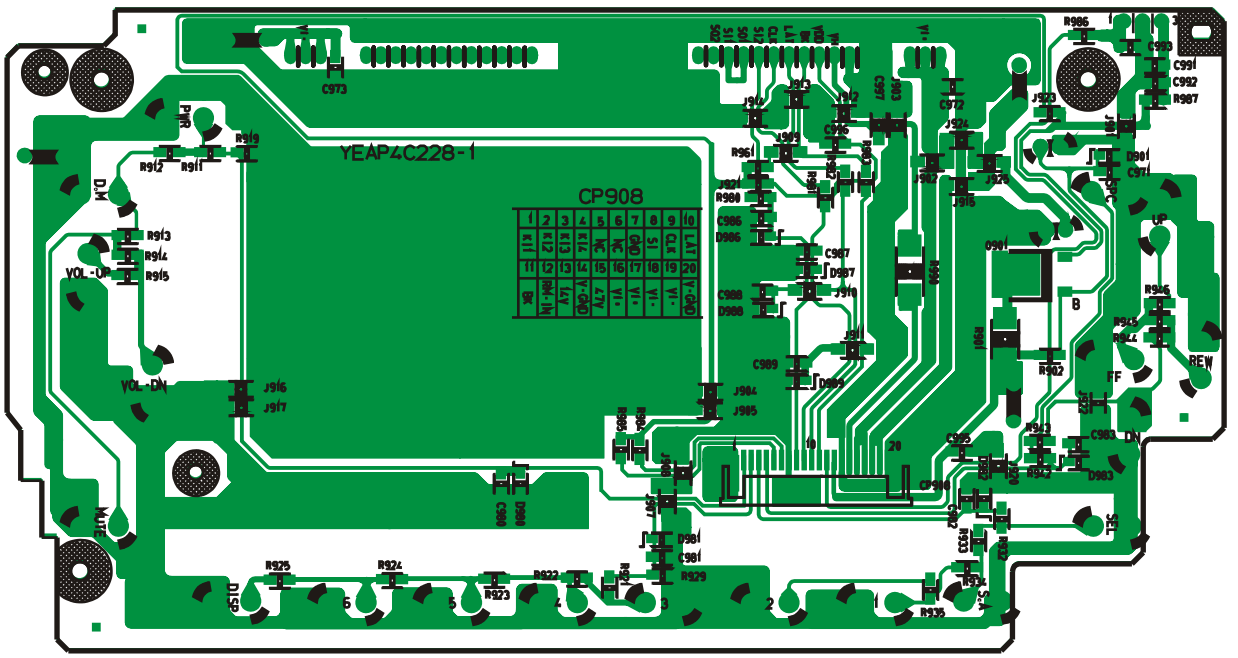

[E-4C228-1][Bottom View]

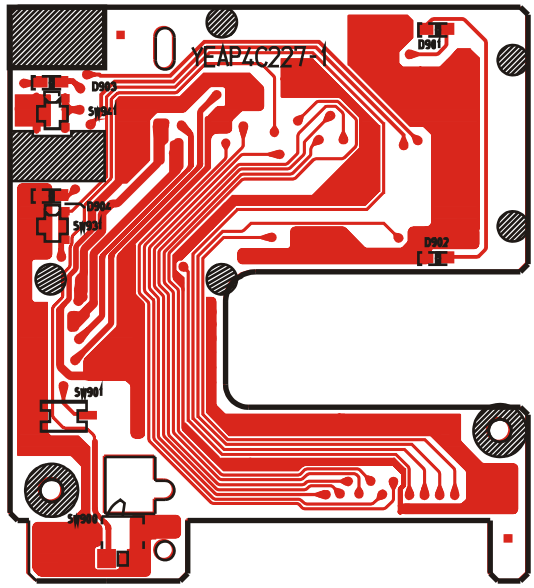

[E-4C227-1][Top View]

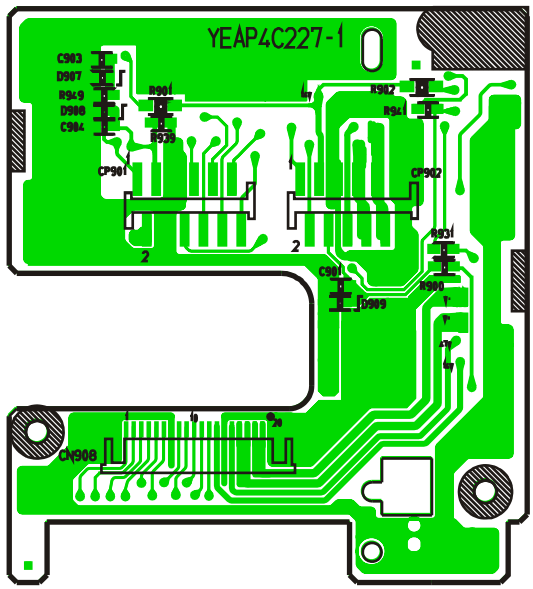

[E-4C227-1][Bottom View]

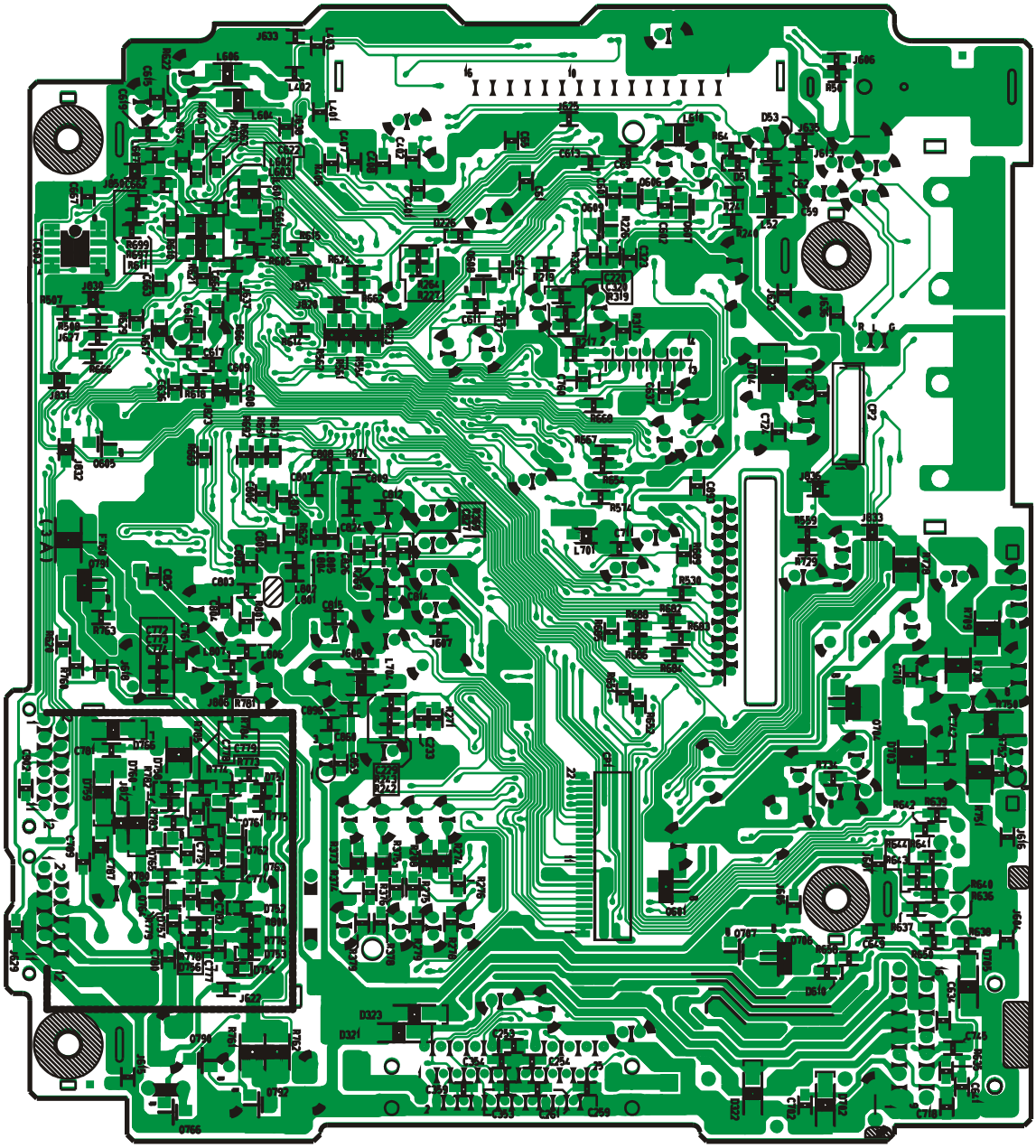

[E-4C250][Bottom View]

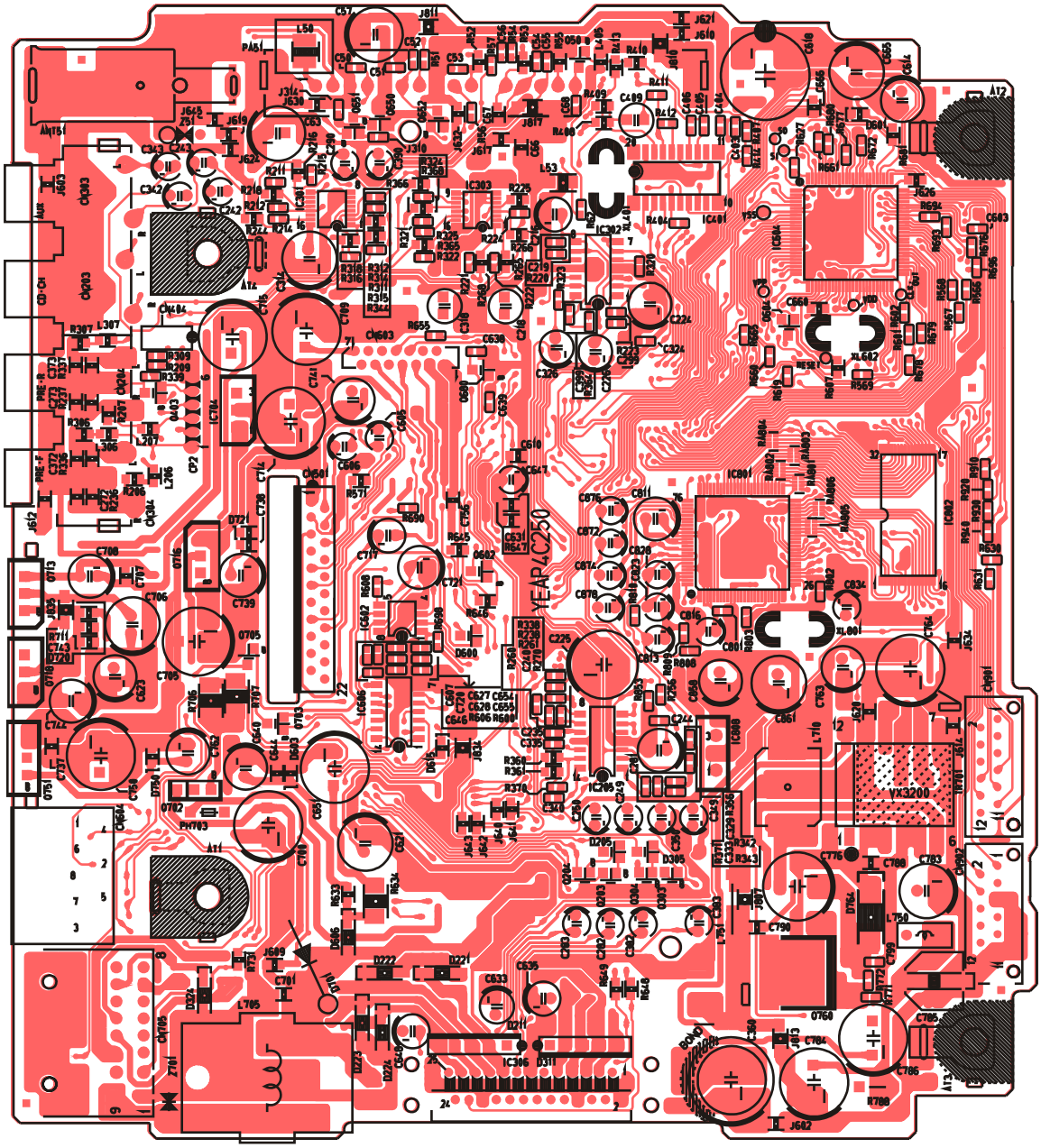

[E-4C250][Top View]

CQ-VX1300W/VX2300W Main PCB

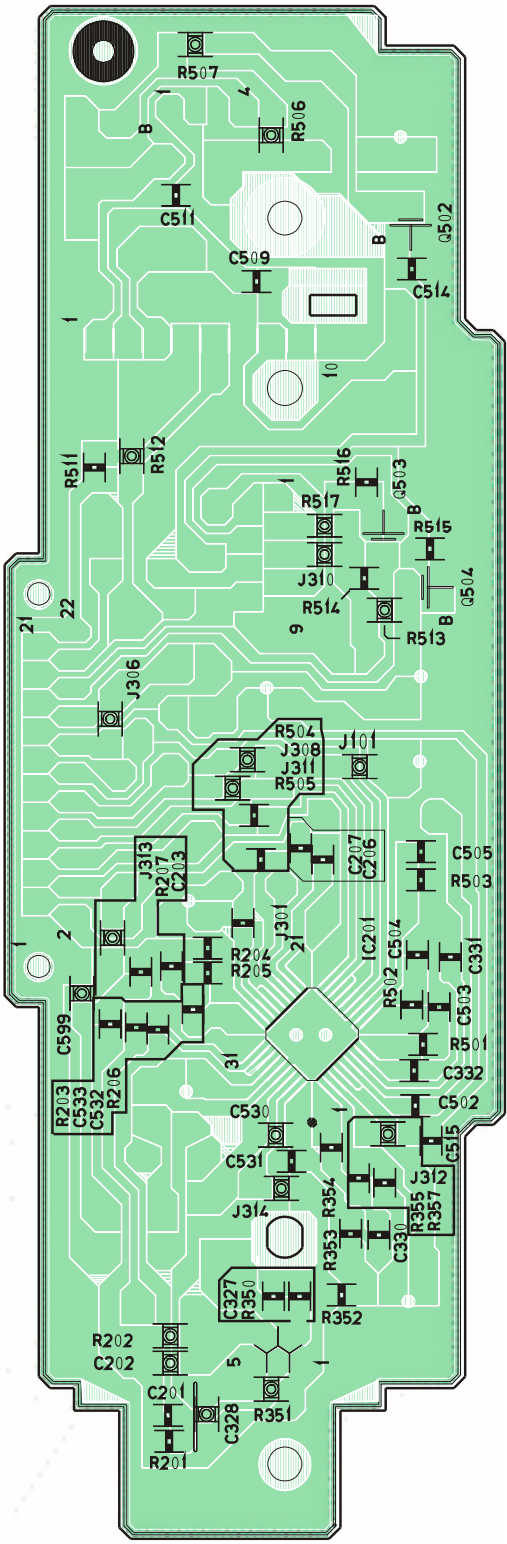

[E-4C176] [BOTTOM VIEW]

CQ-VX1300W/2300W/2000U/2000W
CQ-VX2200U/2200W Tape Deck PCB

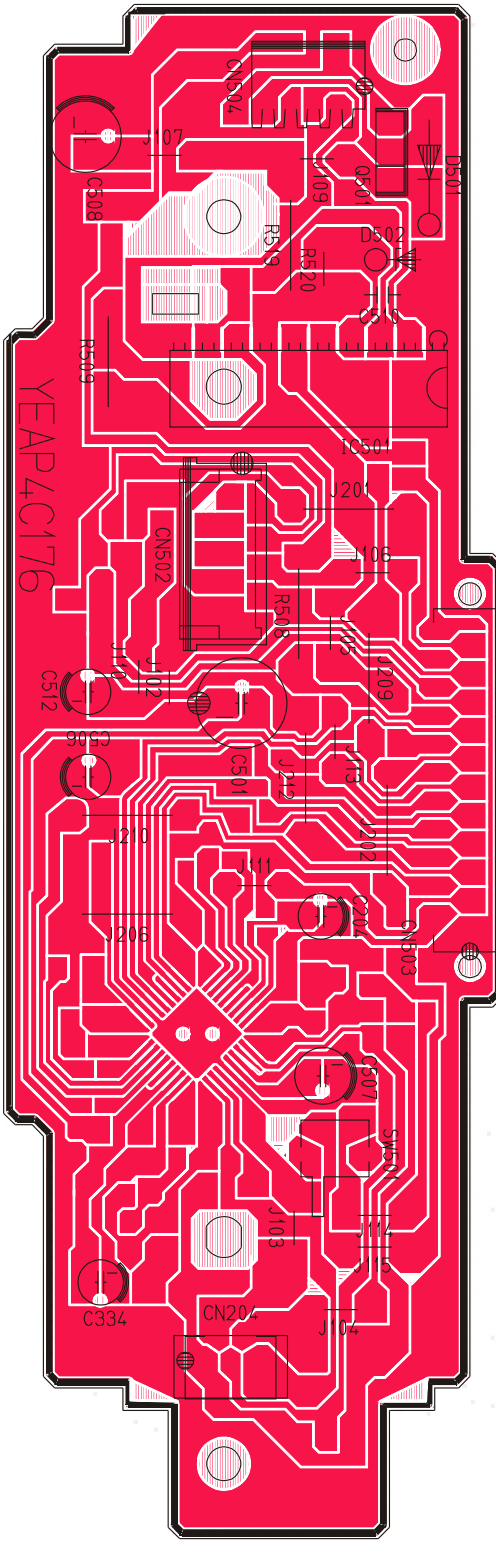

[E-4C176] [TOP VIEW]