Panasonic
Car Audio

Panasonic
FM P-6 87.9
P.SET
VOL
MUTE
MOSFET 50Wx4
MP3/WMA
SIRIUS
MENU
BAND
OPEN

(CQ-HX1083U)

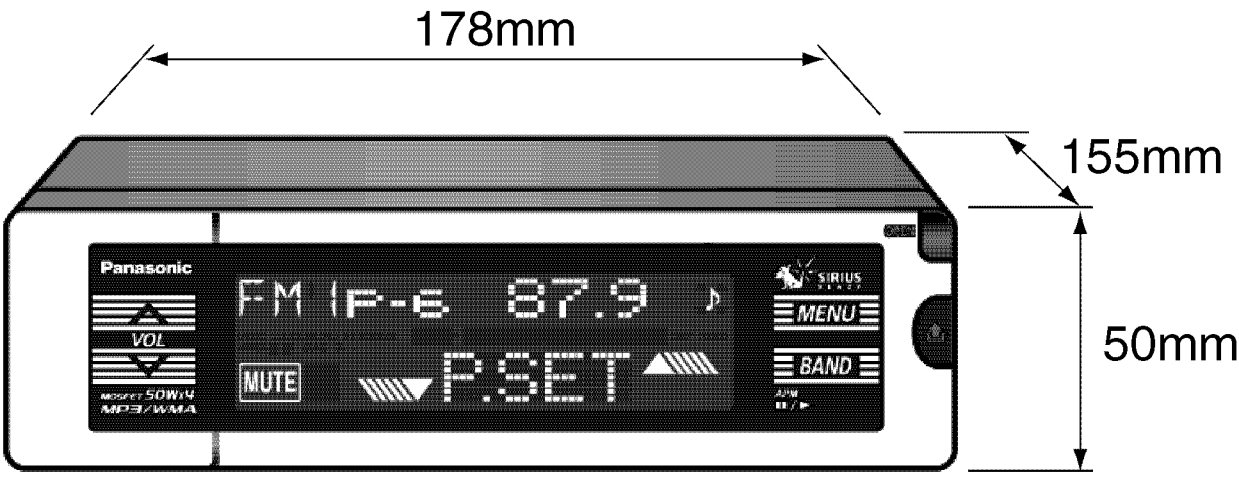
178mm
155mm
50mm
Panasonic
VOL
MUTE
FM P-6 87.9
P.SET
SIRIUS
MENU
BAND
MOSFET 50Wx4
MP3/WMA

Supplement

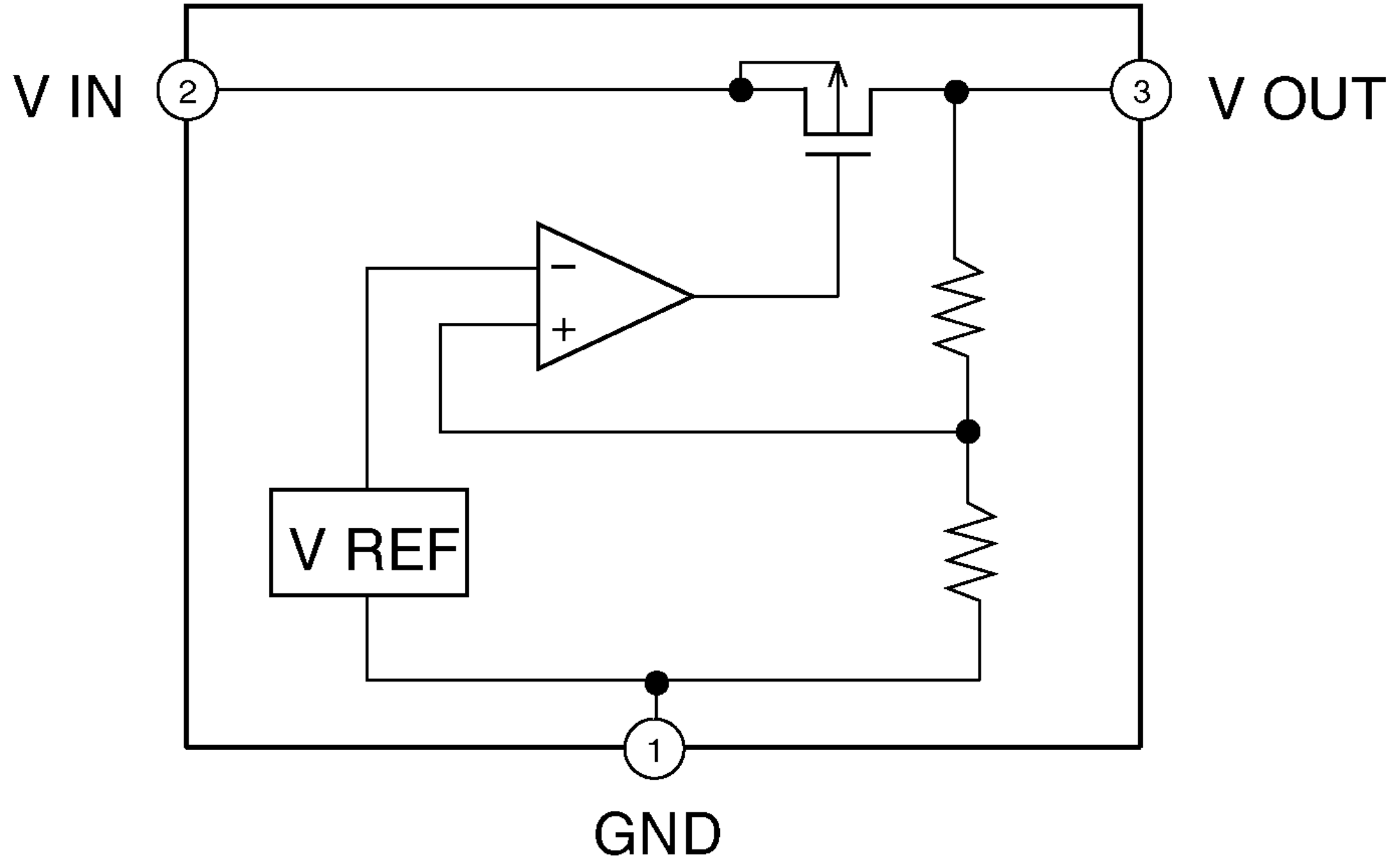
V IN
2
3
V OUT
−
+
V REF
1
GND

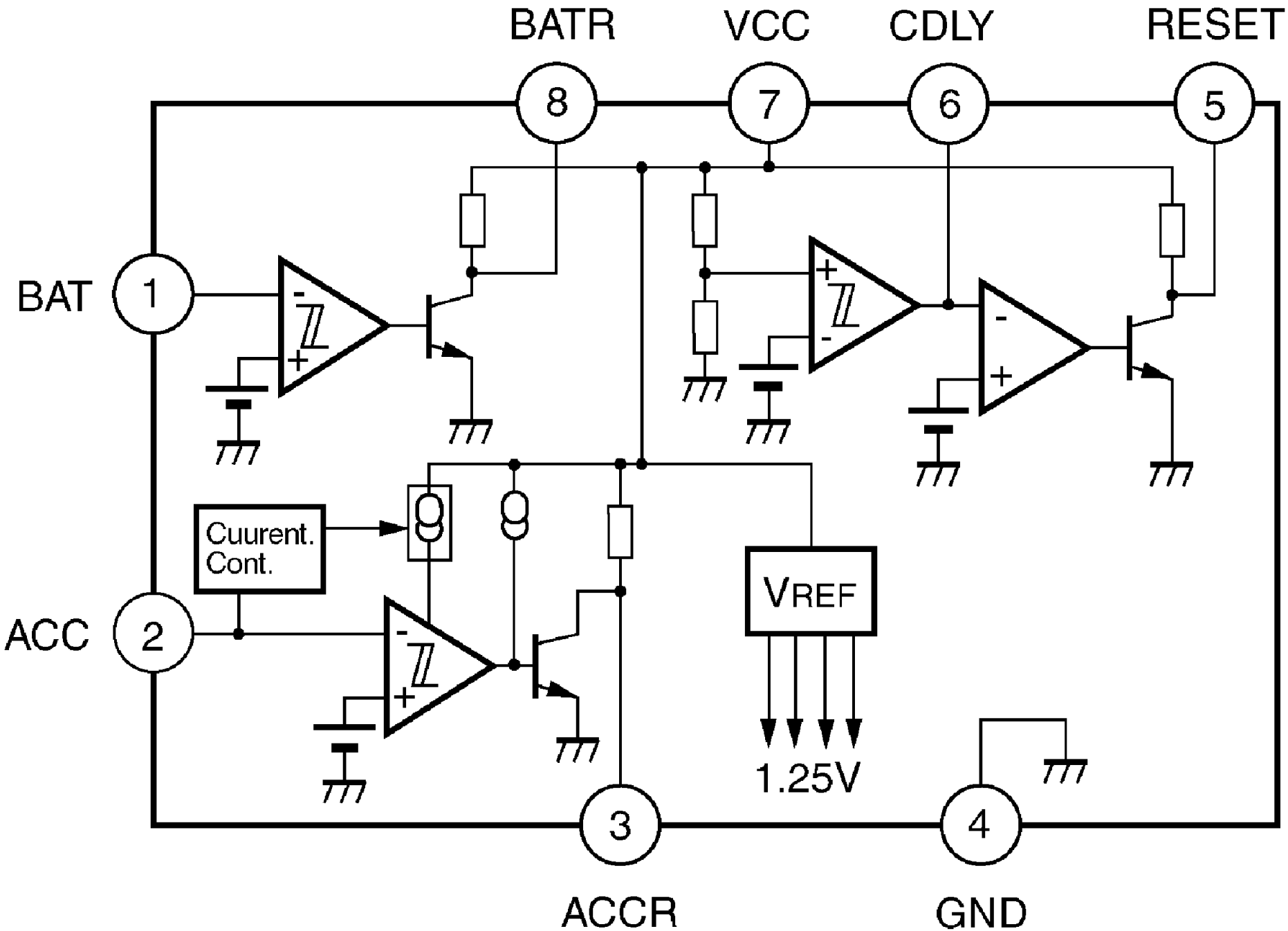
BATR
VCC
CDLY
RESET
8
7
6
5
BAT
1
Cuurent.
Cont.
VREF
ACC
2
1.25V
3
4
ACCR
GND

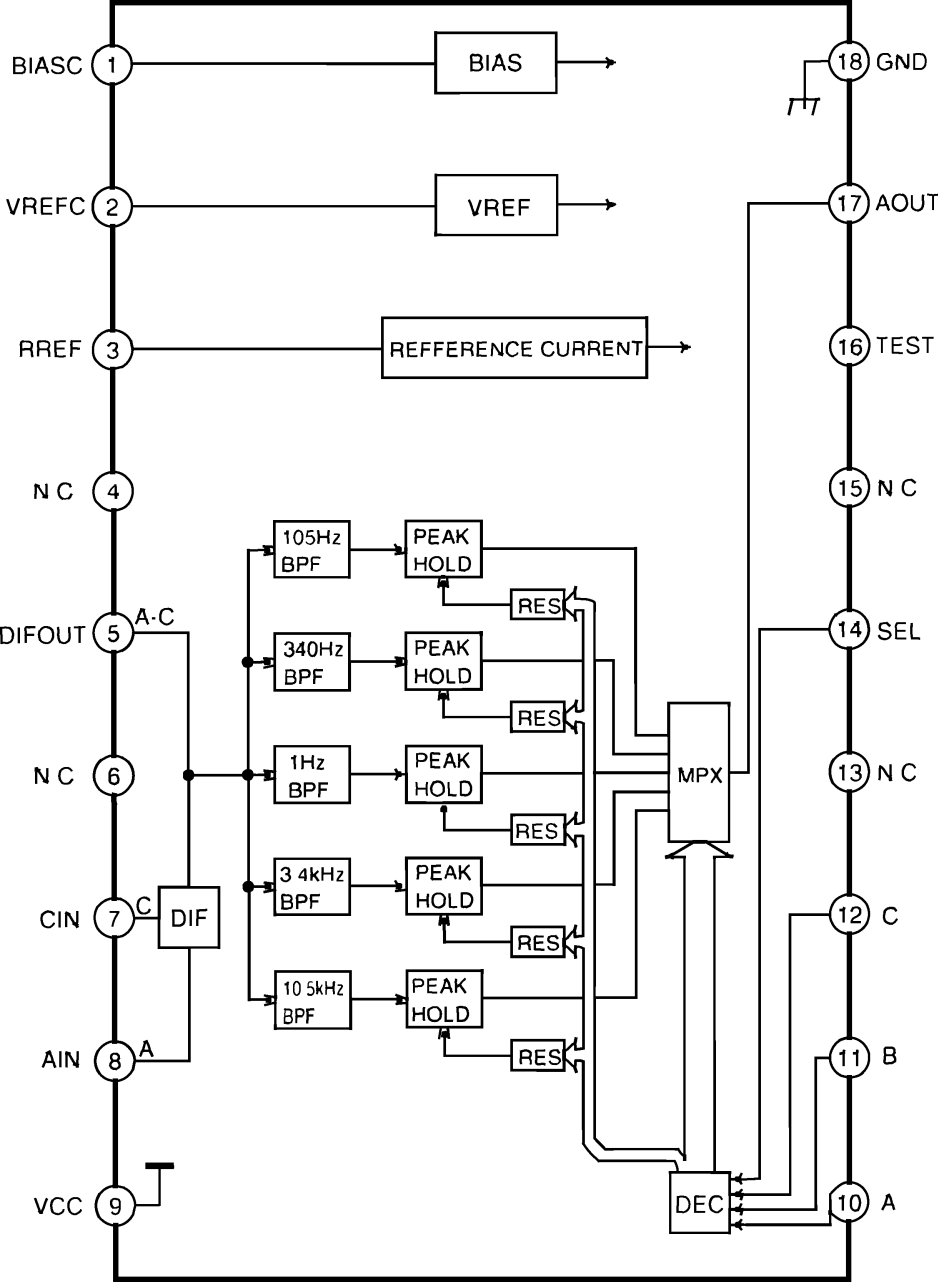
BIASC
1
BIAS
18
GND
VREFC
2
VREF
17
AOUT
RREF
3
REFFERENCE CURRENT
16
TEST
N C
4
15
N C
DIFOUT
5
A-C
14
SEL
N C
6
13
N C
CIN
7
C
DIF
12
C
AIN
8
A
11
B
VCC
9
10
A
105Hz BPF
340Hz BPF
1Hz BPF
3 4kHz BPF
10 5kHz BPF
PEAK HOLD
RES
MPX
DEC

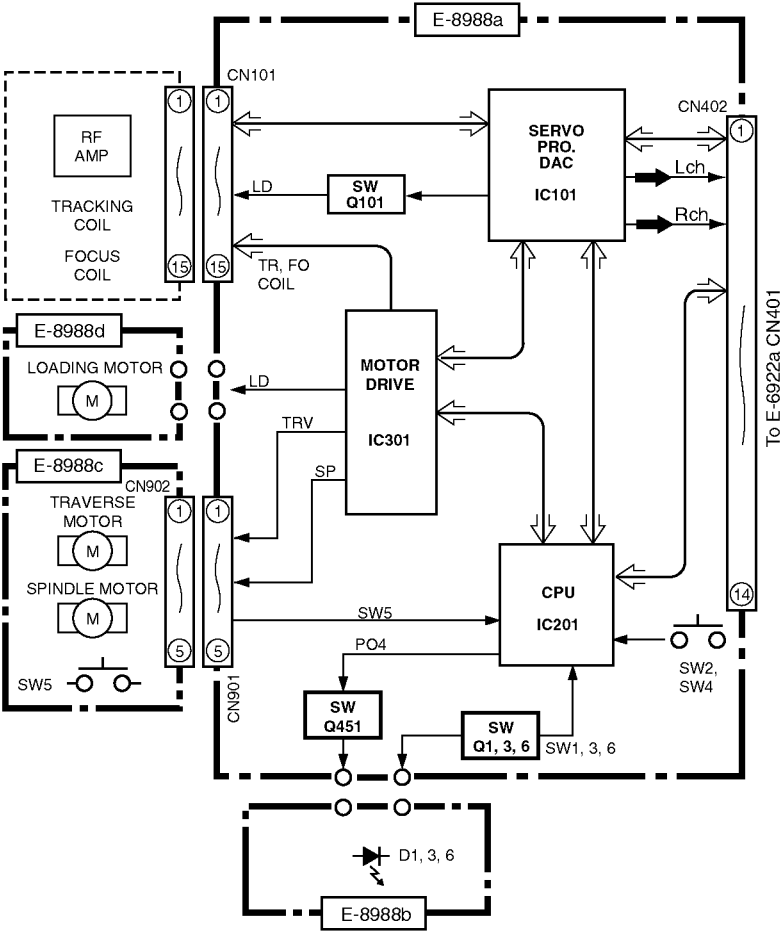
E-8988a
CN101
RF AMP
TRACKING COIL
FOCUS COIL
LD
SW Q101
SERVO PRO. DAC
IC101
CN402
Lch
Rch
TR, FO COIL
E-8988d
LOADING MOTOR
M
LD
MOTOR DRIVE
IC301
TRV
SP
E-8988c
CN902
TRAVERSE MOTOR
M
SPINDLE MOTOR
M
SW5
CN901
CPU
IC201
SW5
PO4
SW2, SW4
SW Q451
SW Q1, 3, 6
SW1, 3, 6
To E-6922a CN401
D1, 3, 6
E-8988b

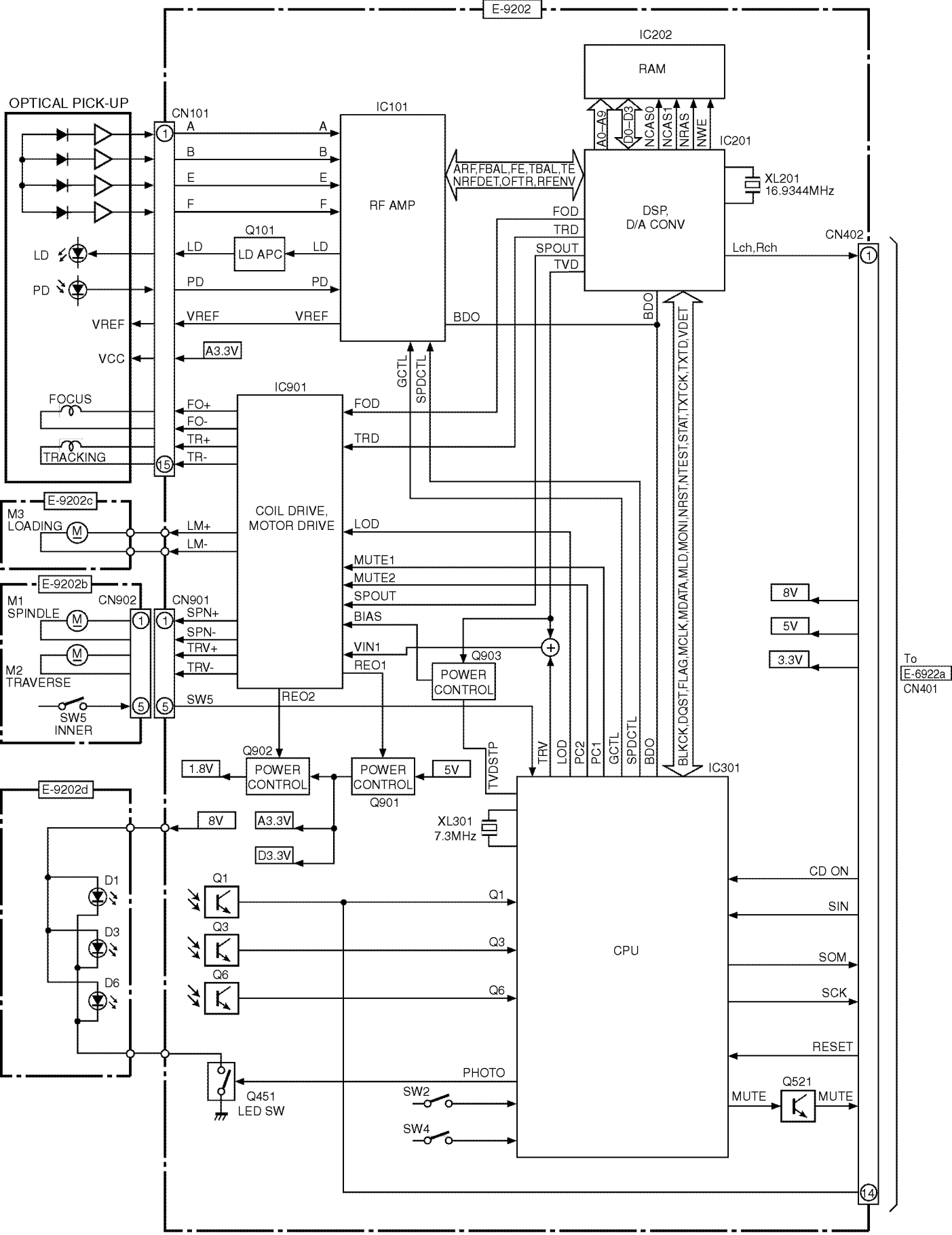
E-9202
OPTICAL PICK-UP
CN101
IC101
RF AMP
IC202
RAM
A0–A9
D0–D3
NCAS0
NCAS1
NRAS
NWE
IC201
DSP,
D/A CONV
XL201
16.9344MHz
ARF,FBAL,FE,TBAL,TE
NRFDET,OFTR,RFENV
FOD
TRD
SPOUT
TVD
Lch,Rch
CN402
A
B
E
F
LD
PD
VREF
VCC
Q101
LD APC
A3.3V
BDO
GCTL
SPDCTL
IC901
FOCUS
TRACKING
FO+
FO-
TR+
TR-
COIL DRIVE,
MOTOR DRIVE
E-9202c
M3
LOADING
LM+
LM-
LOD
MUTE1
MUTE2
SPOUT
BIAS
VIN1
REO1
REO2
E-9202b
M1
SPINDLE
M2
TRAVERSE
CN902
CN901
SPN+
SPN-
TRV+
TRV-
SW5
SW5
INNER
Q903
POWER
CONTROL
Q902
POWER
CONTROL
Q901
1.8V
5V
TVDSTP
TRV
LOD
PC2
PC1
GCTL
SPDCTL
BDO
BLKCK,DQST,FLAG,MCLK,MDATA,MLD,MONI,NRST,NTEST,STAT,TXTCK,TXTD,VDET
IC301
8V
5V
3.3V
To
E-6922a
CN401
E-9202d
8V
A3.3V
D3.3V
XL301
7.3MHz
D1
D3
D6
Q1
Q3
Q6
CPU
CD ON
SIN
SOM
SCK
RESET
PHOTO
Q451
LED SW
SW2
SW4
MUTE
Q521
MUTE

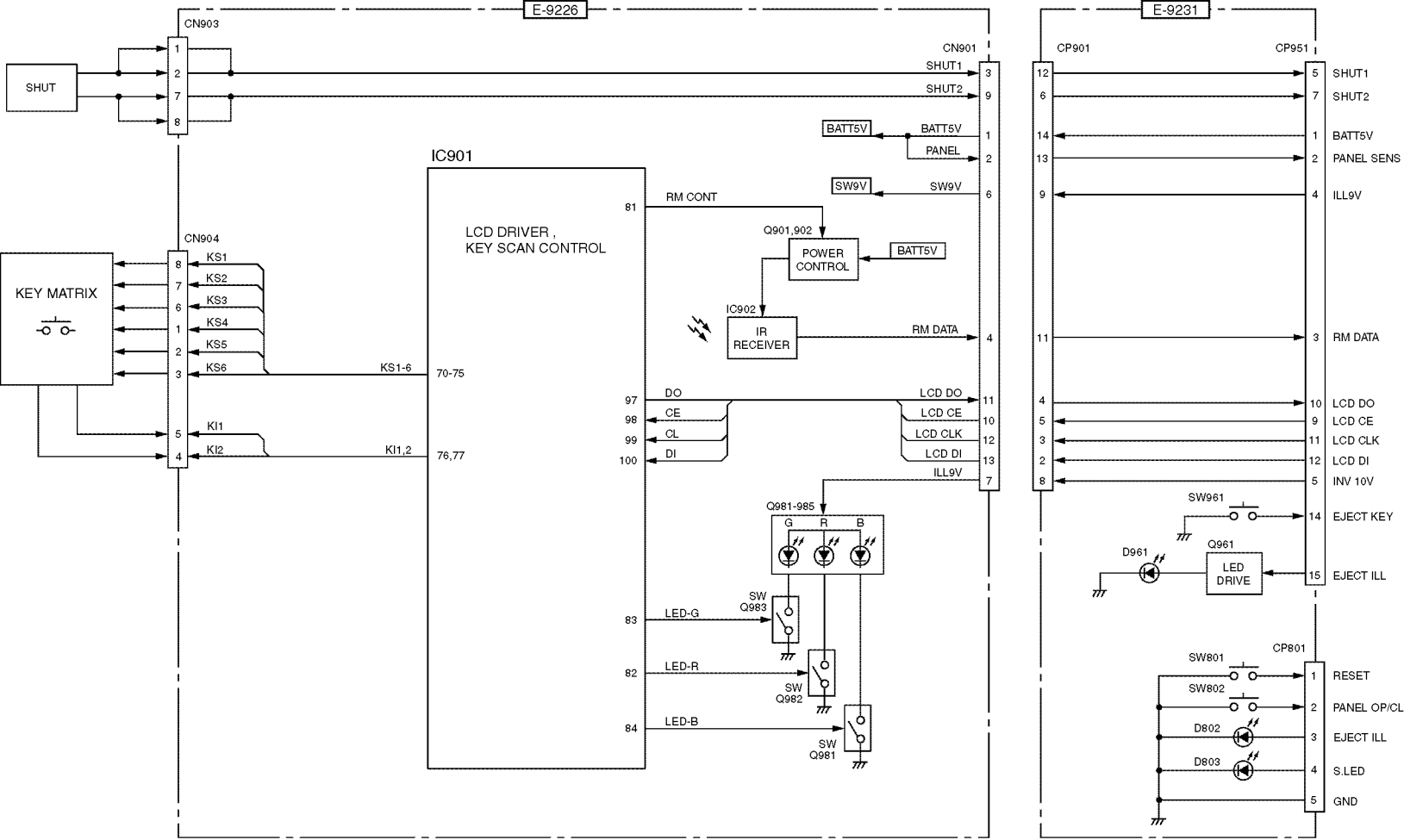
E-9226
E-9231
CN903
SHUT
CN901
SHUT1
SHUT2
BATT5V
PANEL
SW9V
IC901
LCD DRIVER ,
KEY SCAN CONTROL
RM CONT
Q901,902
POWER CONTROL
IC902
IR RECEIVER
RM DATA
CN904
KEY MATRIX
KS1
KS2
KS3
KS4
KS5
KS6
KS1-6
70-75
KI1
KI2
KI1,2
76,77
DO
CE
CL
DI
LCD DO
LCD CE
LCD CLK
LCD DI
ILL9V
Q981-985
G
R
B
SW Q983
SW Q982
SW Q981
LED-G
LED-R
LED-B
CP901
CP951
SHUT1
SHUT2
BATT5V
PANEL SENS
ILL9V
RM DATA
LCD DO
LCD CE
LCD CLK
LCD DI
INV 10V
SW961
EJECT KEY
D961
Q961
LED DRIVE
EJECT ILL
CP801
SW801
SW802
RESET
PANEL OP/CL
D802
EJECT ILL
D803
S.LED
GND

17 BLOCK DIAGRAM

17.1. Main Block

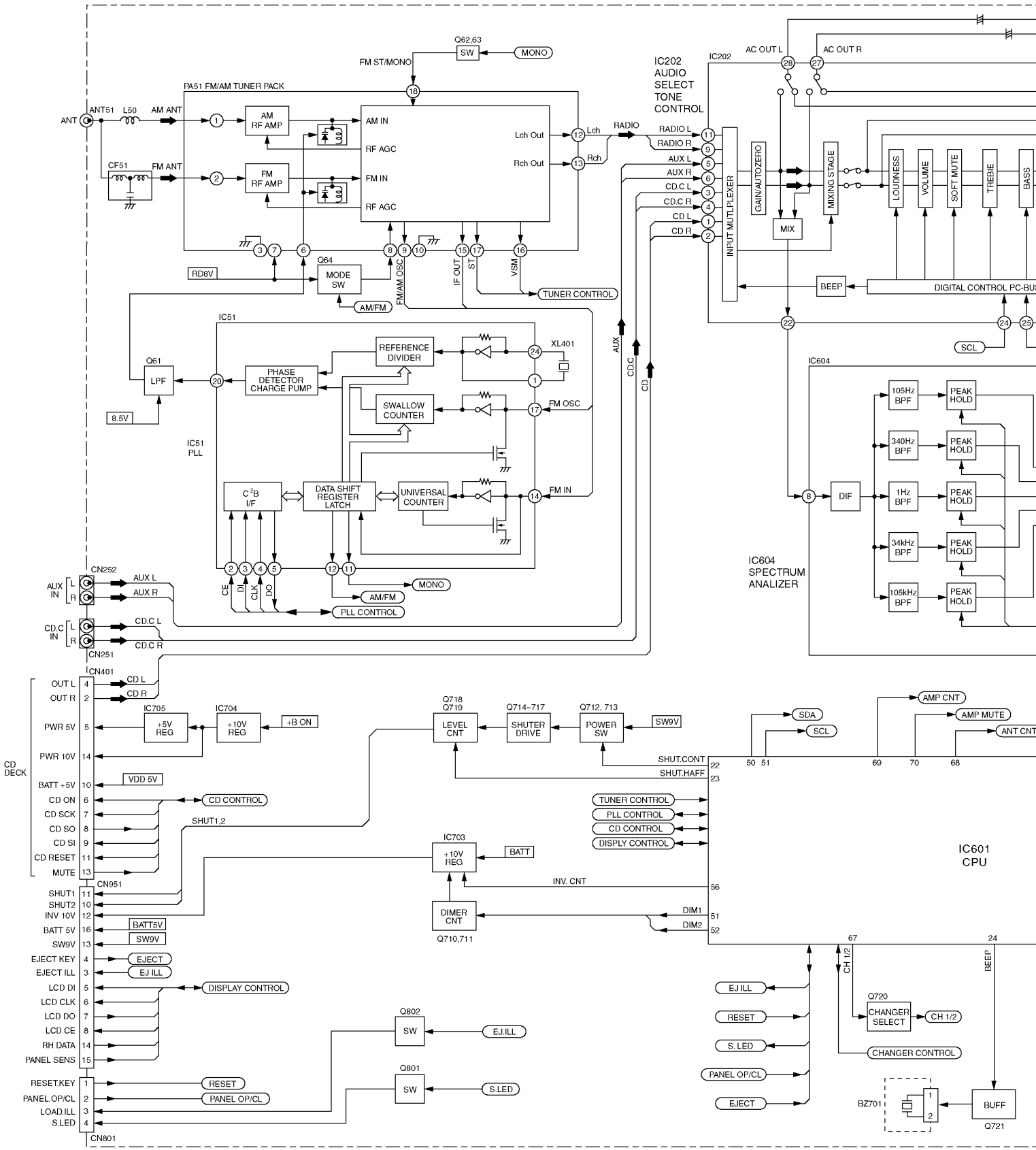

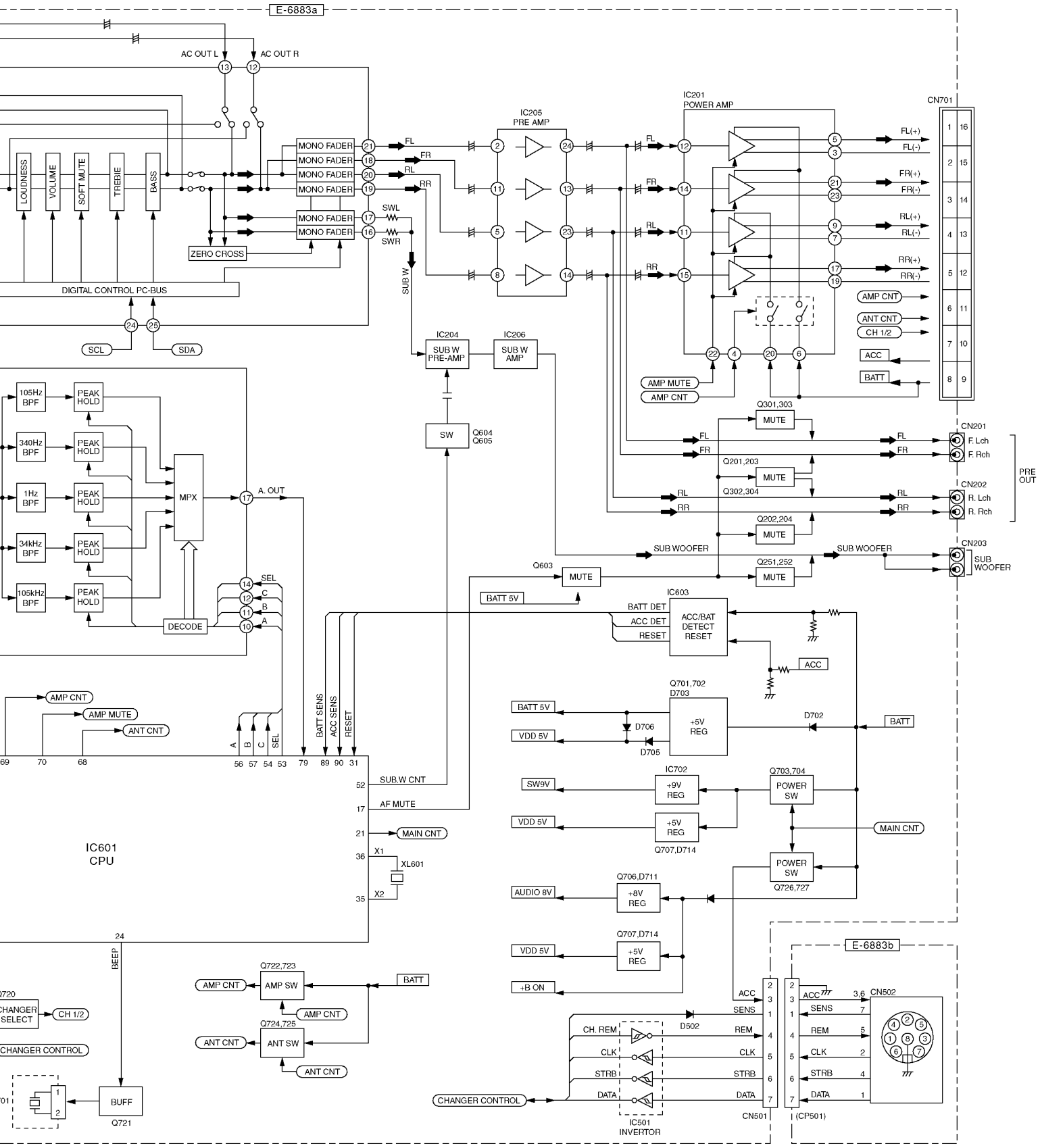

CQ-DF802U Main Block

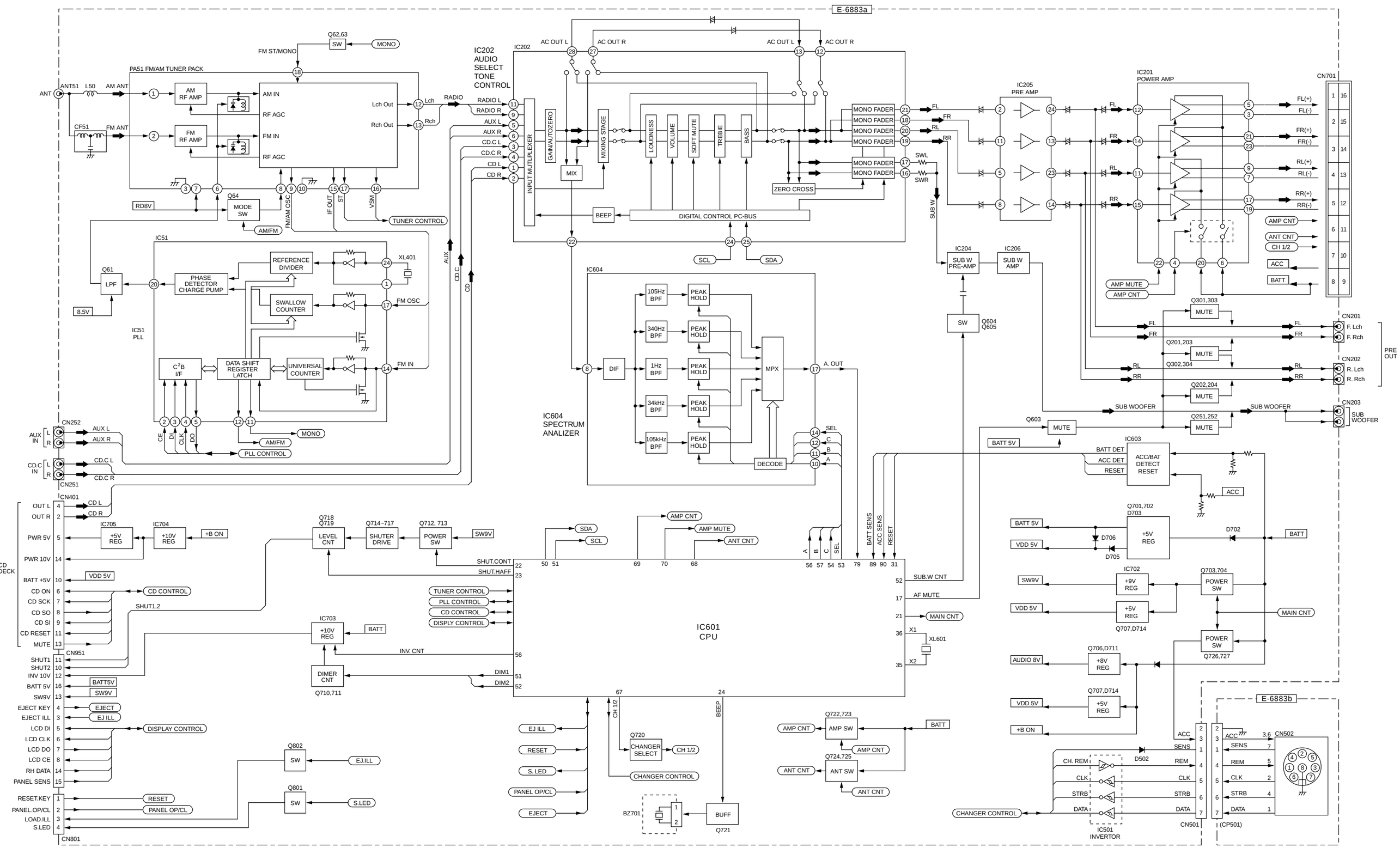

CQ-DF802U Main Block

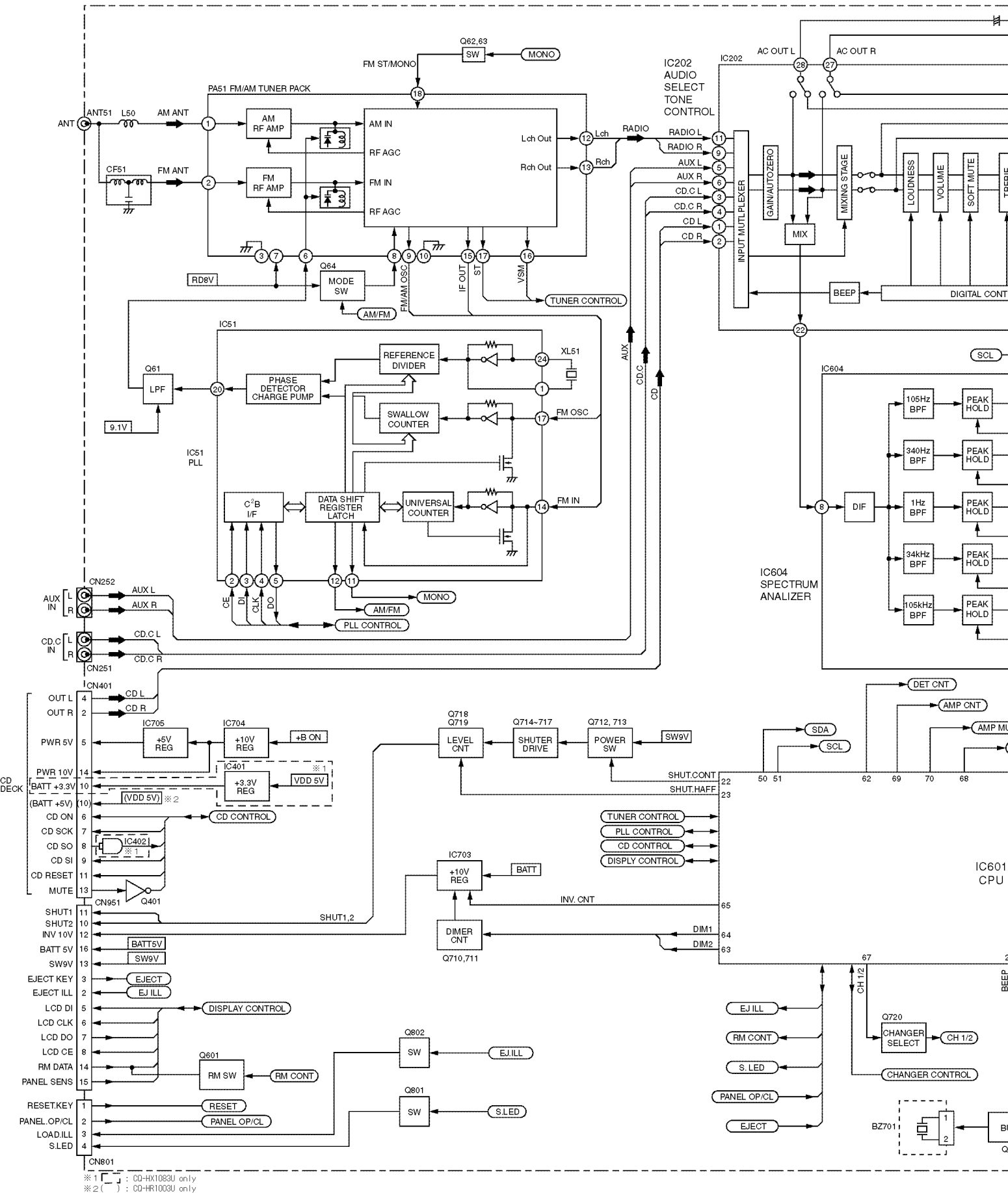
PA51 FM/AM TUNER PACK
ANT
ANT51
L50
AM ANT
CF51
FM ANT
AM RF AMP
FM RF AMP
AM IN
RF AGC
FM IN
RF AGC
Lch Out
Rch Out
Lch
Rch
RADIO
FM ST/MONO
Q62,63
SW
MONO
RD8V
Q64
MODE SW
AM/FM
FM/AM OSC
IF OUT
ST
VSM
TUNER CONTROL
IC202
AUDIO SELECT TONE CONTROL
AC OUT L
AC OUT R
RADIO L
RADIO R
AUX L
AUX R
CD.C L
CD.C R
CD L
CD R
INPUT MUTLPLEXER
GAIN/AUTOZERO
MIX
MIXING STAGE
LOUDNESS
VOLUME
SOFT MUTE
BEEP
DIGITAL CONT
IC51
PLL
Q61
LPF
9.1V
PHASE DETECTOR CHARGE PUMP
REFERENCE DIVIDER
XL51
SWALLOW COUNTER
FM OSC
C²B I/F
DATA SHIFT REGISTER LATCH
UNIVERSAL COUNTER
FM IN
CE
DI
CLK
DO
MONO
AM/FM
PLL CONTROL
AUX
CD.C
CD
IC604
SPECTRUM ANALIZER
SCL
DIF
105Hz BPF
340Hz BPF
1Hz BPF
34kHz BPF
105kHz BPF
PEAK HOLD
CN252
AUX IN
AUX L
AUX R
CD.C IN
CD.C L
CD.C R
CN251
CN401
OUT L
OUT R
CD L
CD R
PWR 5V
PWR 10V
BATT +3.3V
(BATT +5V)
CD ON
CD SCK
CD SO
CD SI
CD RESET
MUTE
CD DECK
IC705
+5V REG
IC704
+10V REG
+B ON
IC401
+3.3V REG
VDD 5V
(VDD 5V)
※2
※1
CD CONTROL
IC402
Q401
Q718
Q719
LEVEL CNT
Q714~717
SHUTER DRIVE
Q712, 713
POWER SW
SW9V
SDA
SCL
DET CNT
AMP CNT
SHUT.CONT
SHUT.HAFF
TUNER CONTROL
PLL CONTROL
CD CONTROL
DISPLY CONTROL
IC703
+10V REG
BATT
INV. CNT
DIMER CNT
Q710,711
DIM1
DIM2
IC601
CPU
CN951
SHUT1
SHUT2
INV 10V
BATT 5V
SW9V
SHUT1,2
BATT5V
EJECT KEY
EJECT ILL
EJECT
EJ ILL
LCD DI
LCD CLK
LCD DO
LCD CE
RM DATA
PANEL SENS
DISPLAY CONTROL
Q601
RM SW
RM CONT
Q802
SW
EJ ILL
Q801
SW
S.LED
RESET.KEY
PANEL.OP/CL
LOAD.ILL
S.LED
RESET
PANEL OP/CL
CN801
CH 1/2
Q720
CHANGER SELECT
CHANGER CONTROL
BEEP
BZ701
※1 [ ] : CQ-HX1083U only
※2 ( ) : CQ-HR1003U only

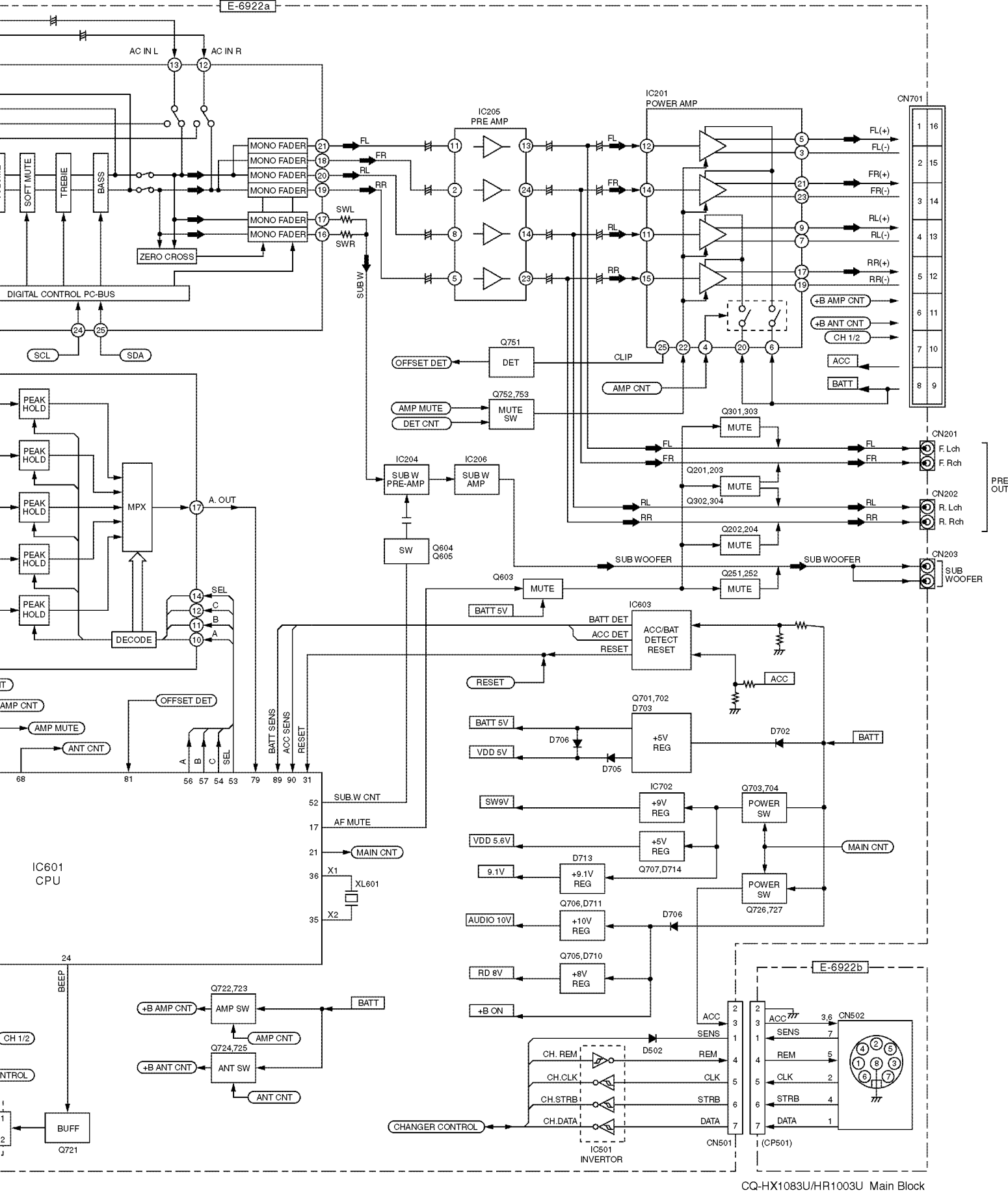
E-6922a
AC IN L
AC IN R
SOFT MUTE
TREBLE
BASS
MONO FADER
ZERO CROSS
DIGITAL CONTROL PC-BUS
SCL
SDA
SWL
SWR
SUB W
IC205
PRE AMP
IC201
POWER AMP
CN701
FL(+)
FL(-)
FR(+)
FR(-)
RL(+)
RL(-)
RR(+)
RR(-)
+B AMP CNT
+B ANT CNT
CH 1/2
ACC
BATT
CLIP
AMP CNT
Q751
DET
OFFSET DET
Q752,753
MUTE SW
AMP MUTE
DET CNT
Q301,303
MUTE
Q201,203
Q302,304
Q202,204
Q251,252
CN201
F. Lch
F. Rch
CN202
R. Lch
R. Rch
PRE OUT
CN203
SUB WOOFER
IC204
SUB W PRE-AMP
IC206
SUB W AMP
SW
Q604
Q605
Q603
BATT 5V
PEAK HOLD
MPX
A. OUT
DECODE
SEL
IC603
ACC/BAT DETECT RESET
BATT DET
ACC DET
RESET
Q701,702
D703
+5V REG
D702
D706
D705
VDD 5V
IC702
+9V REG
SW9V
Q703,704
POWER SW
VDD 5.6V
+5V REG
Q707,D714
MAIN CNT
D713
+9.1V REG
9.1V
Q726,727
Q706,D711
+10V REG
AUDIO 10V
Q705,D710
+8V REG
RD 8V
+B ON
IC601
CPU
BATT SENS
ACC SENS
SUB.W CNT
AF MUTE
X1
XL601
X2
BEEP
Q722,723
AMP SW
Q724,725
ANT SW
ANT CNT
BUFF
Q721
E-6922b
CN502
CN501
(CP501)
CH. REM
CH.CLK
CH.STRB
CH.DATA
CHANGER CONTROL
IC501
INVERTOR
D502
SENS
REM
CLK
STRB
DATA

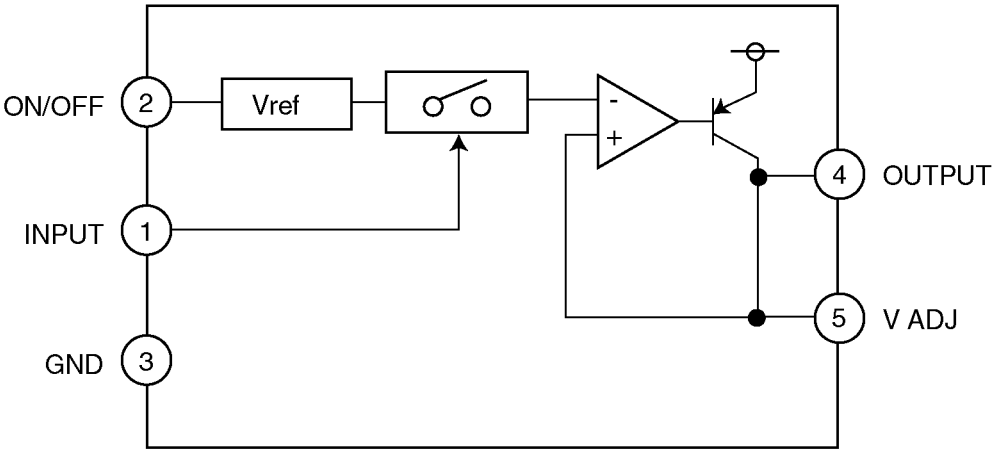
ON/OFF
2
Vref
INPUT
1
GND
3
-
+
4
OUTPUT
5
V ADJ

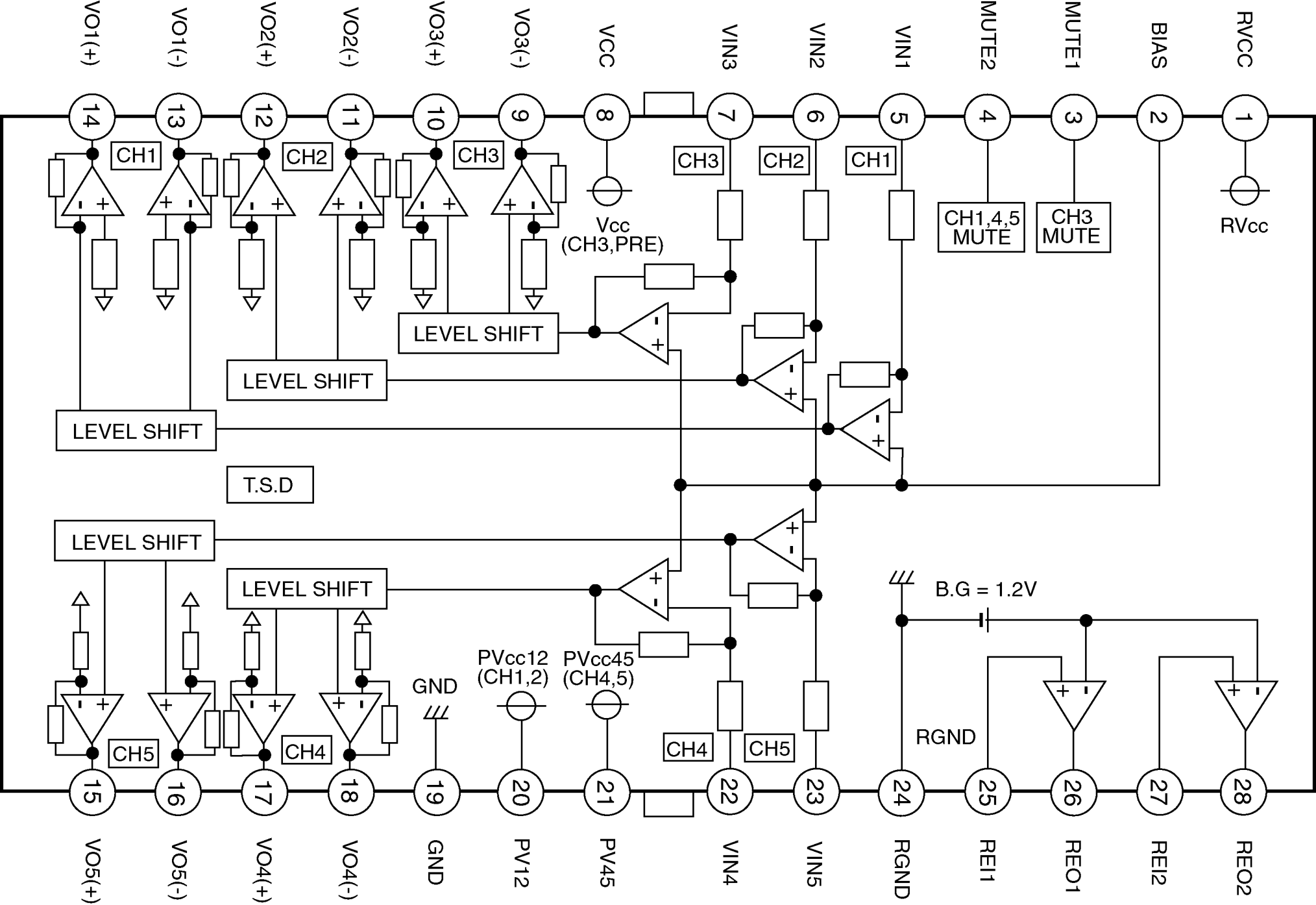
VO1(+)
VO1(-)
VO2(+)
VO2(-)
VO3(+)
VO3(-)
VCC
VIN3
VIN2
VIN1
MUTE2
MUTE1
BIAS
RVCC
14
13
12
11
10
9
8
7
6
5
4
3
2
1
CH1
CH2
CH3
CH3
CH2
CH1
Vcc
(CH3,PRE)
CH1,4,5
MUTE
CH3
MUTE
RVcc
LEVEL SHIFT
LEVEL SHIFT
LEVEL SHIFT
T.S.D
LEVEL SHIFT
LEVEL SHIFT
B.G = 1.2V
PVcc12
(CH1,2)
PVcc45
(CH4,5)
GND
CH5
CH4
CH4
CH5
RGND
15
16
17
18
19
20
21
22
23
24
25
26
27
28
VO5(+)
VO5(-)
VO4(+)
VO4(-)
GND
PV12
PV45
VIN4
VIN5
RGND
REI1
REO1
REI2
REO2

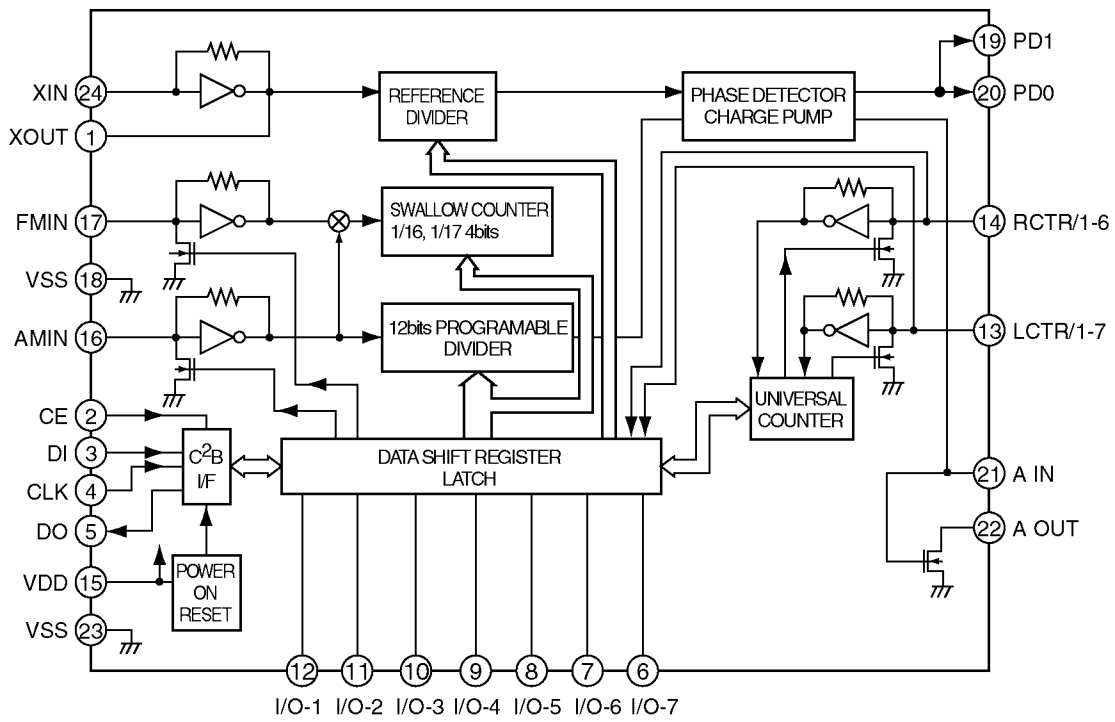
XIN
24
XOUT
1
FMIN
17
VSS
18
AMIN
16
CE
2
DI
3
CLK
4
DO
5
VDD
15
VSS
23
REFERENCE DIVIDER
PHASE DETECTOR CHARGE PUMP
SWALLOW COUNTER 1/16, 1/17 4bits
12bits PROGRAMABLE DIVIDER
C2B I/F
DATA SHIFT REGISTER LATCH
POWER ON RESET
UNIVERSAL COUNTER
19
PD1
20
PD0
14
RCTR/1-6
13
LCTR/1-7
21
A IN
22
A OUT
12
11
10
9
8
7
6
I/O-1
I/O-2
I/O-3
I/O-4
I/O-5
I/O-6
I/O-7

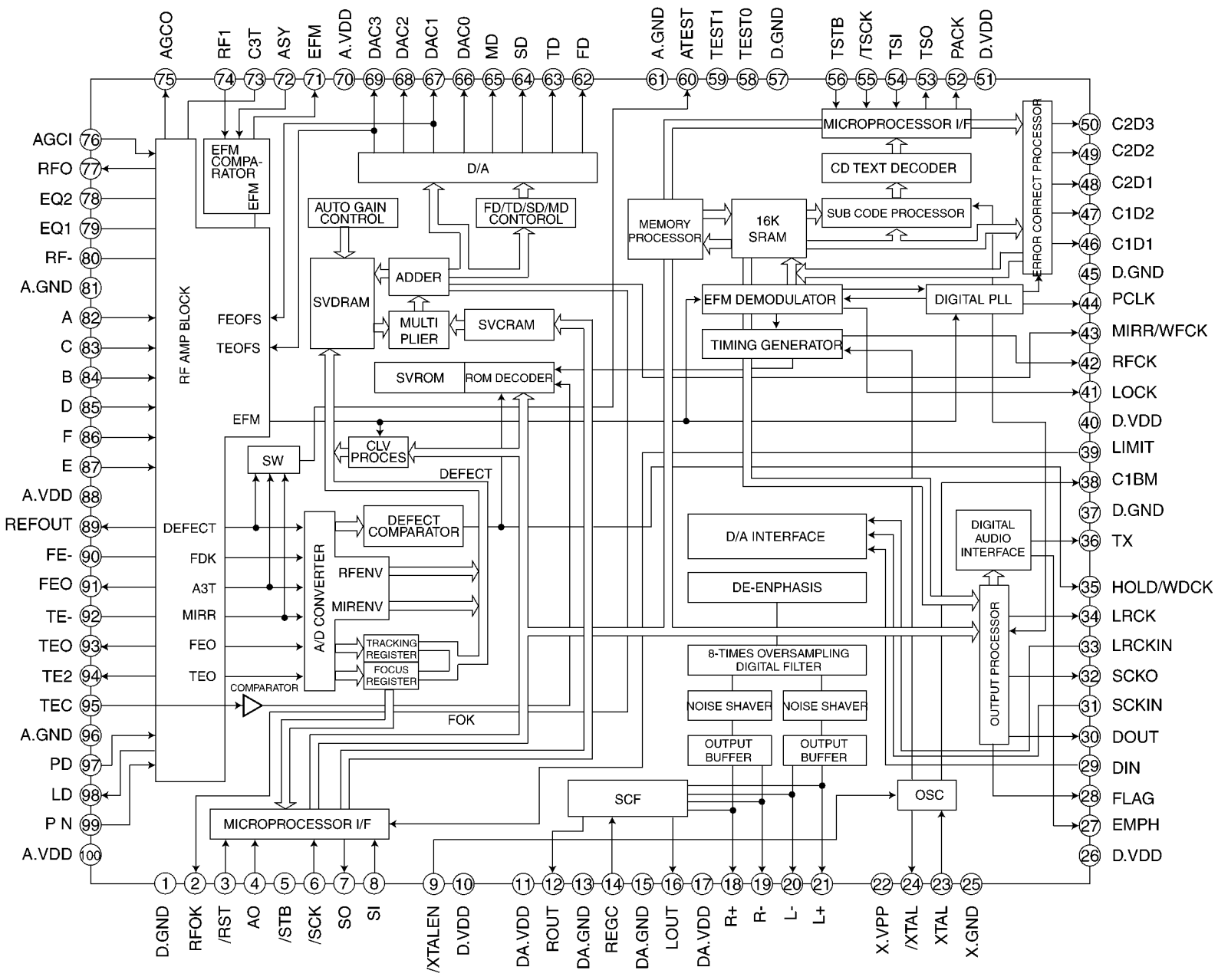
AGCO 75
RF1 74
C3T 73
ASY 72
EFM 71
A.VDD 70
DAC3 69
DAC2 68
DAC1 67
DAC0 66
MD 65
SD 64
TD 63
FD 62
A.GND 61
ATEST 60
TEST1 59
TEST0 58
D.GND 57
TSTB 56
/TSCK 55
TSI 54
TSO 53
PACK 52
D.VDD 51
AGCI 76
RFO 77
EQ2 78
EQ1 79
RF- 80
A.GND 81
A 82
C 83
B 84
D 85
F 86
E 87
A.VDD 88
REFOUT 89
FE- 90
FEO 91
TE- 92
TEO 93
TE2 94
TEC 95
A.GND 96
PD 97
LD 98
P N 99
A.VDD 100
C2D3 50
C2D2 49
C2D1 48
C1D2 47
C1D1 46
D.GND 45
PCLK 44
MIRR/WFCK 43
RFCK 42
LOCK 41
D.VDD 40
LIMIT 39
C1BM 38
D.GND 37
TX 36
HOLD/WDCK 35
LRCK 34
LRCKIN 33
SCKO 32
SCKIN 31
DOUT 30
DIN 29
FLAG 28
EMPH 27
D.VDD 26
D.GND 1
RFOK 2
/RST 3
AO 4
/STB 5
/SCK 6
SO 7
SI 8
/XTALEN 9
D.VDD 10
DA.VDD 11
ROUT 12
DA.GND 13
REGC 14
DA.GND 15
LOUT 16
DA.VDD 17
R+ 18
R- 19
L- 20
L+ 21
X.VPP 22
/XTAL 24
XTAL 23
X.GND 25
RF AMP BLOCK
EFM COMPA-RATOR
EFM
FEOFS
TEOFS
EFM
DEFECT
FDK
A3T
MIRR
FEO
TEO
COMPARATOR
FOK
D/A
AUTO GAIN CONTROL
FD/TD/SD/MD CONTOROL
SVDRAM
ADDER
MULTI PLIER
SVCRAM
SVROM
ROM DECODER
SW
CLV PROCES
DEFECT
DEFECT COMPARATOR
A/D CONVERTER
RFENV
MIRENV
TRACKING REGISTER
FOCUS REGISTER
MICROPROCESSOR I/F
MEMORY PROCESSOR
16K SRAM
MICROPROCESSOR I/F
CD TEXT DECODER
SUB CODE PROCESSOR
ERROR CORRECT PROCESSOR
EFM DEMODULATOR
DIGITAL PLL
TIMING GENERATOR
D/A INTERFACE
DE-ENPHASIS
DIGITAL AUDIO INTERFACE
OUTPUT PROCESSOR
8-TIMES OVERSAMPLING DIGITAL FILTER
NOISE SHAVER
NOISE SHAVER
OUTPUT BUFFER
OUTPUT BUFFER
SCF
OSC
MICROPROCESSOR I/F

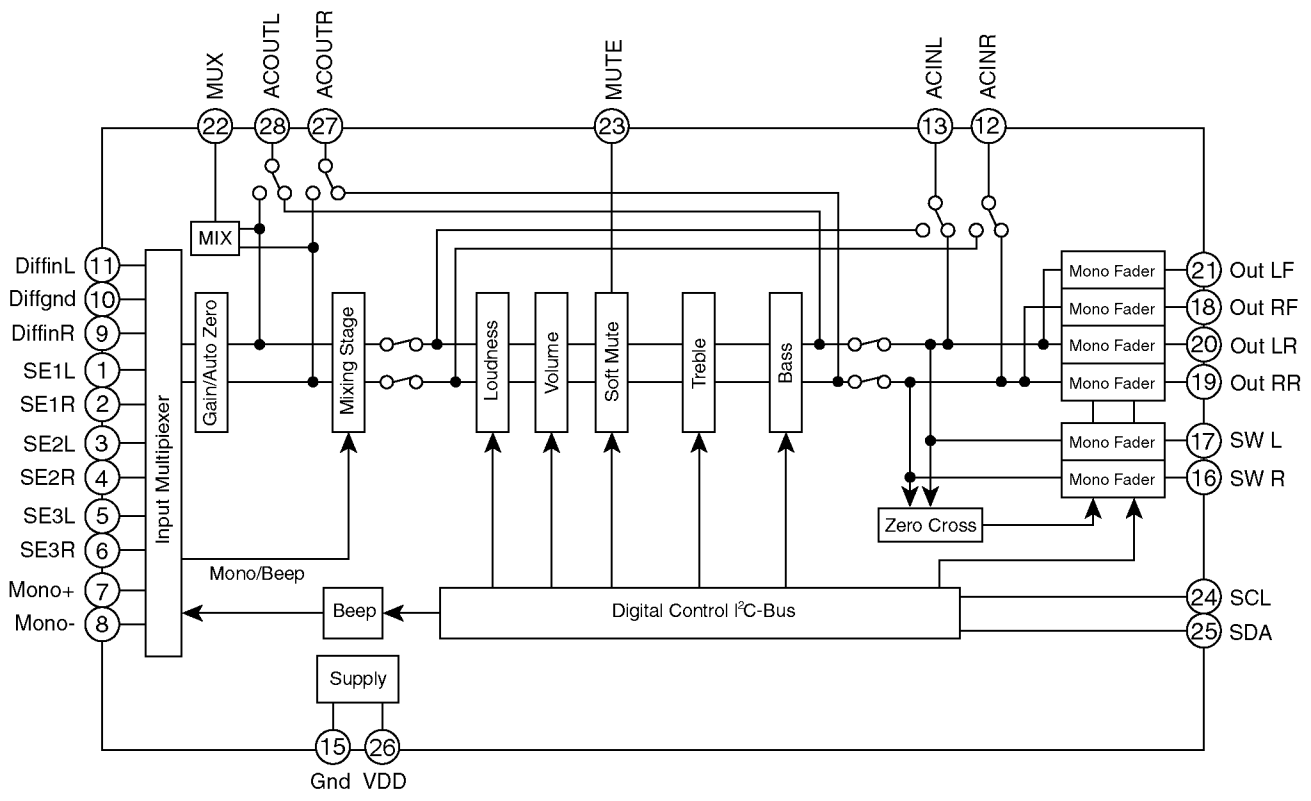
MUX
ACOUTL
ACOUTR
MUTE
ACINL
ACINR
22
28
27
23
13
12
MIX
DiffinL
Diffgnd
DiffinR
SE1L
SE1R
SE2L
SE2R
SE3L
SE3R
Mono+
Mono-
11
10
9
1
2
3
4
5
6
7
8
Input Multipiexer
Gain/Auto Zero
Mixing Stage
Loudness
Volume
Soft Mute
Treble
Bass
Mono Fader
Mono Fader
Mono Fader
Mono Fader
Mono Fader
Mono Fader
21
18
20
19
17
16
Out LF
Out RF
Out LR
Out RR
SW L
SW R
Zero Cross
Mono/Beep
Beep
Digital Control I²C-Bus
24
25
SCL
SDA
Supply
15
26
Gnd
VDD

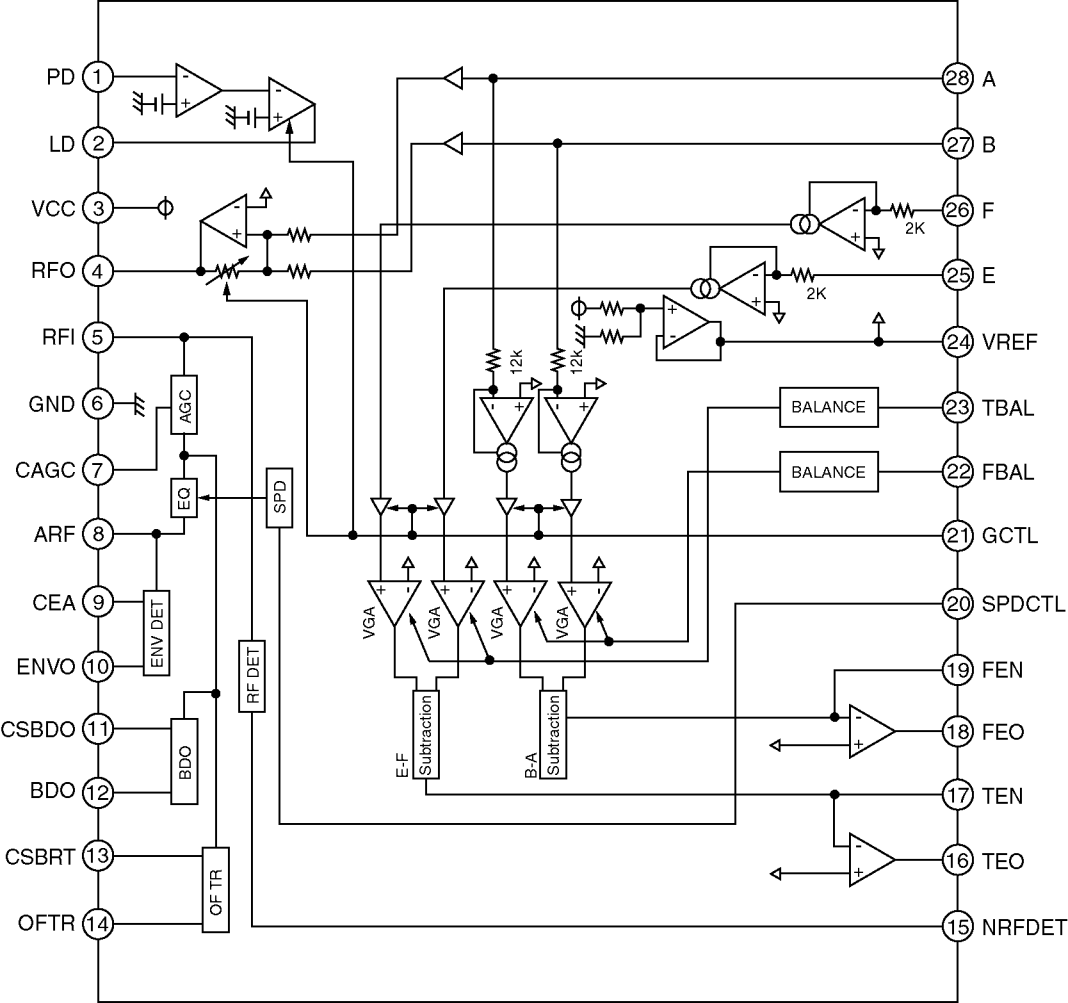
PD 1
LD 2
VCC 3
RFO 4
RFI 5
GND 6
CAGC 7
ARF 8
CEA 9
ENVO 10
CSBDO 11
BDO 12
CSBRT 13
OFTR 14
28 A
27 B
26 F
25 E
24 VREF
23 TBAL
22 FBAL
21 GCTL
20 SPDCTL
19 FEN
18 FEO
17 TEN
16 TEO
15 NRFDET
AGC
EQ
SPD
ENV DET
RF DET
BDO
OF TR
12k
12k
2K
2K
BALANCE
BALANCE
VGA
VGA
VGA
VGA
E-F Subtraction
B-A Subtraction

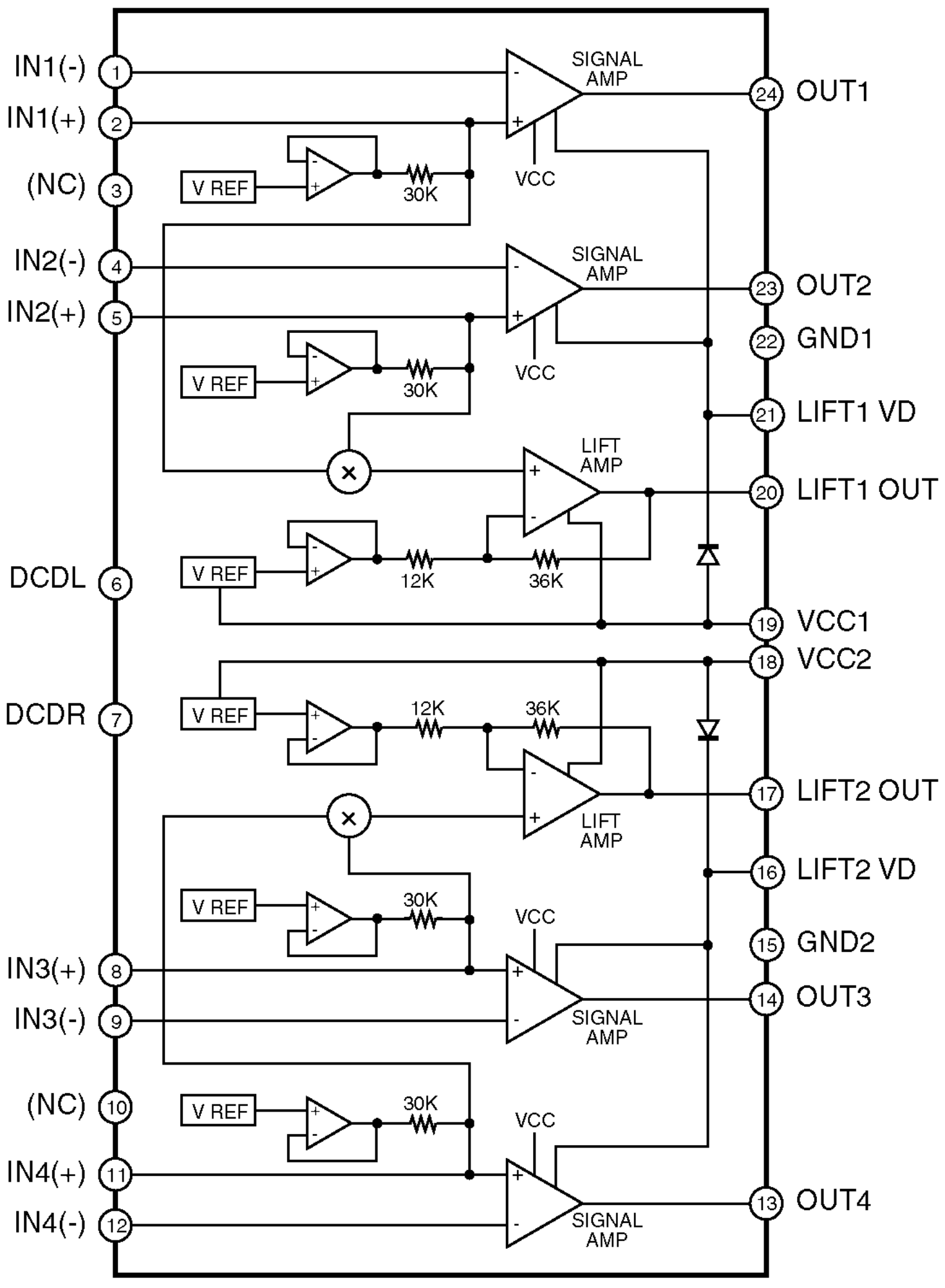
IN1(-)
1
IN1(+)
2
(NC)
3
IN2(-)
4
IN2(+)
5
DCDL
6
DCDR
7
IN3(+)
8
IN3(-)
9
(NC)
10
IN4(+)
11
IN4(-)
12
SIGNAL AMP
VCC
V REF
30K
LIFT AMP
12K
36K
24
OUT1
23
OUT2
22
GND1
21
LIFT1 VD
20
LIFT1 OUT
19
VCC1
18
VCC2
17
LIFT2 OUT
16
LIFT2 VD
15
GND2
14
OUT3
13
OUT4

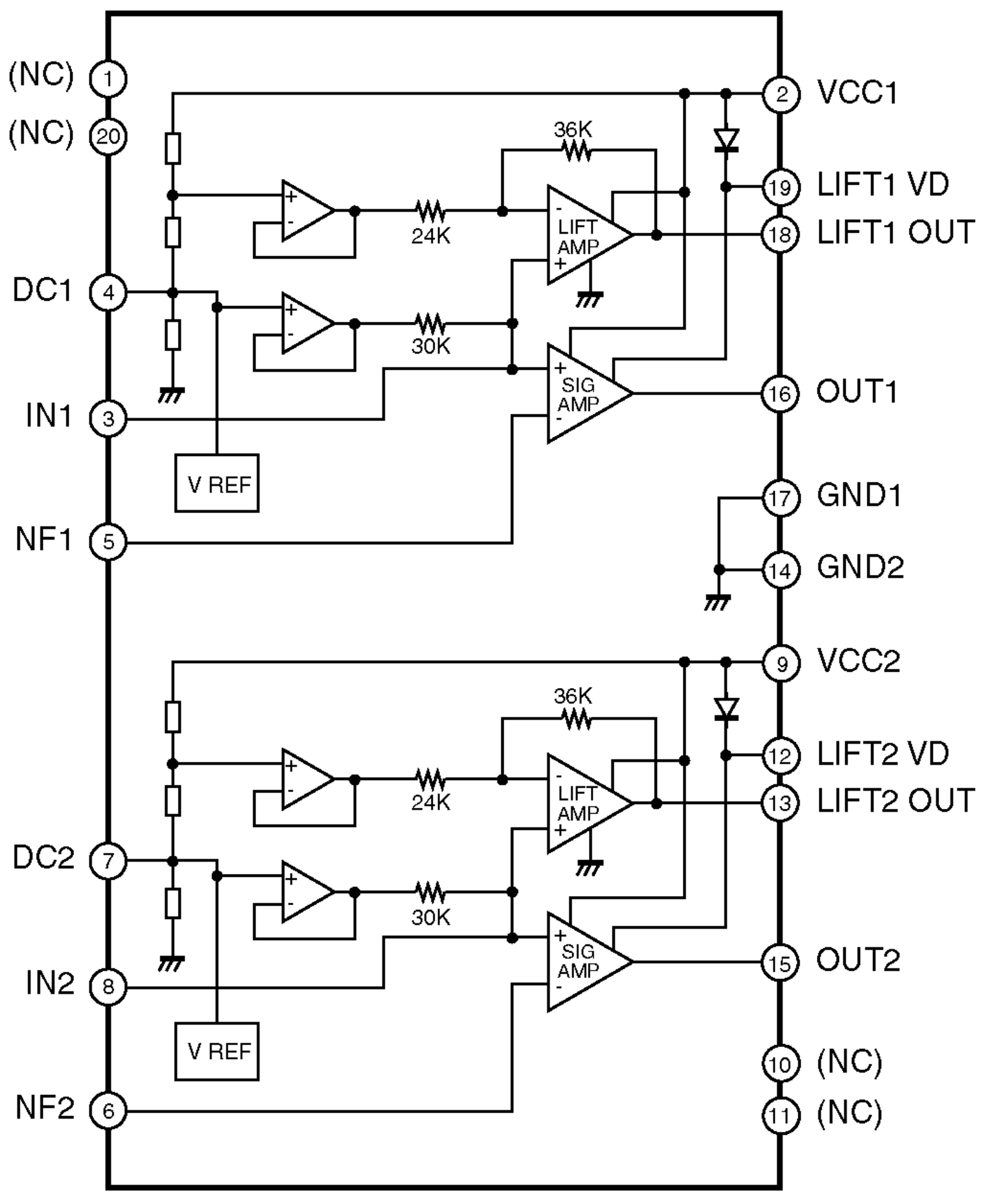
(NC) 1
(NC) 20
DC1 4
IN1 3
NF1 5
DC2 7
IN2 8
NF2 6
2 VCC1
19 LIFT1 VD
18 LIFT1 OUT
16 OUT1
17 GND1
14 GND2
9 VCC2
12 LIFT2 VD
13 LIFT2 OUT
15 OUT2
10 (NC)
11 (NC)
36K
24K
30K
LIFT AMP
SIG AMP
V REF
36K
24K
30K
LIFT AMP
SIG AMP
V REF

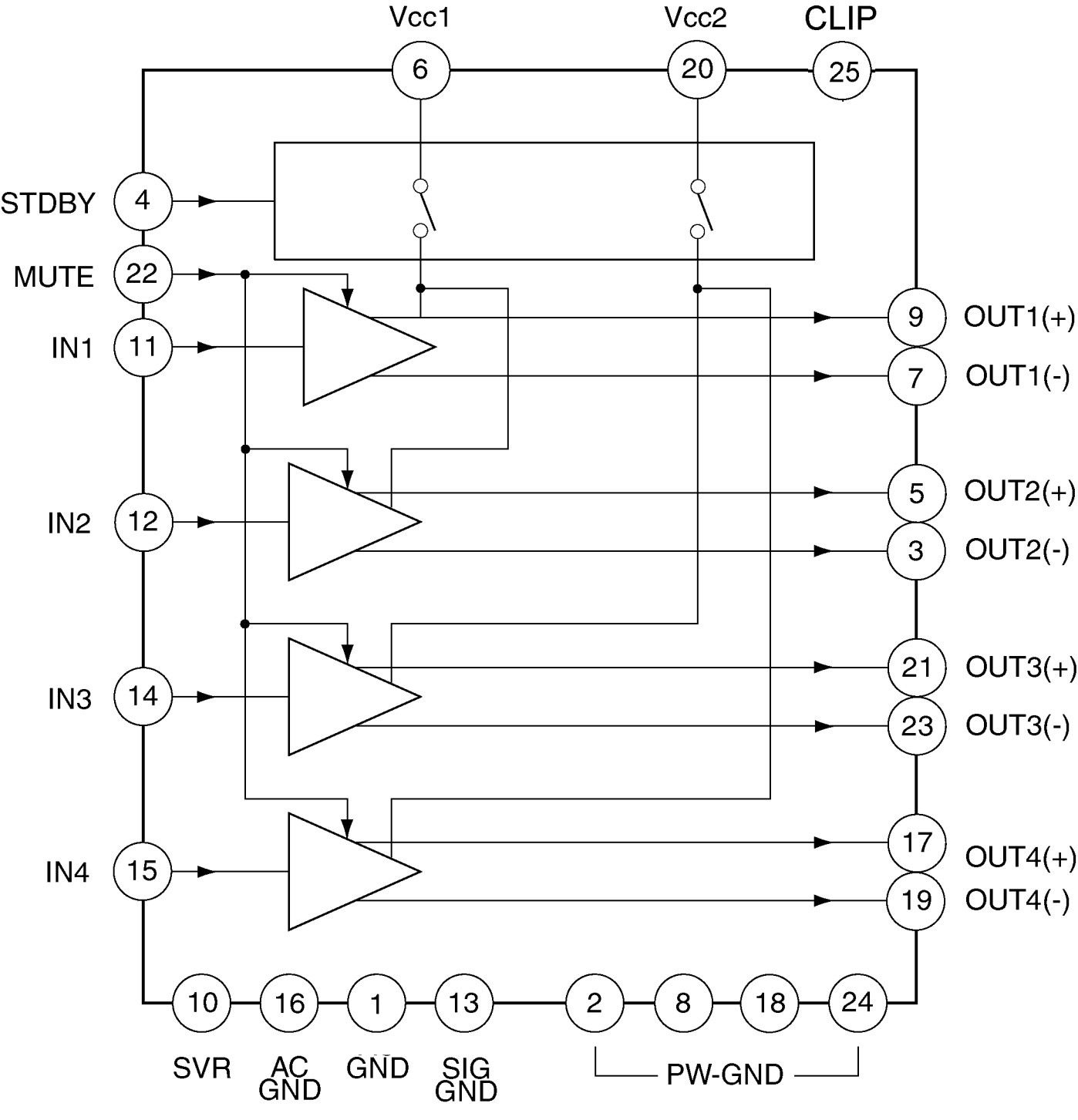
Vcc1
Vcc2
CLIP
6
20
25
STDBY
4
MUTE
22
IN1
11
IN2
12
IN3
14
IN4
15
9
OUT1(+)
7
OUT1(-)
5
OUT2(+)
3
OUT2(-)
21
OUT3(+)
23
OUT3(-)
17
OUT4(+)
19
OUT4(-)
10
16
1
13
2
8
18
24
SVR
AC GND
GND
SIG GND
PW-GND

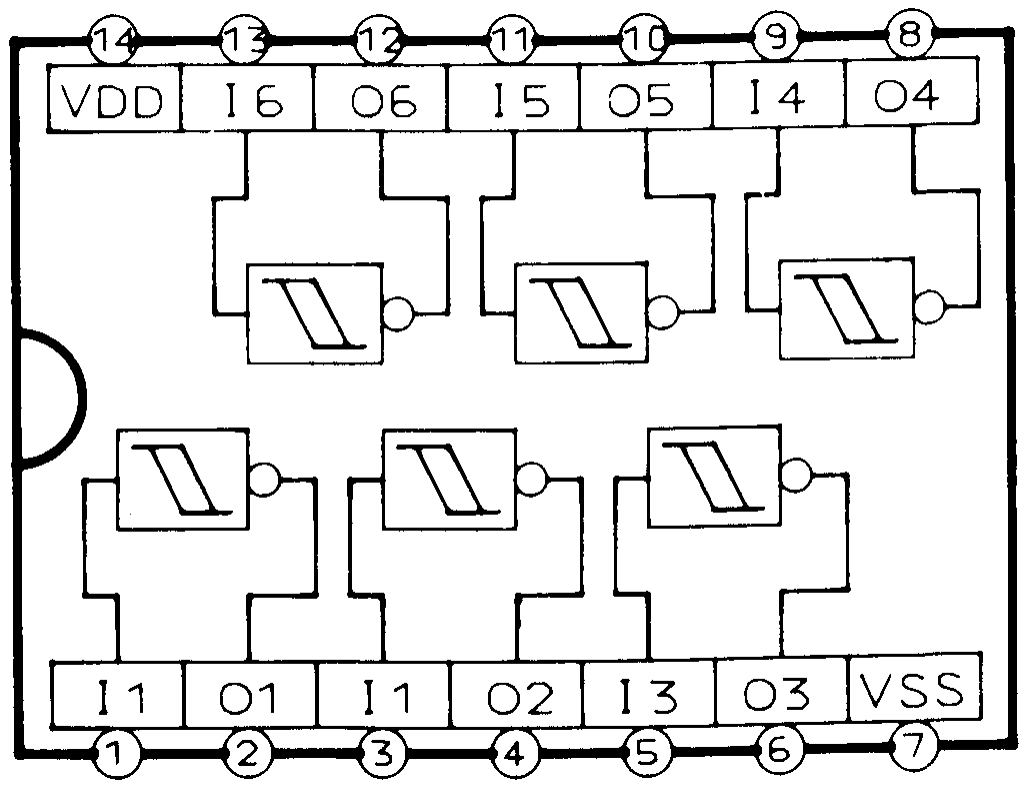
14
13
12
11
10
9
8
VDD
I6
O6
I5
O5
I4
O4
I1
O1
I1
O2
I3
O3
VSS
1
2
3
4
5
6
7

16.3. CD Servo Block

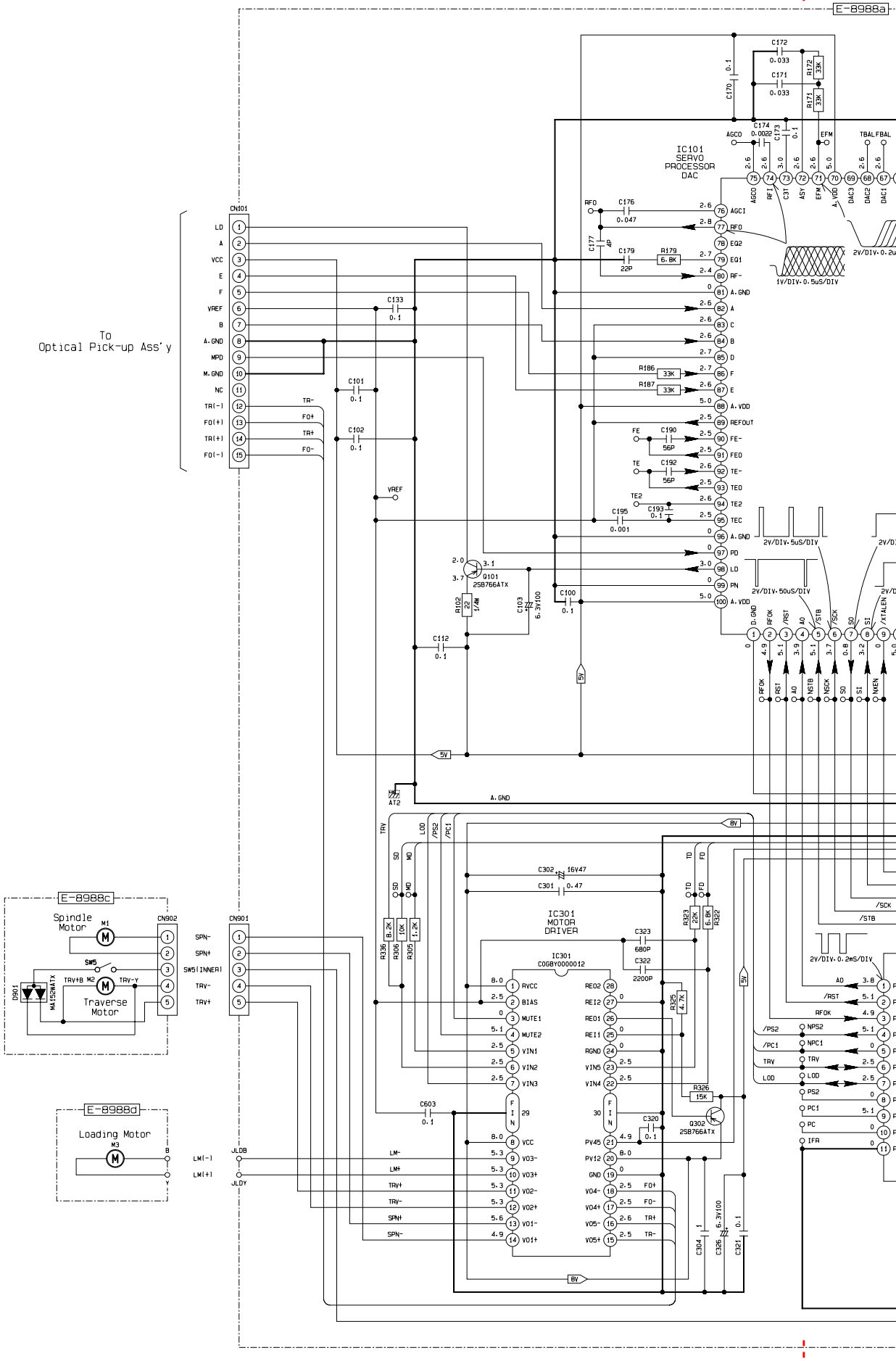

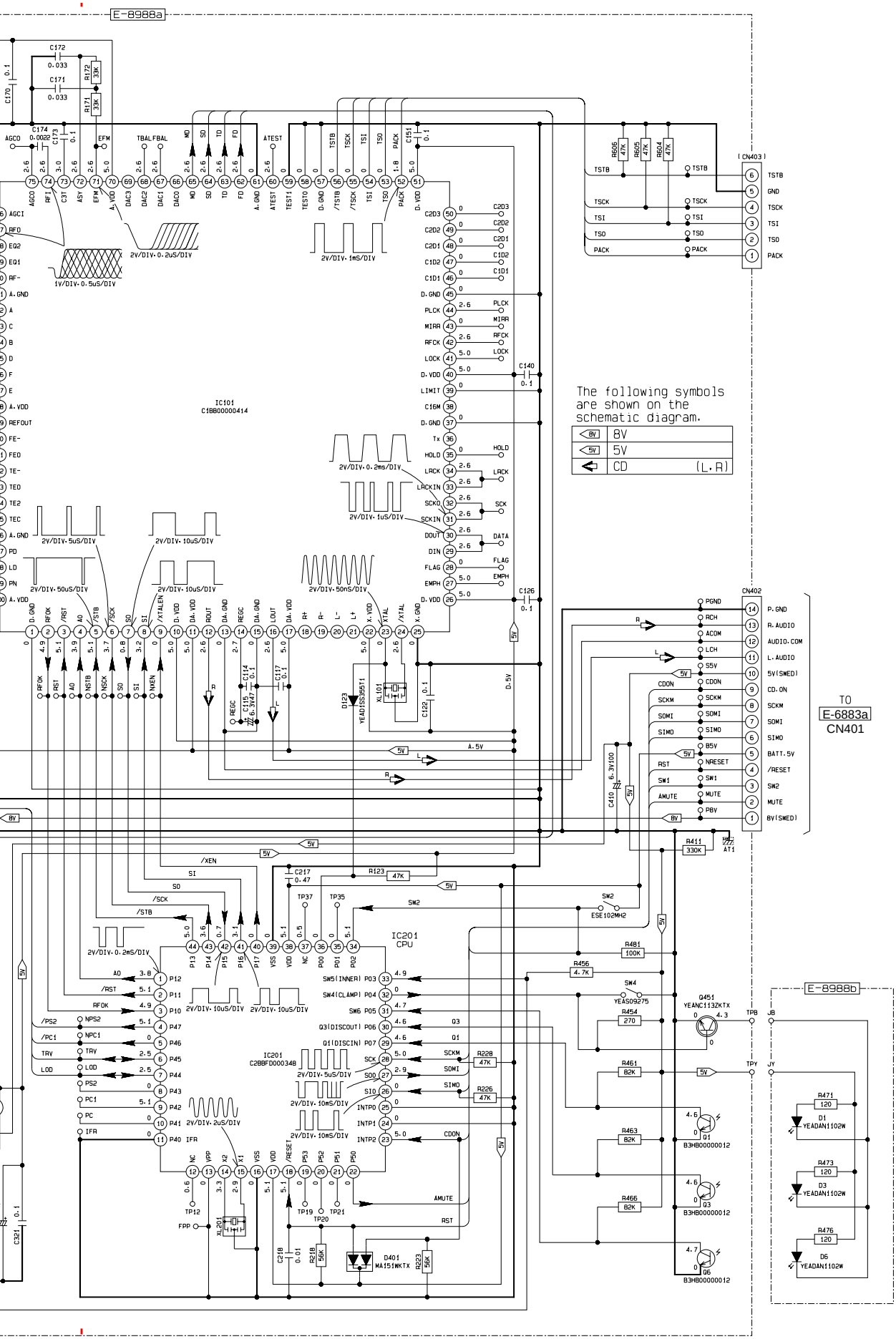
E-8988a
IC101
C1BB00000414
IC201
CPU
C2BBFD000348
CN403
CN402
TO
E-6883a
CN401
E-8988b
The following symbols
are shown on the
schematic diagram.
8V
5V
CD (L.R)

16.2. Display Block

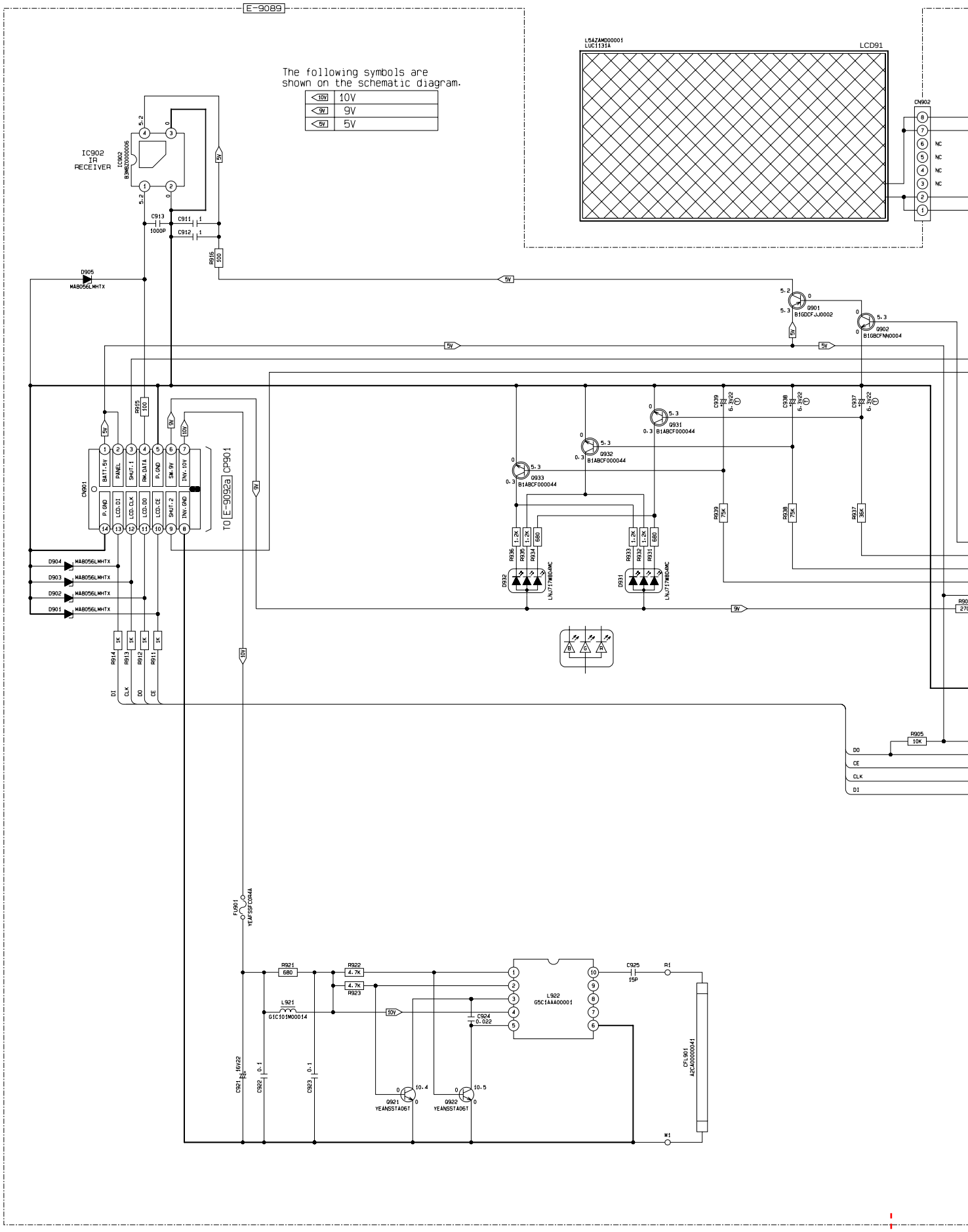

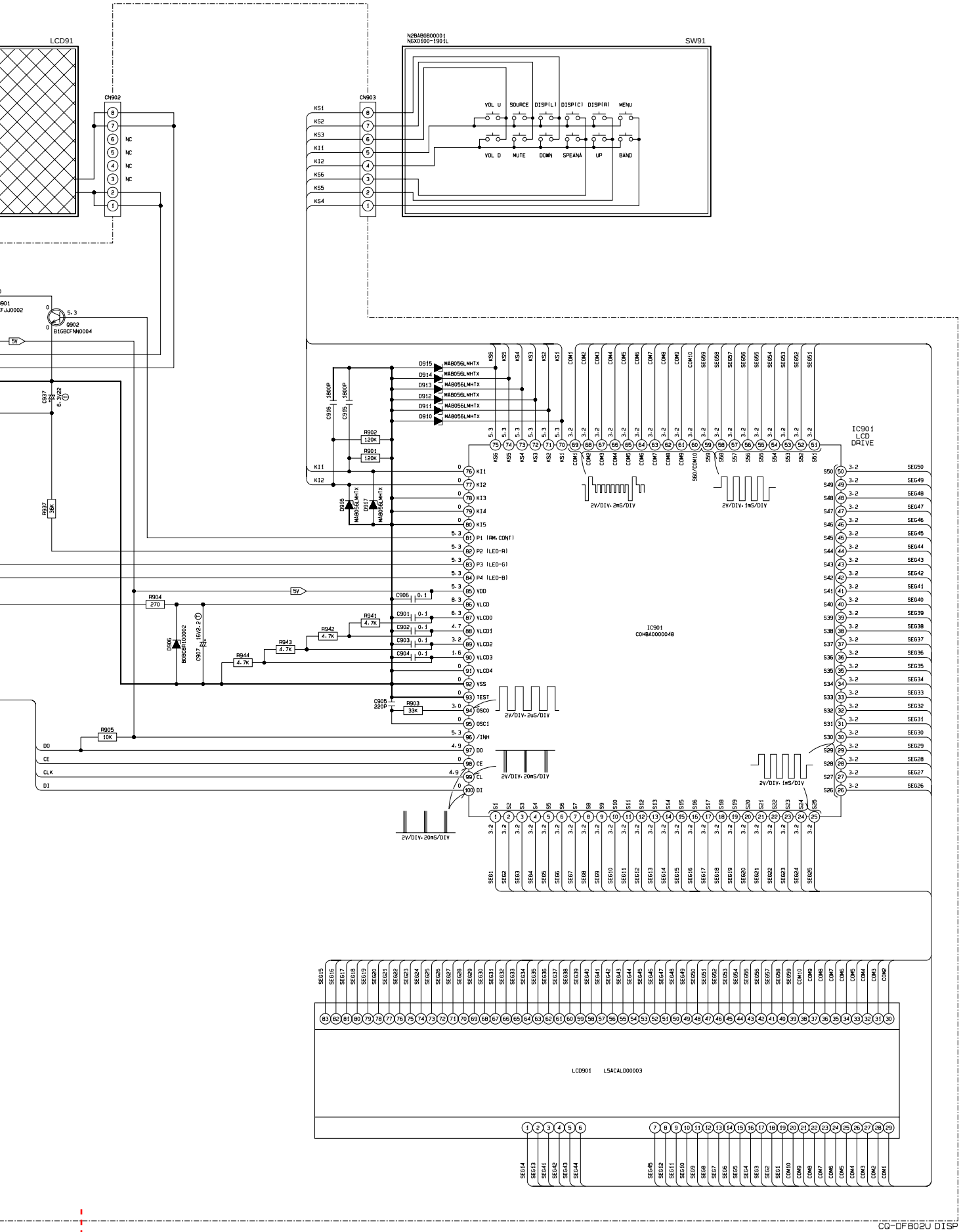
LCD91
CN902
CN903
SW91
N2BAB6B00001
N6X0100-1901L
VOL U
SOURCE
DISP(L)
DISP(C)
DISP(R)
MENU
VOL D
MUTE
DOWN
SPEANA
UP
BAND
IC901
LCD
DRIVE
IC901
C0HBA0000048
LCD901 L5ACALD00003
CQ-DF802U DISP

Printed in Japan (K)
2002.1
(Recycled Paper)

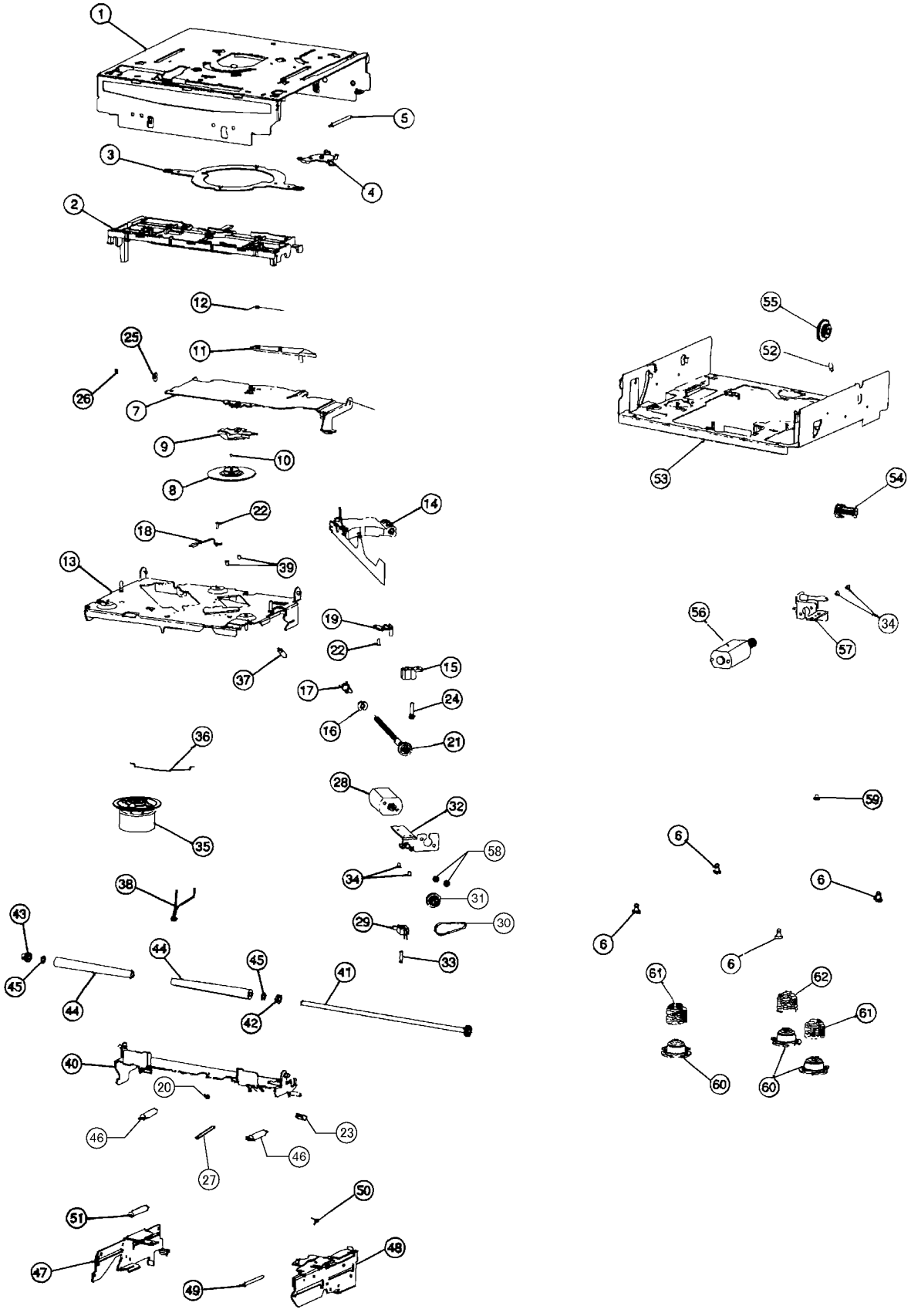
1
5
3
4
2
12
25
11
26
7
9
10
8
22
14
18
39
13
19
22
37
15
17
24
16
21
36
28
32
35
58
34
31
38
29
30
43
33
44
45
45
41
44
42
40
20
46
23
46
27
50
51
47
48
49
55
52
53
54
56
34
57
59
6
6
6
6
61
62
61
60
60

NCD8
'01.12

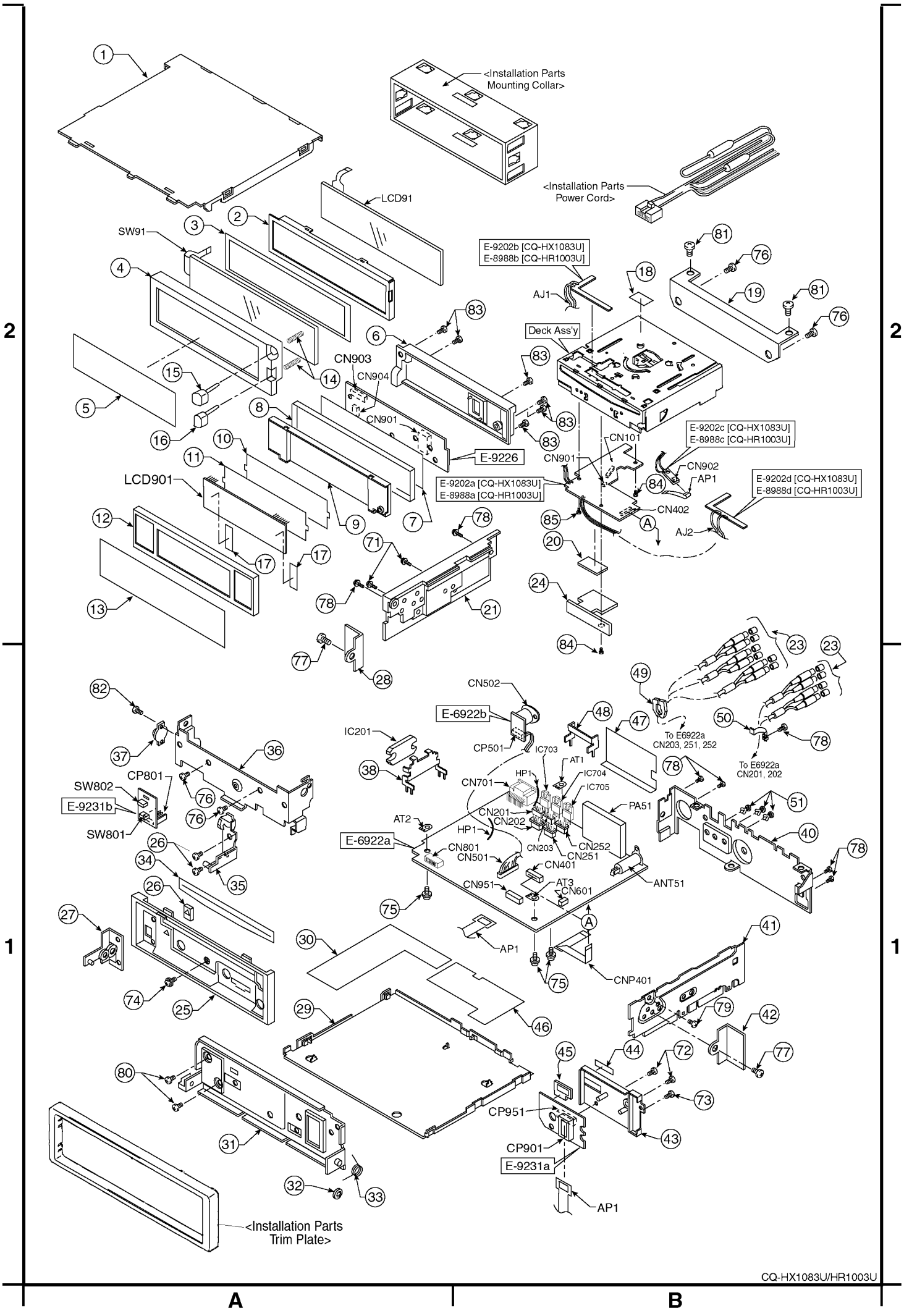
1
<Installation Parts Mounting Collar>
LCD91
<Installation Parts Power Cord>
SW91
2
3
4
E-9202b [CQ-HX1083U]
E-8988b [CQ-HR1003U]
AJ1
18
19
81
76
83
6
Deck Ass'y
CN903
CN904
15
14
5
8
CN901
16
10
11
E-9226
E-9202c [CQ-HX1083U]
E-8988c [CQ-HR1003U]
CN101
CN902
AP1
LCD901
E-9202a [CQ-HX1083U]
E-8988a [CQ-HR1003U]
84
E-9202d [CQ-HX1083U]
E-8988d [CQ-HR1003U]
CN402
12
9
7
78
85
A
AJ2
71
20
17
24
13
21
77
28
23
82
CN502
49
E-6922b
48
47
50
To E6922a
CN203, 251, 252
IC201
CP501
IC703
AT1
37
36
38
To E6922a
CN201, 202
CP801
SW802
CN701
HP1
IC704
IC705
E-9231b
PA51
51
SW801
AT2
CN201
CN202
HP1
40
E-6922a
CN801
CN203
CN252
CN251
CN501
CN401
26
34
35
CN951
AT3
CN601
ANT51
75
27
30
AP1
41
CNP401
74
25
29
46
79
42
45
44
72
77
80
CP951
73
31
43
CP901
E-9231a
32
33
AP1
<Installation Parts Trim Plate>

A B

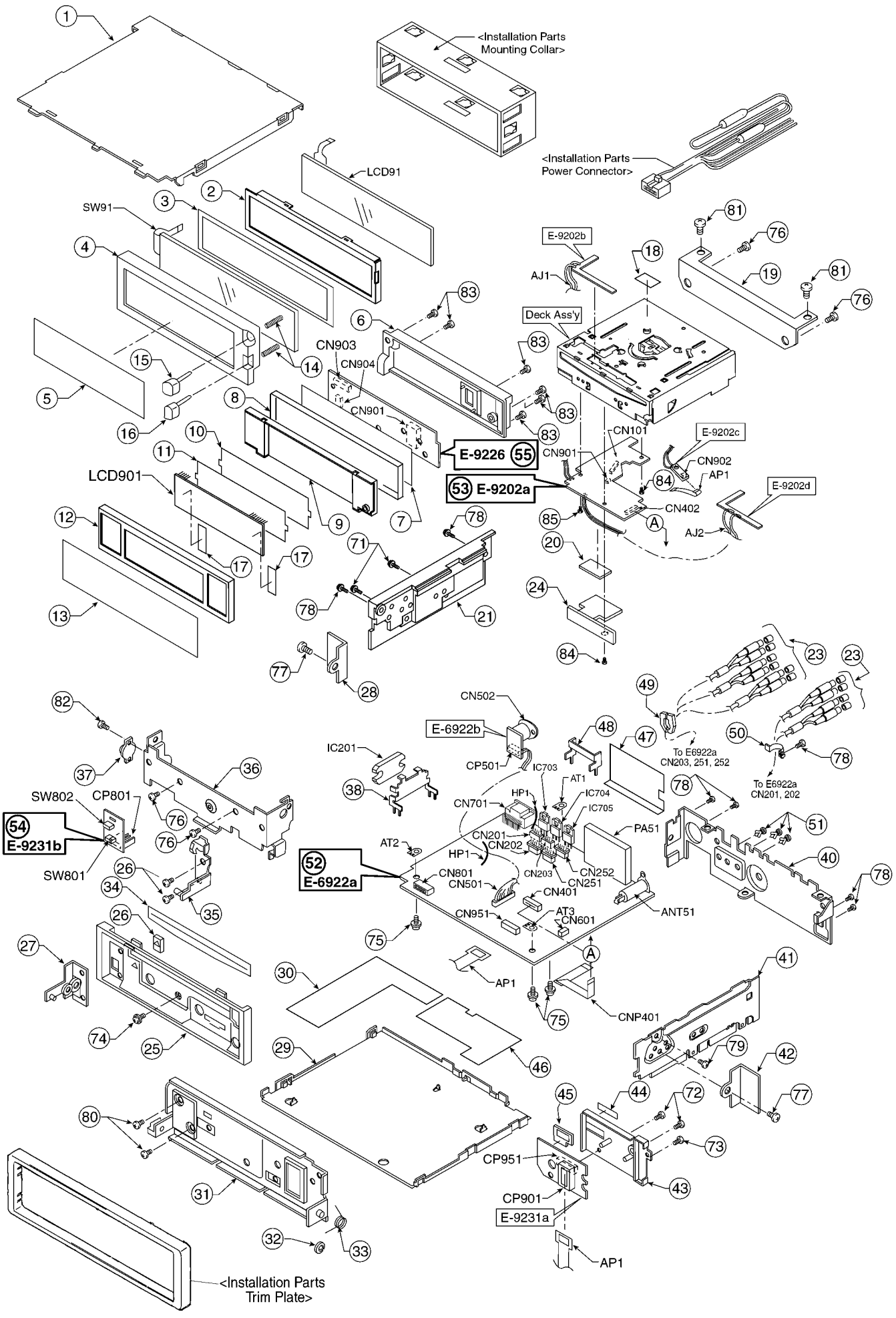

CQ-HX1083U

A B

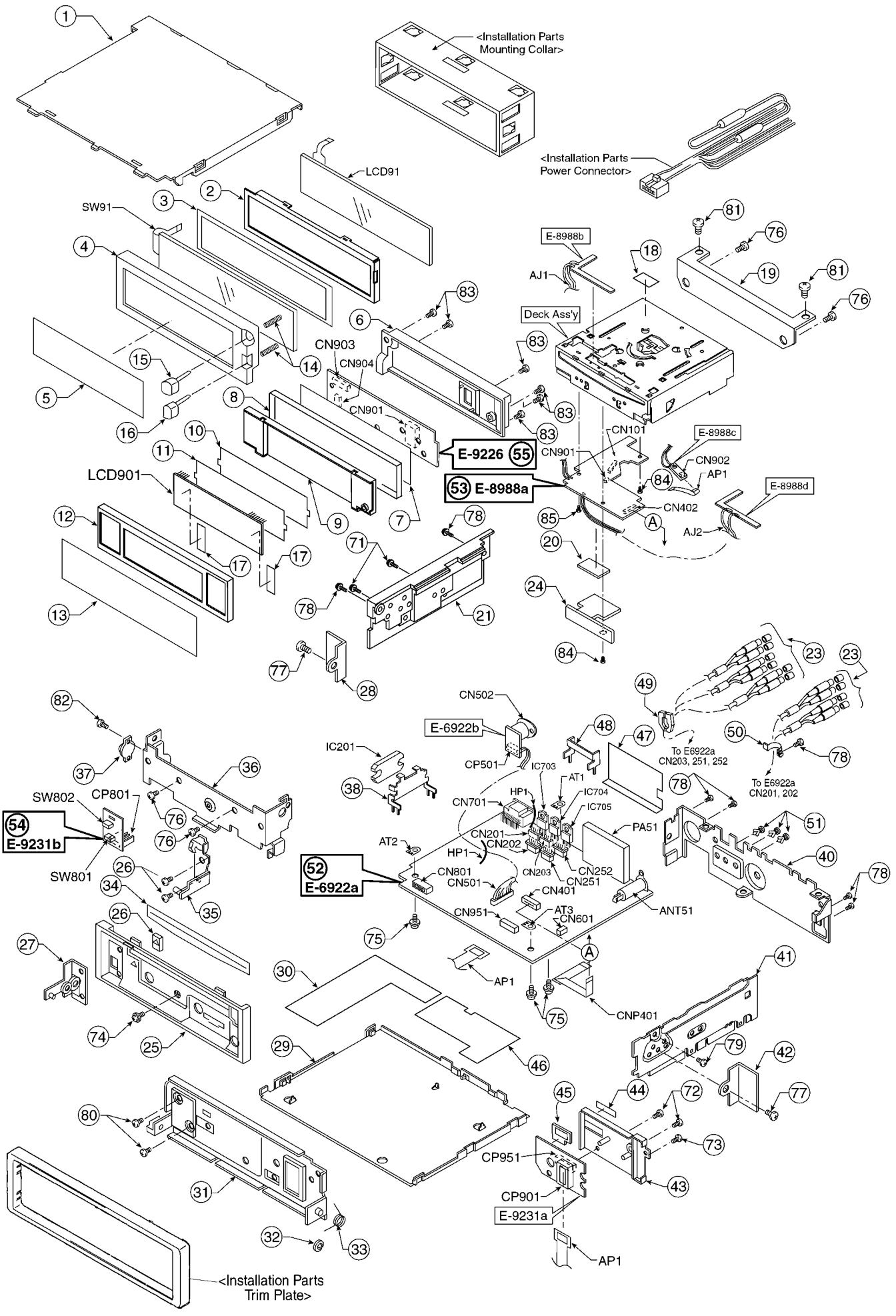

CQ-HR1003U

A B

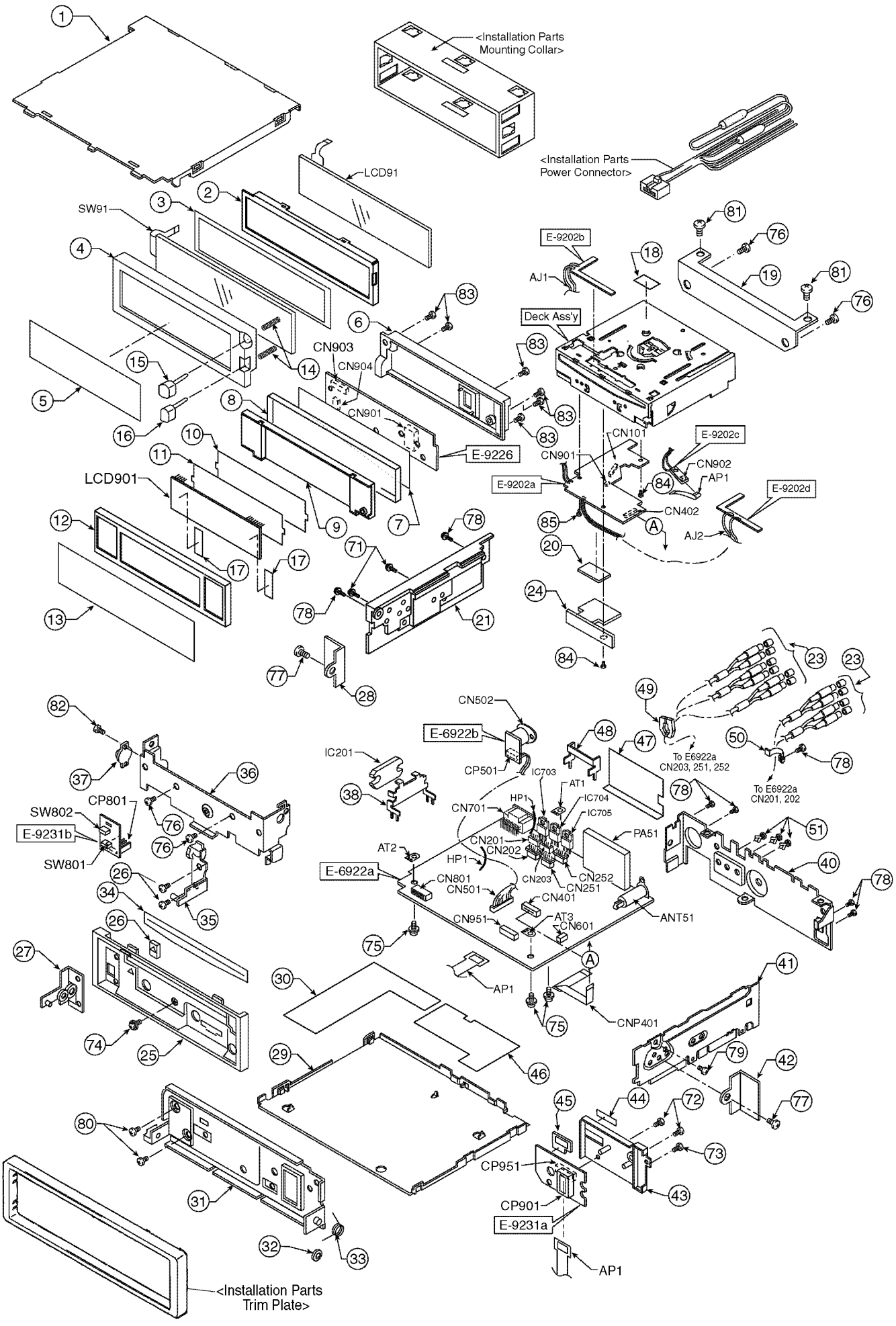

CQ-HX1083U

A B

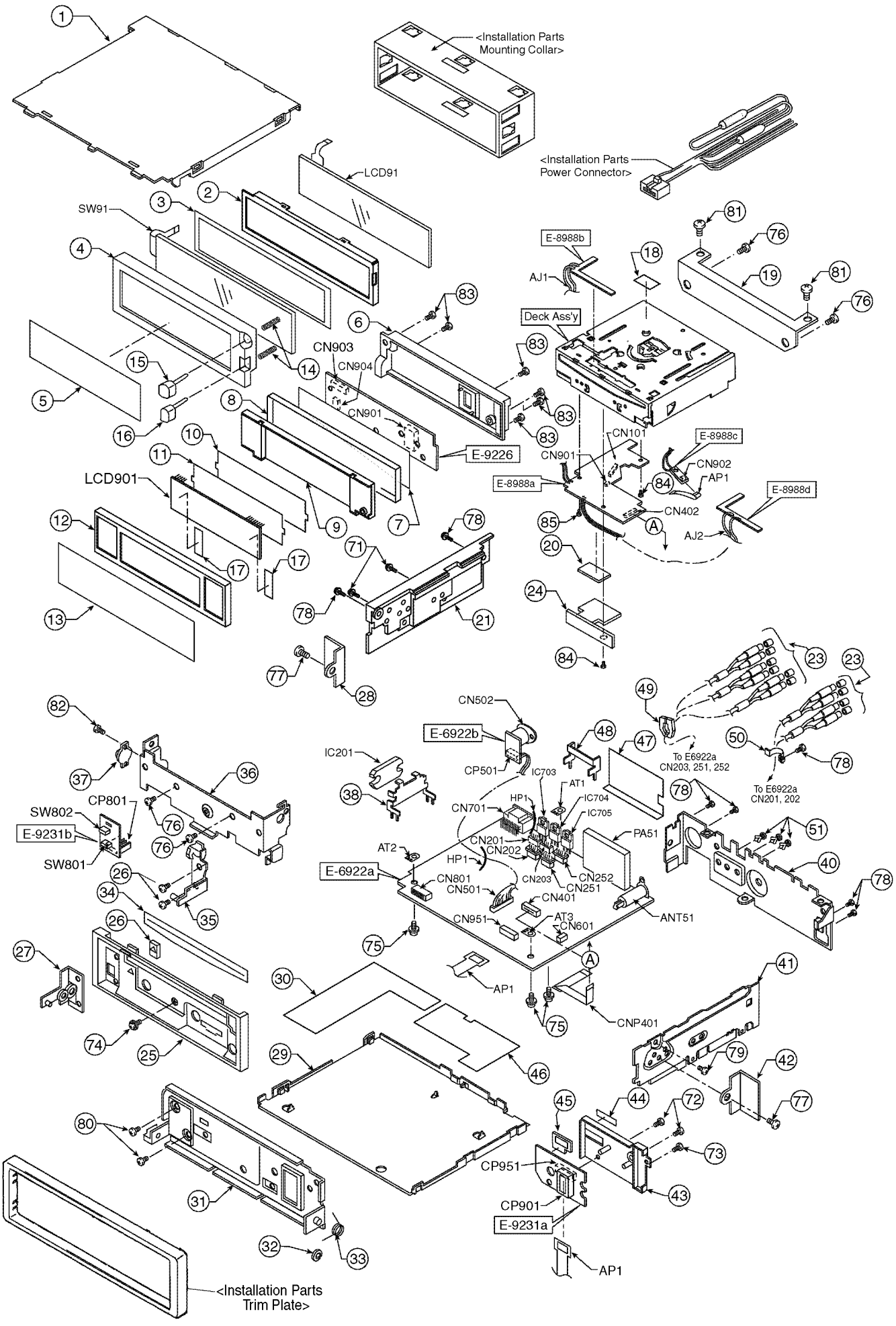

CQ-HR1003U

A B

CAUTION:

This product utilizes a laser diode with the unit turned "on", laser radiation is emitted from the pickup lens.

Laser radiation from the pickup lens is safety level, but be sure the followings:

1. Do not disassemble the optical pickup unit, since radiation from exposed laser diode is dangerous.
2. Do not adjust the variable resistor on the pickup unit. It was already adjusted.
3. Do not look at the focus lens using optical instruments.
4. Recommend not to look at pickup lens for a long time.

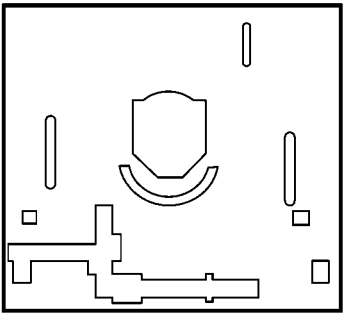

Deck Ass'y (Upper Side)

Caution

This Product utilizes a laser.

Use of controls or adjustments or performance of procedures other than those specified herein may result in hazardous radiation exposure.

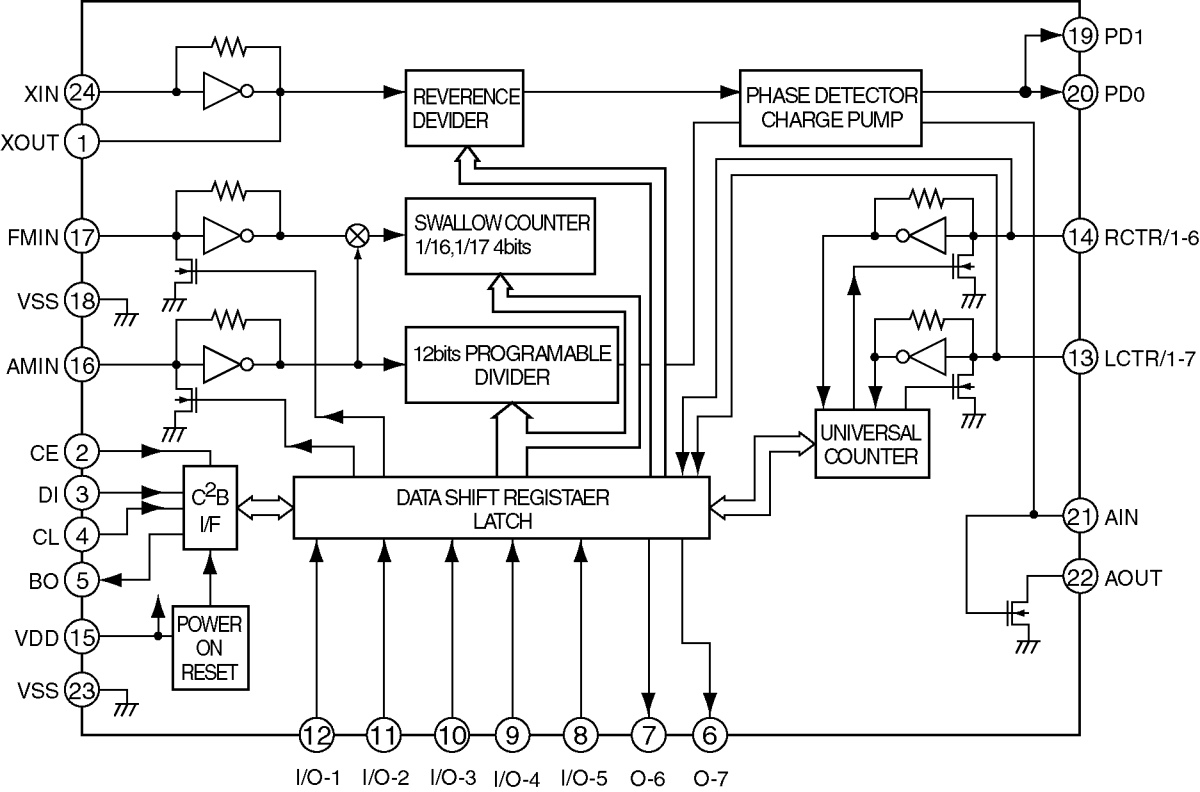
XIN 24
XOUT 1
FMIN 17
VSS 18
AMIN 16
CE 2
DI 3
CL 4
BO 5
VDD 15
VSS 23
REVERENCE DEVIDER
PHASE DETECTOR CHARGE PUMP
SWALLOW COUNTER 1/16,1/17 4bits
12bits PROGRAMABLE DIVIDER
UNIVERSAL COUNTER
C2B I/F
DATA SHIFT REGISTAER LATCH
POWER ON RESET
19 PD1
20 PD0
14 RCTR/1-6
13 LCTR/1-7
21 AIN
22 AOUT
12 I/O-1
11 I/O-2
10 I/O-3
9 I/O-4
8 I/O-5
7 O-6
6 O-7

16 SCHEMATIC DIAGRAM

16.1. Main Block

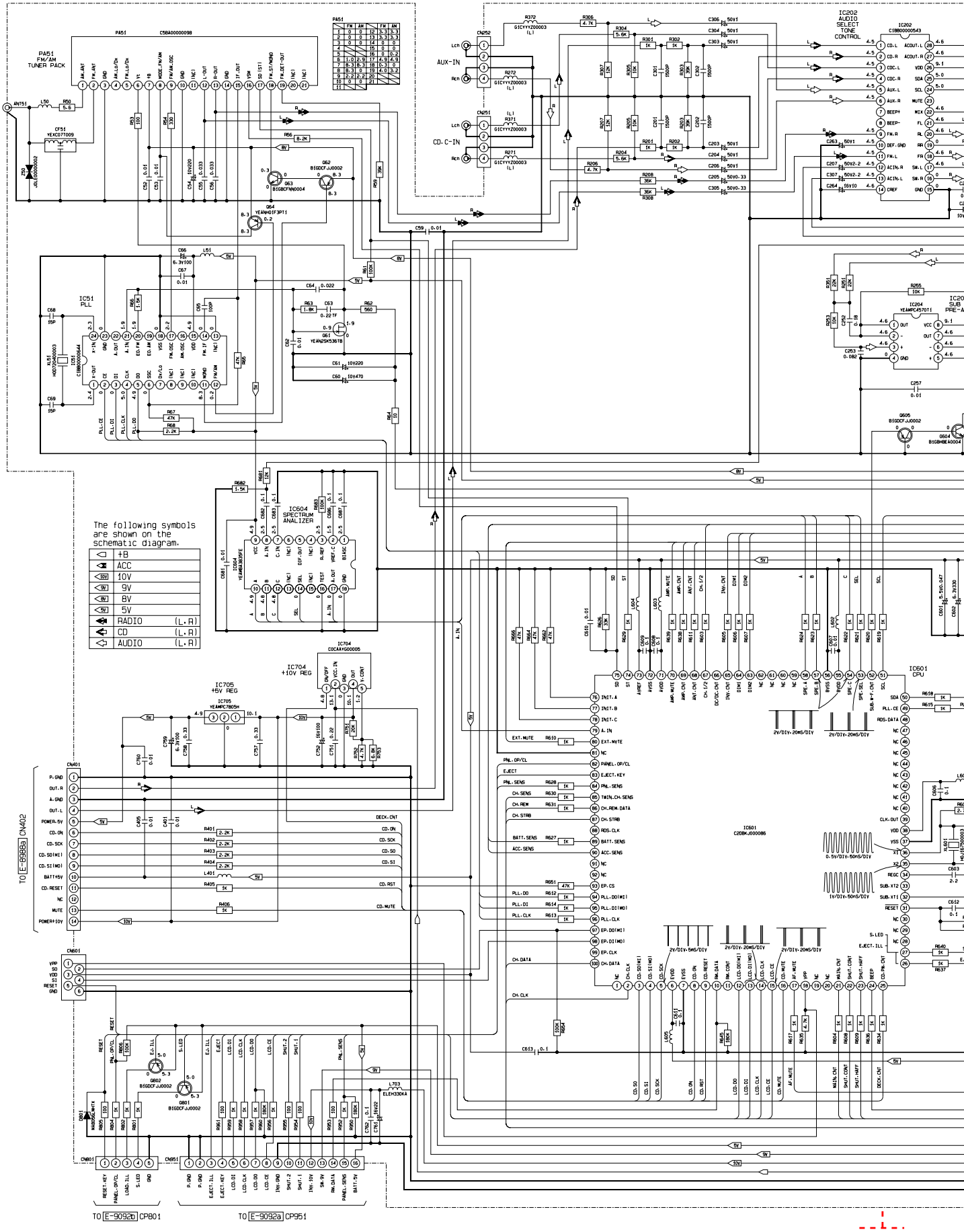

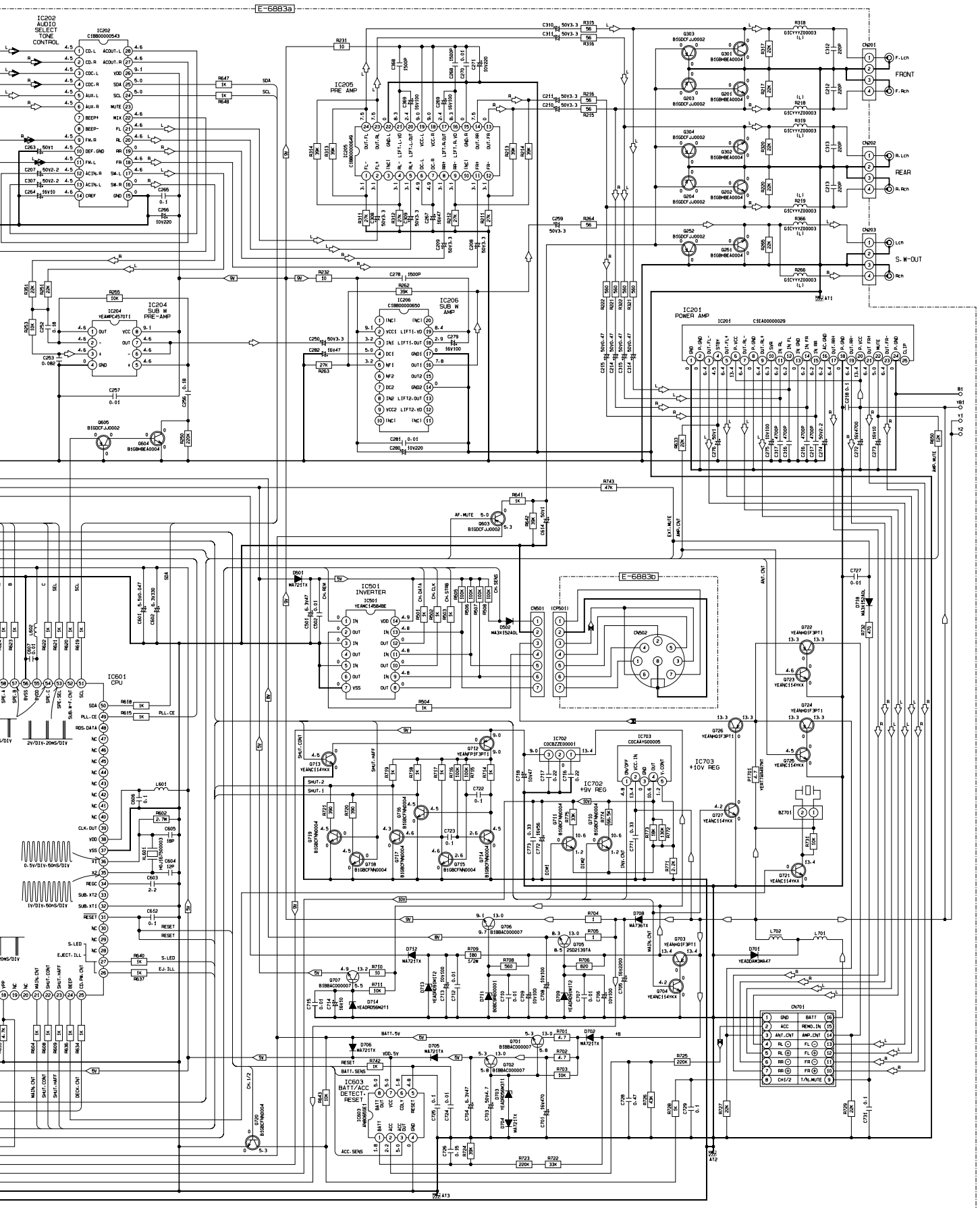
E-6883a
IC202
AUDIO
SELECT
TONE
CONTROL
IC205
PRE AMP
IC204
SUB W
PRE-AMP
IC206
SUB W
AMP
IC201
POWER AMP
FRONT
REAR
S. W-OUT
E-6883b
IC501
INVERTER
IC601
CPU
IC702
+9V REG
IC703
+10V REG
IC603
BATT/ACC
DETECT.
RESET
CN701
CQ-DF802U
MAIN

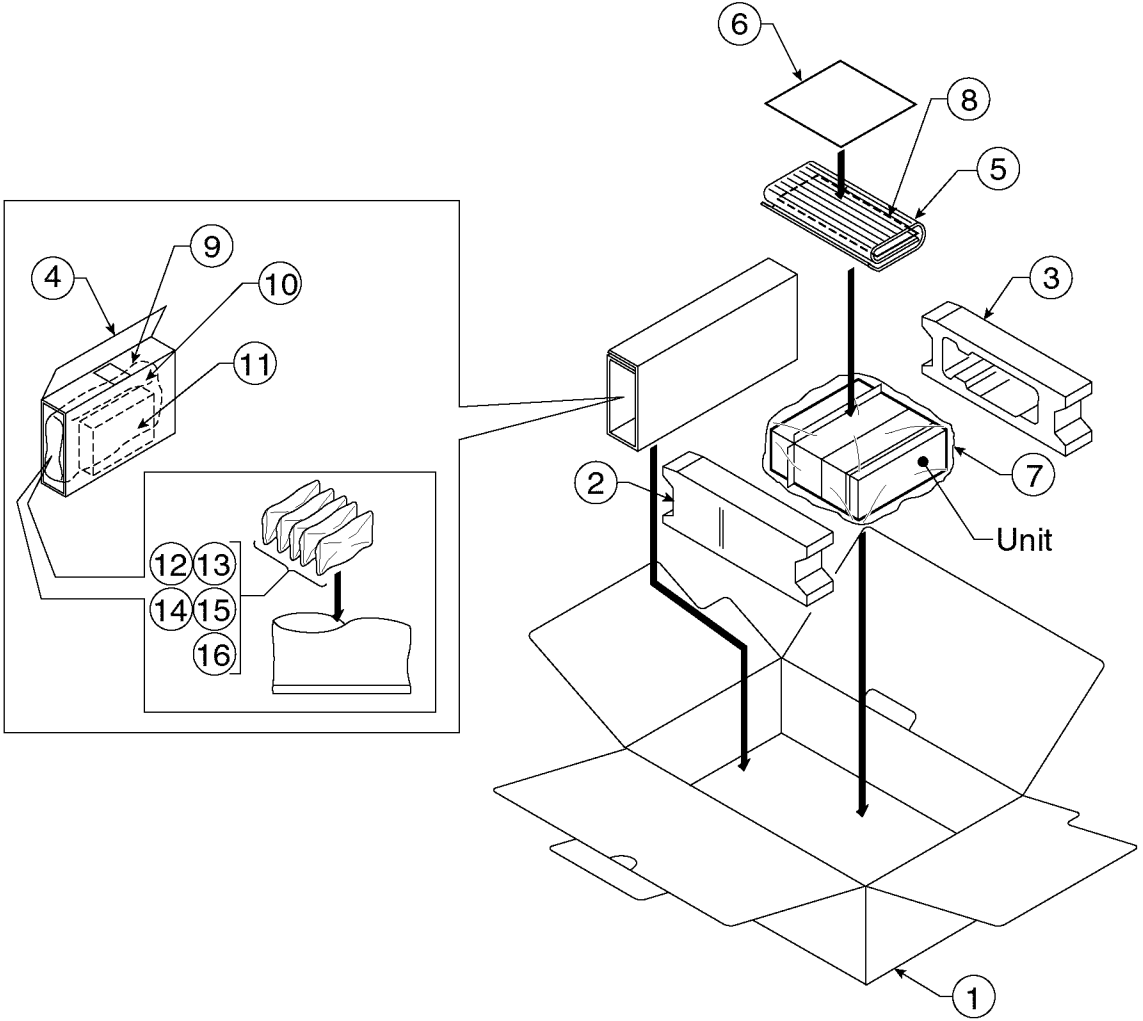
6
8
5
3
4
9
10
11
7
Unit
2
12
13
14
15
16
1

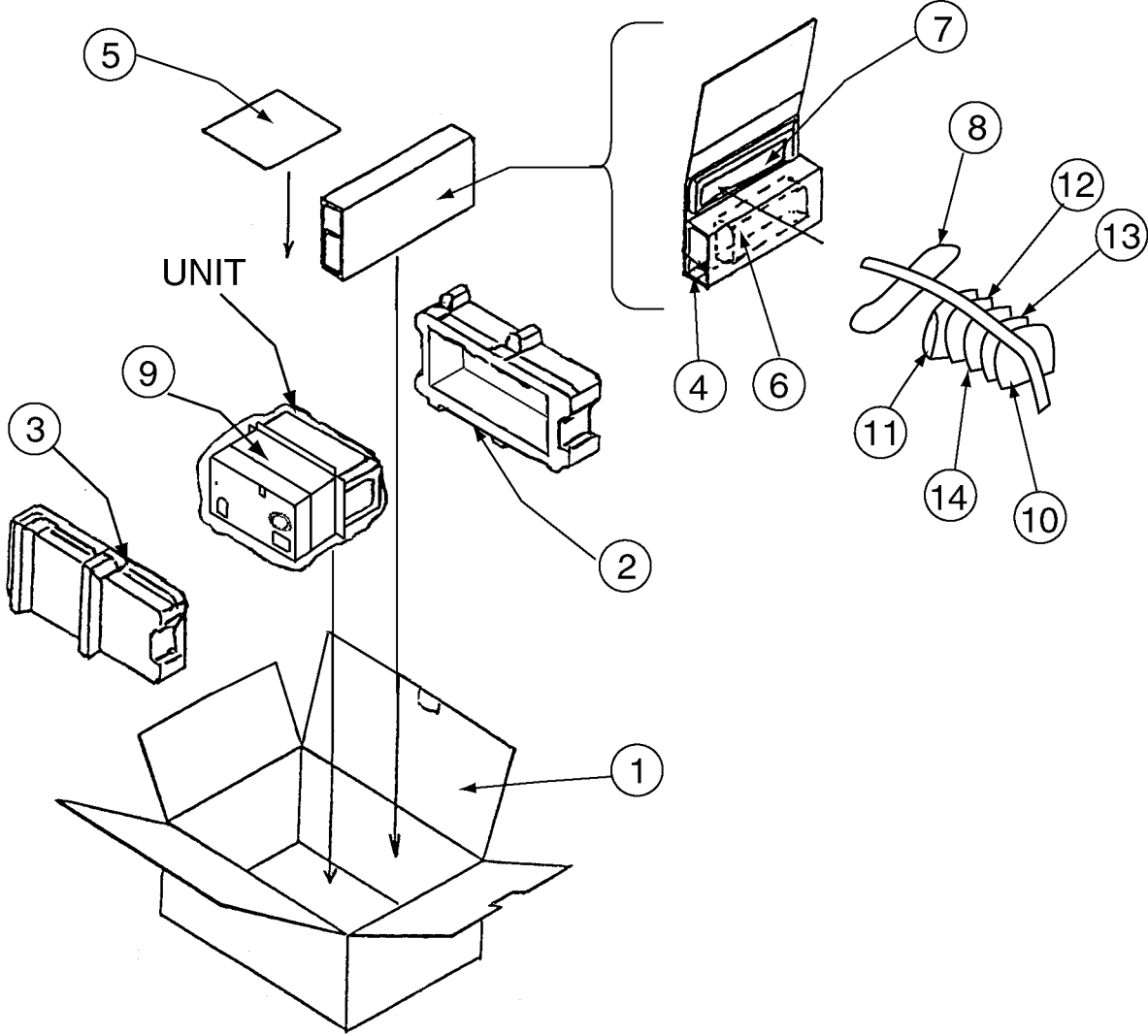
5
7
8
12
13
UNIT
9
3
4
6
11
14
10
2
1

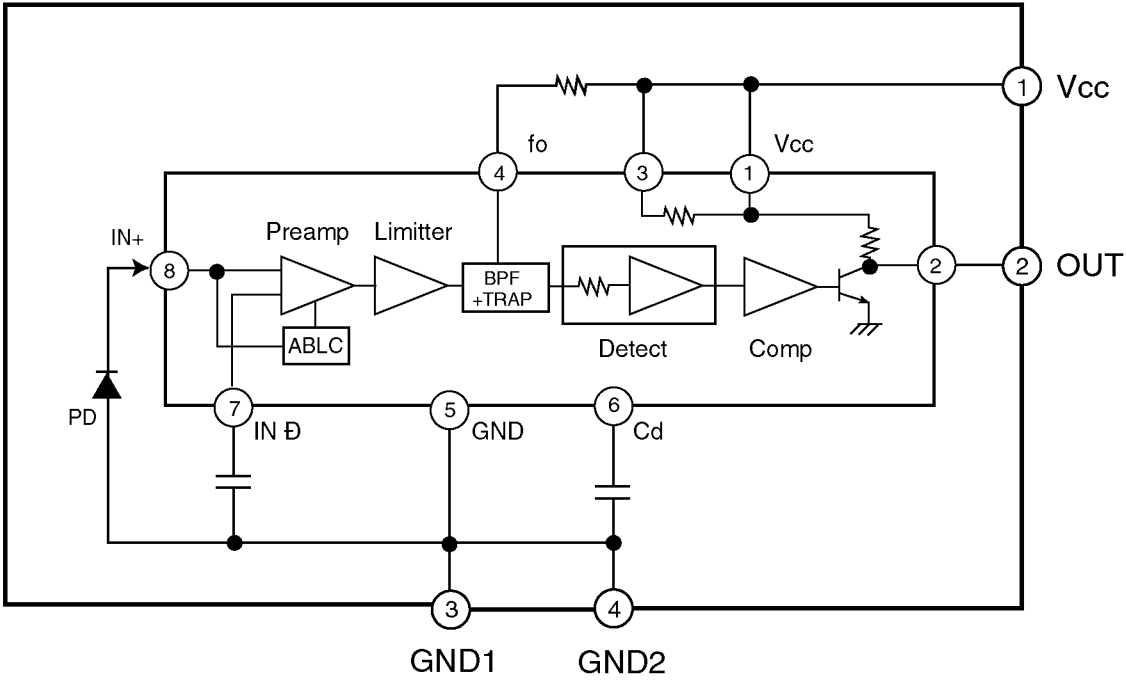
Vcc
1
fo
Vcc
4
3
1
IN+
8
Preamp
Limitter
BPF
+TRAP
2
2
OUT
ABLC
Detect
Comp
PD
7
IN Đ
5
GND
6
Cd
3
4
GND1
GND2

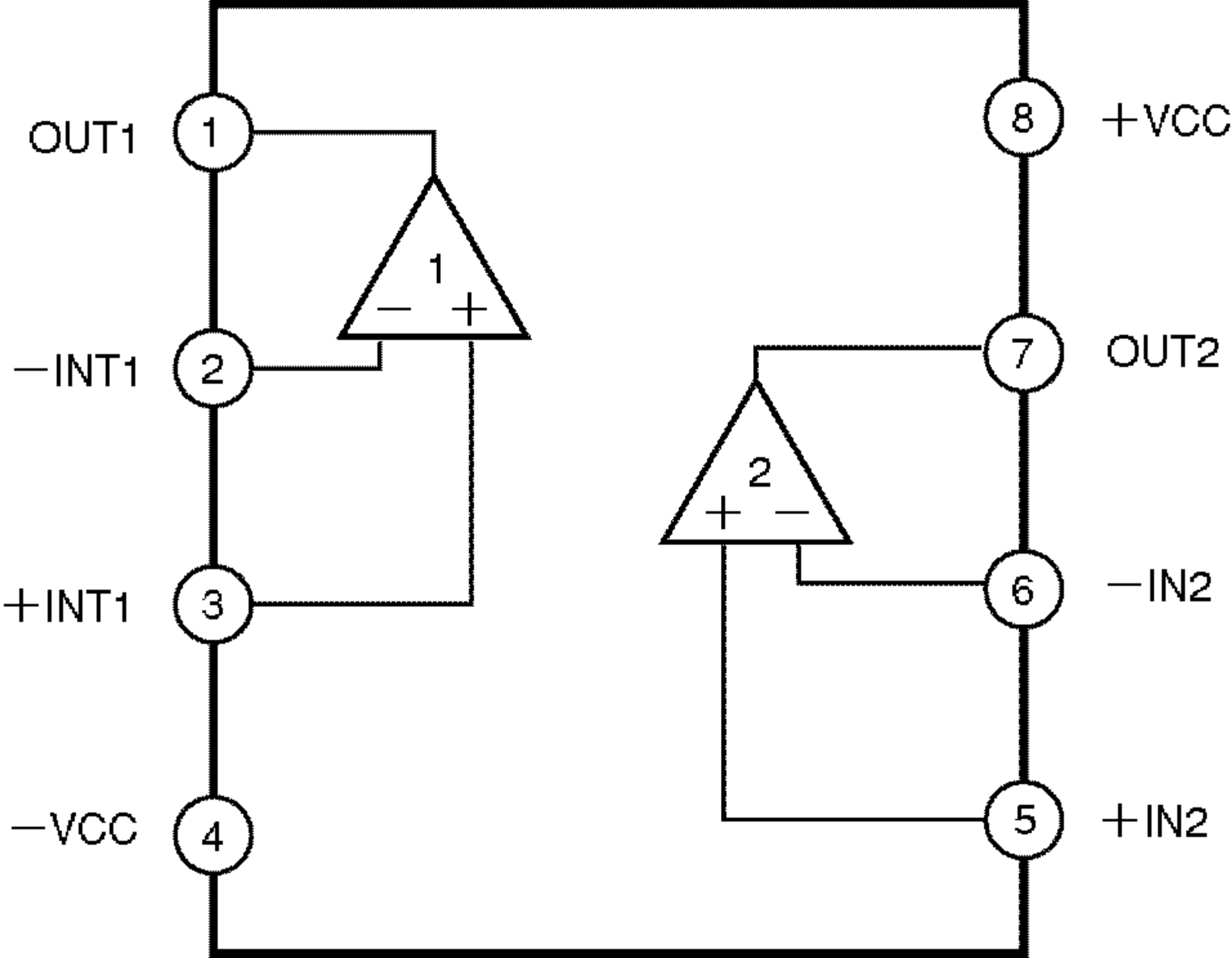
OUT1
1
−INT1
2
+INT1
3
−VCC
4
8
+VCC
7
OUT2
6
−IN2
5
+IN2
1
2

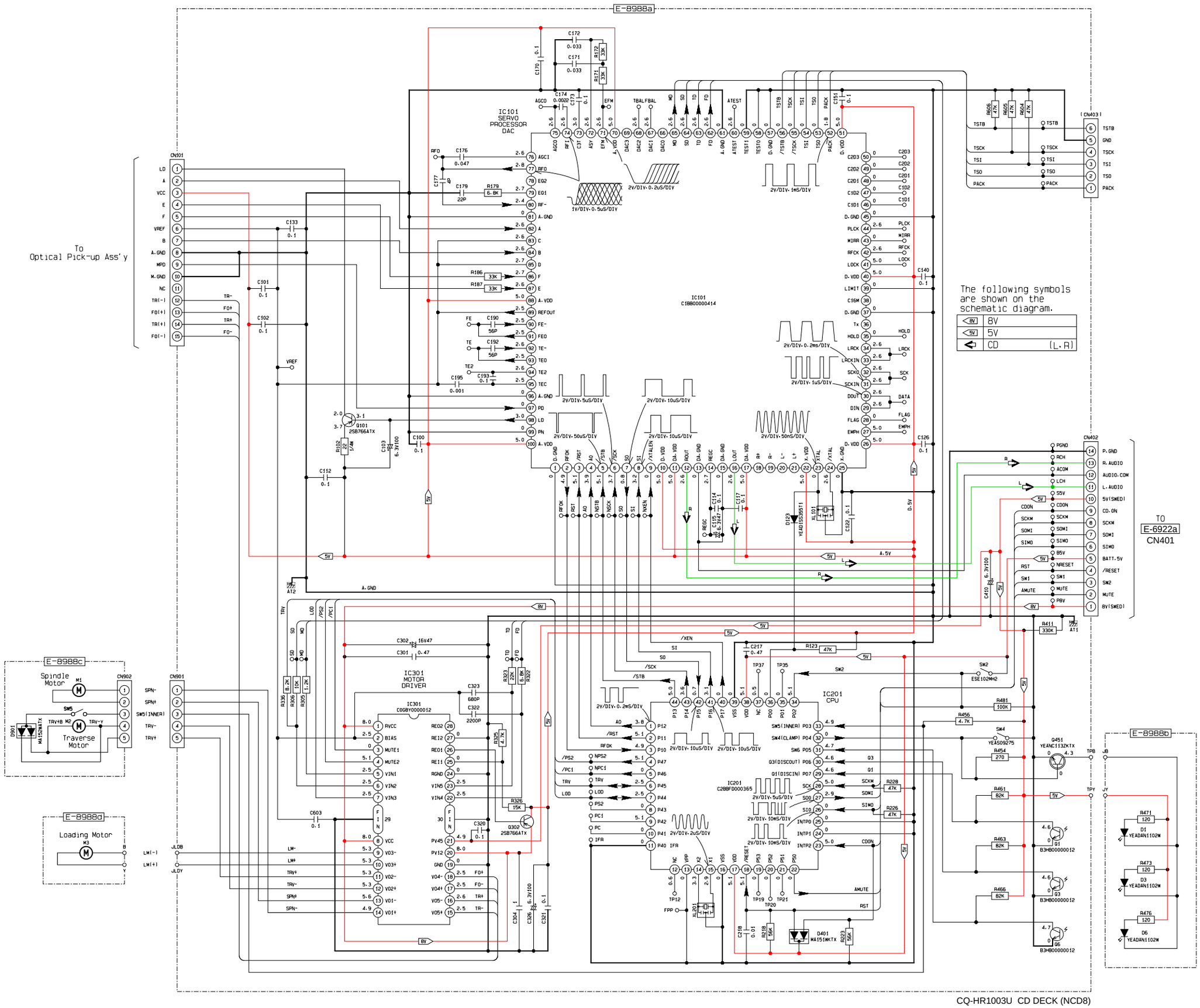
E-8988a
IC101
SERVO
PROCESSOR
DAC
IC101
C1BB00000414
To
Optical Pick-up Ass'y
CN101
CN403
CN402
TO
E-6922a
CN401
The following symbols
are shown on the
schematic diagram.
8V
5V
CD (L.R)
E-8988c
Spindle
Motor
Traverse
Motor
CN902
CN901
IC301
MOTOR
DRIVER
IC301
C0GBY0000012
E-8988d
Loading Motor
IC201
CPU
IC201
C2BBF0000365
E-8988b
CQ-HR1003U CD DECK (NCD8)

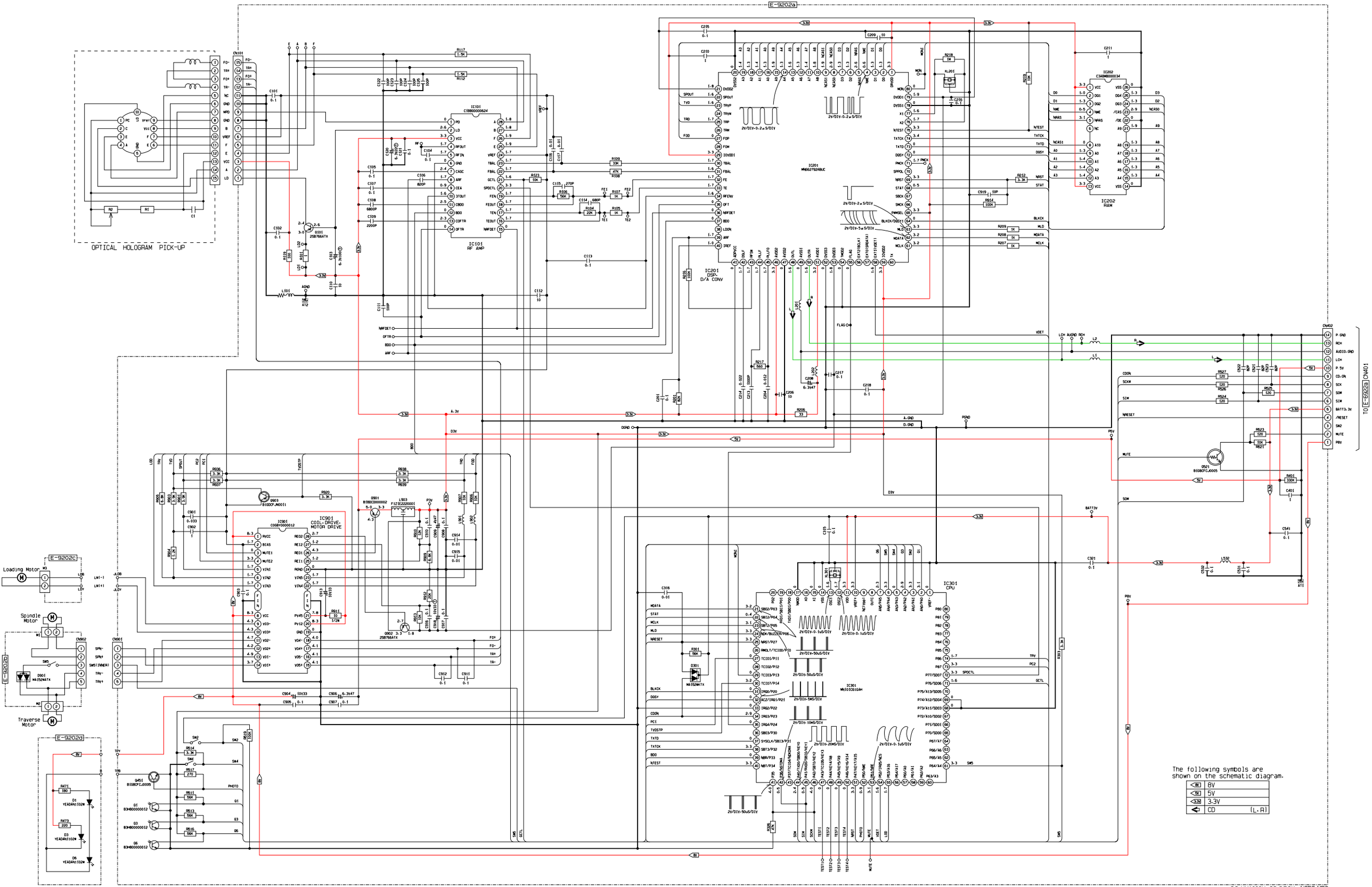
E-9202a
OPTICAL HOLOGRAM PICK-UP
IC101
RF AMP
IC201
DSP, D/A CONV
IC202
RAM
IC301
CPU
IC901
COIL-DRIVE-MOTOR DRIVE
Loading Motor
Spindle Motor
Traverse Motor
E-9202c
E-9202b
E-9202d
CN402
TO E-6922a CM01
The following symbols are shown on the schematic diagram.
8V
5V
3.3V
CD (L,R)

20.4. CD Servo Block [CQ-HX1083U]

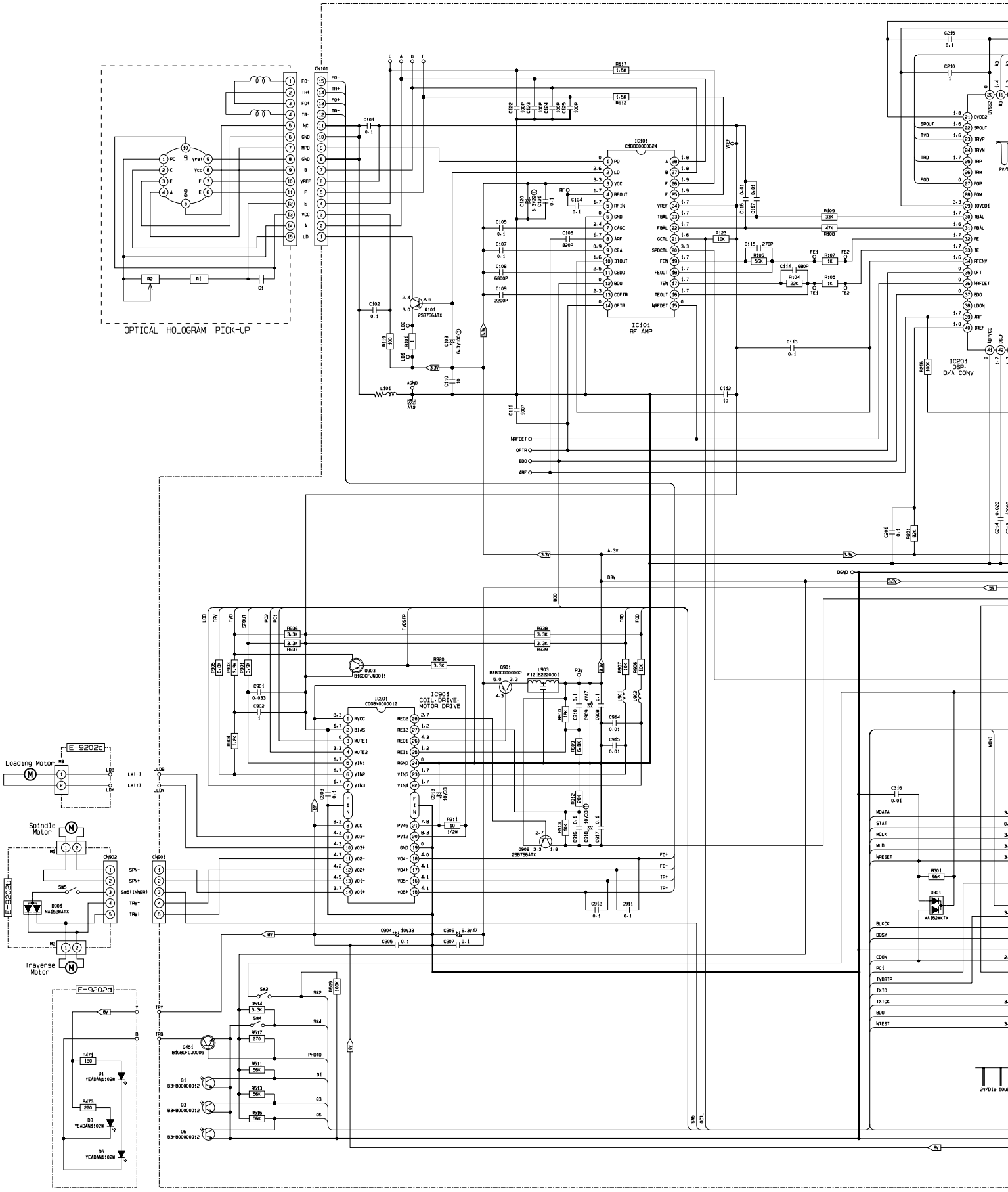

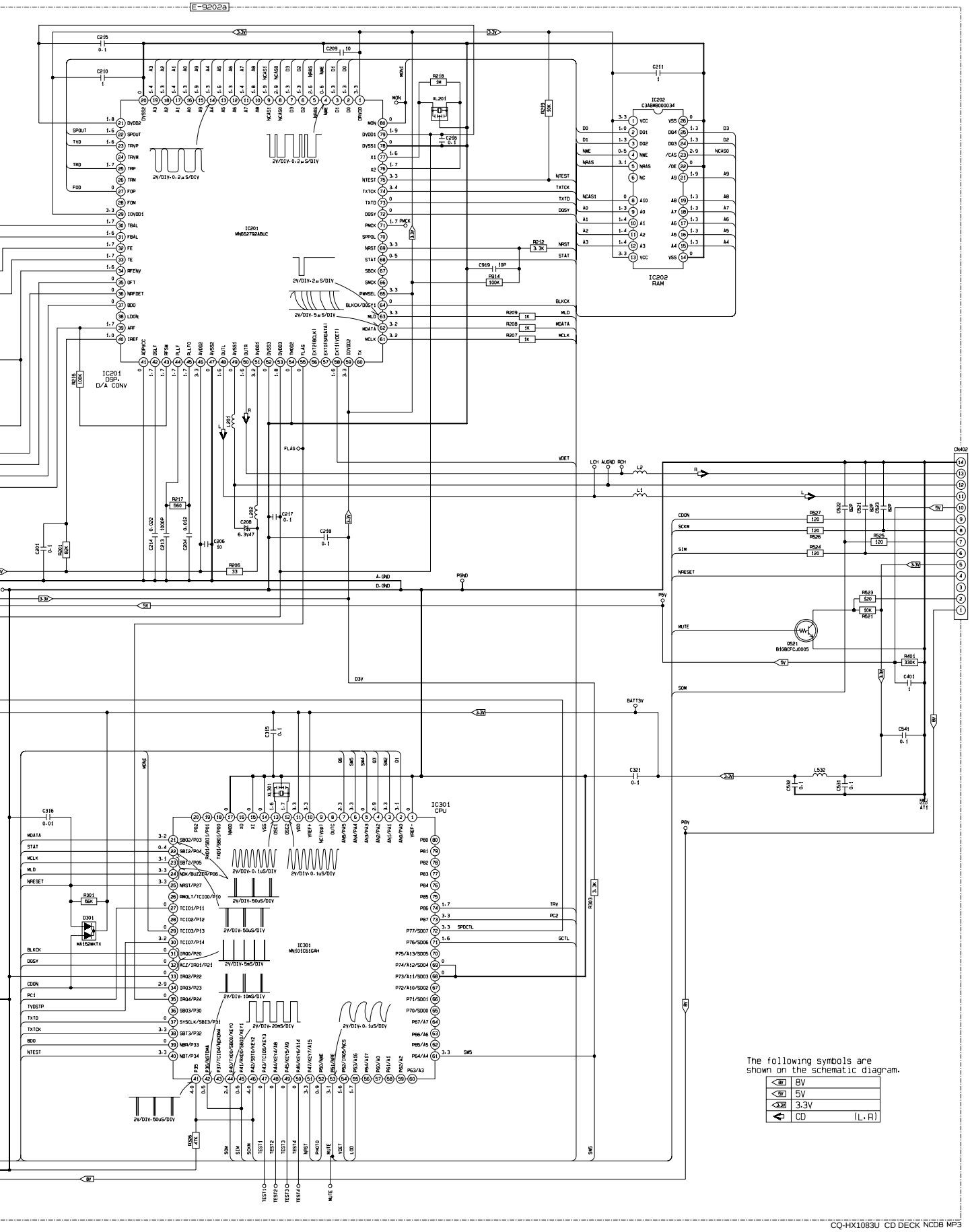
E-9202a
IC201
MN662792ABUC
IC201
DSP,
D/A CONV
IC202
C3AB00000034
IC202
RAM
IC301
CPU
IC301
MN101C61GAH
CN402
TO(E-5922a) CN401
The following symbols are
shown on the schematic diagram.
8V
5V
3.3V
CD (L,R)

20.5. CD Servo Block [CQ-HR1003U]

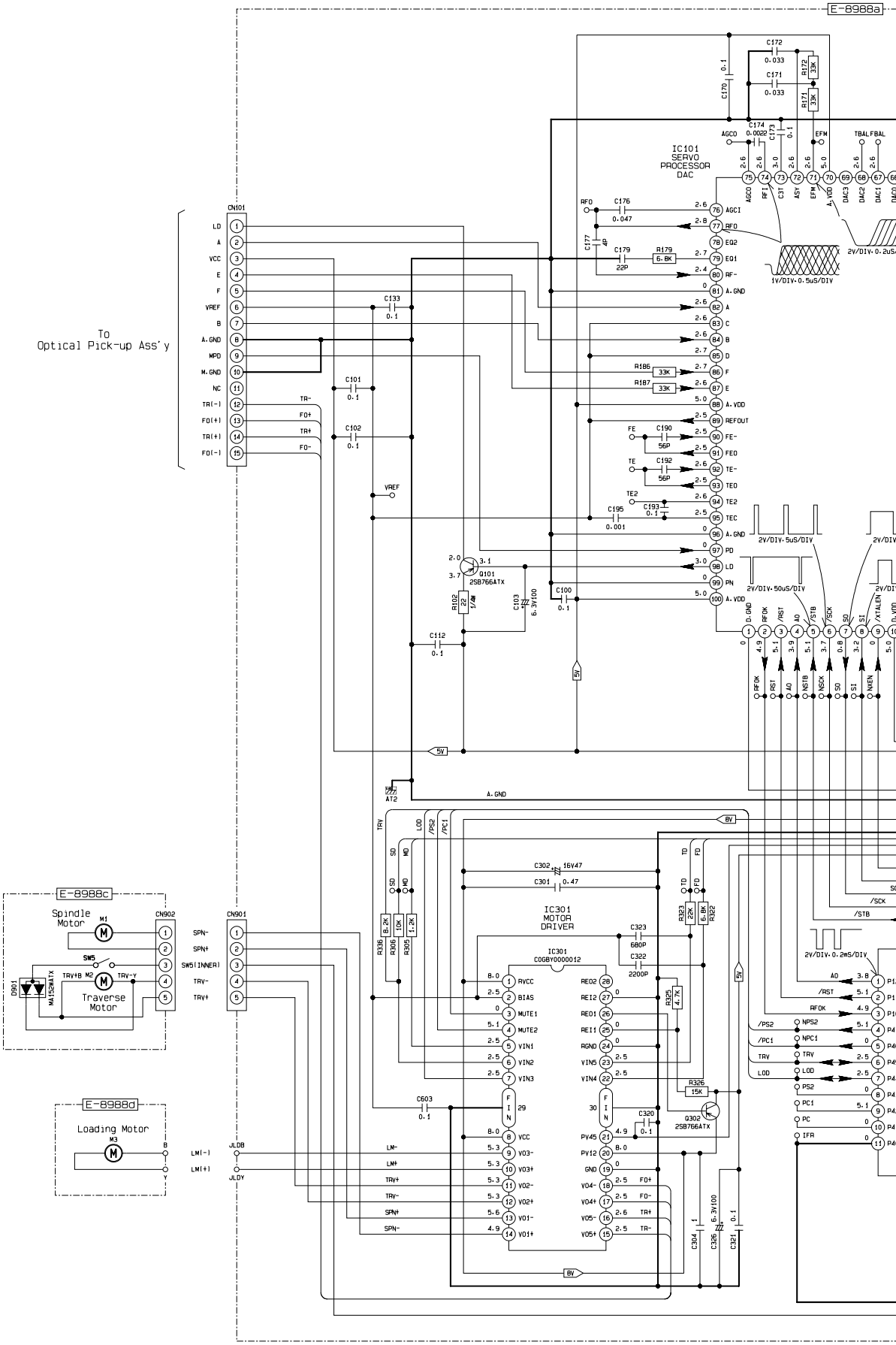

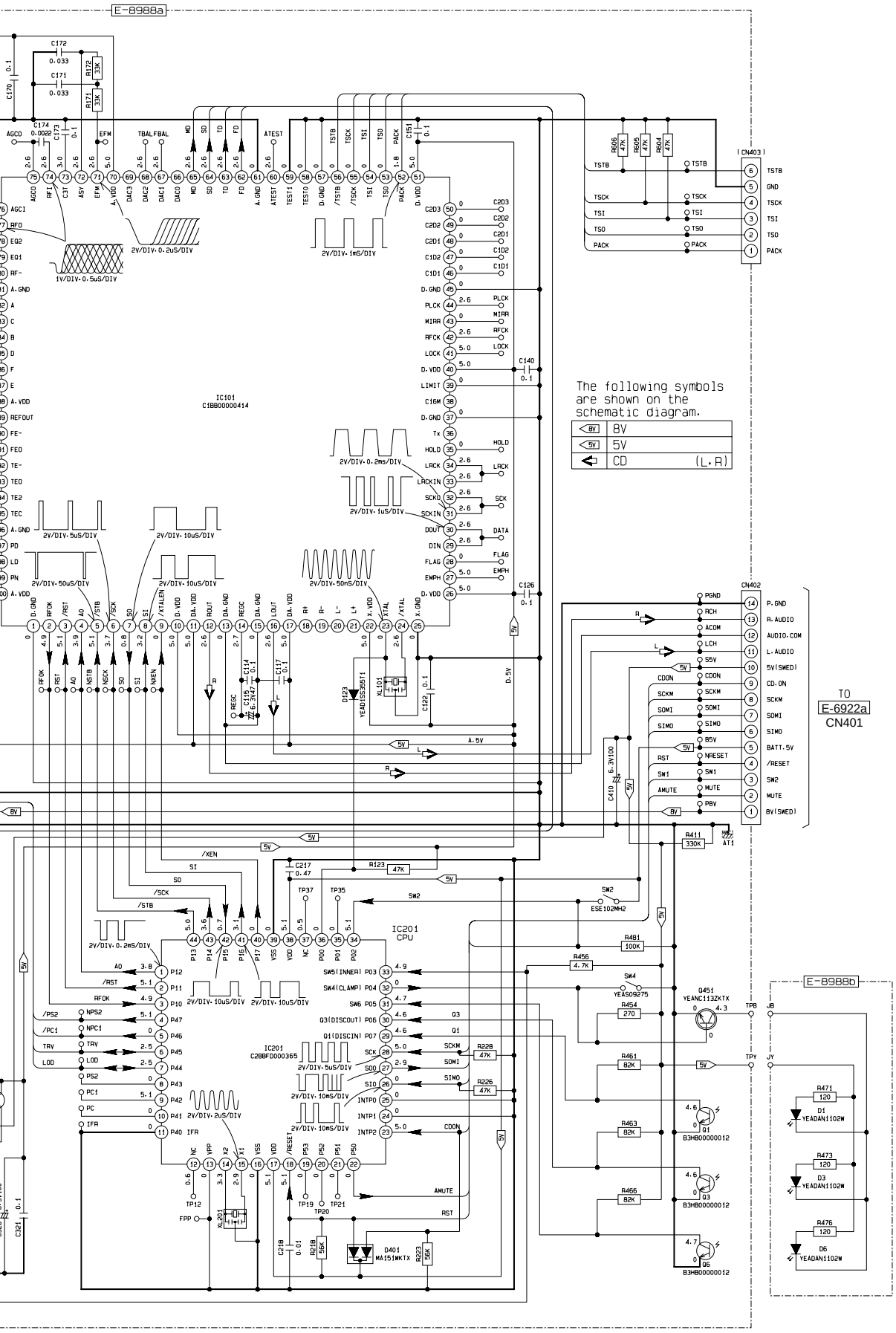

CQ-HR1003U CD DECK (NCD8)

Printed in Japan (K) 2002.12 (Recycled Paper)

20.3. Display Block

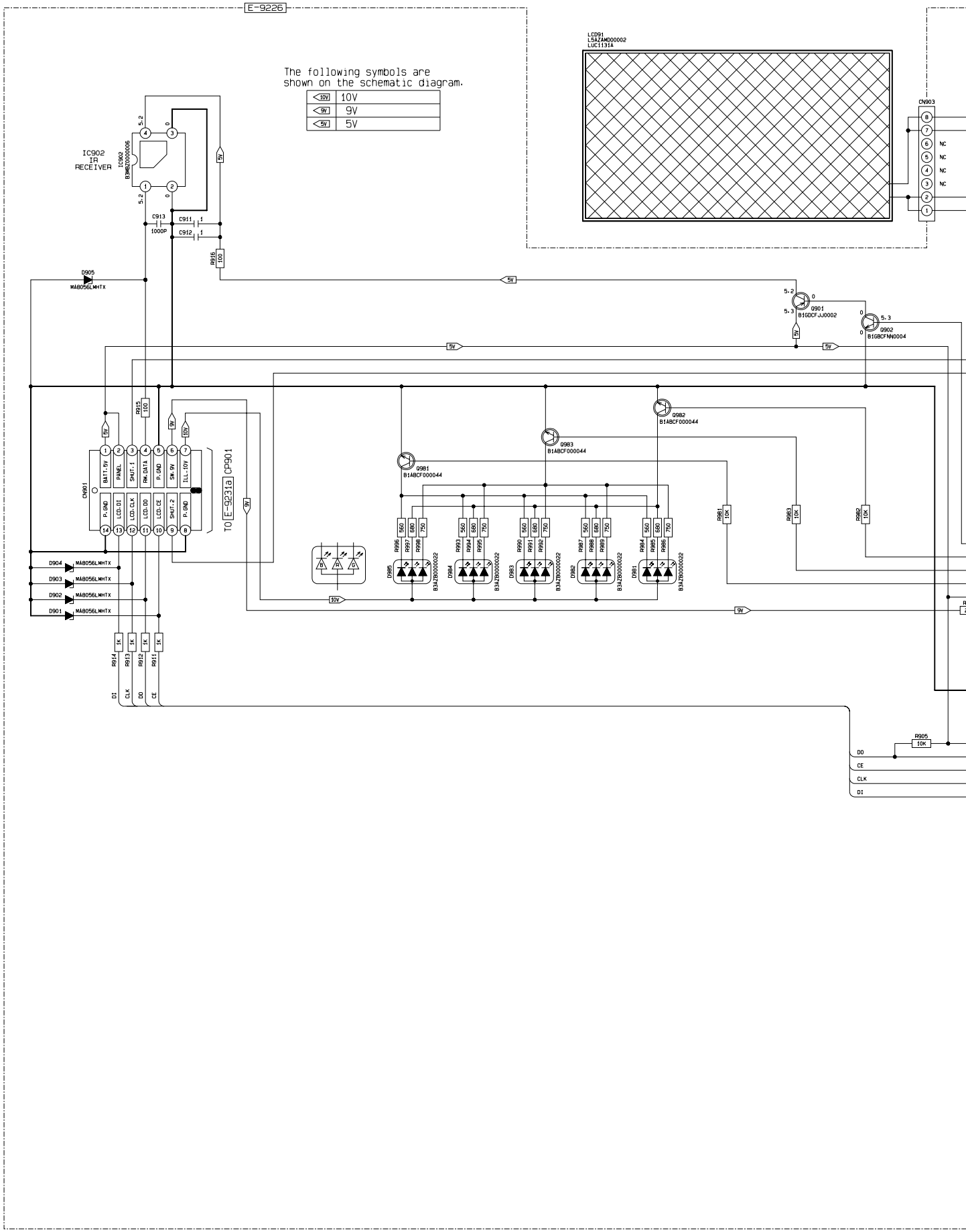

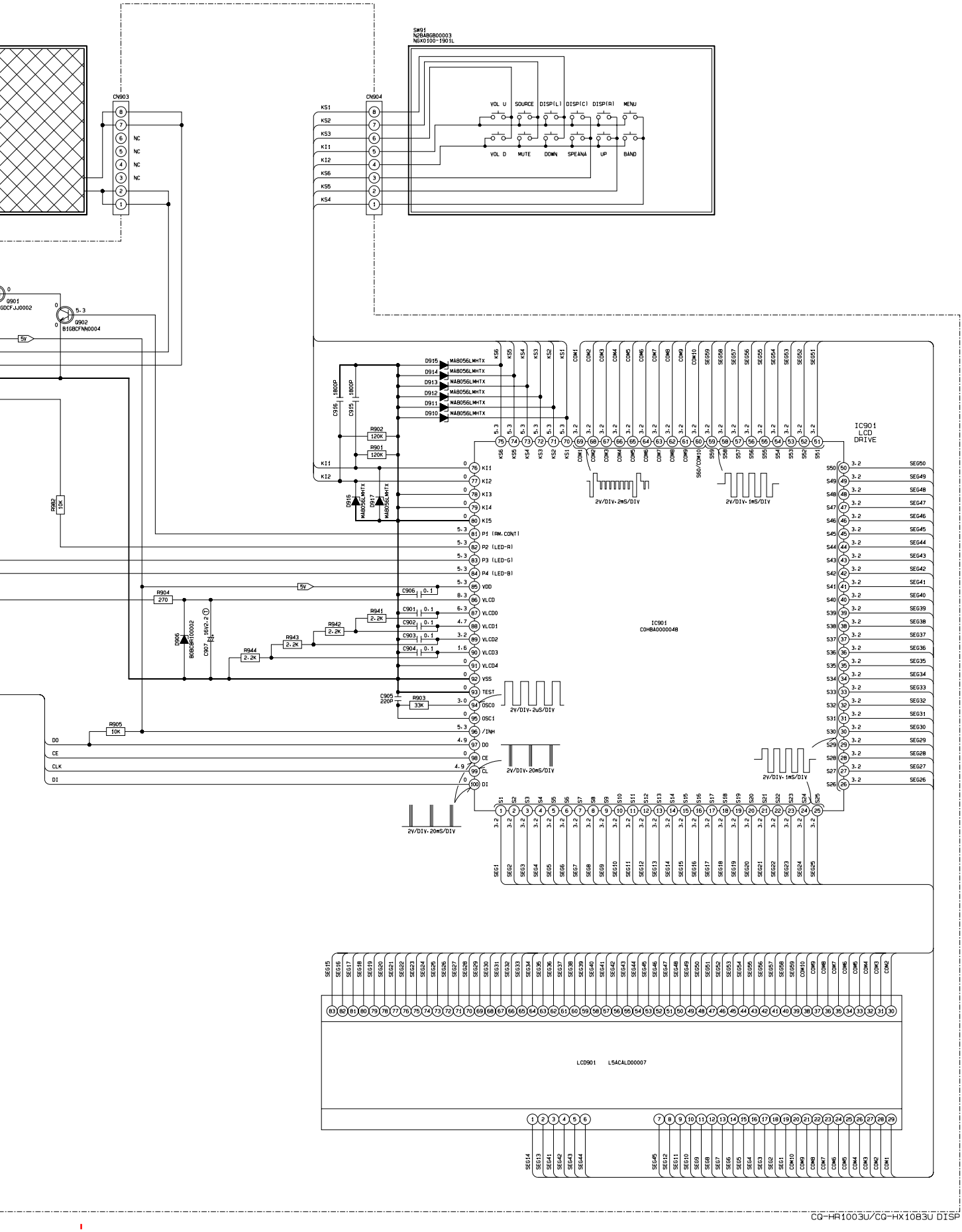
SW91
N2BA98B00003
NGX0100-1901L
CN903
CN904
VOL U
SOURCE
DISP(L)
DISP(C)
DISP(R)
MENU
VOL D
MUTE
DOWN
SPEANA
UP
BAND
IC901
LCD
DRIVE
IC901
C0HBA000004
LCD901 L5ACALD00007
CQ-HR1003U/CQ-HX1083U DISP

The following symbols are shown on the schematic diagram.

10V	10V
9V	9V
5V	5V

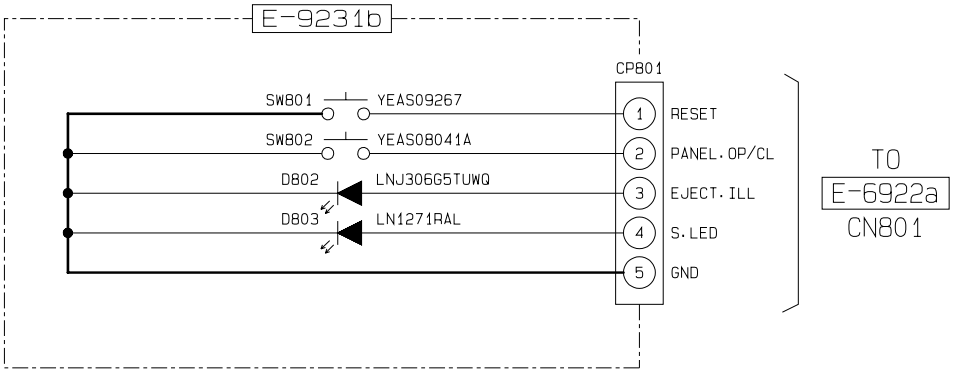

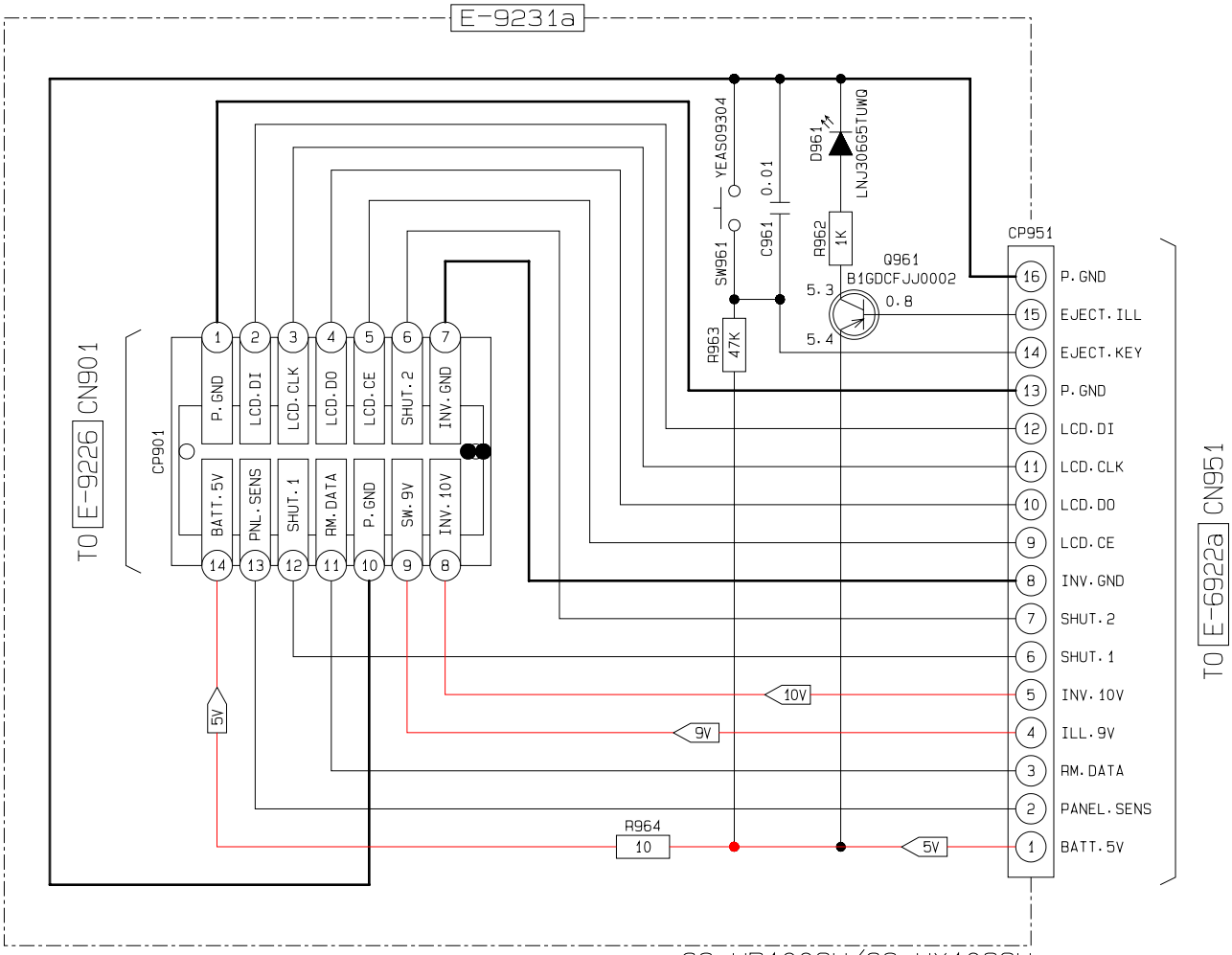

20 SCHEMATIC DIAGRAM-2

20.1. Main Block [CQ-HX1083U]

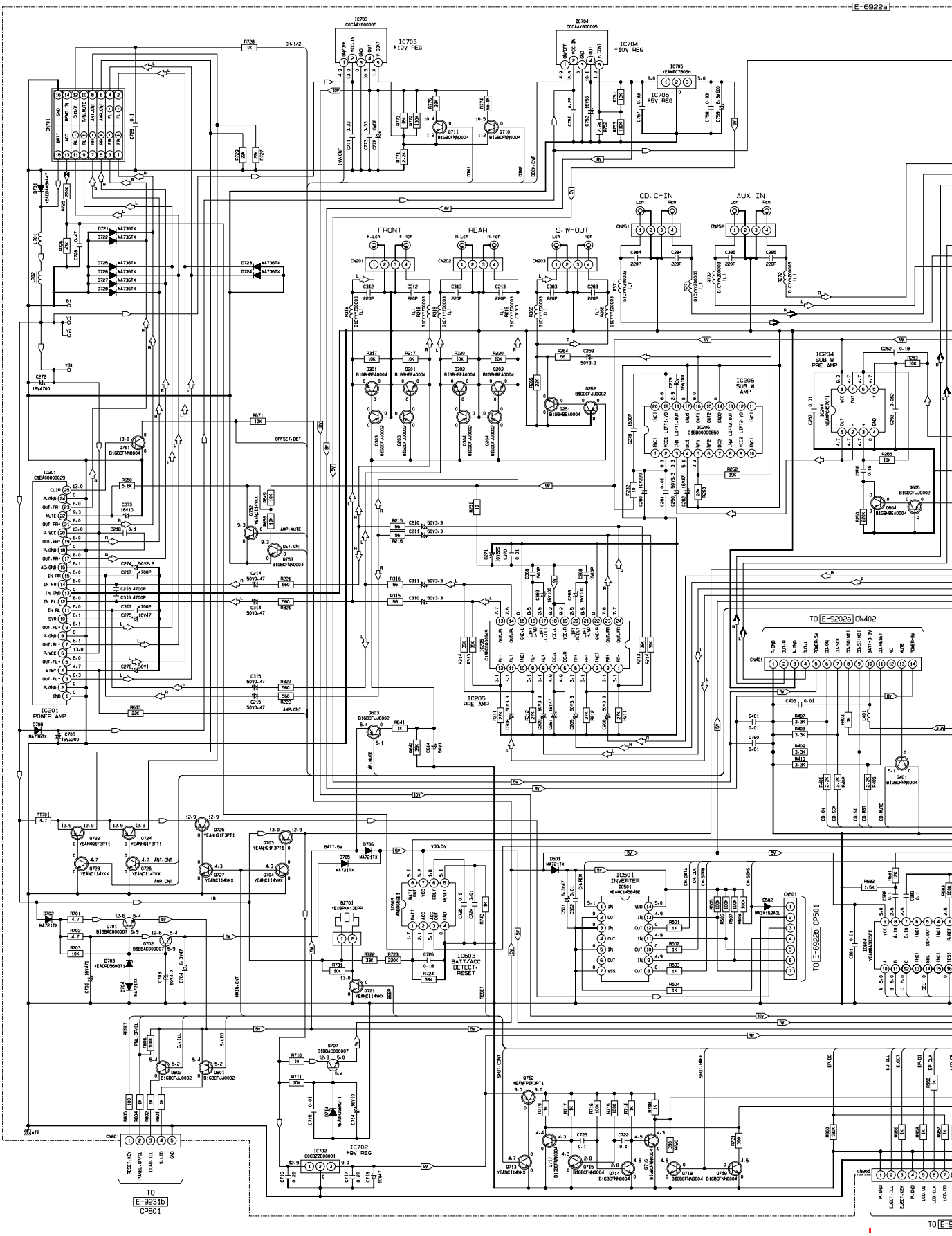

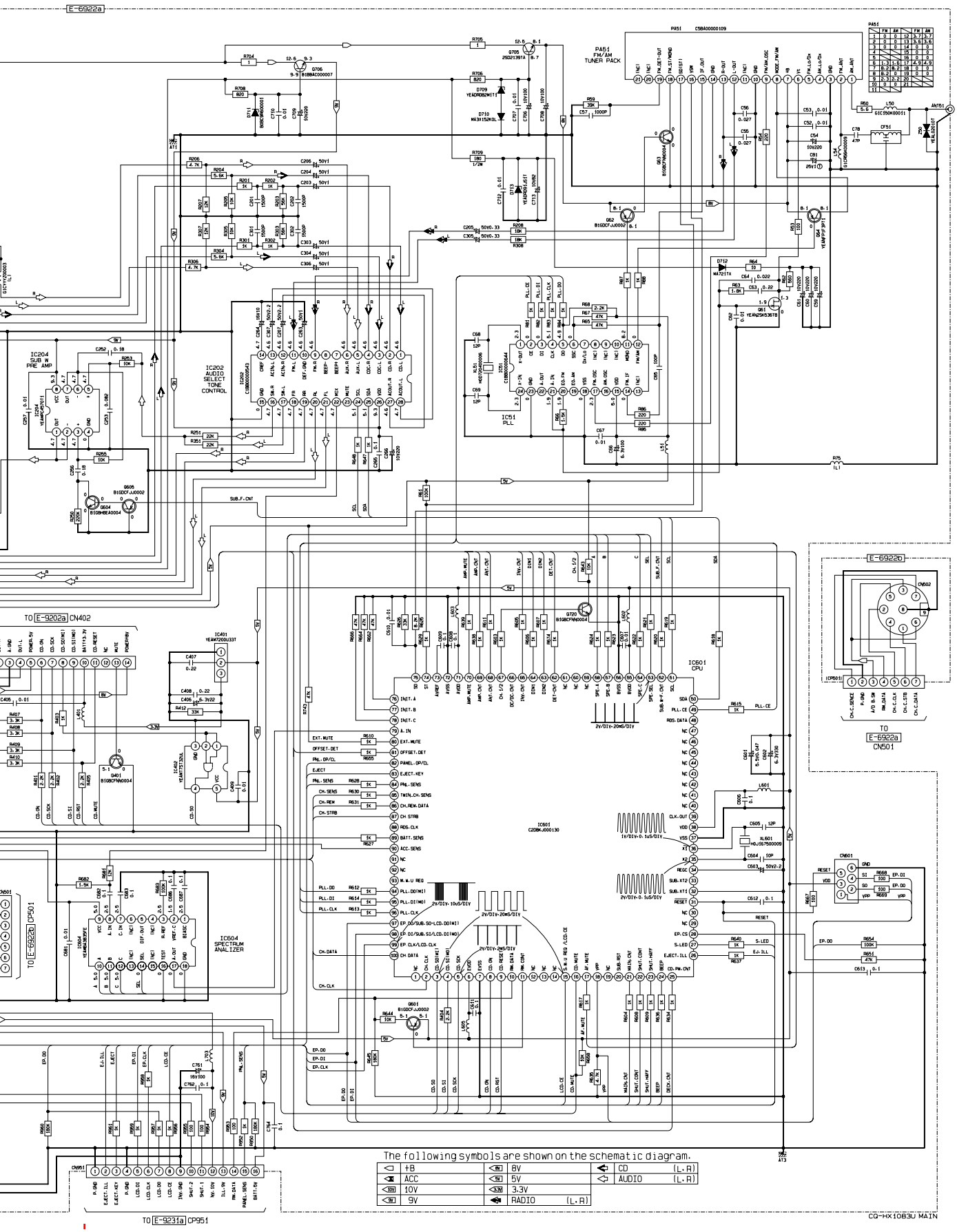

The following symbols are shown on the schematic diagram.

	+B		8V		CD	(L,R)
	ACC		5V		AUDIO	(L,R)
	10V		3.3V			
	9V		RADIO	(L,R)		

20.2. Main Block [CQ-HR1003U]

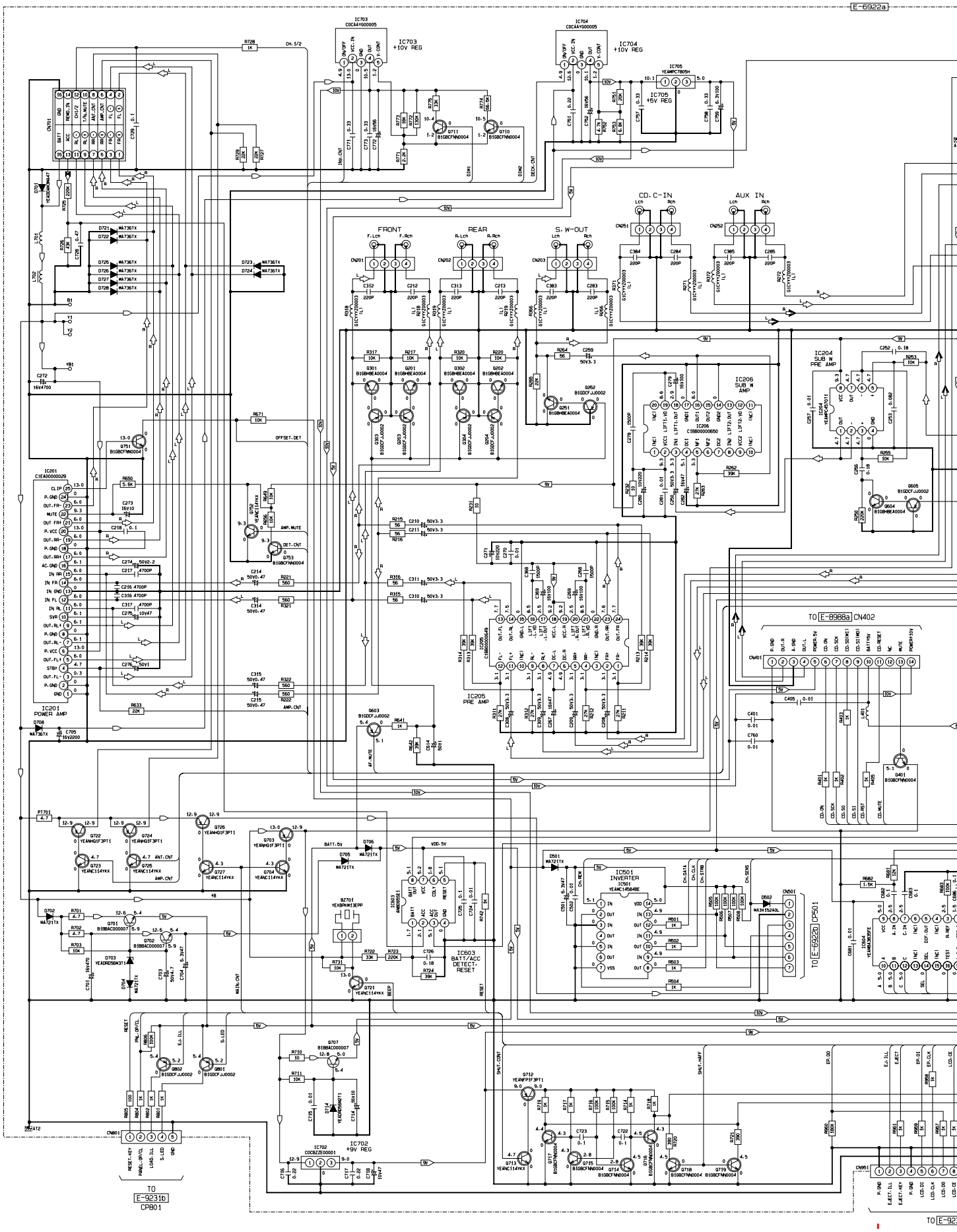

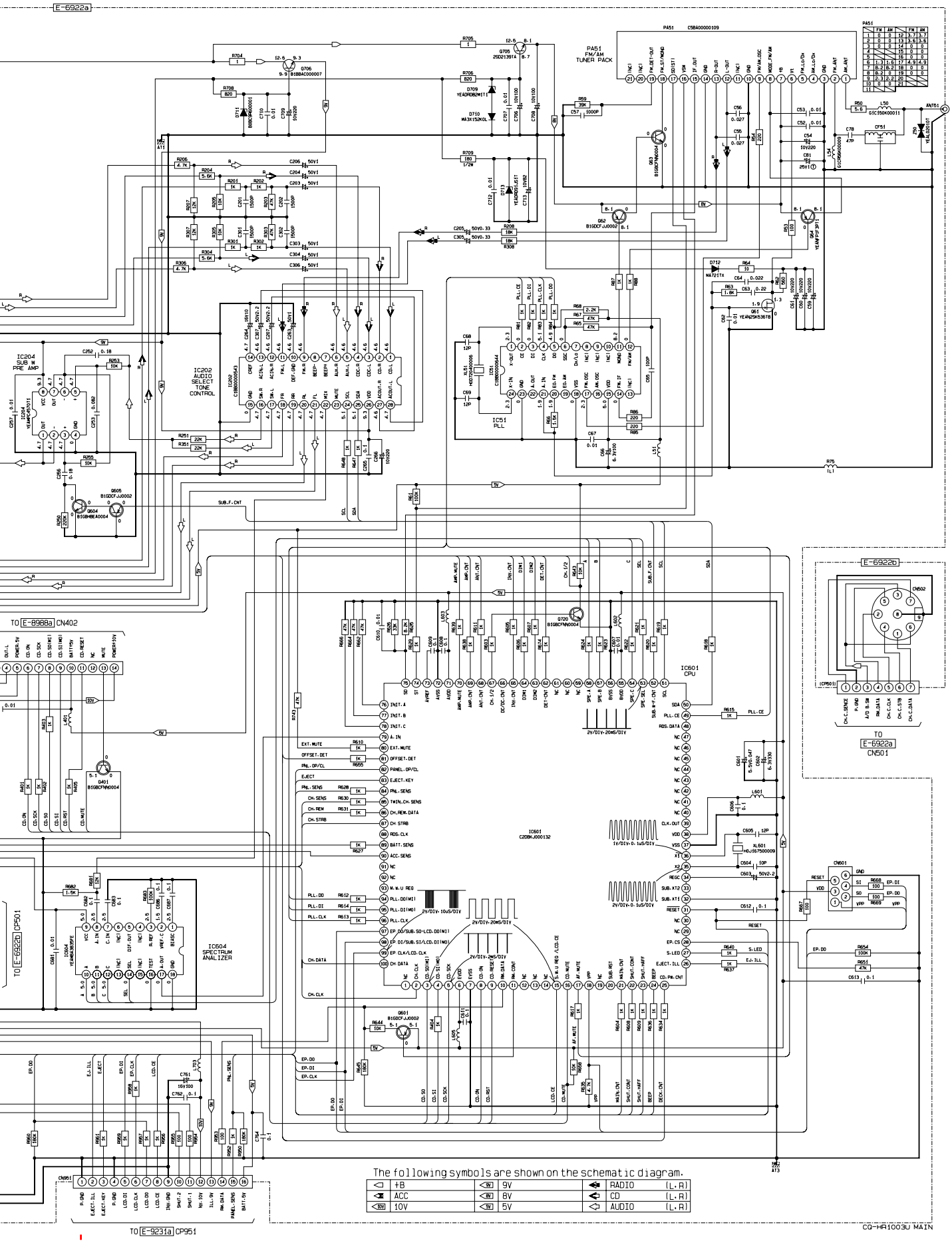

The following symbols are shown on the schematic diagram.

◁	+B	◁9V	9V	◁RADIO	(L.R)
◁8V	ACC	◁8V	8V	◁CD	(L.R)
◁10V	10V	◁5V	5V	◁AUDIO	(L.R)

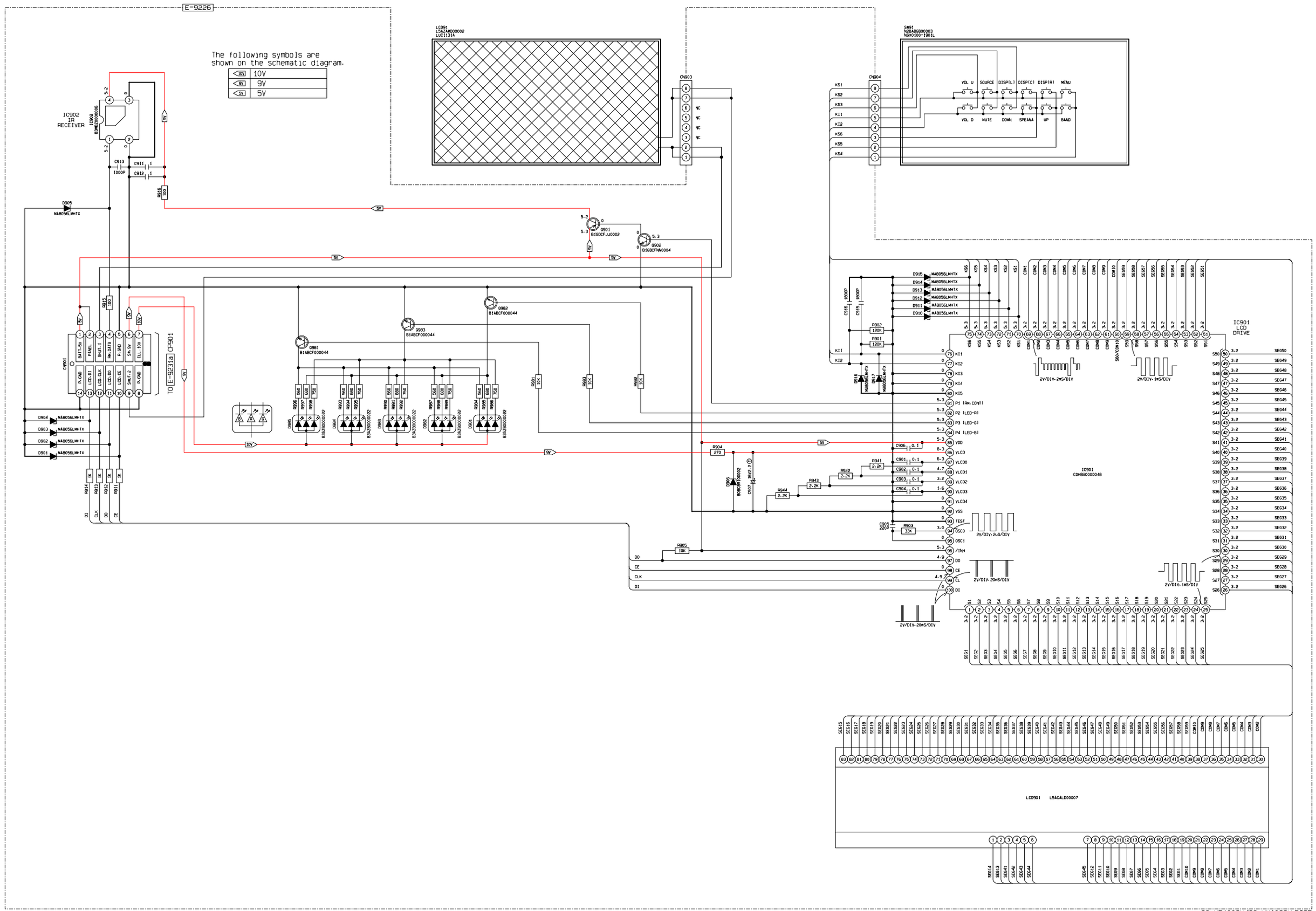
E-9226
The following symbols are shown on the schematic diagram.
10V
9V
5V
IC902 IR RECEIVER
LCD91 L5AZAM000002 LUC1131A
CN903
CN904
SW91 N28A8G800003 NGX0100-1901L
VOL U
SOURCE
DISP(L)
DISP(C)
DISP(R)
MENU
VOL D
MUTE
DOWN
SPEANA
UP
BAND
Q901 B1GDCFJJ0002
Q902 B1GBCFNN0004
D981 B1ABCF000044
D982 B1ABCF000044
D983 B1ABCF000044
D905 MA8056LMHTX
CN901
TO E-6231a CP501
IC901 LCD DRIVE
IC901 C0HBA000004B
2V/DIV·2mS/DIV
2V/DIV·1mS/DIV
2V/DIV·2uS/DIV
2V/DIV·20mS/DIV
LCD901 L5ACALD00007
CG-HR1003U/CG-HX1083U DISP

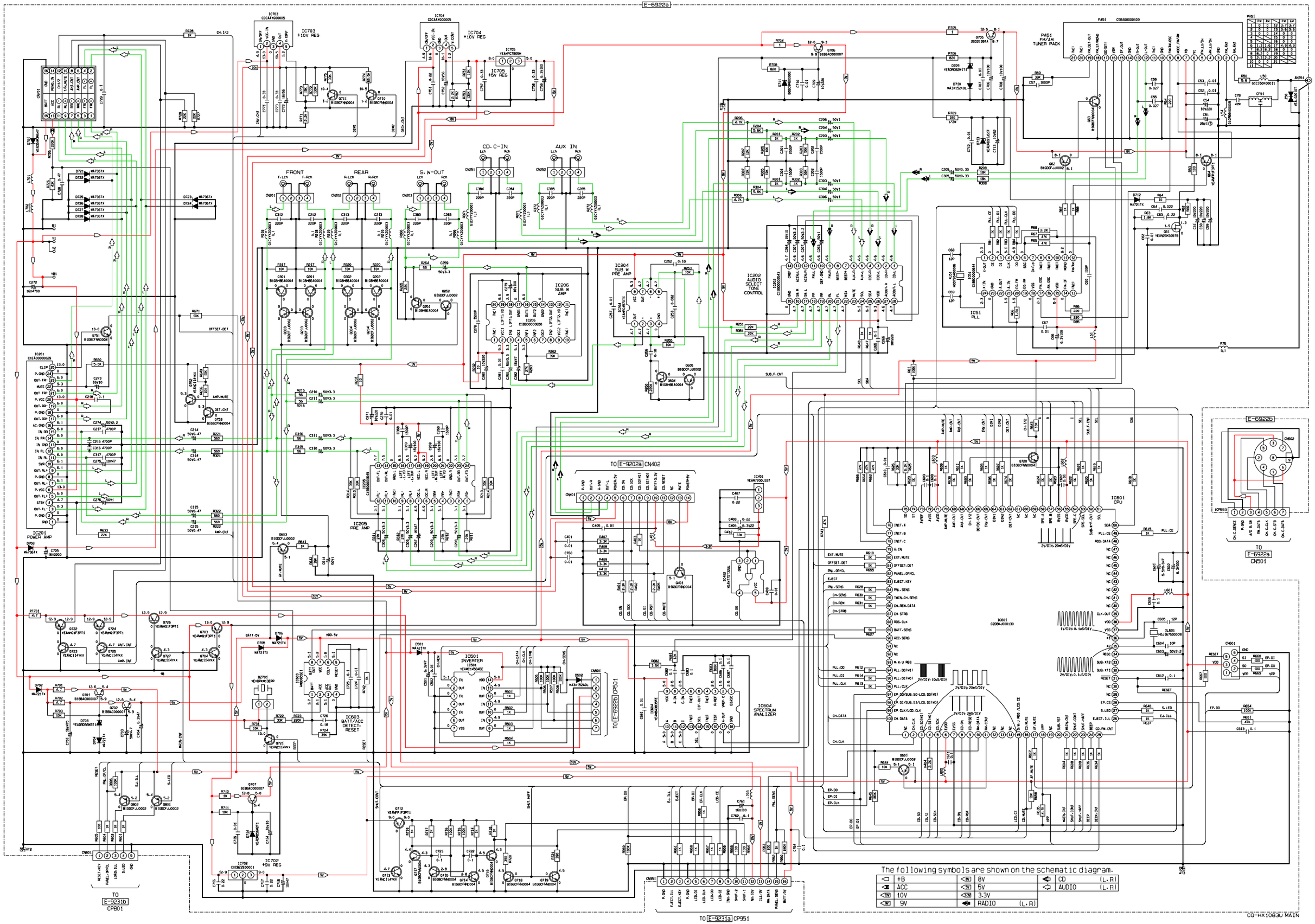
E-6922a
IC703 +10V REG
IC704 +10V REG
IC705 +5V REG
CN701
FRONT
REAR
S.W-OUT
CD.C-IN
AUX IN
IC204 SUB W PRE AMP
IC206 SUB W AMP
IC202 AUDIO SELECT TONE CONTROL
PA51 FM/AM TUNER PACK
IC51 PLL
IC201 POWER AMP
IC205 PRE AMP
TO E-9202a CN402
IC601 CPU
IC601 CZ0BK.J000130
IC501 INVERTER
IC603 BATT/ACC DETECT-RESET
IC604 SPECTRUM ANALIZER
TO E-6922b CP501
IC702 +9V REG
TO E-9231b CP801
TO E-9231a CP951
TO E-6922a CN501
E-6922b
The following symbols are shown on the schematic diagram.
+B
ACC
10V
9V
8V
5V
3.3V
RADIO (L,R)
CD (L,R)
AUDIO (L,R)
CQ-HX1083U MAIN

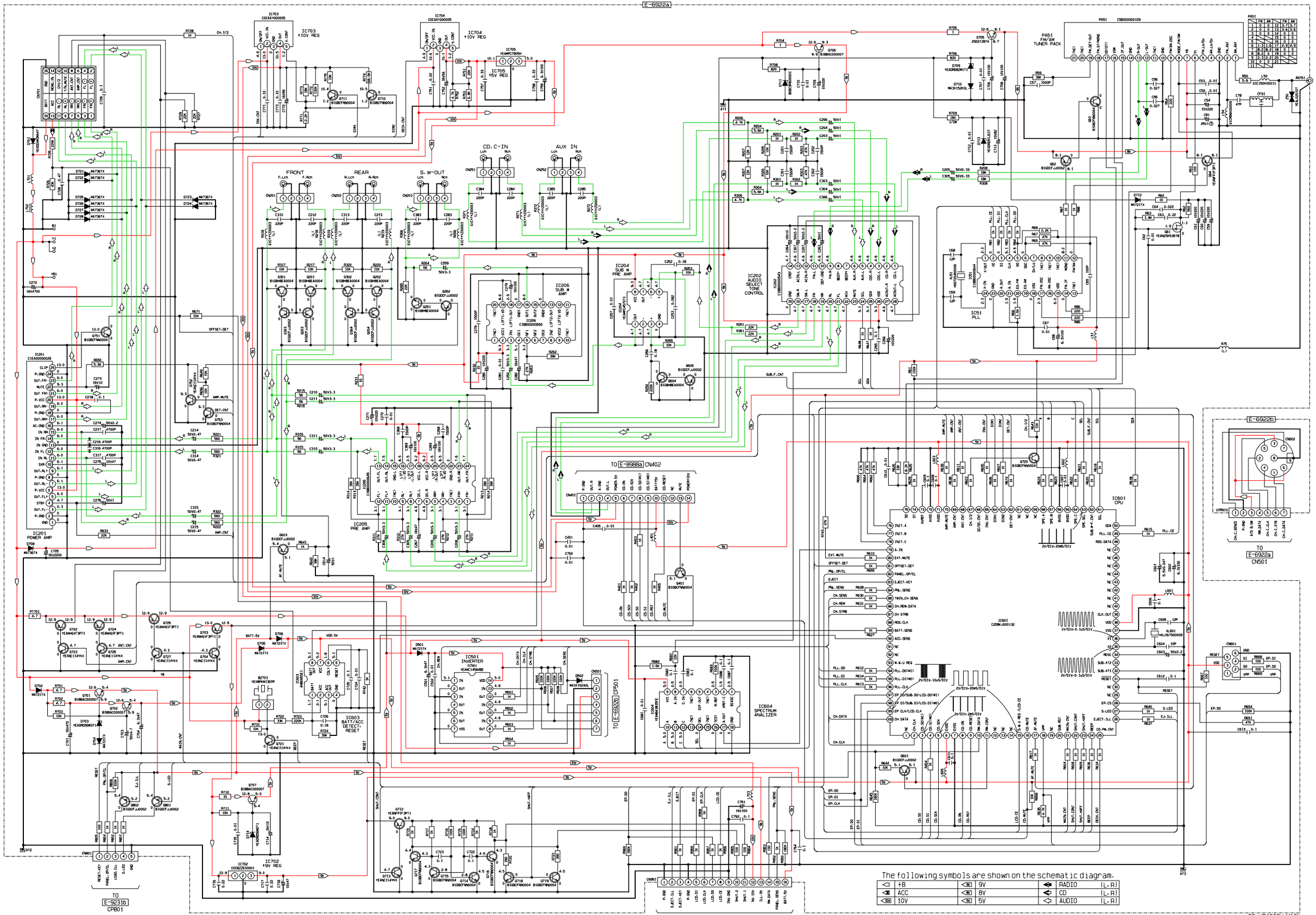
E-6922a
IC703 +10V REG
IC704 +10V REG
IC705 +5V REG
CN701
FRONT
REAR
S.W-OUT
CD.C-IN
AUX IN
IC202 AUDIO SELECT TONE CONTROL
IC204 SUB W PRE AMP
IC206 SUB W AMP
IC205 PRE AMP
IC201 POWER AMP
PA51 FM/AM TUNER PACK
IC51 PLL
IC601 CPU
IC601 CZ08K-J000132
IC501 INVERTER
IC604 SPECTRUM ANALIZER
IC603 BATT/ACC DETECT RESET
IC702 +9V REG
TO E-8988a CN402
TO E-6922b CP501
TO E-9231b CP801
TO E-9231a CP951
TO E-6922a CN501
The following symbols are shown on the schematic diagram.
+B
ACC
10V
9V
8V
5V
RADIO (L.R)
CD (L.R)
AUDIO (L.R)
CQ-HR1003U MAIN

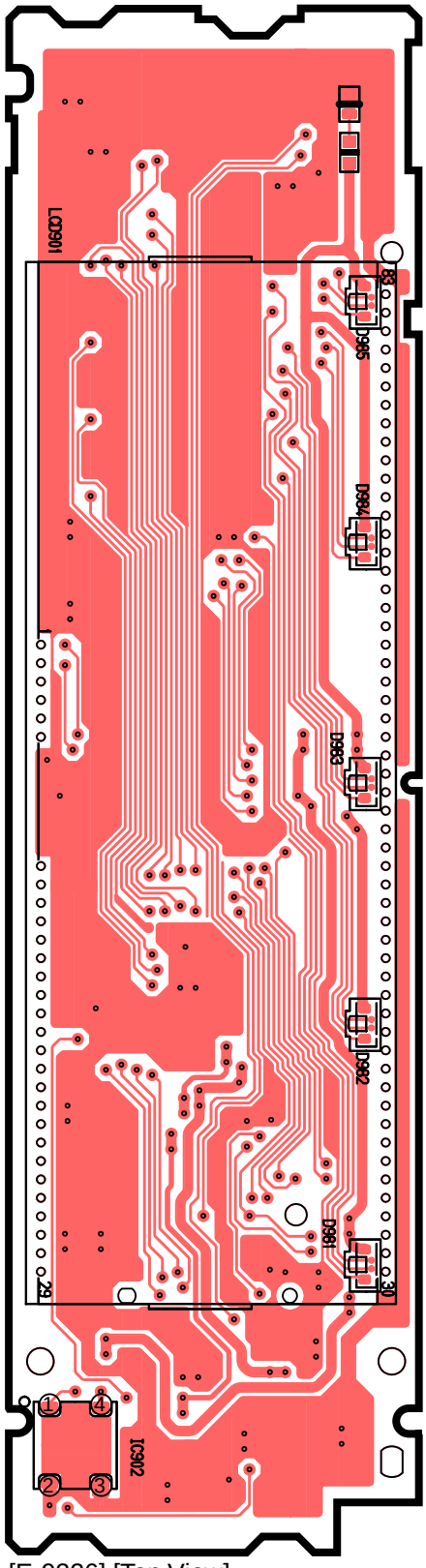

[E-9226] [Top View]

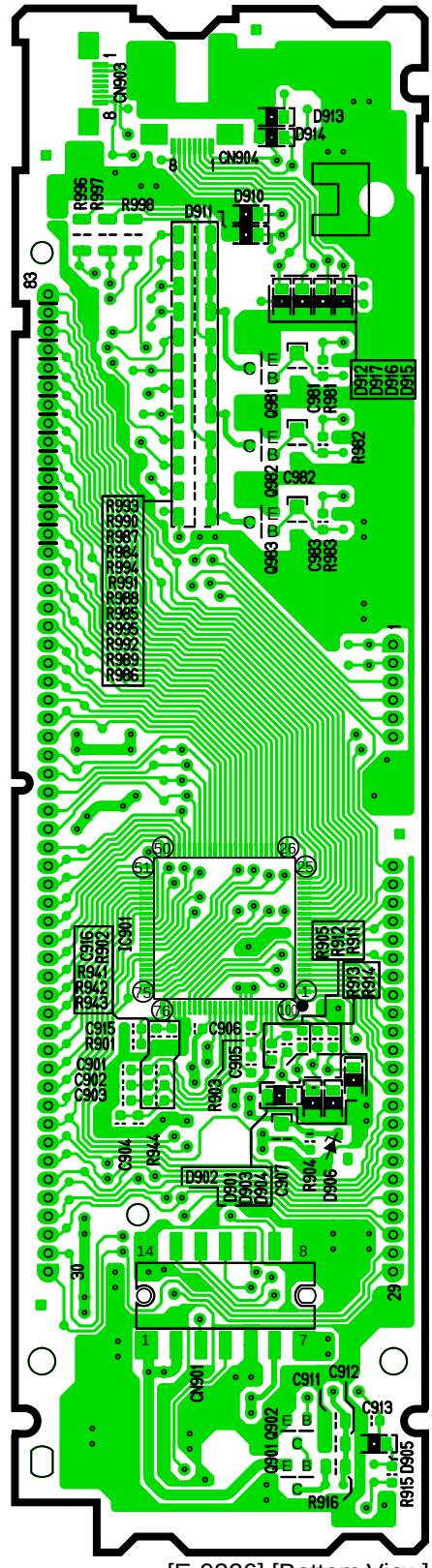

[E-9226] [Bottom View]

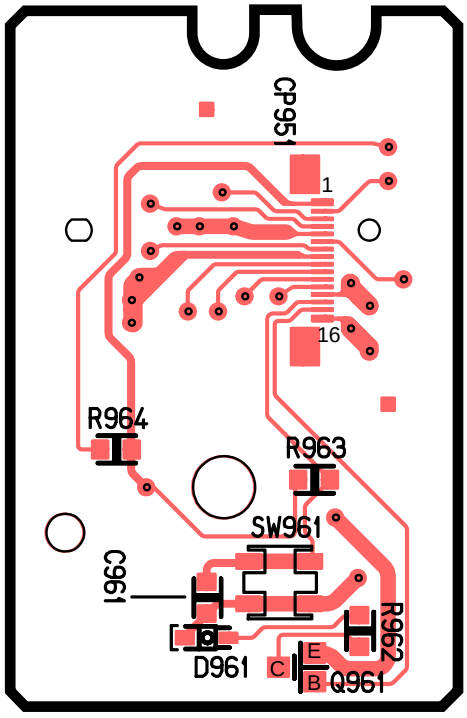

[E-9231a] [Top View]

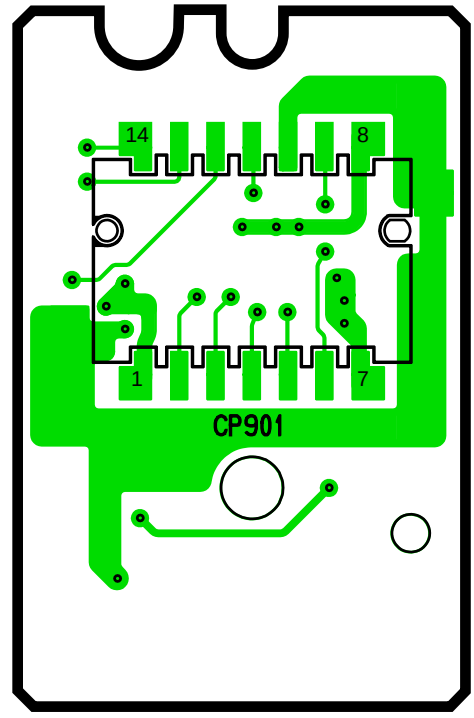

[E-9231a] [Bottom View]

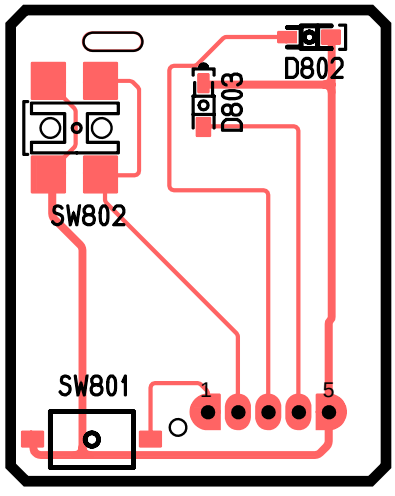

[E-9231b] [Top View]

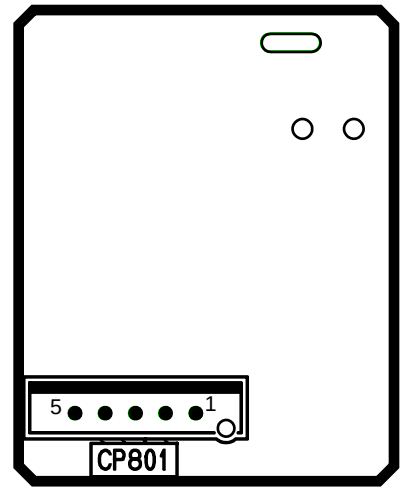

[E-9231b] [Bottom View]

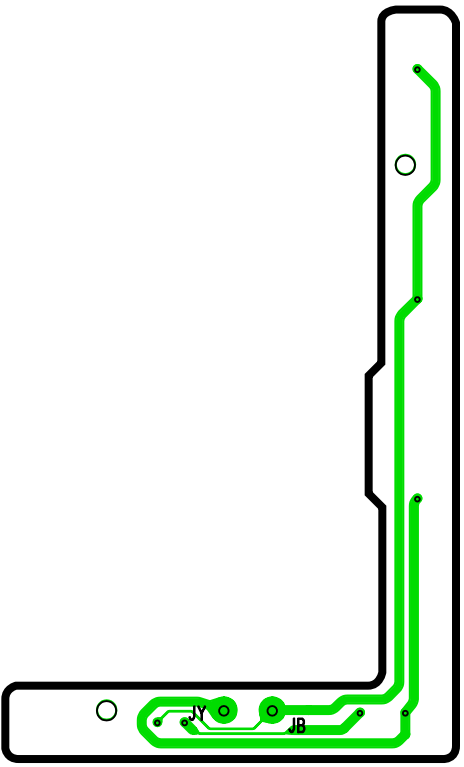

[E-8988b][Bottom View]

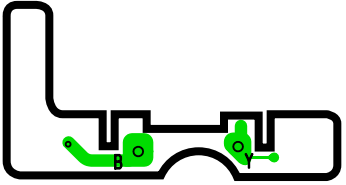

[E-8988d][Bottom View]

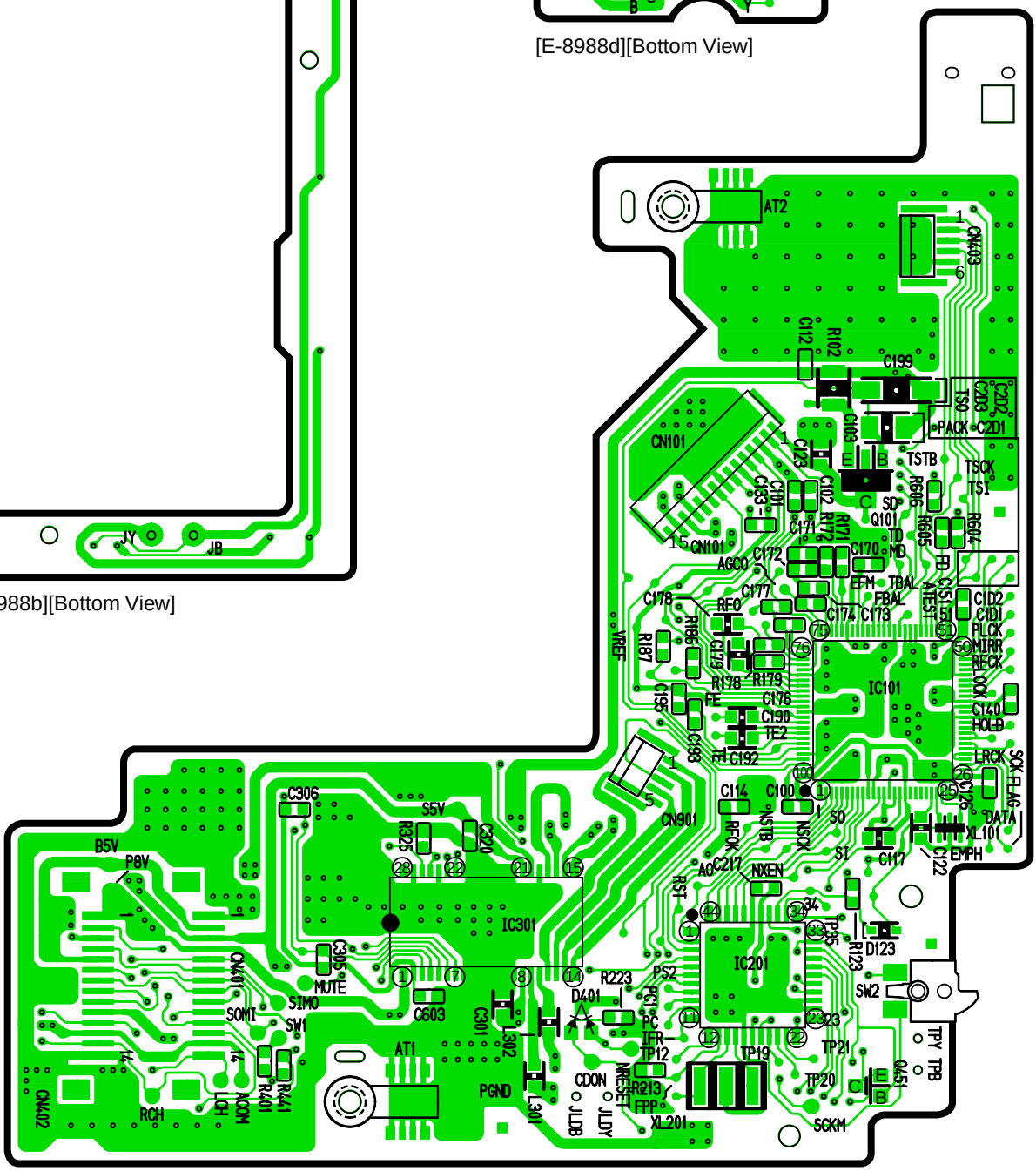

[E-8988a][Bottom View]

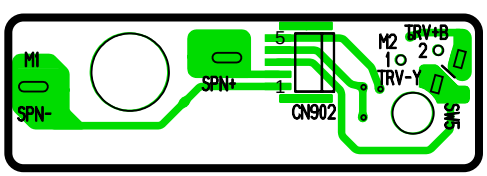

[E-8988c][Bottom View]

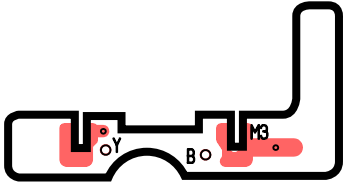

[E-8988d][Top View]

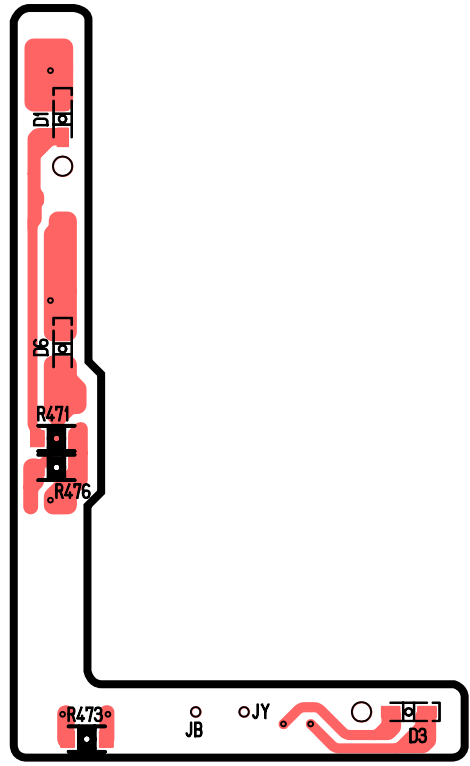

[E-8988b][Top View]

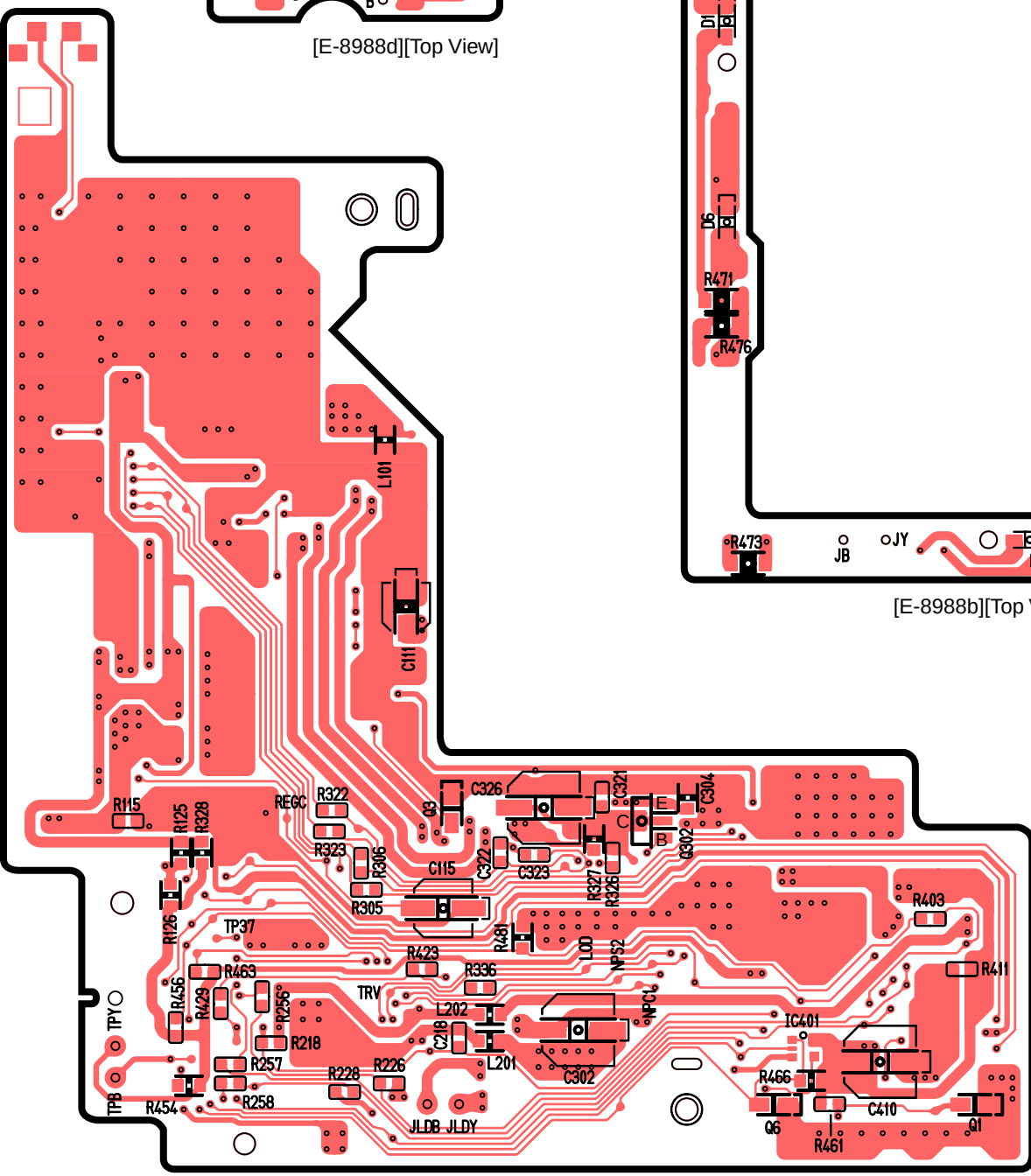

[E-8988a][Top View]

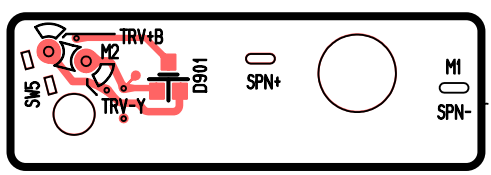

[E-8988c][Top View]

[E-9202d] [Bottom View]

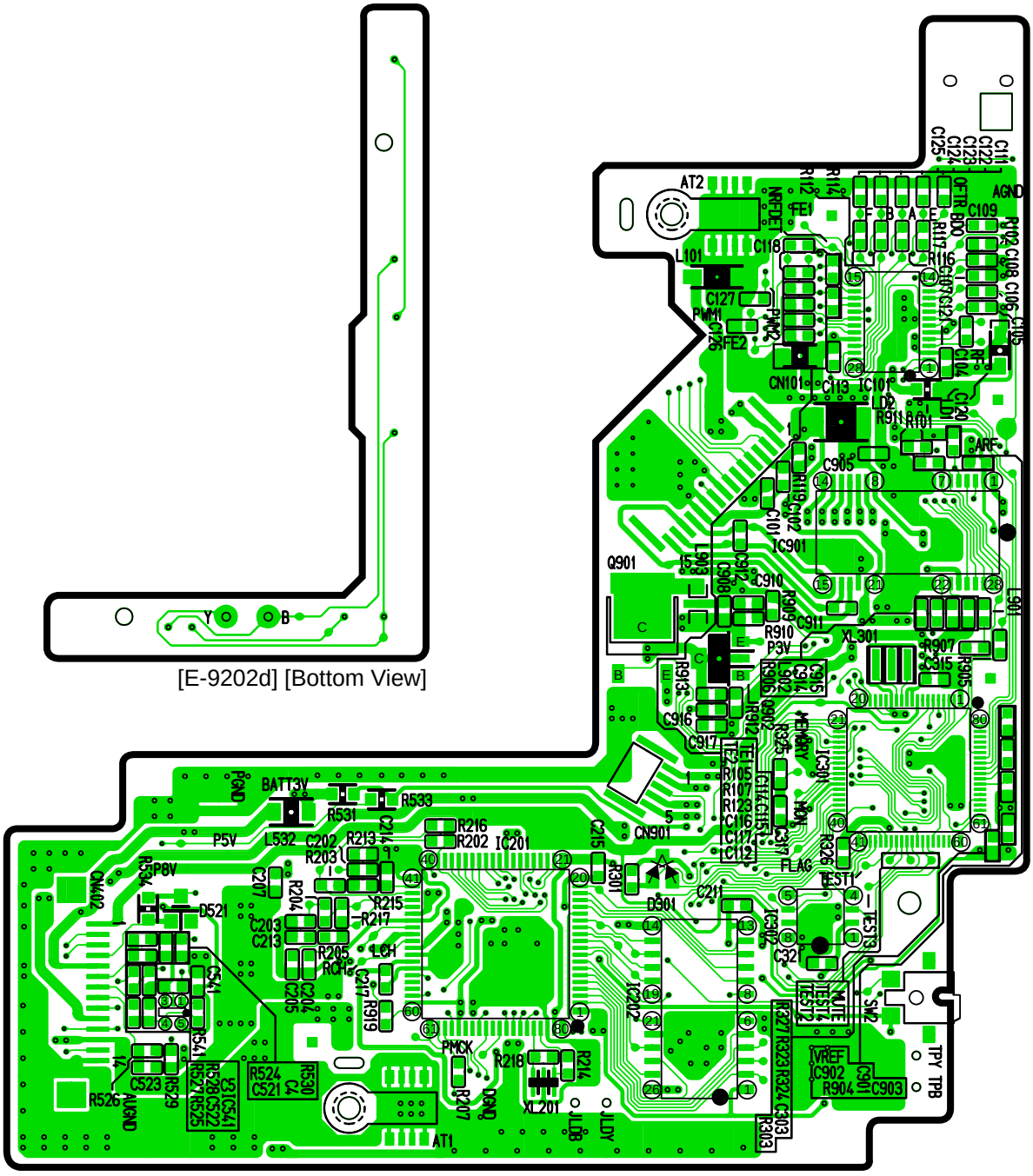

[E-9202a] [Bottom View]

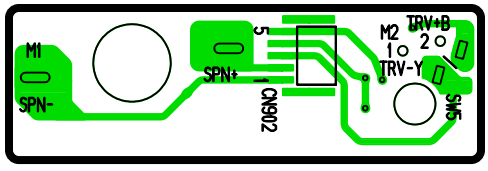

[E-9202b] [Bottom View]

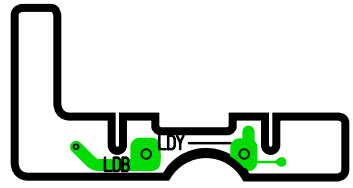

[E-9202c] [Bottom View]

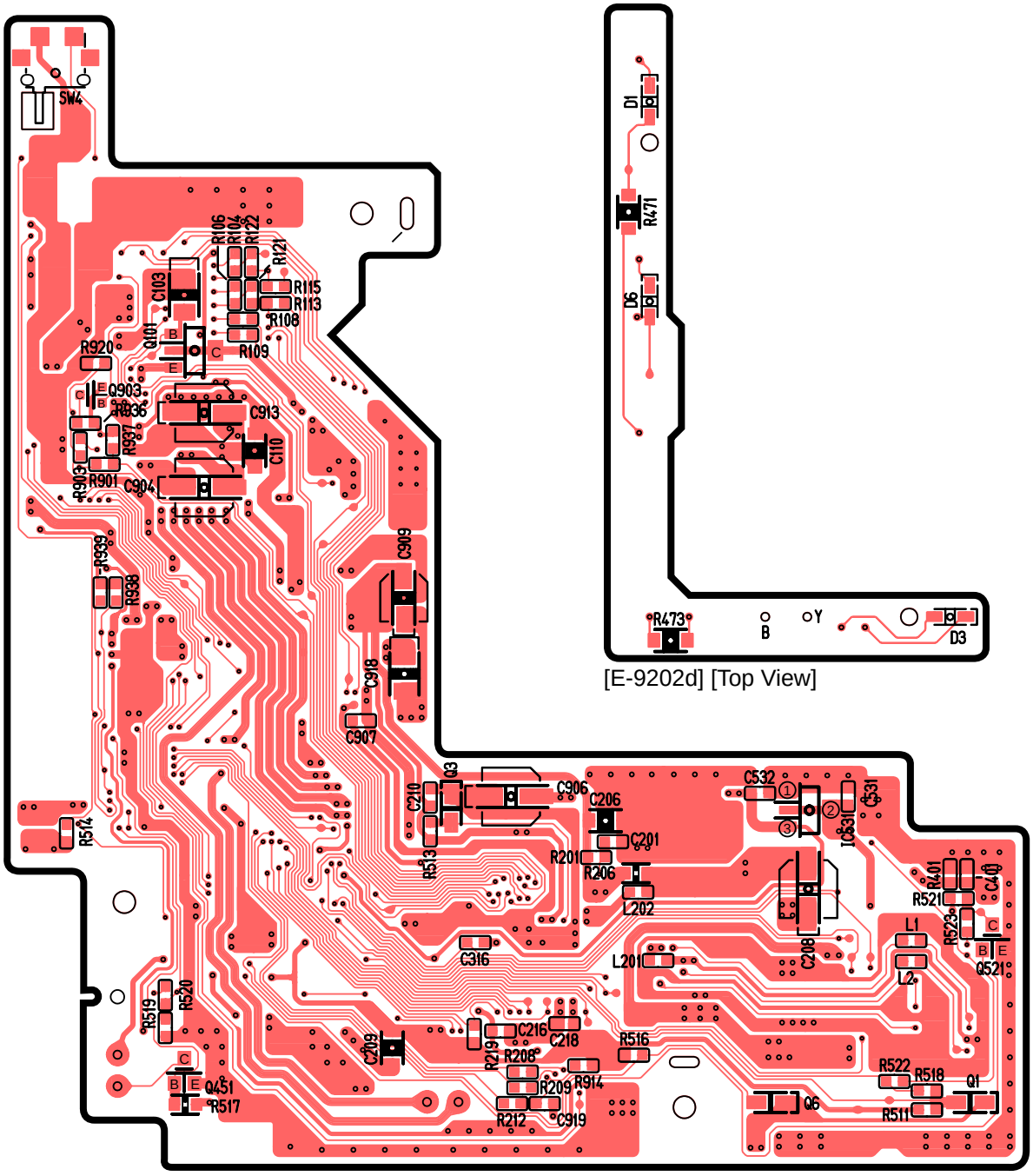

[E-9202a] [Top View]

[E-9202d] [Top View]

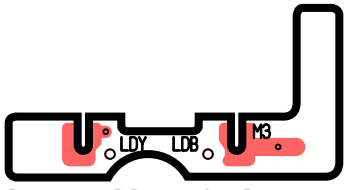

[E-9202c] [Top View]

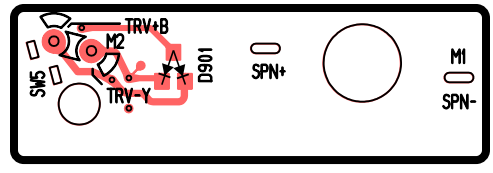

[E-9202b] [Top View]

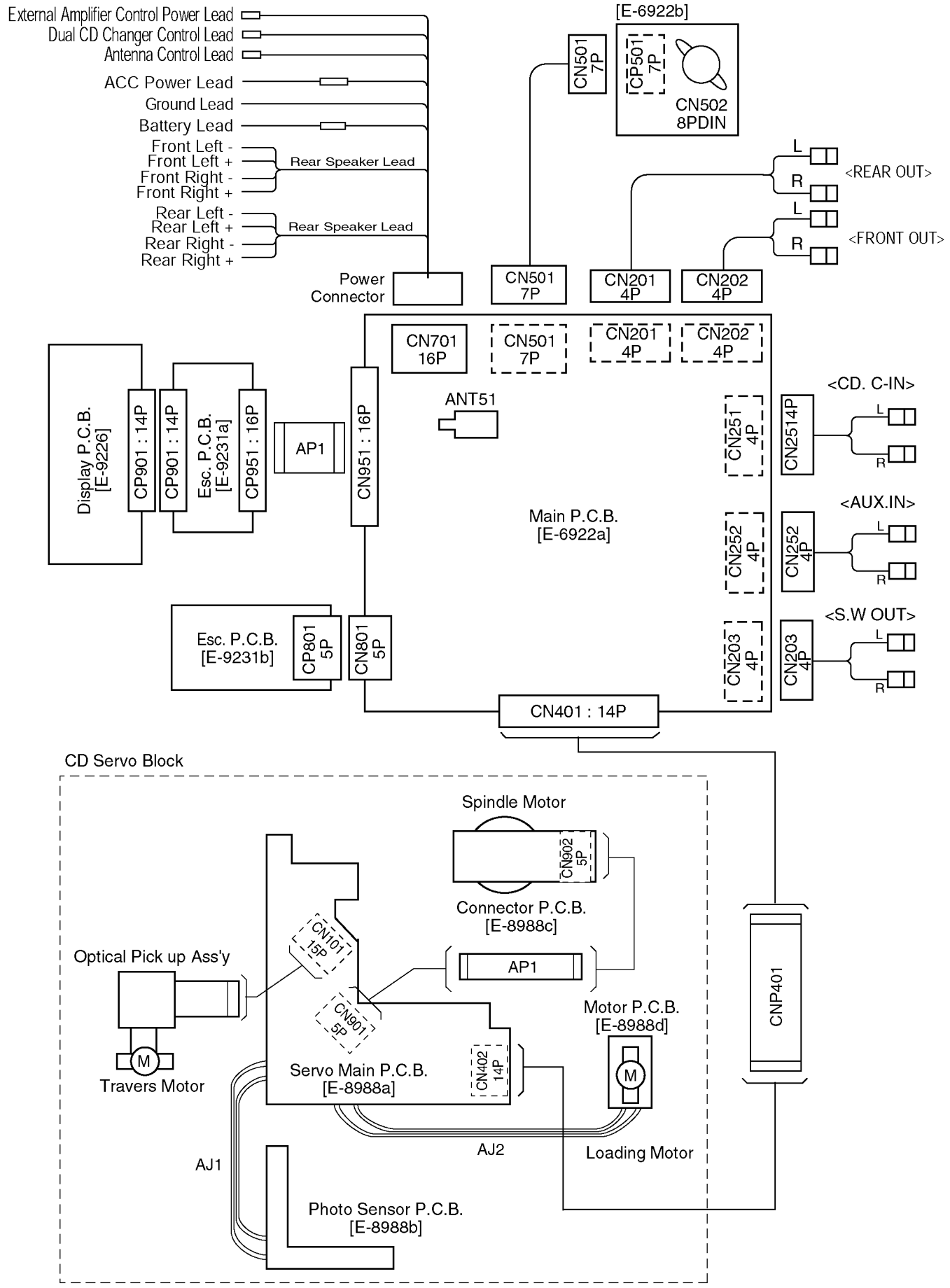

<Note> :

[ ] ·····This mark shows a Ref. No. of connector

[- - -] ·····This mark shows a mounting position of connector.

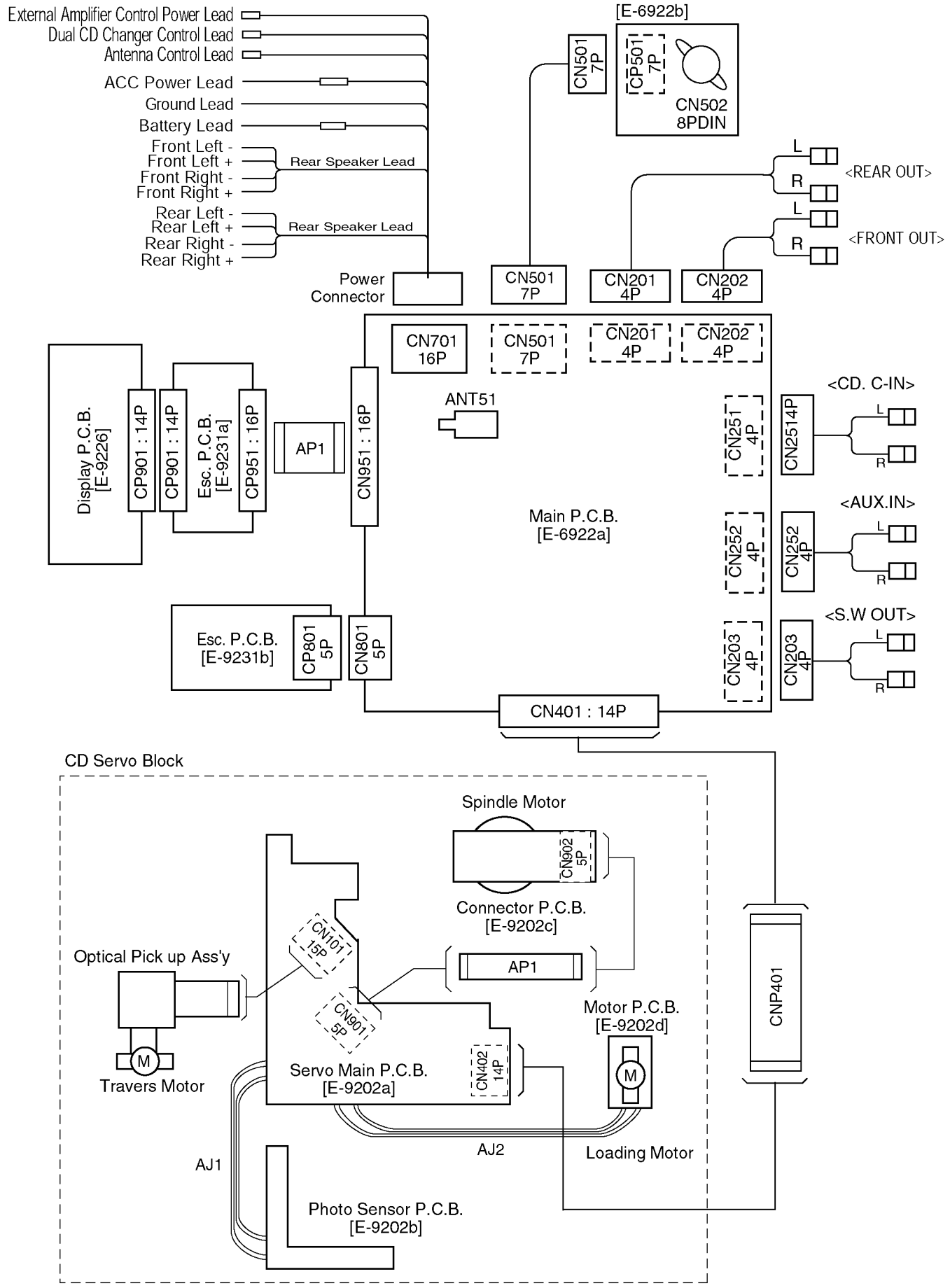

<Note> :

[ ] ·····This mark shows a Ref. No. of connector

[- - -] ·····This mark shows a mounting position of connector.

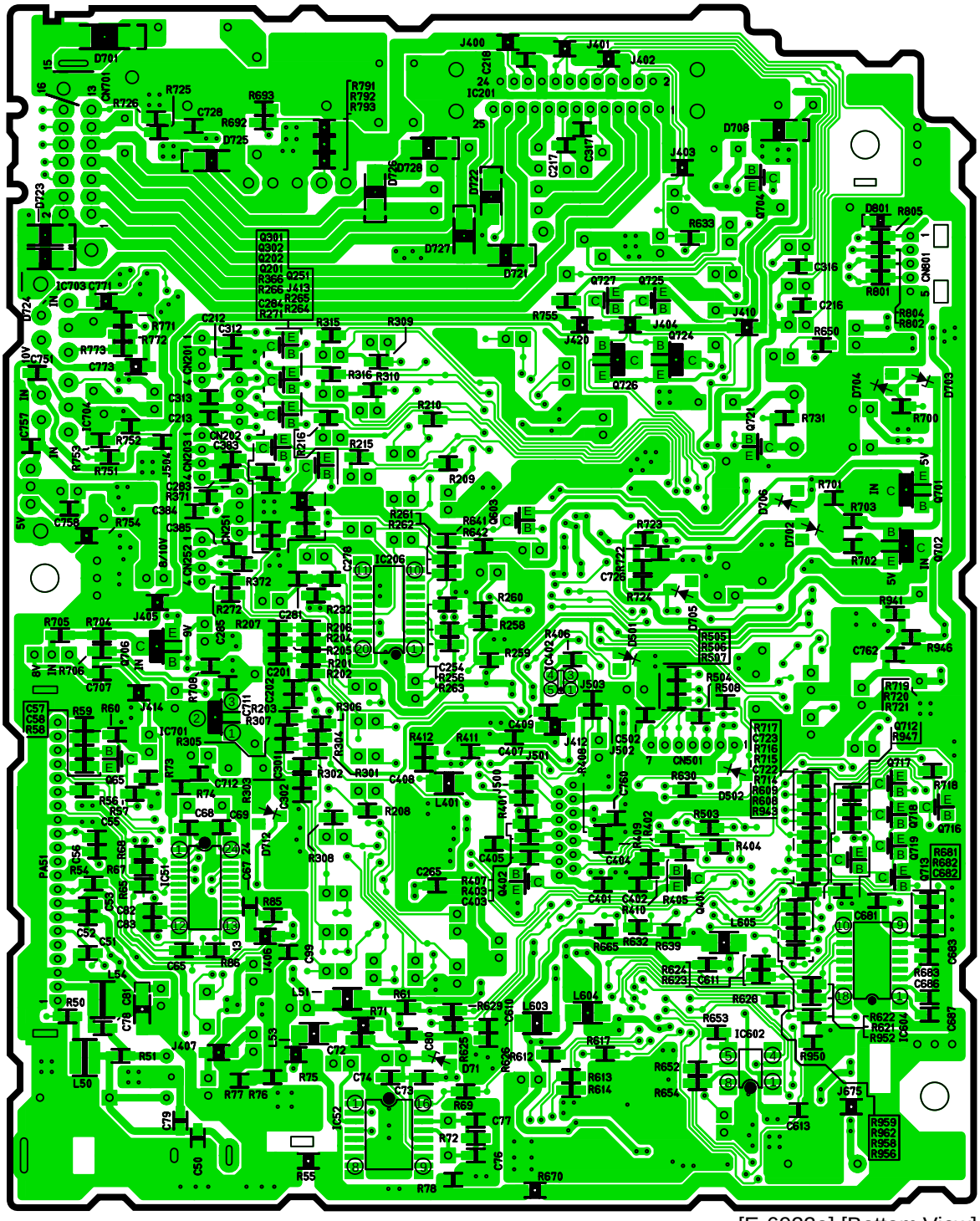

[E-6922a] [Bottom View]

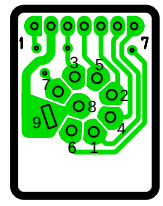

[E-6922b]
[Bottom View]

CQ-HX1083U/HR1003U MAIN P.C.B

[E-6922a] [Top View]

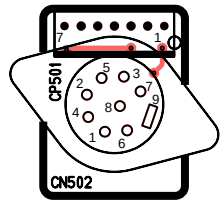

[E-6922b]
[Top View]