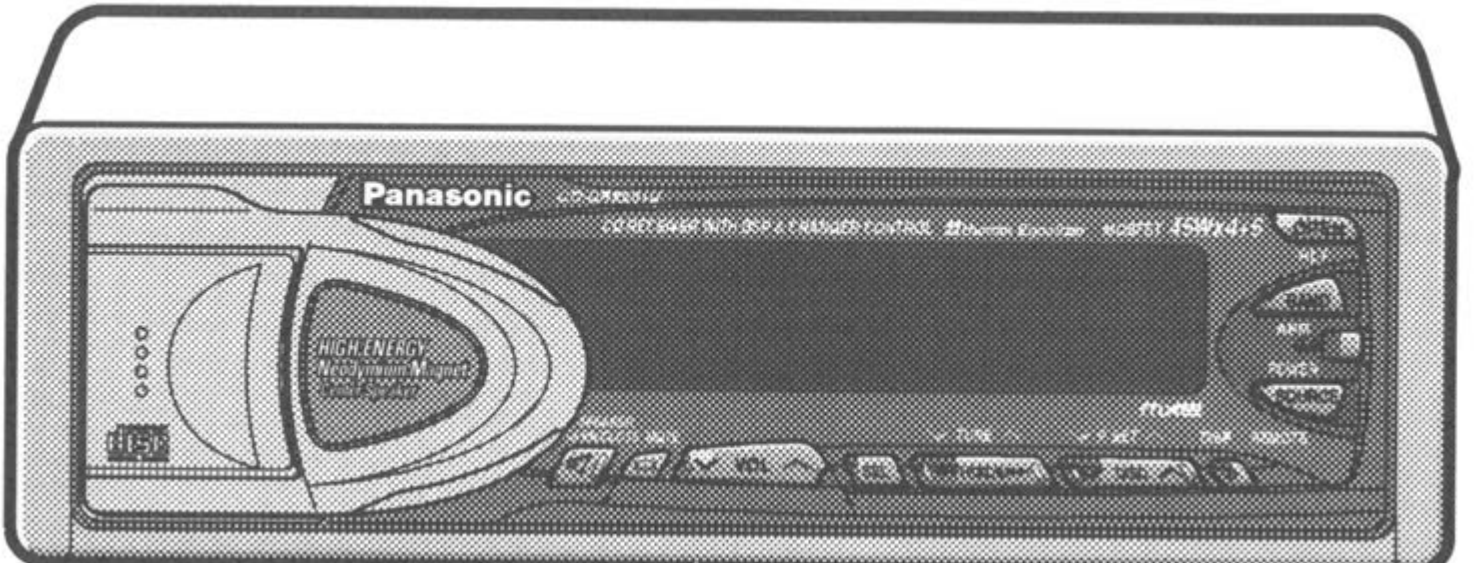
Panasonic
HIGH ENERGY
Neodymium Magnet
VOL
TUNE
SET
DISP
REMOTE
ANTI
POWER
SOURCE

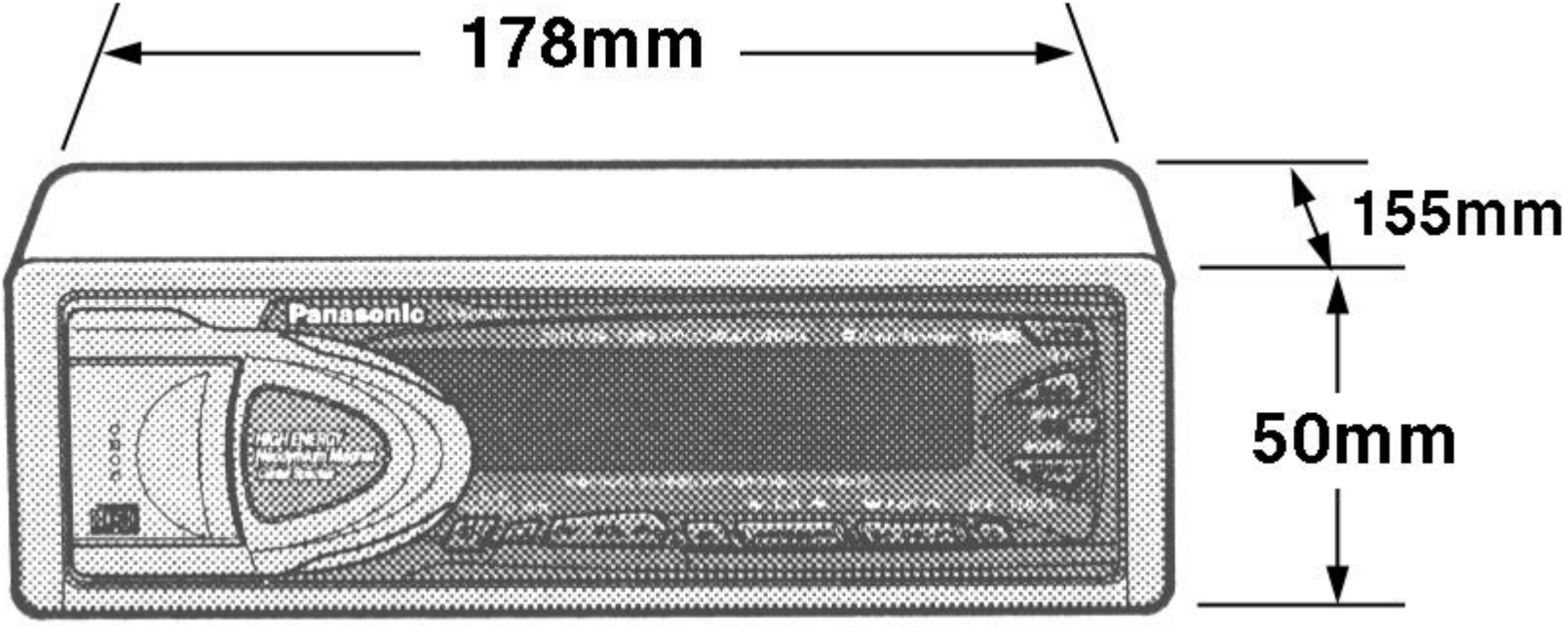
178mm
155mm
50mm
Panasonic

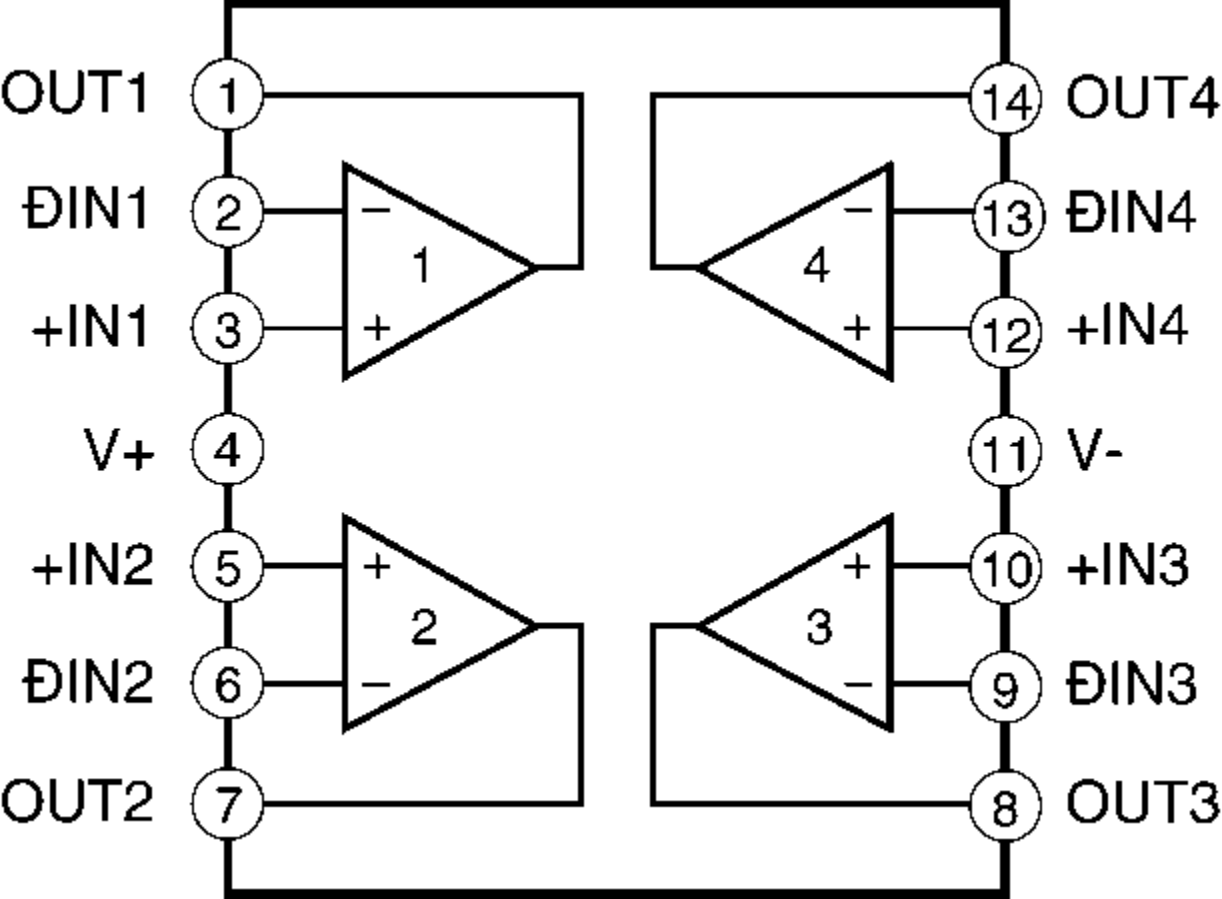
OUT1
1
ÐIN1
2
+IN1
3
V+
4
+IN2
5
ÐIN2
6
OUT2
7
14
OUT4
13
ÐIN4
12
+IN4
11
V-
10
+IN3
9
ÐIN3
8
OUT3
1
2
3
4

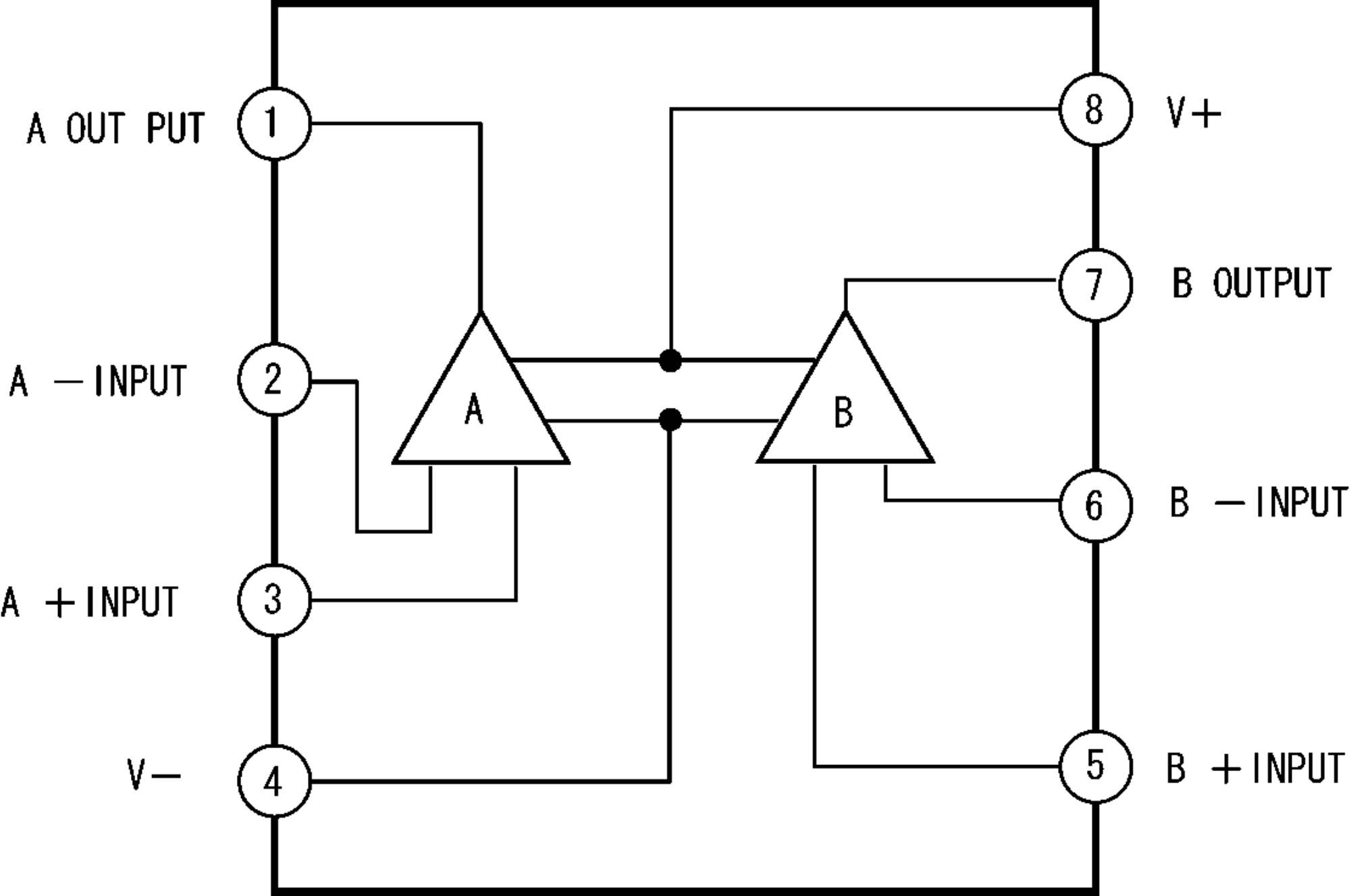
A OUT PUT
1
A −INPUT
2
A +INPUT
3
V−
4
8
V+
7
B OUTPUT
6
B −INPUT
5
B +INPUT
A
B

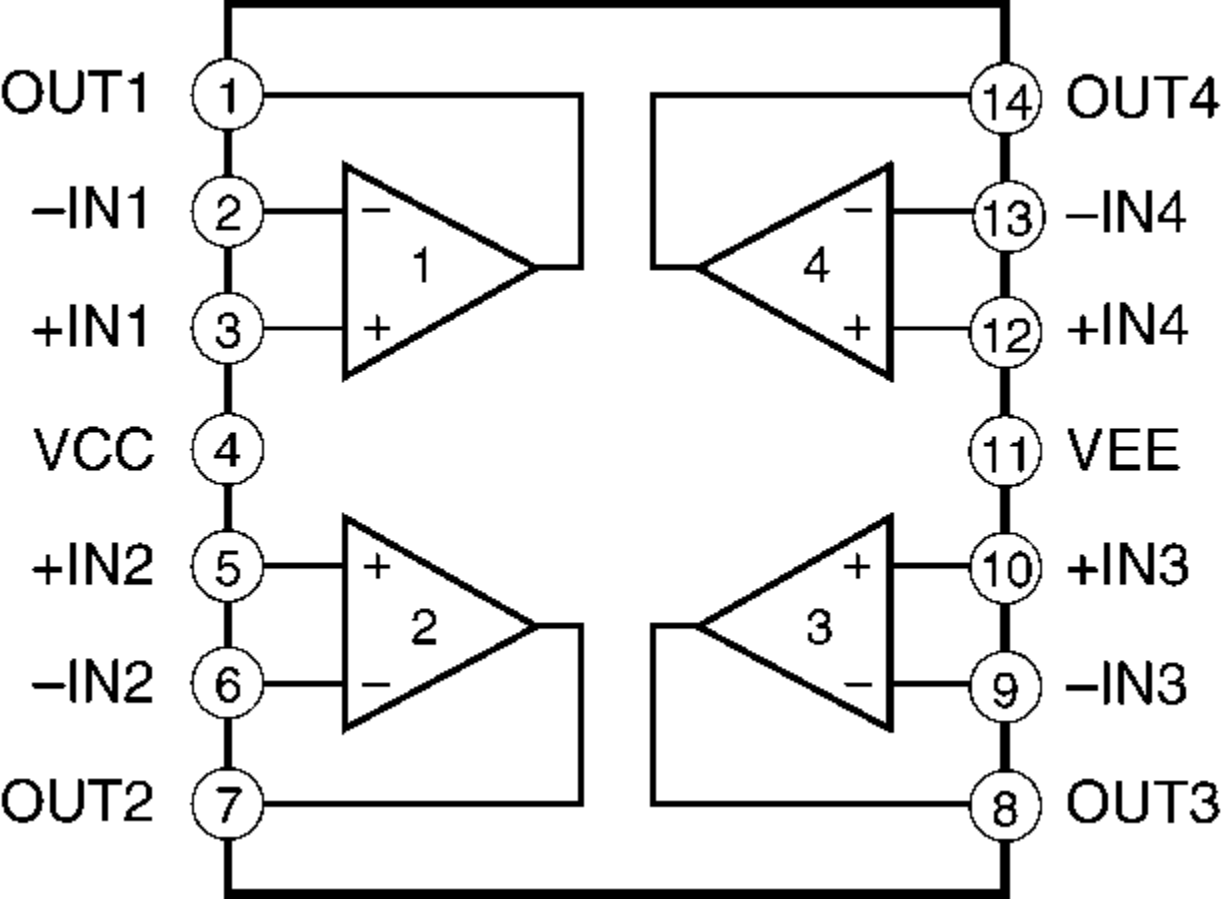
OUT1
1
–IN1
2
+IN1
3
VCC
4
+IN2
5
–IN2
6
OUT2
7
14
OUT4
13
–IN4
12
+IN4
11
VEE
10
+IN3
9
–IN3
8
OUT3
1
2
3
4

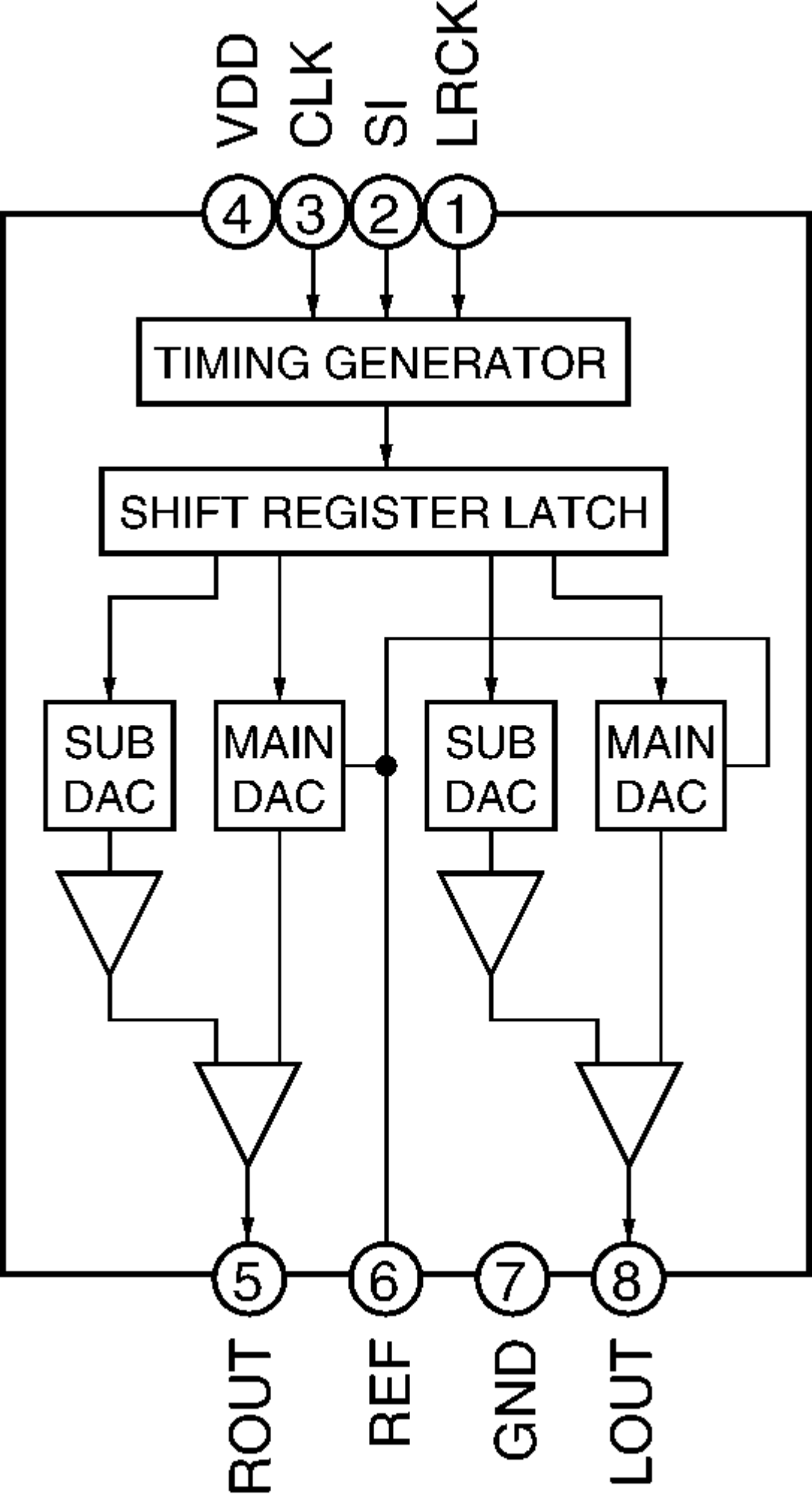
VDD
CLK
SI
LRCK
4
3
2
1
TIMING GENERATOR
SHIFT REGISTER LATCH
SUB DAC
MAIN DAC
SUB DAC
MAIN DAC
5
6
7
8
ROUT
REF
GND
LOUT

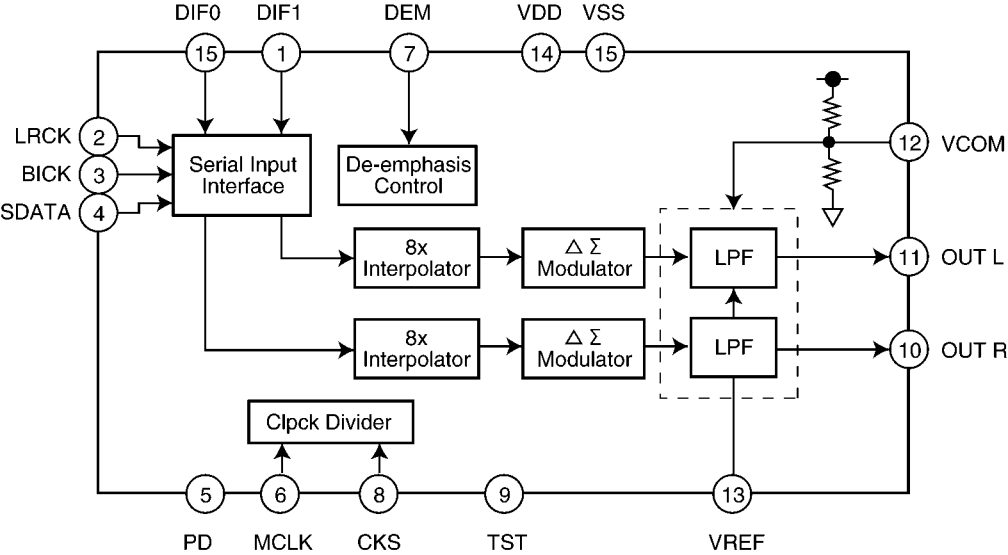
DIF0
DIF1
DEM
VDD
VSS
15
1
7
14
15
LRCK
BICK
SDATA
2
3
4
Serial Input Interface
De-emphasis Control
12
VCOM
8x Interpolator
Δ Σ Modulator
LPF
11
OUT L
8x Interpolator
Δ Σ Modulator
LPF
10
OUT R
Clpck Divider
5
6
8
9
13
PD
MCLK
CKS
TST
VREF

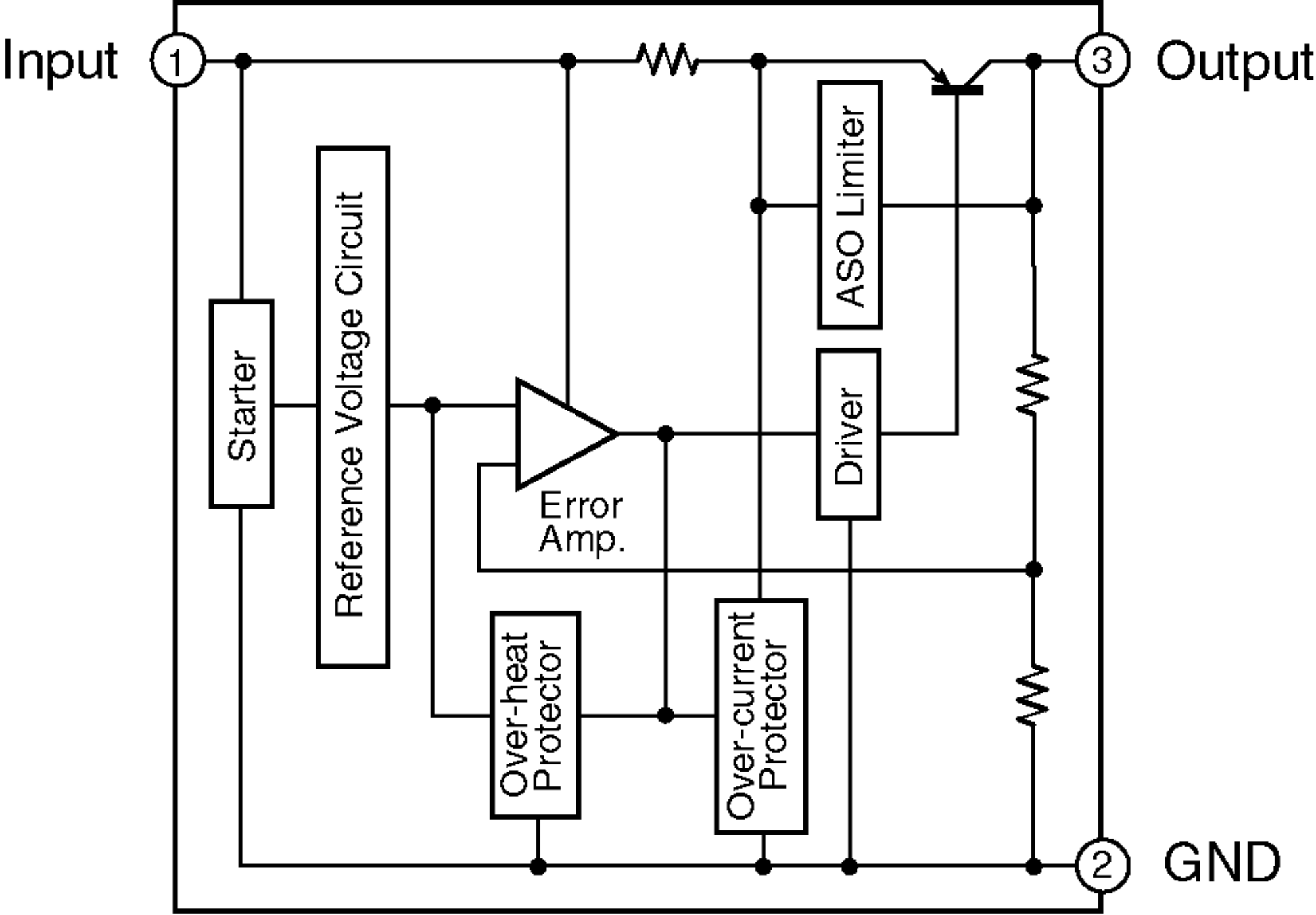
Input
1
Output
3
GND
2
Starter
Reference Voltage Circuit
Error
Amp.
ASO Limiter
Driver
Over-heat
Protector
Over-current
Protector

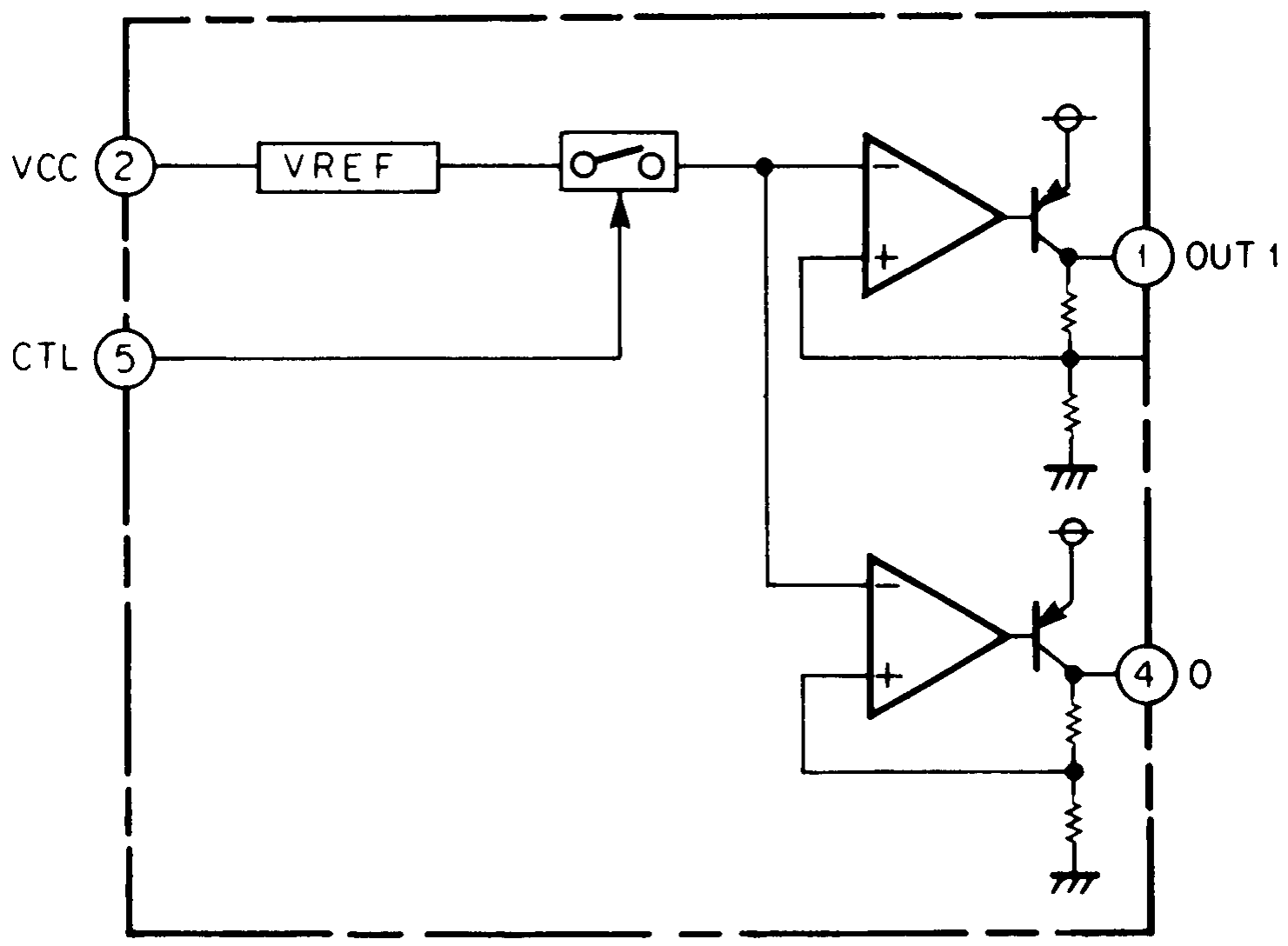
VCC
2
VREF
CTL
5
1
OUT 1
4
O

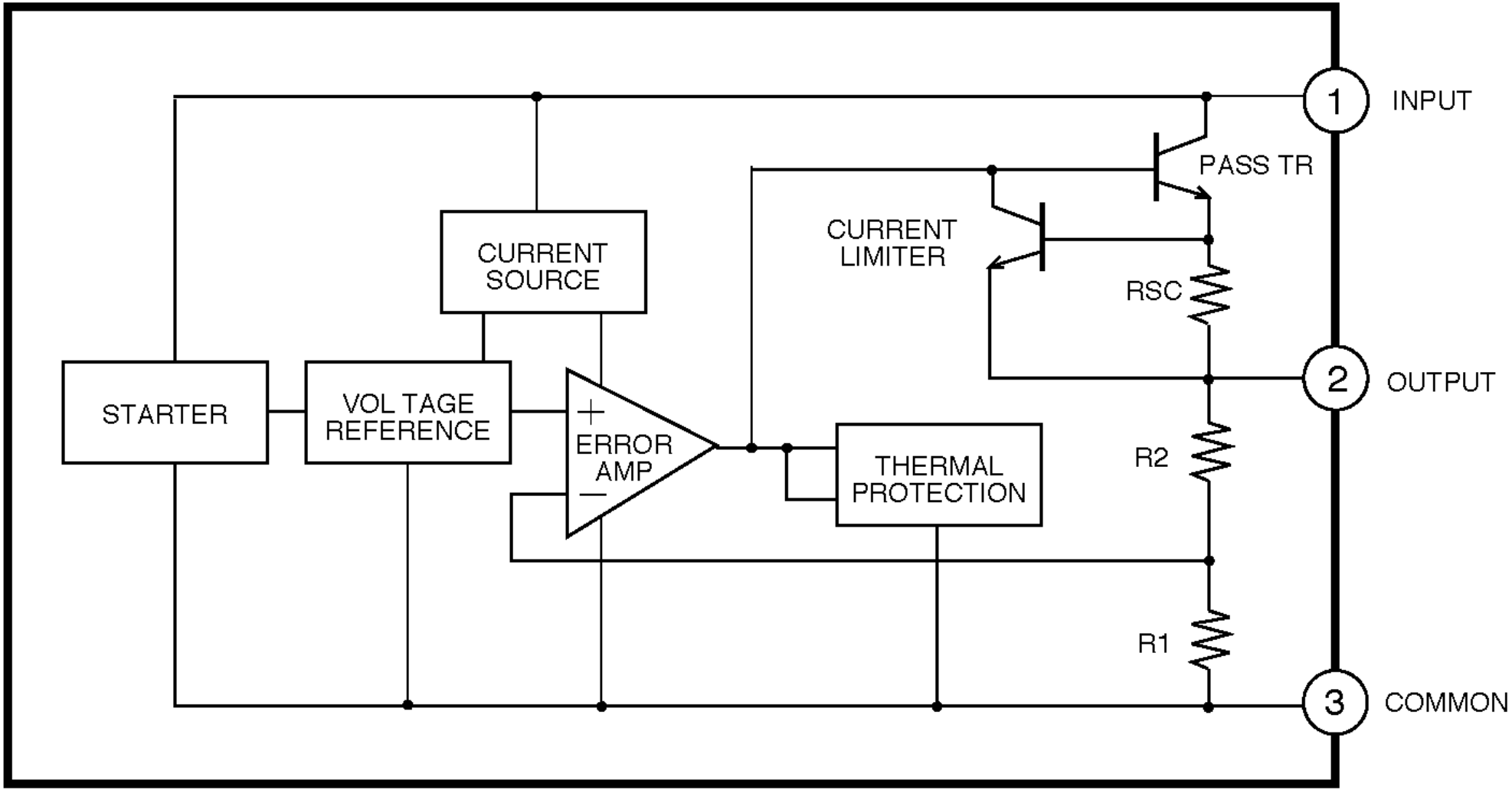
1
INPUT
PASS TR
CURRENT
LIMITER
CURRENT
SOURCE
RSC
2
OUTPUT
STARTER
VOL TAGE
REFERENCE
+
ERROR
AMP
−
THERMAL
PROTECTION
R2
R1
3
COMMON

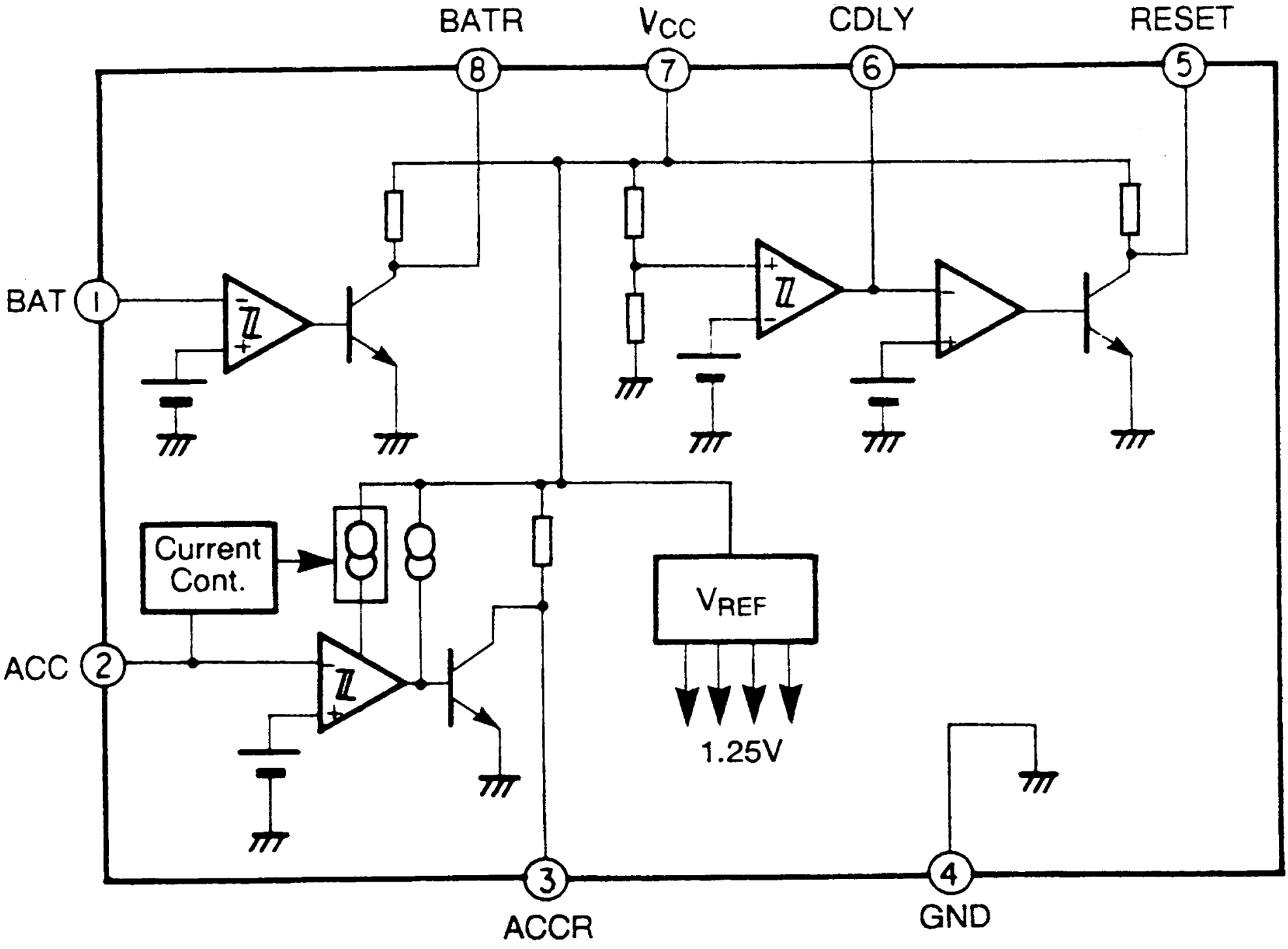
BATR
VCC
CDLY
RESET
8
7
6
5
BAT
1
Current Cont.
VREF
ACC
2
1.25V
3
ACCR
4
GND

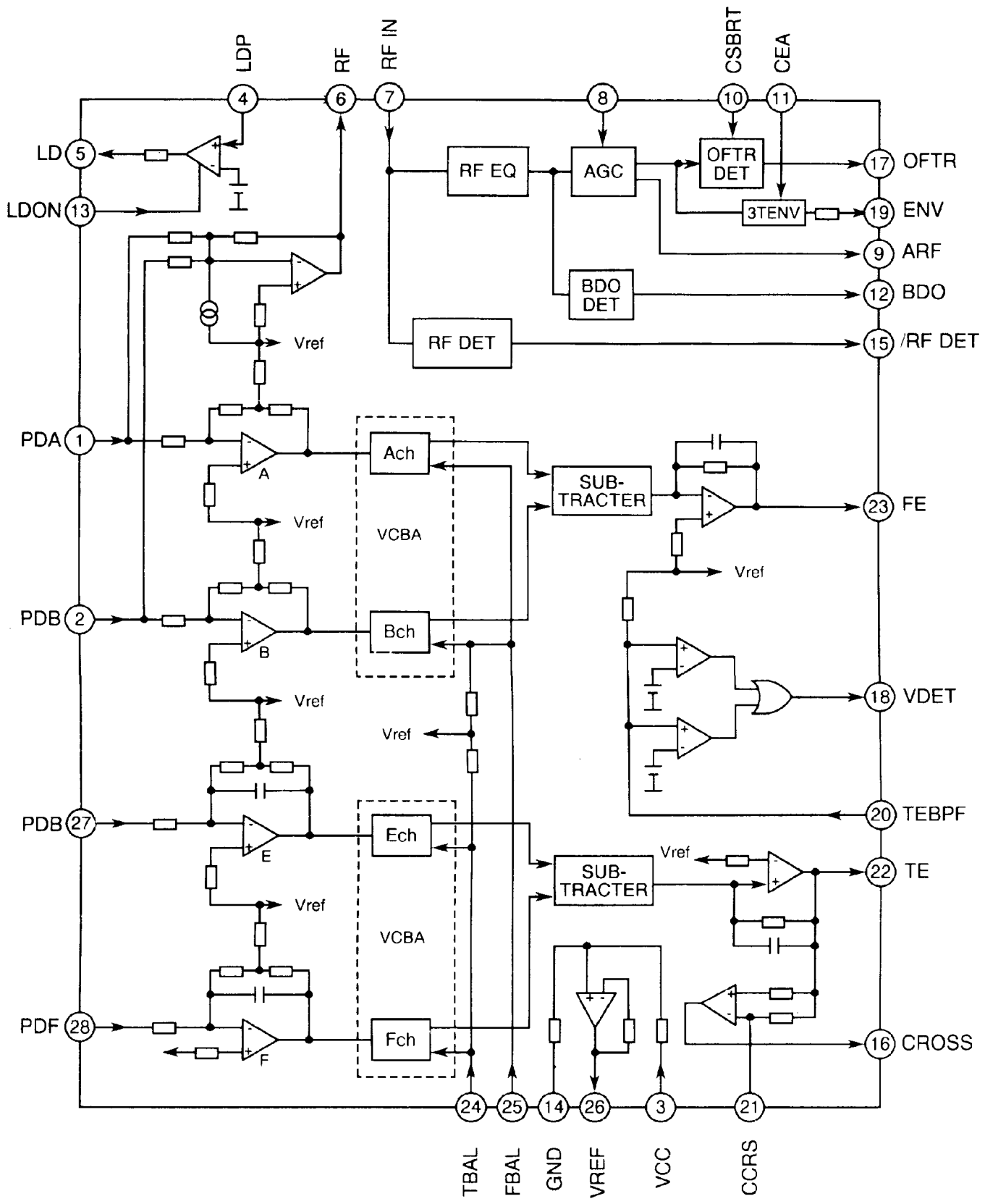
LDP
RF
RF IN
CSBRT
CEA
LD
LDON
RF EQ
AGC
OFTR DET
3TENV
BDO DET
RF DET
OFTR
ENV
ARF
BDO
/RF DET
Vref
PDA
PDB
PDB
PDF
A
B
E
F
Ach
Bch
Ech
Fch
VCBA
VCBA
SUB-TRACTER
SUB-TRACTER
FE
VDET
TEBPF
TE
CROSS
TBAL
FBAL
GND
VREF
VCC
CCRS

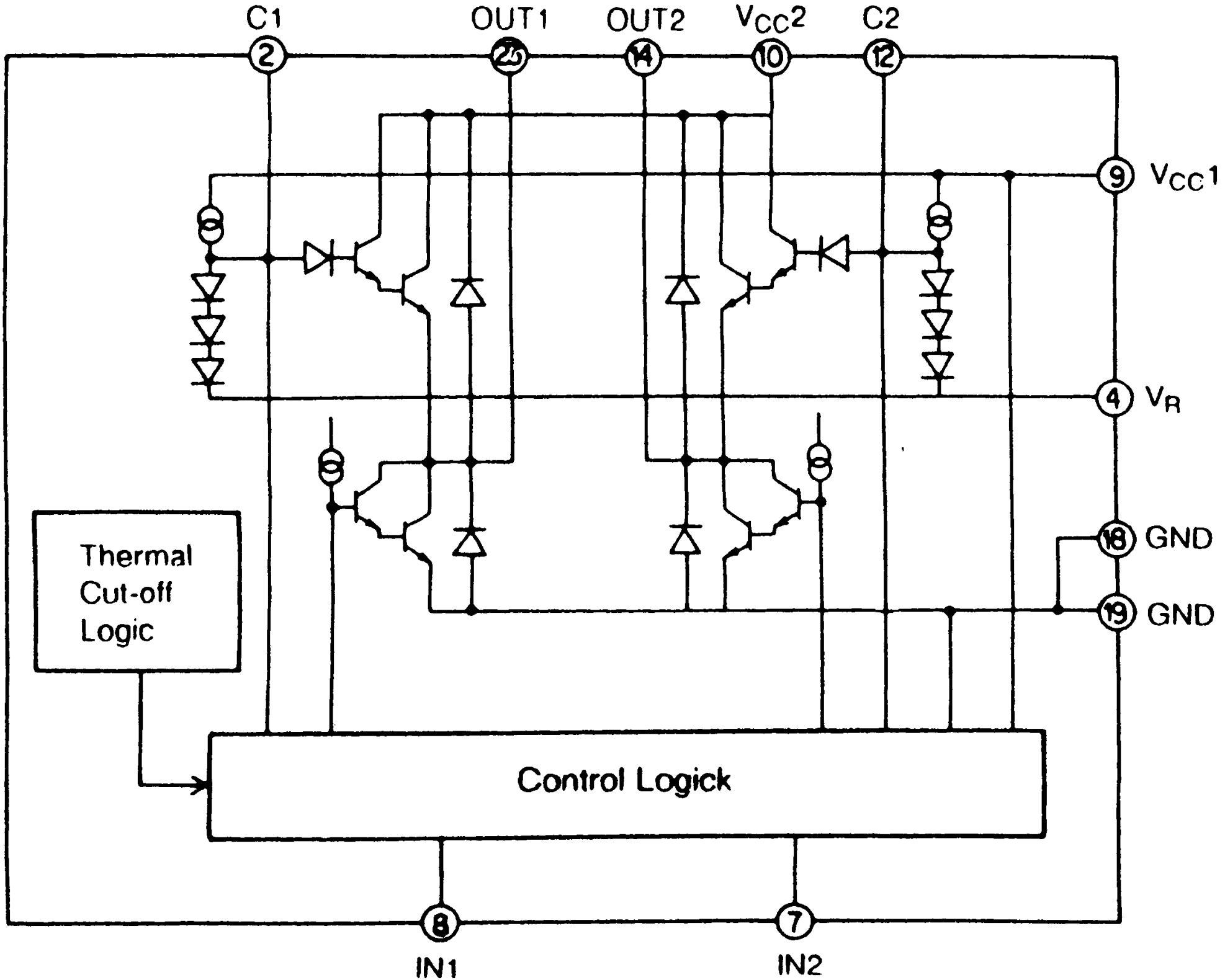
C1
OUT1
OUT2
VCC2
C2
2
26
14
10
12
9
VCC1
4
VR
18
GND
19
GND
Thermal
Cut-off
Logic
Control Logick
8
7
IN1
IN2

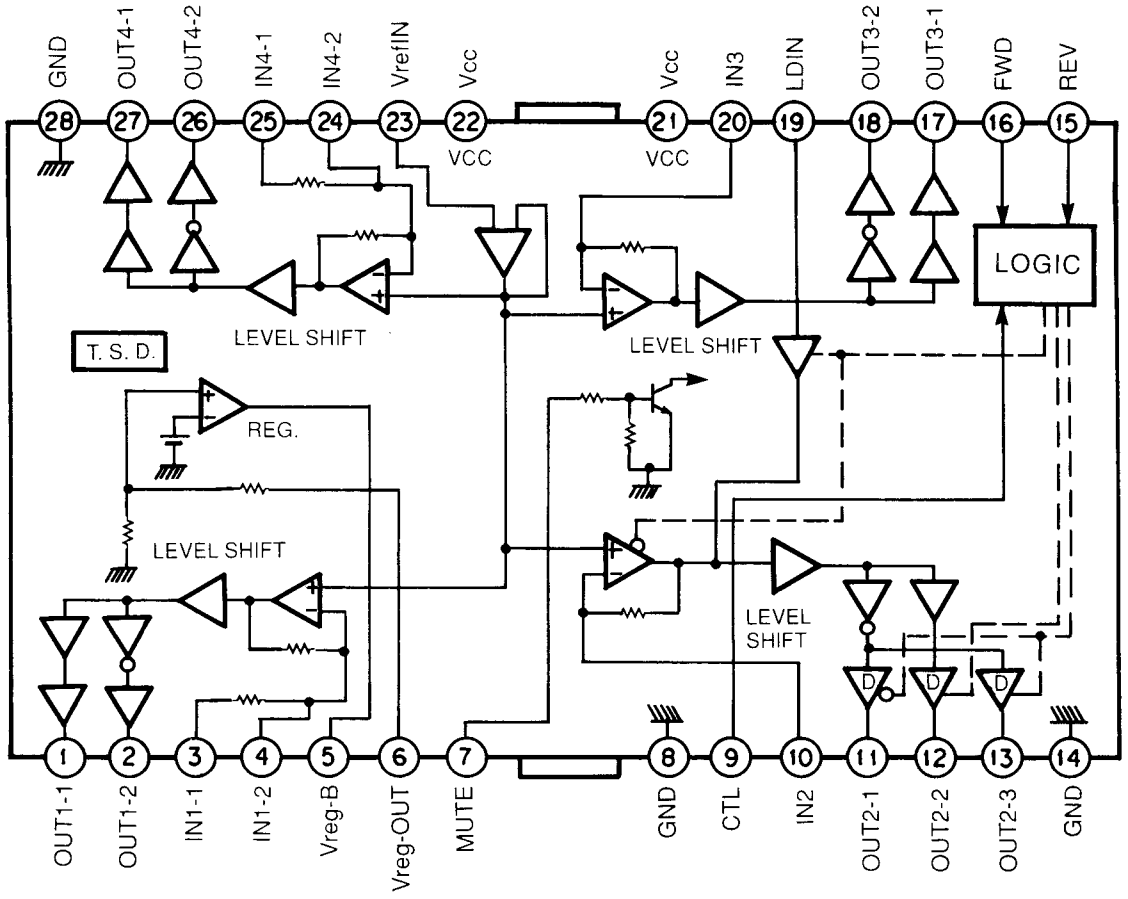
GND
OUT4-1
OUT4-2
IN4-1
IN4-2
VrefIN
Vcc
Vcc
IN3
LDIN
OUT3-2
OUT3-1
FWD
REV
28
27
26
25
24
23
22
21
20
19
18
17
16
15
VCC
VCC
LOGIC
LEVEL SHIFT
LEVEL SHIFT
T. S. D.
REG.
LEVEL SHIFT
LEVEL SHIFT
D
D
D
1
2
3
4
5
6
7
8
9
10
11
12
13
14
OUT1-1
OUT1-2
IN1-1
IN1-2
Vreg-B
Vreg-OUT
MUTE
GND
CTL
IN2
OUT2-1
OUT2-2
OUT2-3
GND

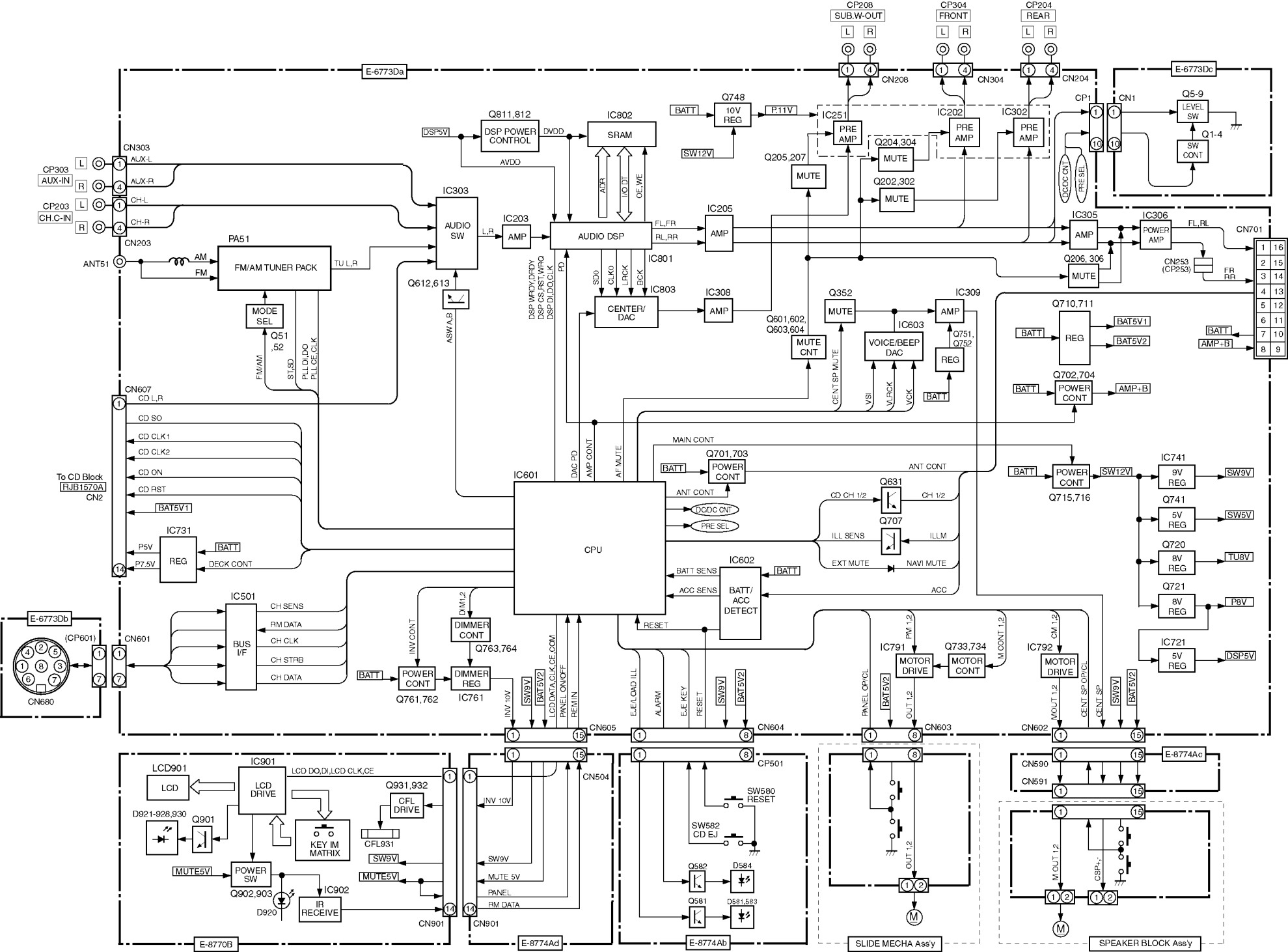
E-6773Da
CP208
SUB.W-OUT
CP304
FRONT
CP204
REAR
CN208
CN304
CN204
E-6773Dc
CP1
CN1
Q5-9
LEVEL SW
Q1-4
SW CONT
Q748
10V REG
P.11V
BATT
SW12V
Q811,812
DSP POWER CONTROL
DSP5V
DVDD
IC802
SRAM
AVDD
IC251
PRE AMP
IC202
PRE AMP
IC302
PRE AMP
Q204,304
MUTE
Q205,207
MUTE
Q202,302
MUTE
DC/DC CNT
PRE SEL
CN303
AUX-L
AUX-R
CP303
AUX-IN
CH-L
CH-R
CP203
CH.C-IN
CN203
ANT51
AM
FM
PA51
FM/AM TUNER PACK
TU L,R
IC303
AUDIO SW
L,R
IC203
AMP
AUDIO DSP
IC801
FL,FR
RL,RR
IC205
AMP
IC305
AMP
IC306
POWER AMP
FL,RL
CN701
CN253 (CP253)
FR
RR
Q206, 306
MUTE
Q612,613
ASW A,B
MODE SEL
Q51 ,52
FM/AM
ST,SD
PLL DI,DO
PLL CE,CLK
DSP WRDY,DRDY
DSP CS,RST,WRQ
DSP DI,DO,CLK
PD
SDO
CLKO
LRCK
BCK
IC803
CENTER/ DAC
IC308
AMP
Q601,602, Q603,604
MUTE CNT
Q352
MUTE
IC603
VOICE/BEEP DAC
IC309
AMP
Q751, Q752
REG
CENT SP MUTE
VSI
VLRCK
VCK
Q710,711
REG
BAT5V1
BAT5V2
AMP+B
Q702,704
POWER CONT
CN607
CD L,R
CD SO
CD CLK1
CD CLK2
CD ON
CD RST
BAT5V1
To CD Block
RJB1570A
CN2
IC731
REG
P5V
P7.5V
DECK CONT
IC601
CPU
DAC PD
AMP CONT
AF MUTE
MAIN CONT
Q701,703
POWER CONT
ANT CONT
DC/DC CNT
PRE SEL
Q631
CD CH 1/2
CH 1/2
Q707
ILL SENS
ILLM
EXT MUTE
NAVI MUTE
IC602
BATT/ ACC DETECT
BATT SENS
ACC SENS
ACC
RESET
Q715,716
POWER CONT
SW12V
IC741
9V REG
SW9V
Q741
5V REG
SW5V
Q720
8V REG
TU8V
Q721
8V REG
P8V
IC721
5V REG
DSP5V
E-6773Db
(CP601)
CN680
CN601
IC501
BUS I/F
CH SENS
RM DATA
CH CLK
CH STRB
CH DATA
INV CONT
DIM1,2
DIMMER CONT
Q763,764
POWER CONT
Q761,762
DIMMER REG
IC761
INV 10V
SW9V
BAT5V2
LCD DATA,CLK,CE,COM
PANEL ON/OFF
REM IN
EJE/LOAD ILL
AL.ARM
EJE KEY
RESET
PANEL OP/CL
OUT 1,2
PM 1,2
M CONT 1,2
IC791
MOTOR DRIVE
Q733,734
MOTOR CONT
IC792
MOTOR DRIVE
CM 1,2
MOUT 1,2
CENT SP OP/CL
CENT SP
CN605
CN604
CN603
CN602
LCD901
LCD
IC901
LCD DRIVE
LCD DO,DI,LCD CLK,CE
Q931,932
CFL DRIVE
CFL931
D921-928,930
Q901
KEY IM MATRIX
MUTE5V
POWER SW
Q902,903
D920
IC902
IR RECEIVE
CN901
E-8770B
CN504
INV 10V
SW9V
MUTE 5V
PANEL
RM DATA
CN901
E-8774Ad
CP501
SW580 RESET
SW582 CD EJ
Q582
D584
Q581
D581,583
E-8774Ab
OUT 1,2
SLIDE MECHA Ass'y
CN590
CN591
E-8774Ac
M OUT 1,2
CSP+,-
SPEAKER BLOCK Ass'y

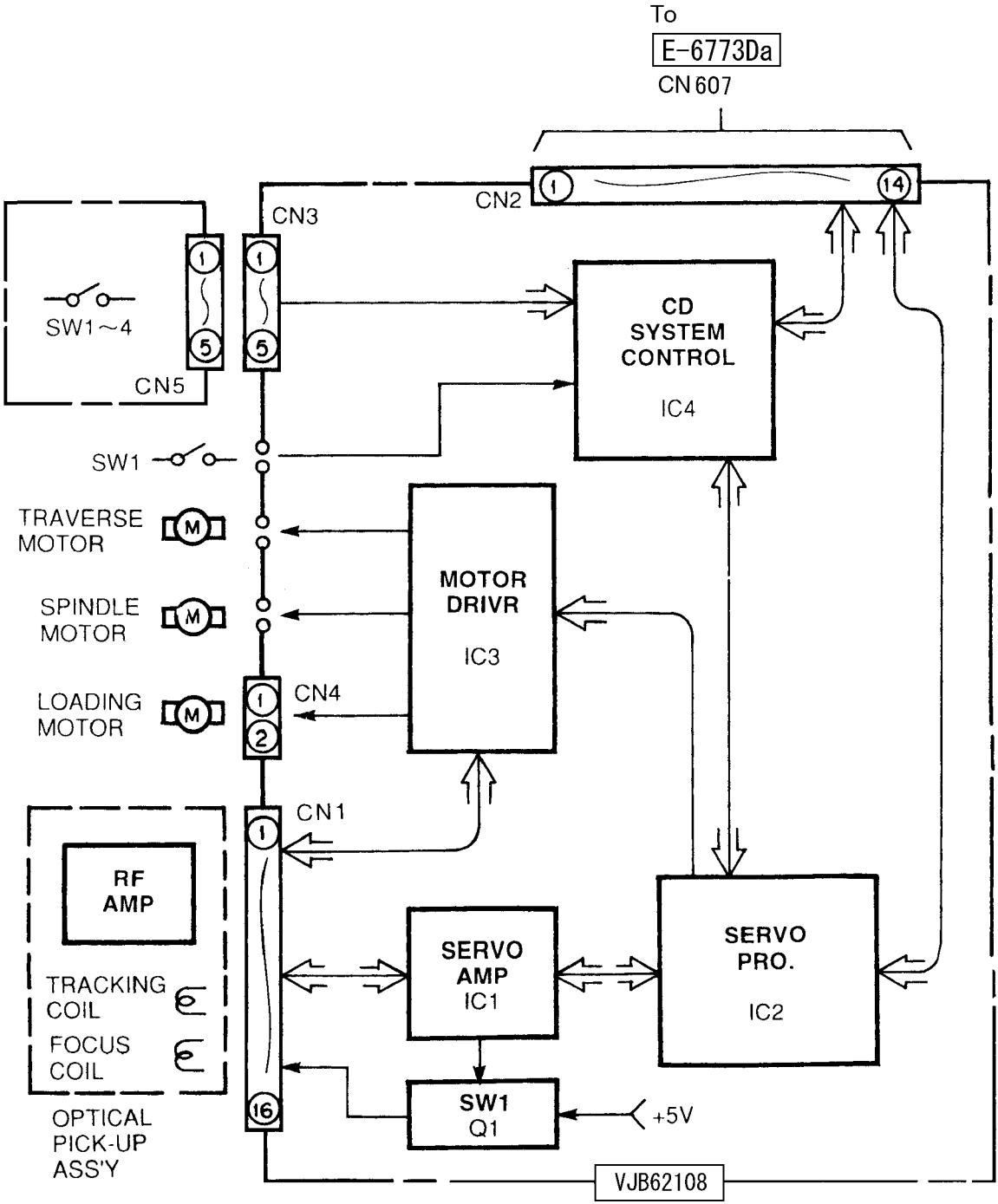
To
E-6773Da
CN607
CN2
CN3
SW1~4
CN5
CD SYSTEM CONTROL
IC4
SW1
TRAVERSE MOTOR
SPINDLE MOTOR
LOADING MOTOR
MOTOR DRIVR
IC3
CN4
CN1
RF AMP
TRACKING COIL
FOCUS COIL
OPTICAL PICK-UP ASS'Y
SERVO AMP
IC1
SERVO PRO.
IC2
SW1
Q1
+5V
VJB62108

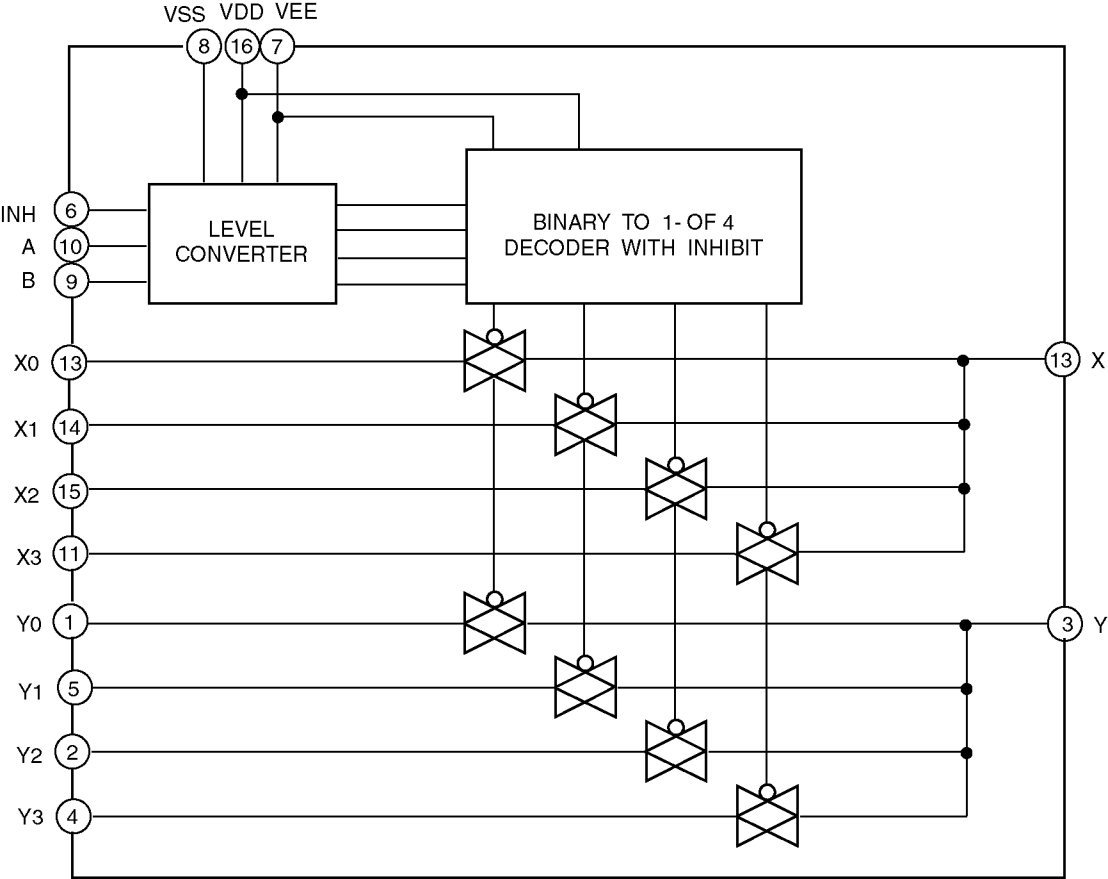
VSS
VDD
VEE
8
16
7
INH
6
A
10
B
9
LEVEL CONVERTER
BINARY TO 1-OF 4 DECODER WITH INHIBIT
X0
13
X1
14
X2
15
X3
11
Y0
1
Y1
5
Y2
2
Y3
4
13
X
3
Y

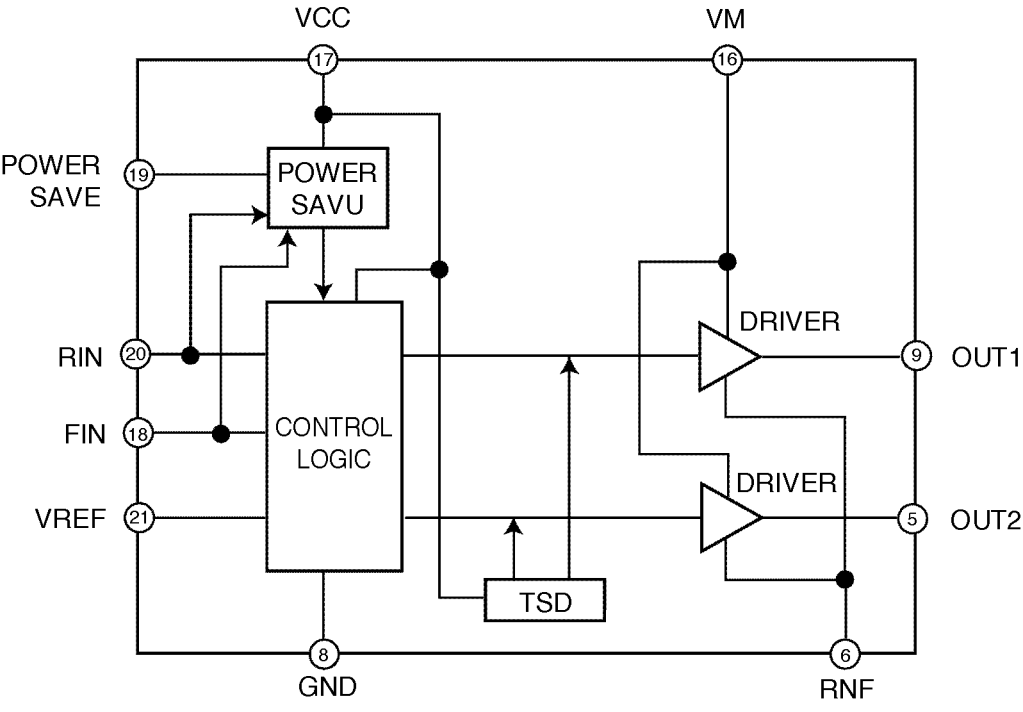
VCC
VM
17
16
POWER
SAVE
19
POWER
SAVU
RIN
20
FIN
18
VREF
21
CONTROL
LOGIC
DRIVER
DRIVER
9
OUT1
5
OUT2
TSD
8
GND
6
RNF

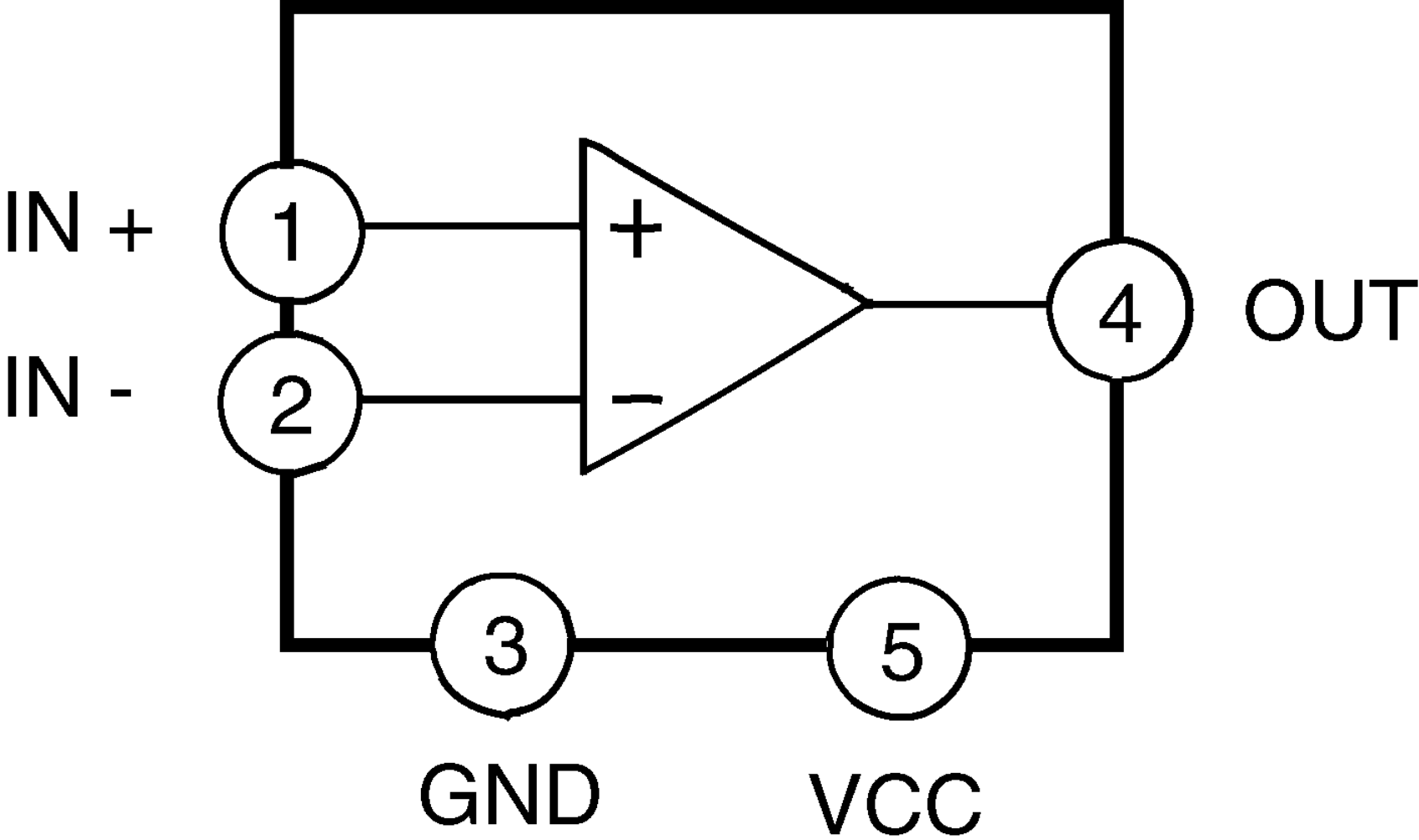
IN +
1
IN -
2
+
−
4
OUT
3
5
GND
VCC

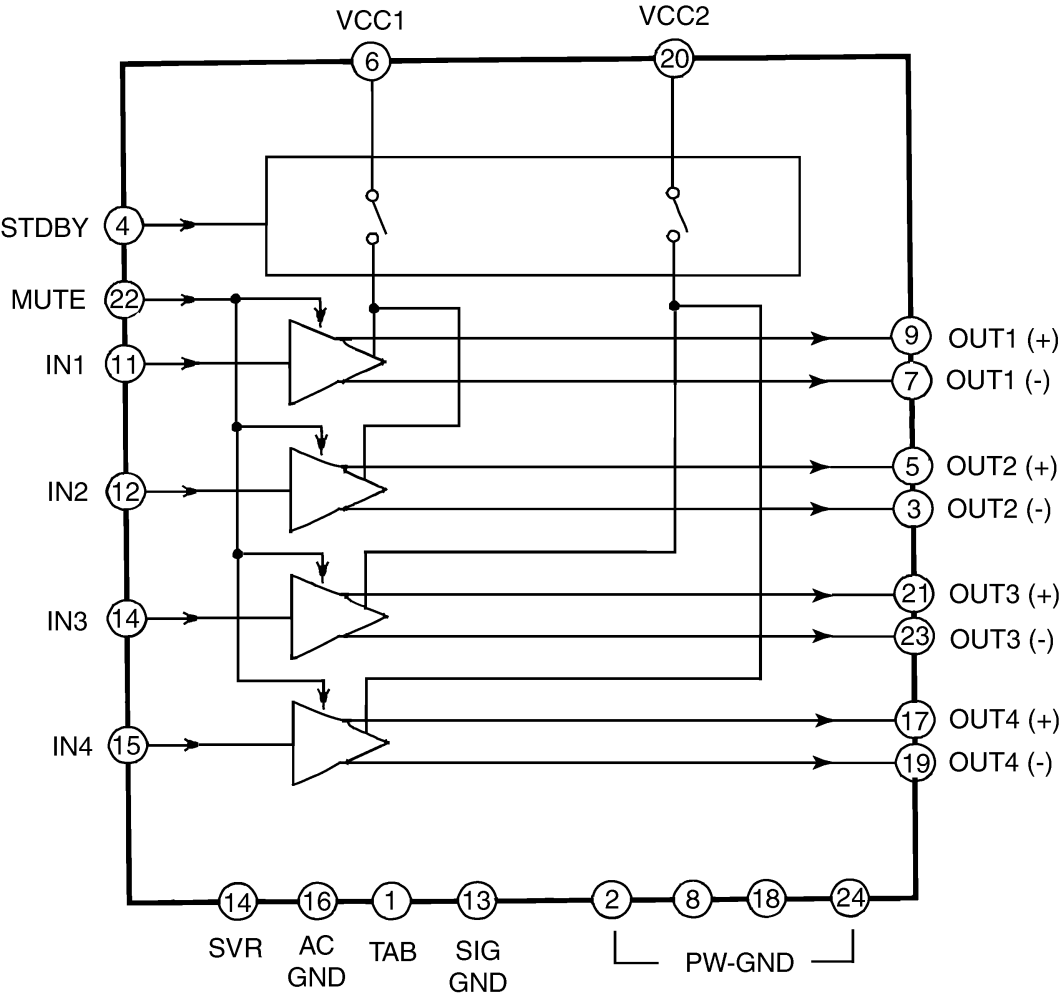
VCC1
6
VCC2
20
STDBY
4
MUTE
22
IN1
11
IN2
12
IN3
14
IN4
15
9
OUT1 (+)
7
OUT1 (-)
5
OUT2 (+)
3
OUT2 (-)
21
OUT3 (+)
23
OUT3 (-)
17
OUT4 (+)
19
OUT4 (-)
14
SVR
16
AC GND
1
TAB
13
SIG GND
2
8
18
24
PW-GND

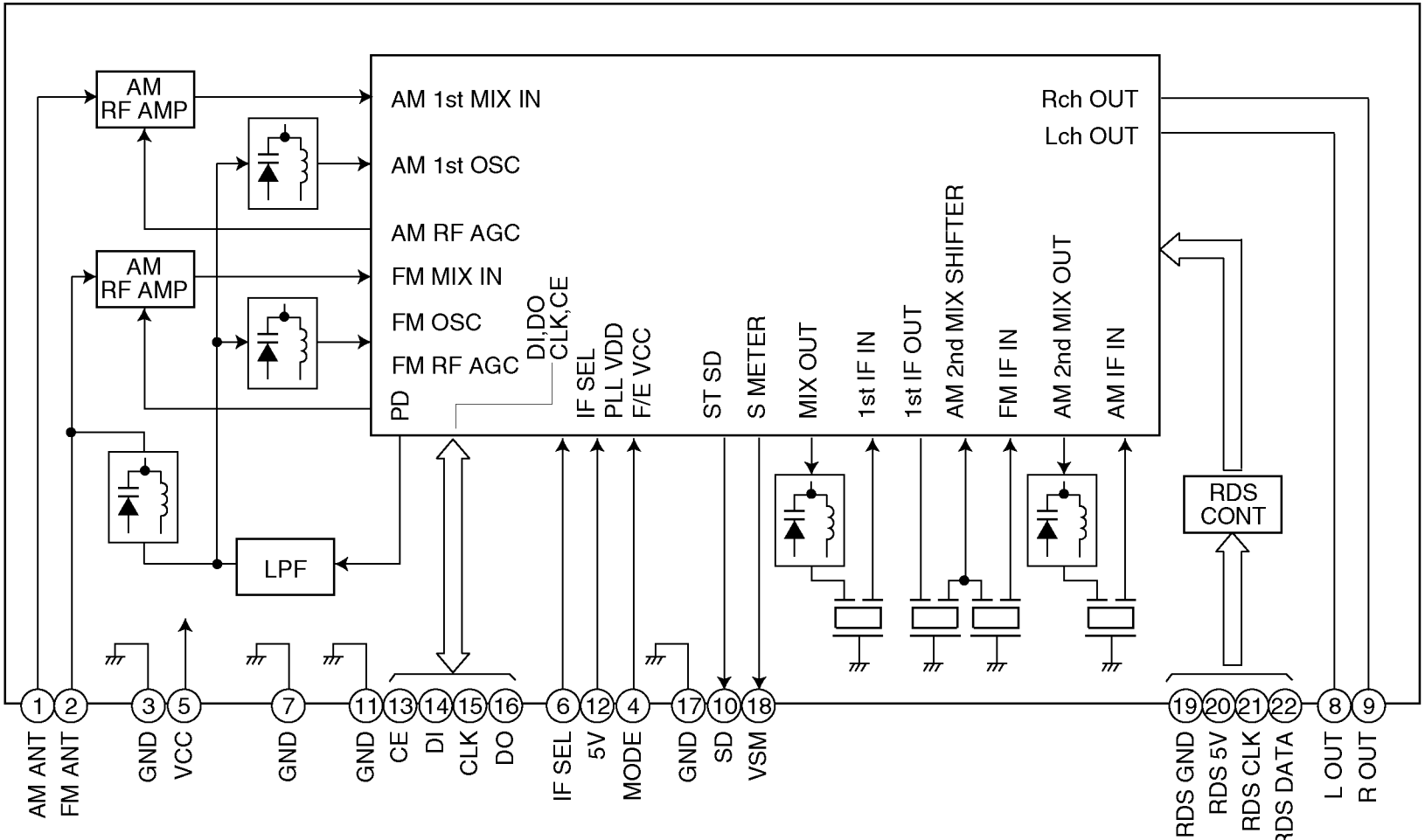
AM RF AMP
AM RF AMP
LPF
AM 1st MIX IN
AM 1st OSC
AM RF AGC
FM MIX IN
FM OSC
FM RF AGC
PD
DI,DO
CLK,CE
IF SEL
PLL VDD
F/E VCC
ST SD
S METER
MIX OUT
1st IF IN
1st IF OUT
AM 2nd MIX SHIFTER
FM IF IN
AM 2nd MIX OUT
AM IF IN
Rch OUT
Lch OUT
RDS CONT
1 AM ANT
2 FM ANT
3 GND
5 VCC
7 GND
11 GND
13 CE
14 DI
15 CLK
16 DO
6 IF SEL
12 5V
4 MODE
17 GND
10 SD
18 VSM
19 RDS GND
20 RDS 5V
21 RDS CLK
22 RDS DATA
8 L OUT
9 R OUT

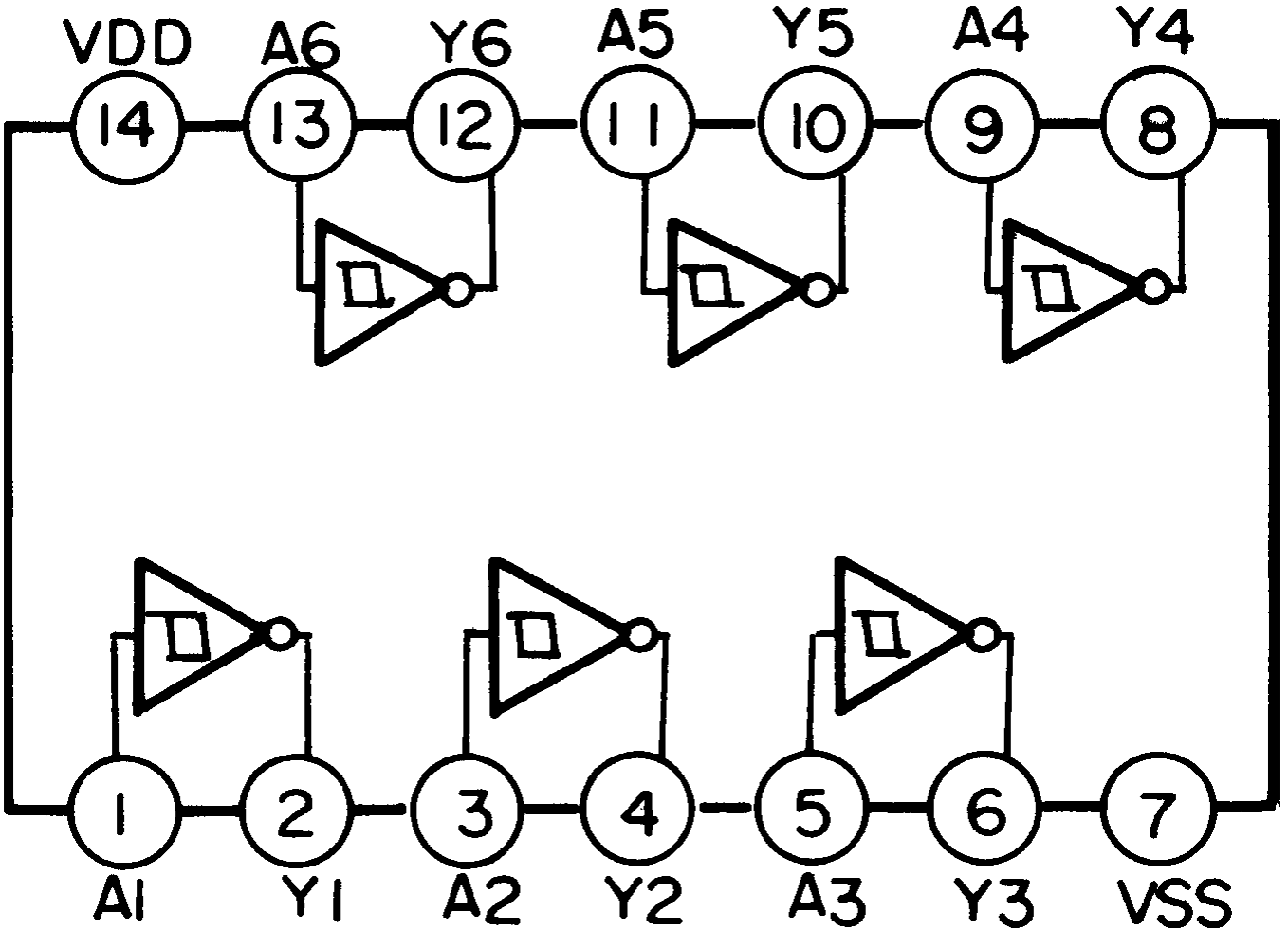
VDD
A6
Y6
A5
Y5
A4
Y4
14
13
12
11
10
9
8
1
2
3
4
5
6
7
A1
Y1
A2
Y2
A3
Y3
VSS

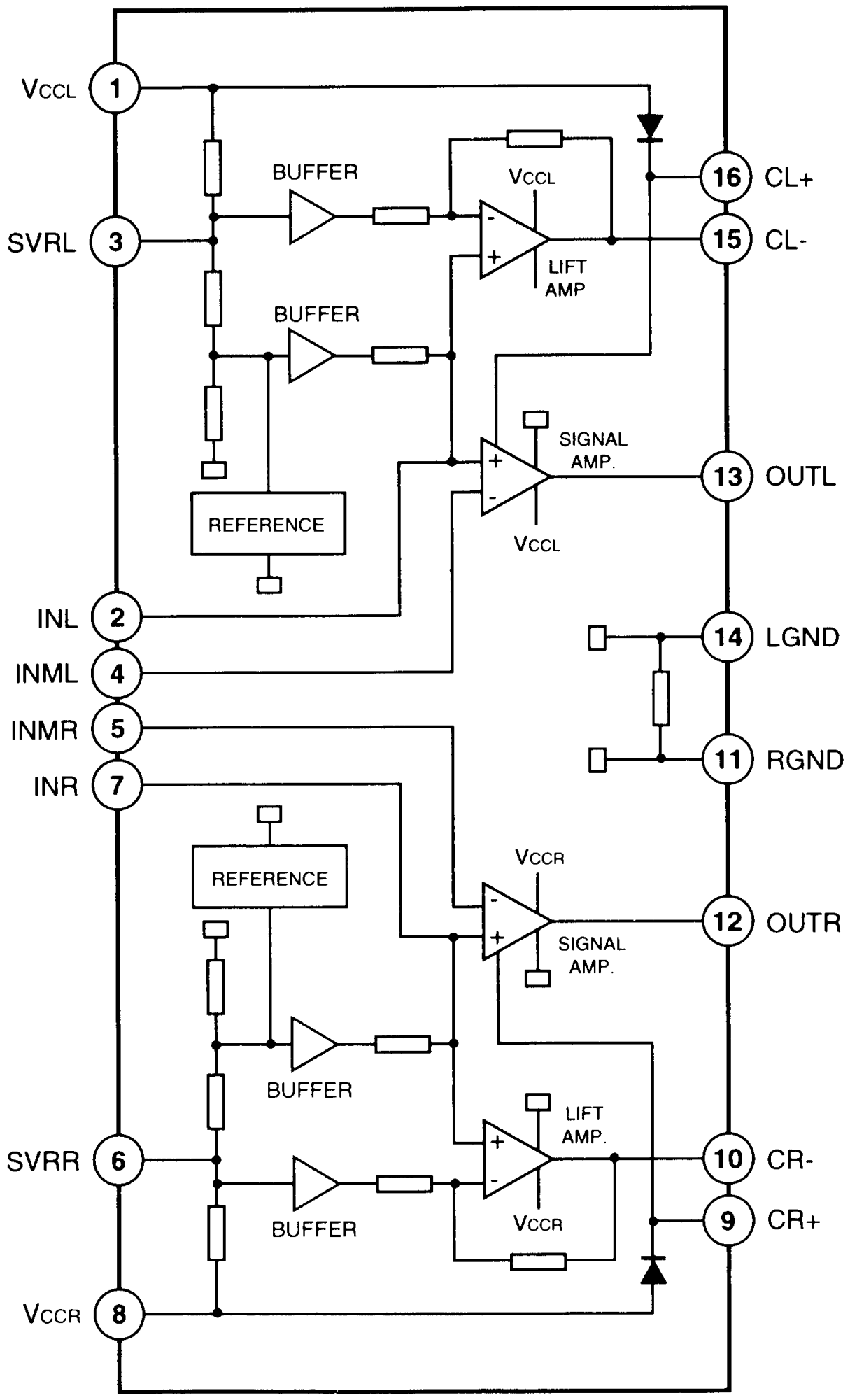
VCCL
1
SVRL
3
INL
2
INML
4
INMR
5
INR
7
SVRR
6
VCCR
8
BUFFER
BUFFER
VCCL
LIFT AMP
SIGNAL AMP.
VCCL
REFERENCE
16
CL+
15
CL-
13
OUTL
14
LGND
11
RGND
REFERENCE
VCCR
SIGNAL AMP.
12
OUTR
BUFFER
LIFT AMP.
BUFFER
VCCR
10
CR-
9
CR+

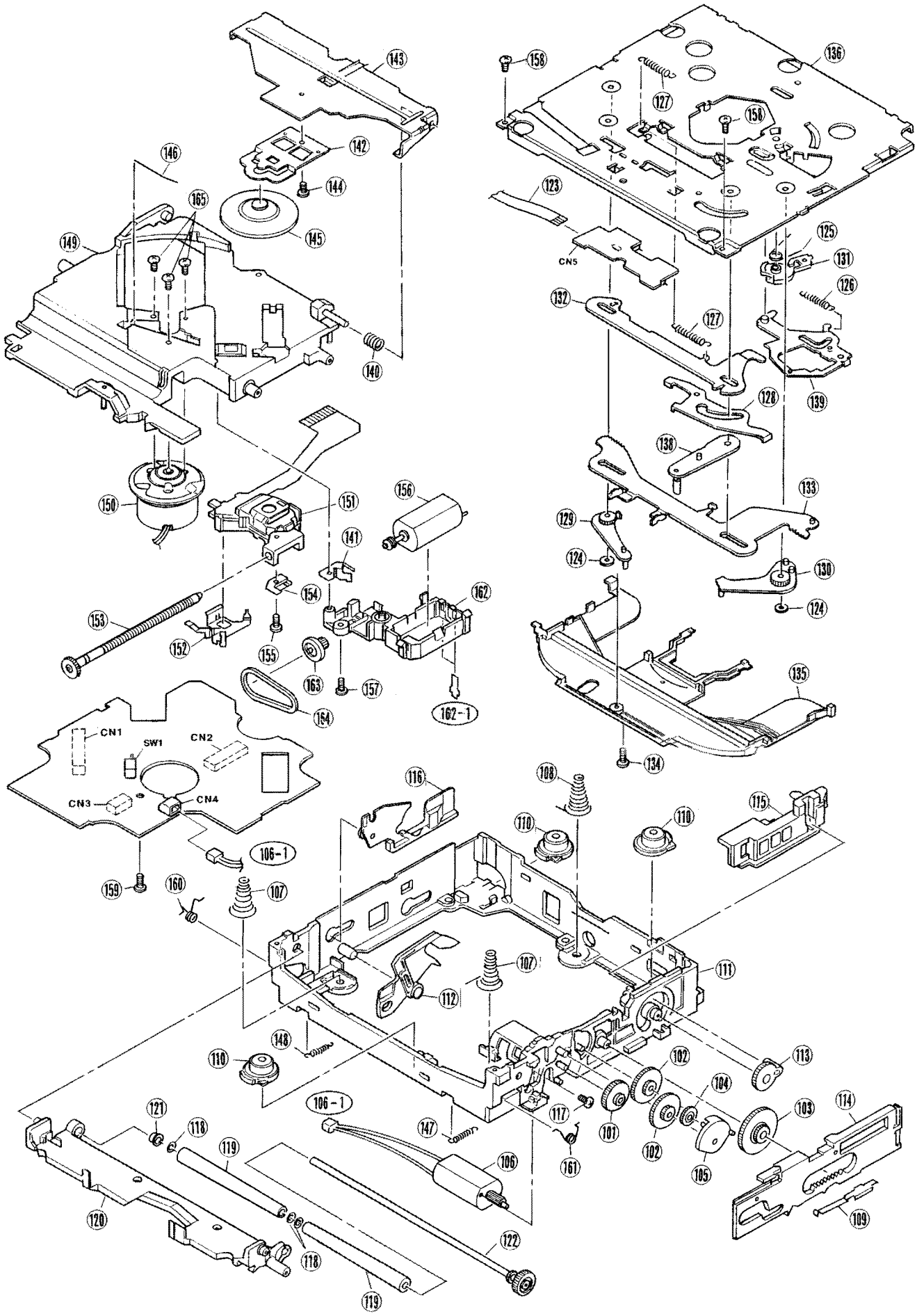

RAJ2712
'00.09.28

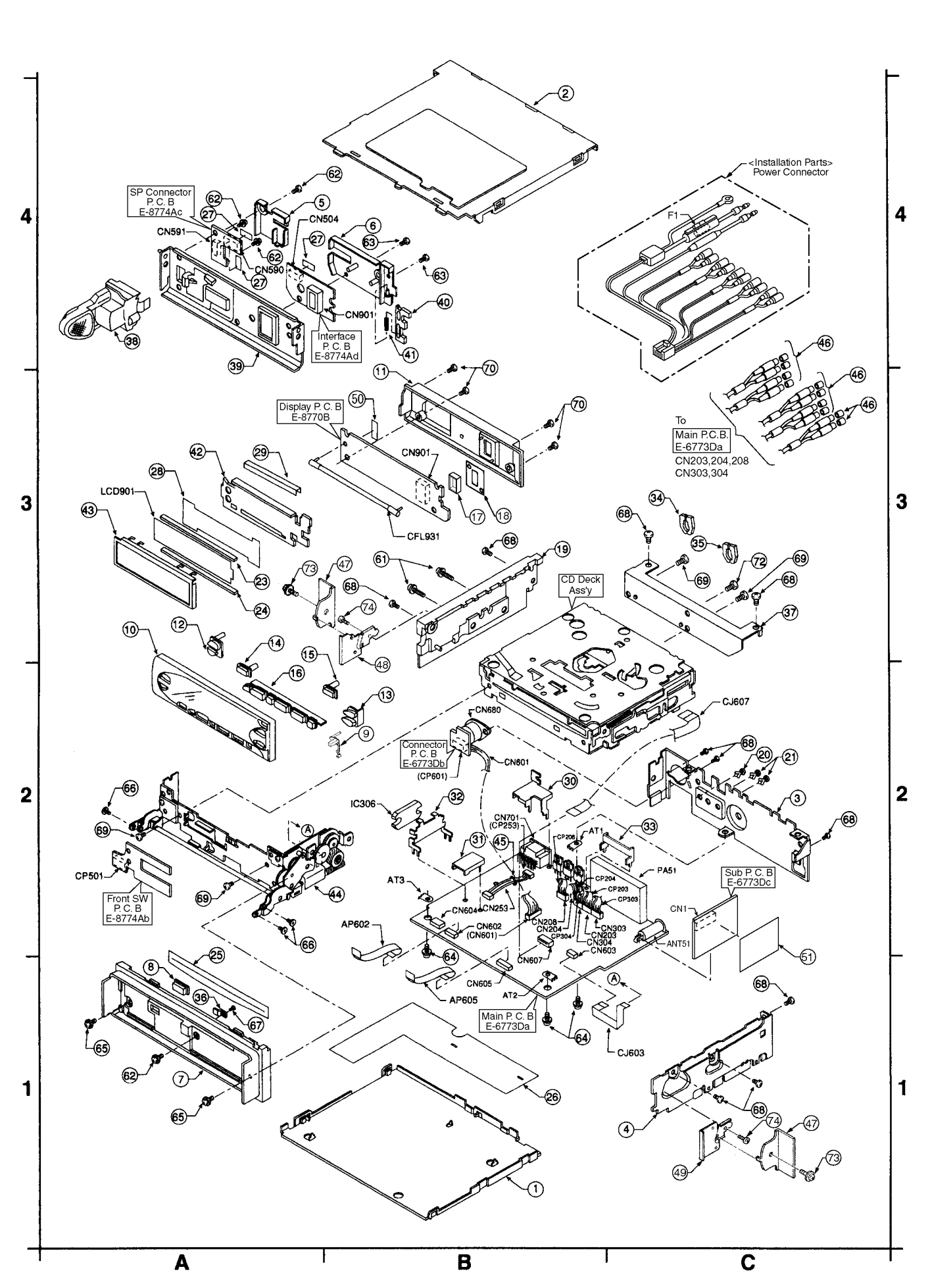
SP Connector P. C. B E-8774Ac
CN591
CN590
CN504
CN901
Interface P. C. B E-8774Ad
<Installation Parts>
Power Connector
F1
To Main P.C.B. E-6773Da
CN203,204,208
CN303,304
Display P. C. B E-8770B
CN901
CFL931
LCD901
CD Deck Ass'y
CJ607
CN680
Connector P. C. B E-6773Db
(CP601)
CN601
IC306
CN701
(CP253)
AT1
CP206
PA51
CP204
CP203
CP303
AT3
CN604
CN253
CN602
(CN601)
AP602
CN208
CN204
CP304
CN303
CN203
CN304
CN603
CN607
ANT51
Sub P. C. B E-6773Dc
CN1
CP501
Front SW P. C. B E-8774Ab
CN605
AP605
AT2
Main P. C. B E-6773Da
CJ603
A
B
C
1
2
3
4

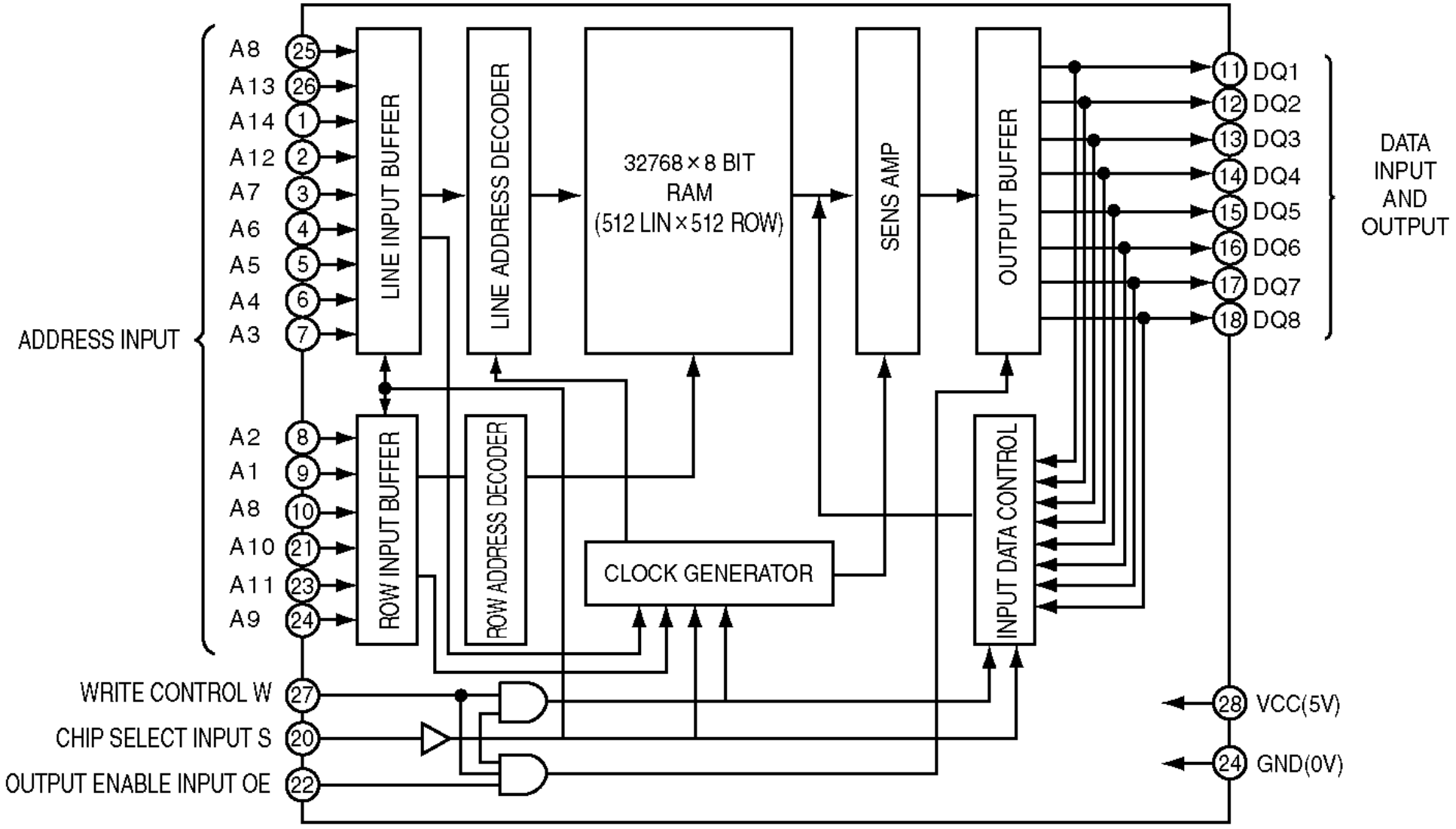
ADDRESS INPUT
A8
A13
A14
A12
A7
A6
A5
A4
A3
A2
A1
A8
A10
A11
A9
25
26
1
2
3
4
5
6
7
8
9
10
21
23
24
LINE INPUT BUFFER
ROW INPUT BUFFER
LINE ADDRESS DECODER
ROW ADDRESS DECODER
32768 × 8 BIT
RAM
(512 LIN × 512 ROW)
SENS AMP
OUTPUT BUFFER
CLOCK GENERATOR
INPUT DATA CONTROL
WRITE CONTROL W
CHIP SELECT INPUT S
OUTPUT ENABLE INPUT OE
27
20
22
11 DQ1
12 DQ2
13 DQ3
14 DQ4
15 DQ5
16 DQ6
17 DQ7
18 DQ8
DATA
INPUT
AND
OUTPUT
28 VCC(5V)
24 GND(0V)

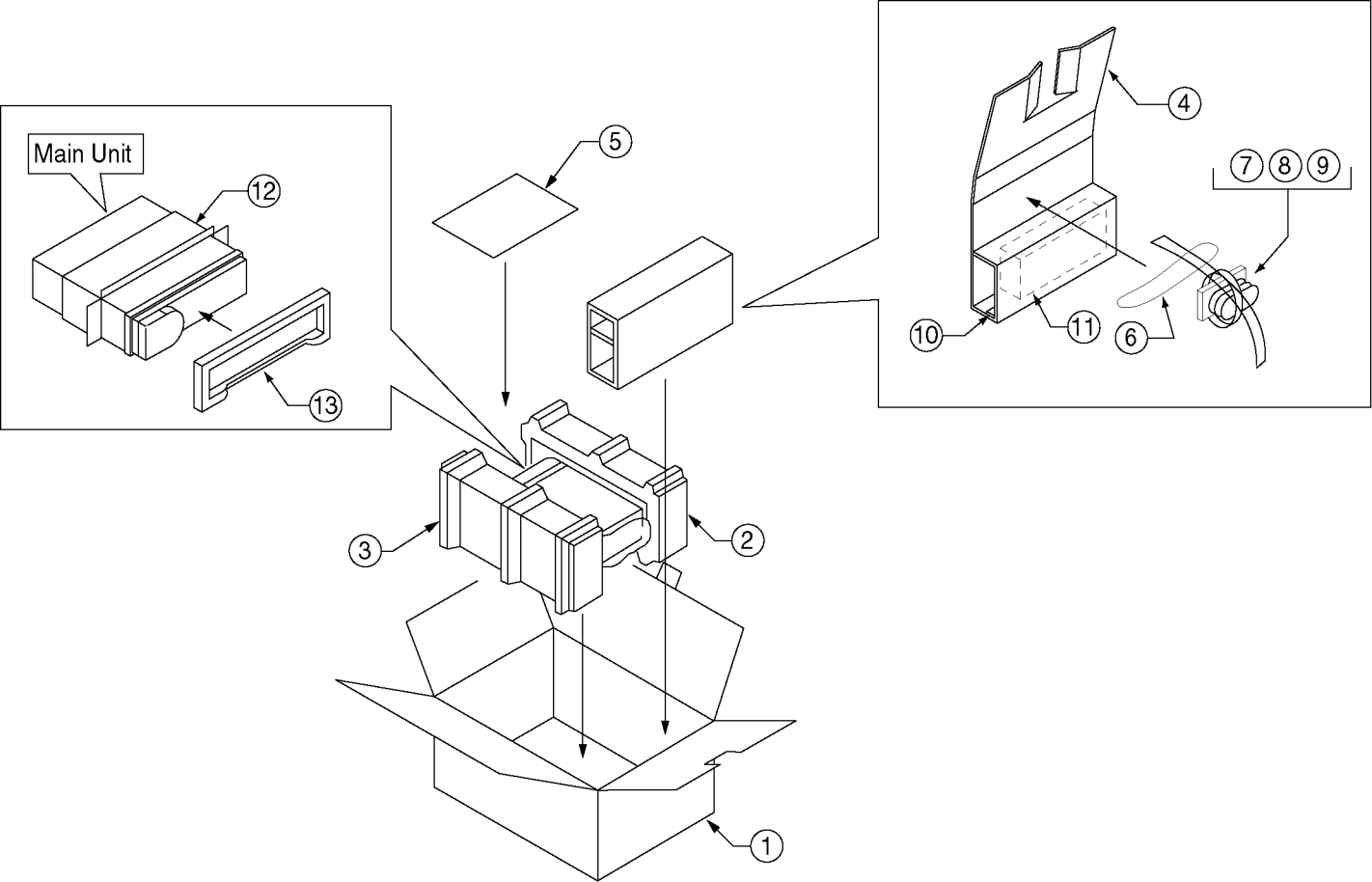
Main Unit
12
13
5
4
7
8
9
10
11
6
3
2
1

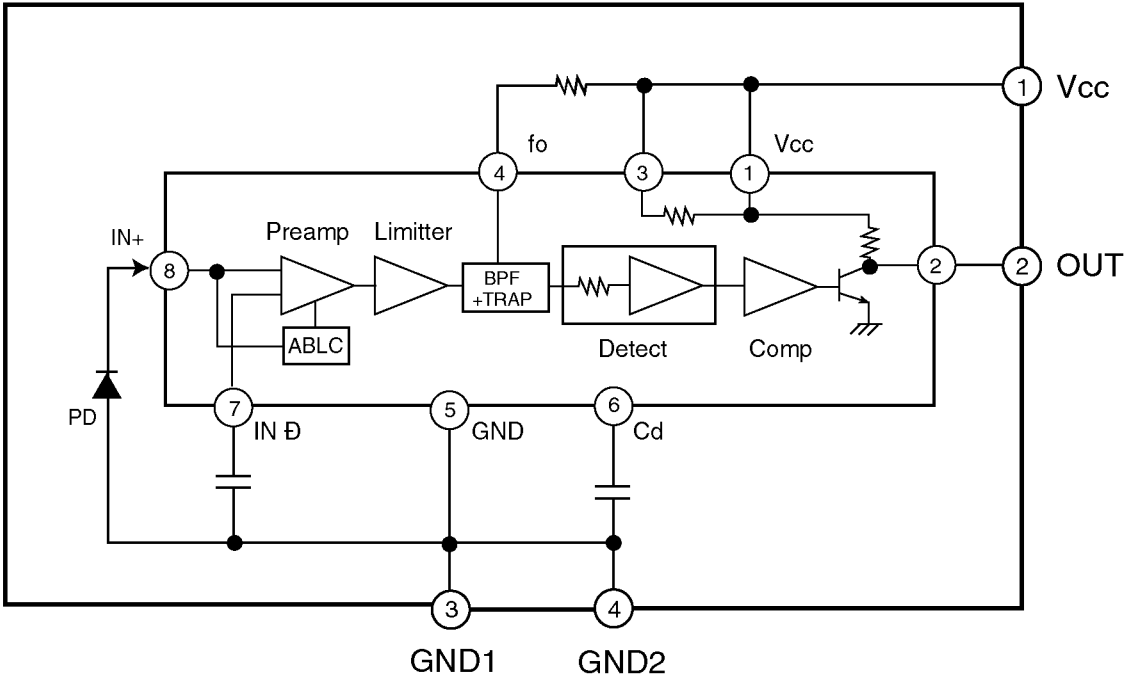
Vcc
1
fo
Vcc
4
3
1
IN+
8
Preamp
Limitter
BPF
+TRAP
2
2
OUT
ABLC
Detect
Comp
PD
7
IN Đ
5
GND
6
Cd
3
4
GND1
GND2

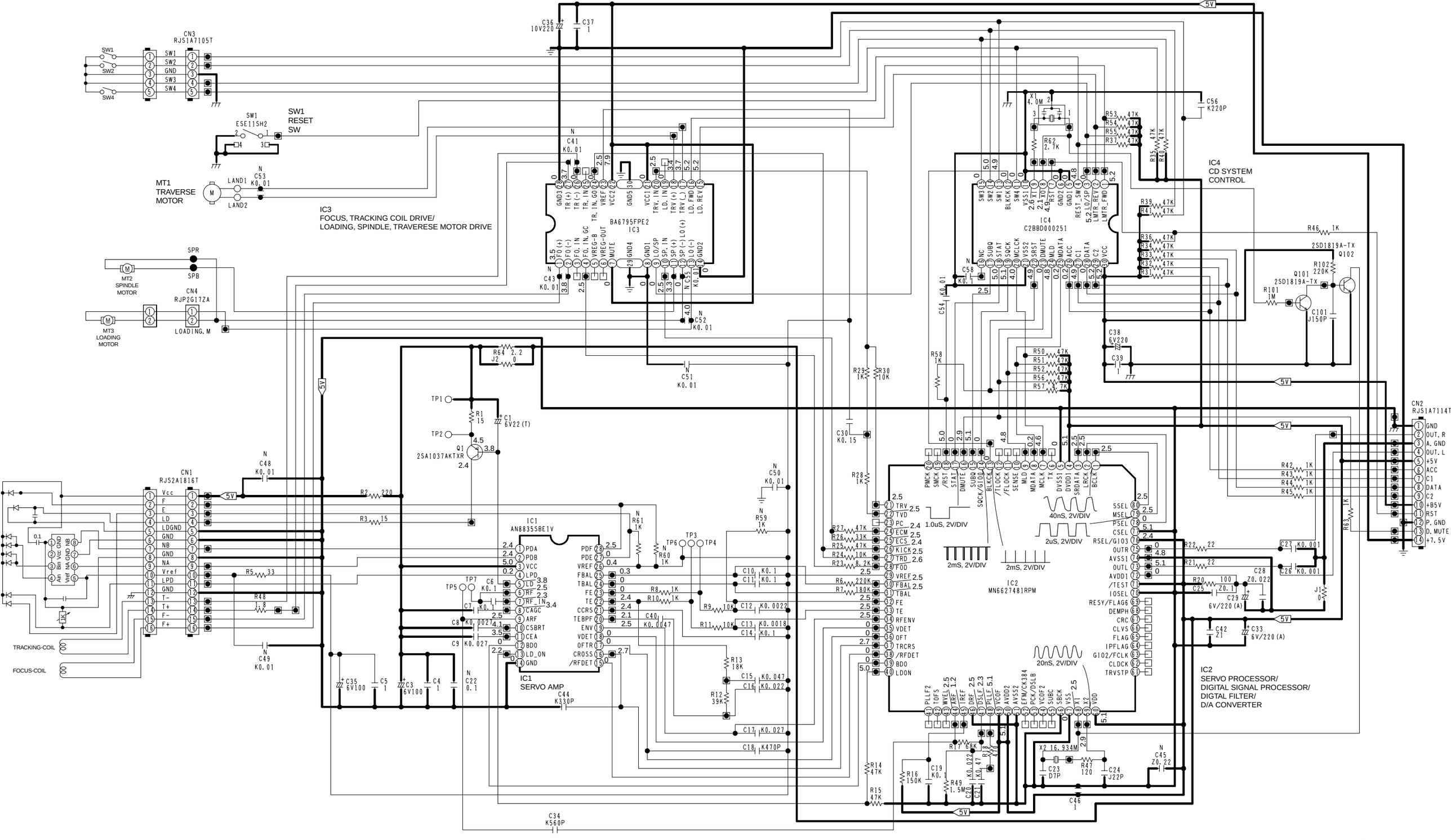

RAJ2712 [VJ62108]

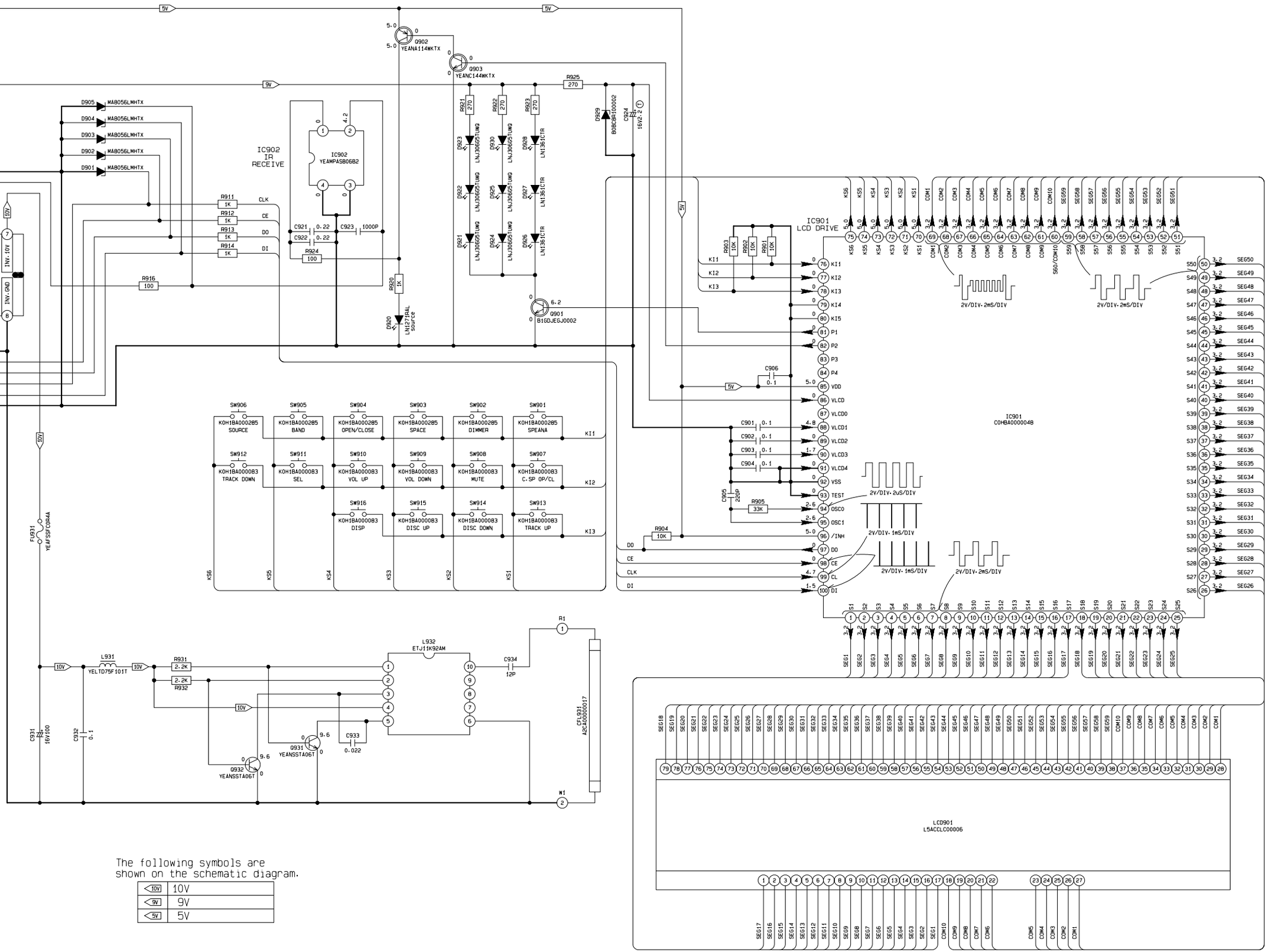

The following symbols are shown on the schematic diagram.

10V	10V
9V	9V
5V	5V

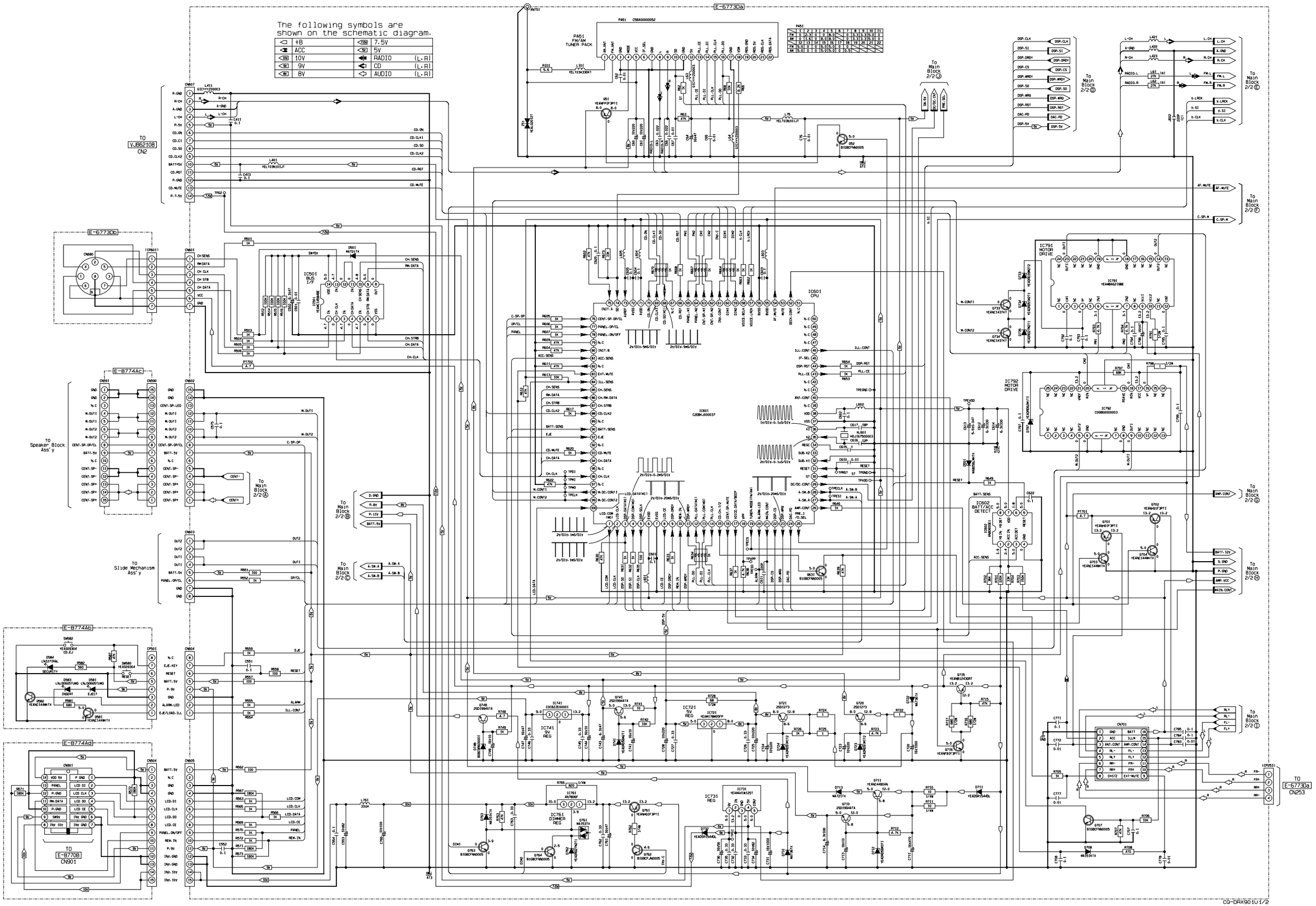
The following symbols are shown on the schematic diagram.
+B
ACC
10V
9V
8V
7.5V
5V
RADIO (L,R)
CD (L,R)
AUDIO (L,R)
E-6773Da
E-6773Dc
E-8774Ac
E-8774Ad
E-8774Ae
TO VJB62108 CN2
To Main Block 2/2 (J)
To Main Block 2/2 (I)
To Main Block 2/2 (E)
To Main Block 2/2 (F)
To Main Block 2/2 (A)
To Main Block 2/2 (B)
To Main Block 2/2 (C)
To Main Block 2/2 (G)
To Main Block 2/2 (H)
To Main Block 2/2 (D)
TO Speaker Block Ass'y
TO Slide Mechanism Ass'y
TO E-8770B CN901
TO E-6773Da CN253
IC501 BUS I/F
IC601 CPU
IC791 MOTOR DRIVE
IC792 MOTOR DRIVE
IC602 BATT/ACC DETECT
IC741 9V REG
IC721 5V REG
IC731 REG
IC761 DIMMER REG
PA51 FM/AM TUNER PACK
CN701
CD-DRX901U1/2

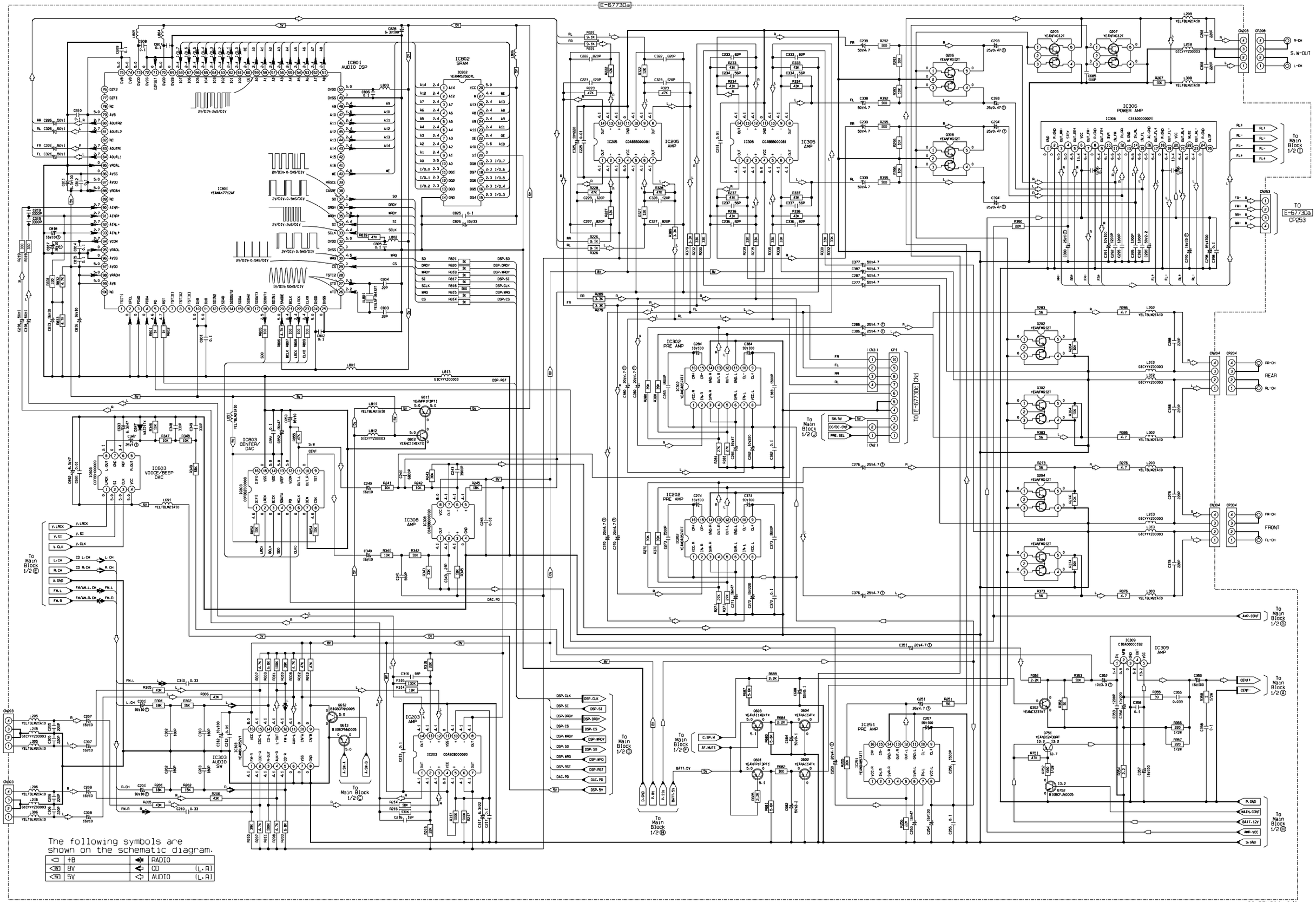
E-6773Da
IC801 AUDIO DSP
IC802 SRAM
IC803 CENTER/DAC
IC603 VOICE/BEEP DAC
IC302 PRE AMP
IC202 PRE AMP
IC251 PRE AMP
IC205 AMP
IC305 AMP
IC306 POWER AMP
IC308 AMP
IC203 AMP
IC309 AMP
IC303 AUDIO SW
To Main Block 1/2
TO E-6773Da CP253
TO E-6773Da CN1
R-CH
S.W-OUT
L-CH
REAR
FRONT
CH-R
CH-C-IN
CH-L
AUX-R
AUX-IN
AUX-L
The following symbols are shown on the schematic diagram.
+B
8V
5V
RADIO
CD (L,R)
AUDIO (L,R)
CQ-DRX901U 2/2

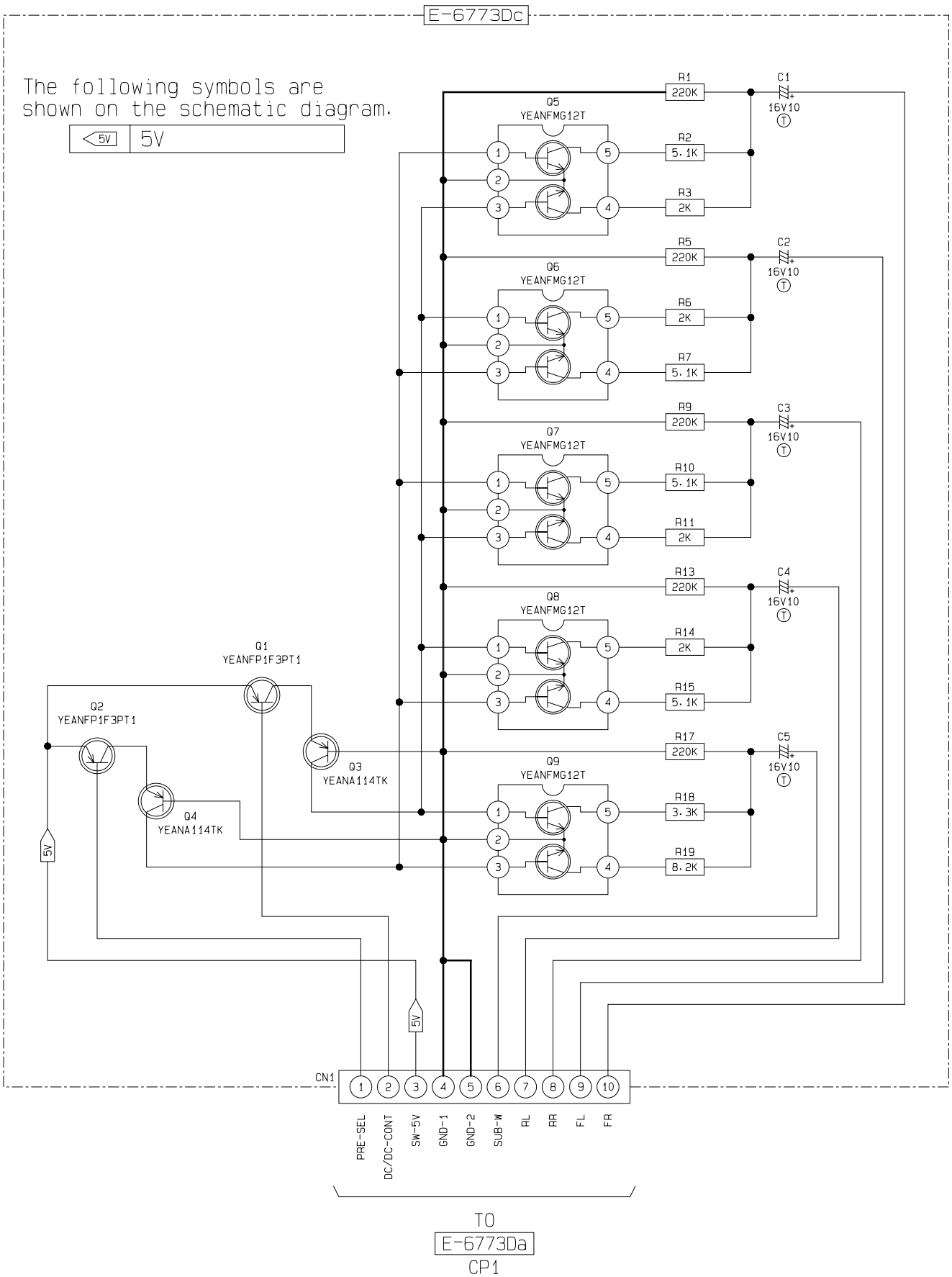
The following symbols are shown on the schematic diagram.
5V
5V
R1
220K
C1
16V10
Q5
YEANFMG12T
R2
5.1K
R3
2K
R5
220K
C2
16V10
Q6
YEANFMG12T
R6
2K
R7
5.1K
R9
220K
C3
16V10
Q7
YEANFMG12T
R10
5.1K
R11
2K
R13
220K
C4
16V10
Q8
YEANFMG12T
R14
2K
R15
5.1K
R17
220K
C5
16V10
Q9
YEANFMG12T
R18
3.3K
R19
8.2K
Q1
YEANFP1F3PT1
Q2
YEANFP1F3PT1
Q3
YEANA114TK
Q4
YEANA114TK
5V
5V
CN1
1 2 3 4 5 6 7 8 9 10
PRE-SEL
DC/DC-CONT
SW-5V
GND-1
GND-2
SUB-W
RL
RR
FL
FR
TO
E-6773Da
CP1

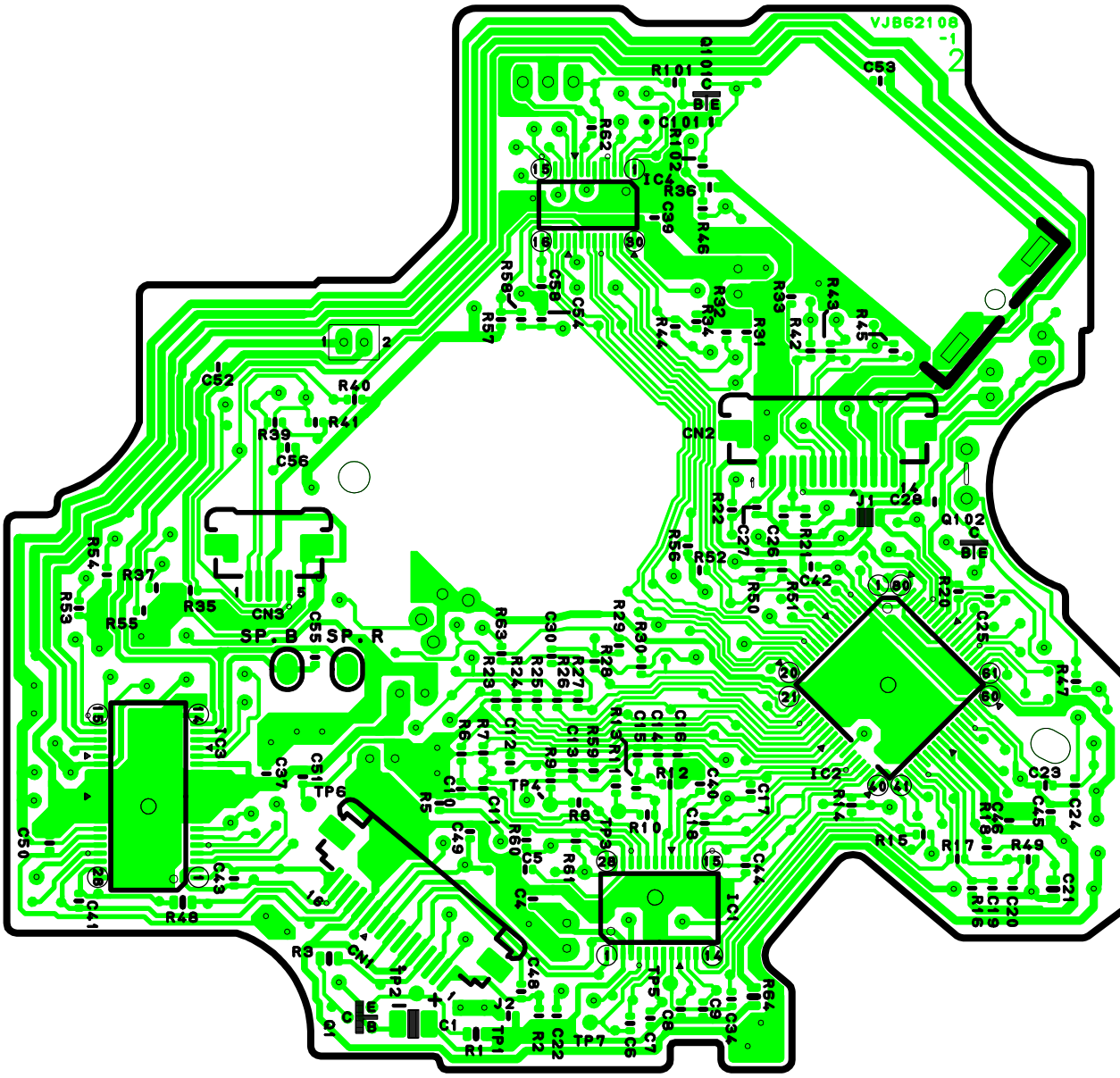

[VJB62108] Bottom View]

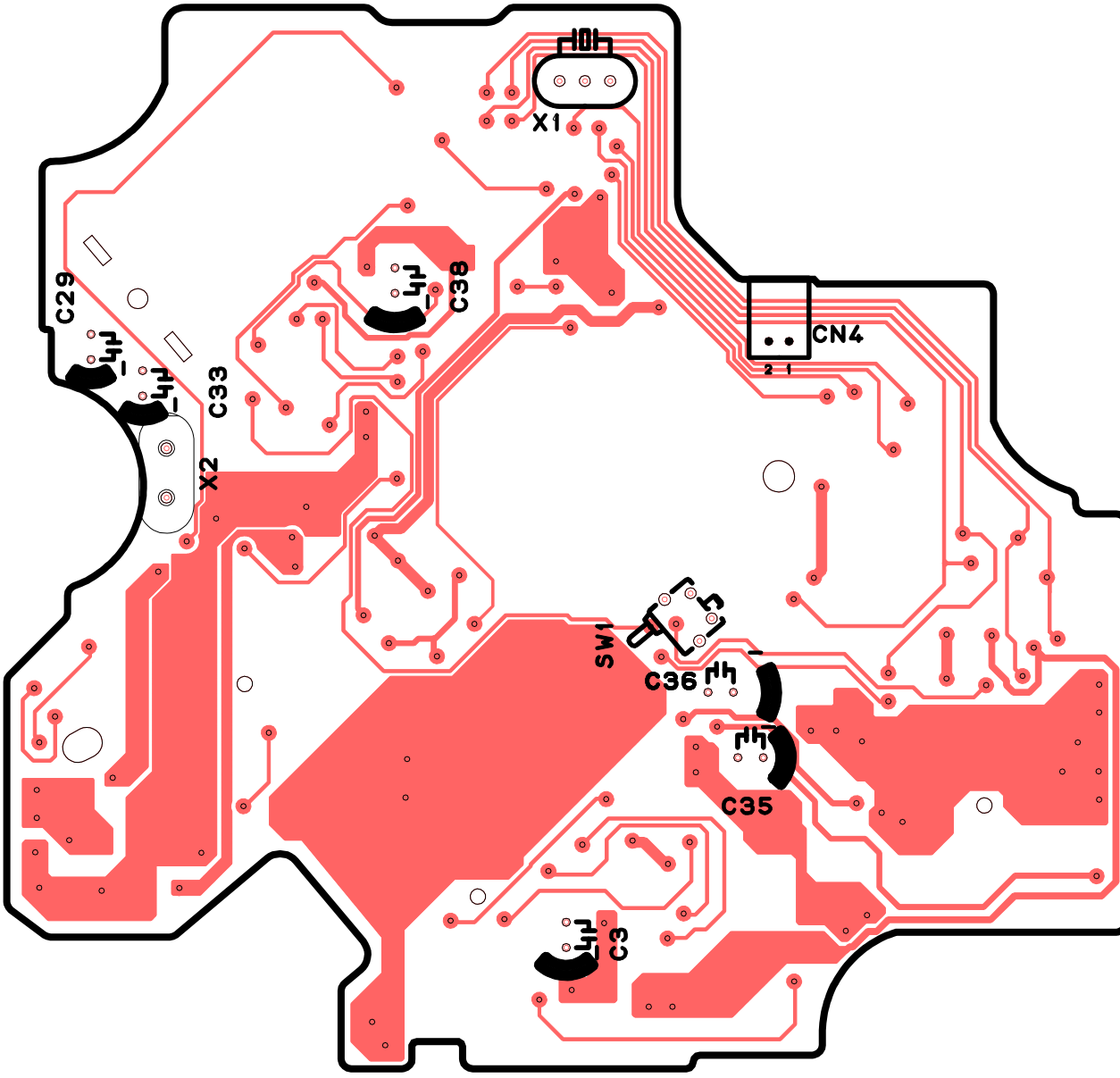

[VJB62108] [Top View]

● CD Deck Block

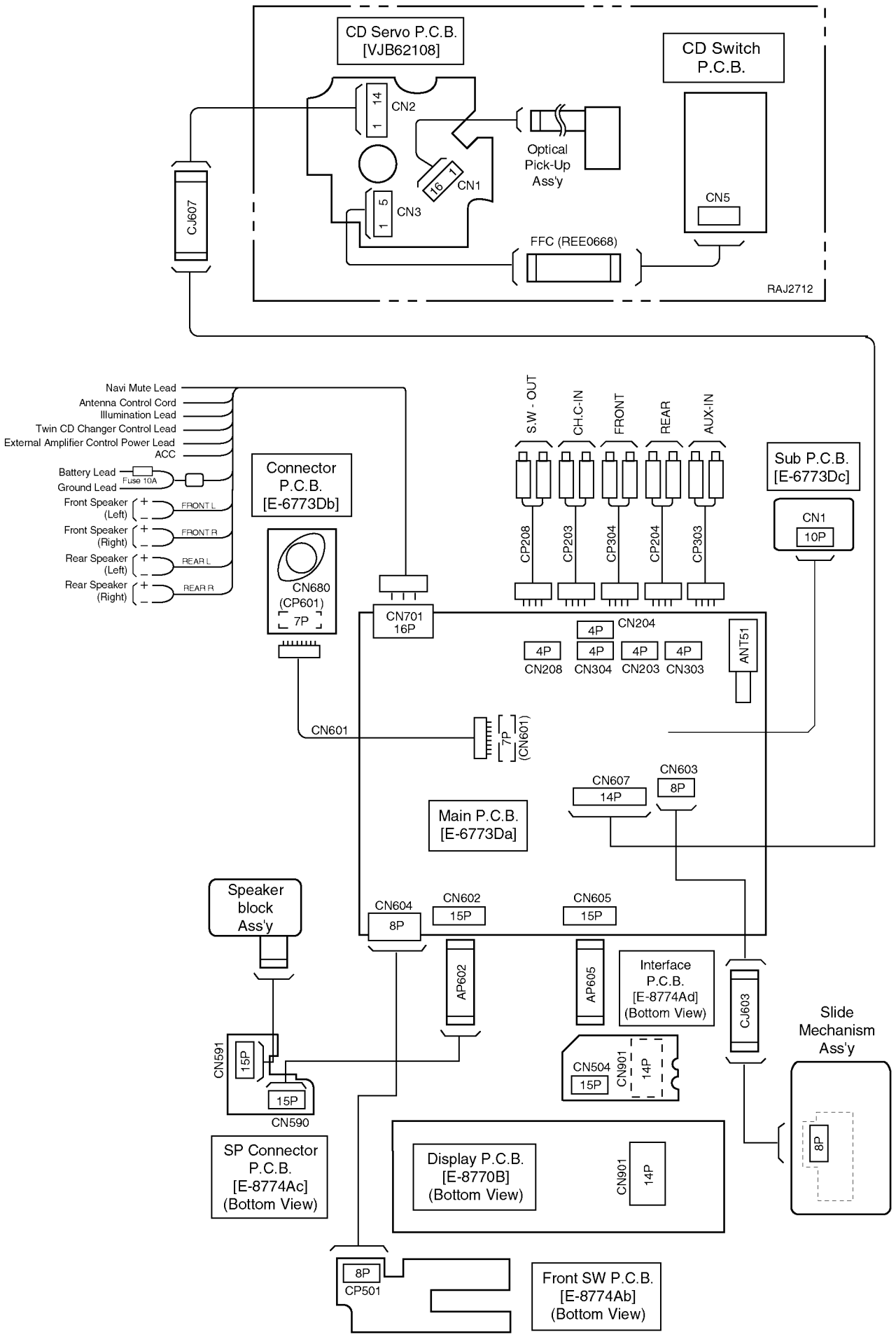

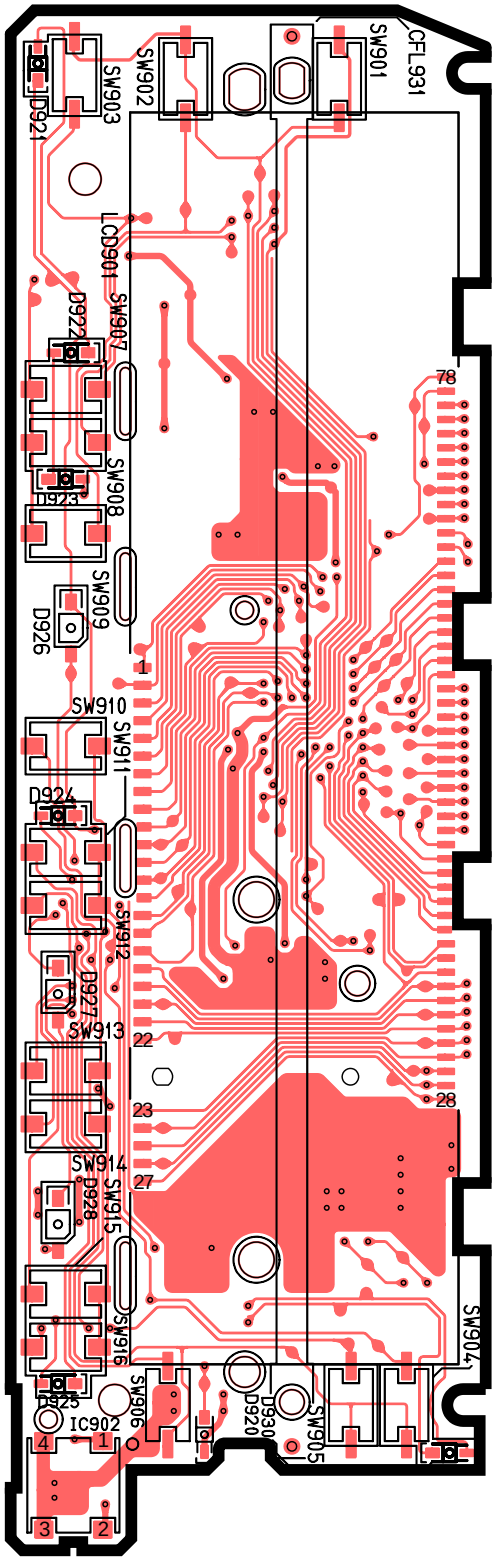

[E-8770B]
[Top View]

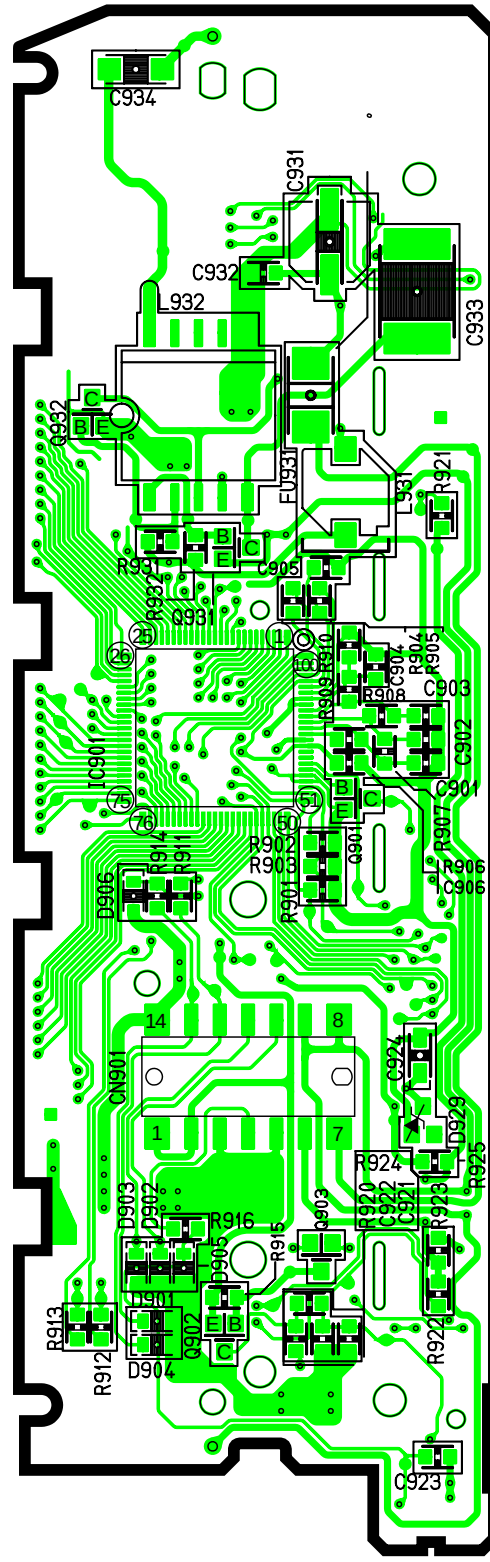

[E-8770B]
[Bottom View]

[E-6773Da][Bottom View]

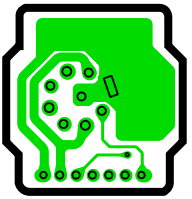

[E-6773Db]
[Bottom View]

[E-6773Da][Top View]

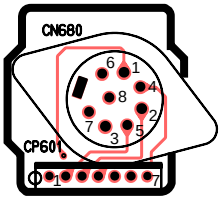

[E-6773Db]
[Top View]

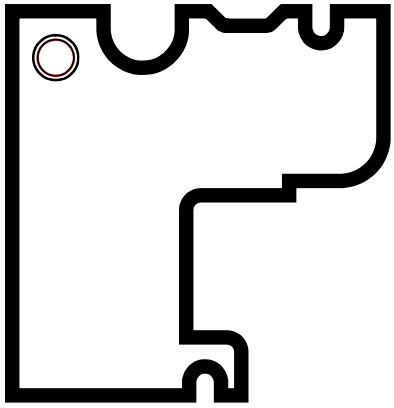

[E-8774Ac]
[Top View]

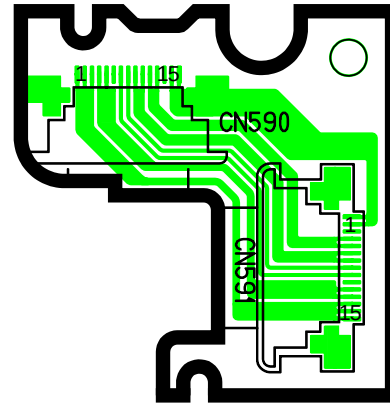

[E-8774Ac]
[Bottom View]

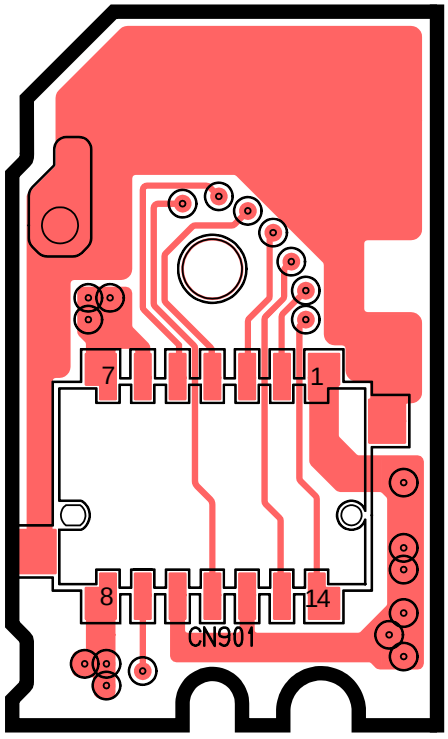

[E-8774Ad]
[Top View]

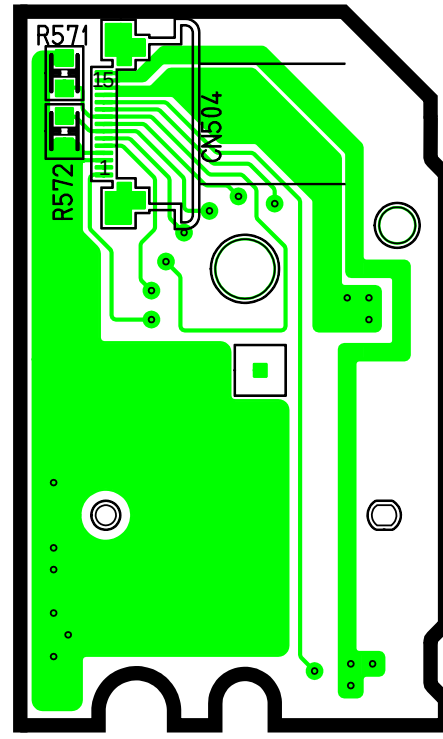

[E-8774Ad]
[Bottom View]

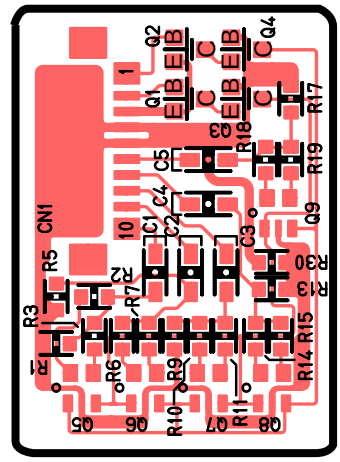

[E-6773Dc]

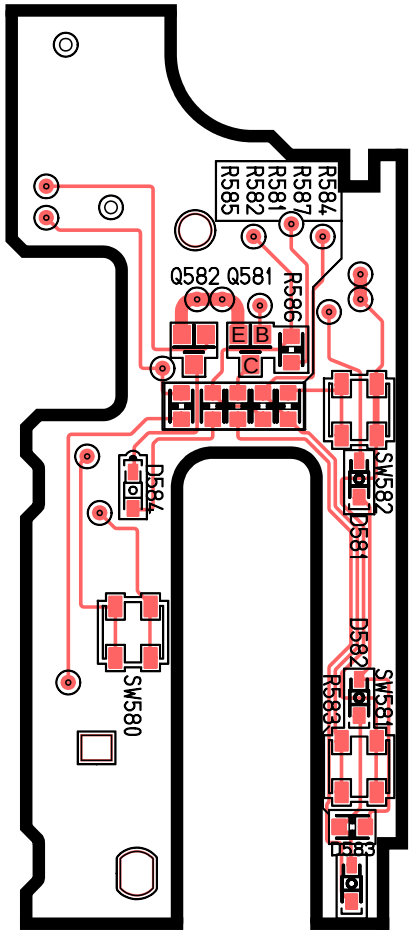

[E-8774Ab]
[Top View]

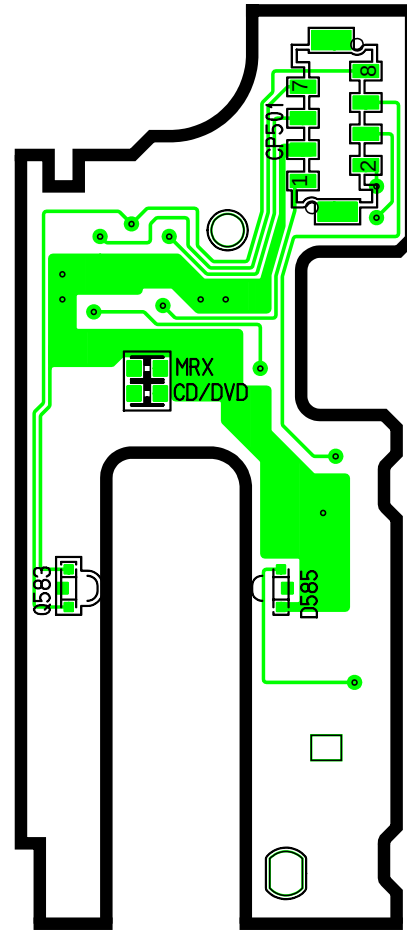

[E-8774Ab]
[Bottom View]