MOSFET
50Wx4
BAND
APM
POWER
SRC
VOLUME/PUSH SEL
MP3/WMA
Panasonic
CQ-DP383U
SIRIUS
FM 87.9
LOUD
ST
MONO
LOCAL
FOLDER/DISC
TUNE
TRACK
CLOCK
DISP
SCROLL
RANDOM
SCAN
REPEAT
MUTE
1
2
3
4
5
6
LOUD

178mm
150mm
50mm
MOSFET
50Wx4
BAND
APM
POWER
SRC
VOLUME/PUSH SEL
MP3/WMA
Panasonic
CQ-DP383U
SIRIUS
FM2 89.9
LOUD
ST
FOLDER/DISC
TUNE
TRACK
CLOCK
DISP
SCROLL
RANDOM
SCAN
REPEAT
MUTE
1
2
3
4
5
6
LOUD

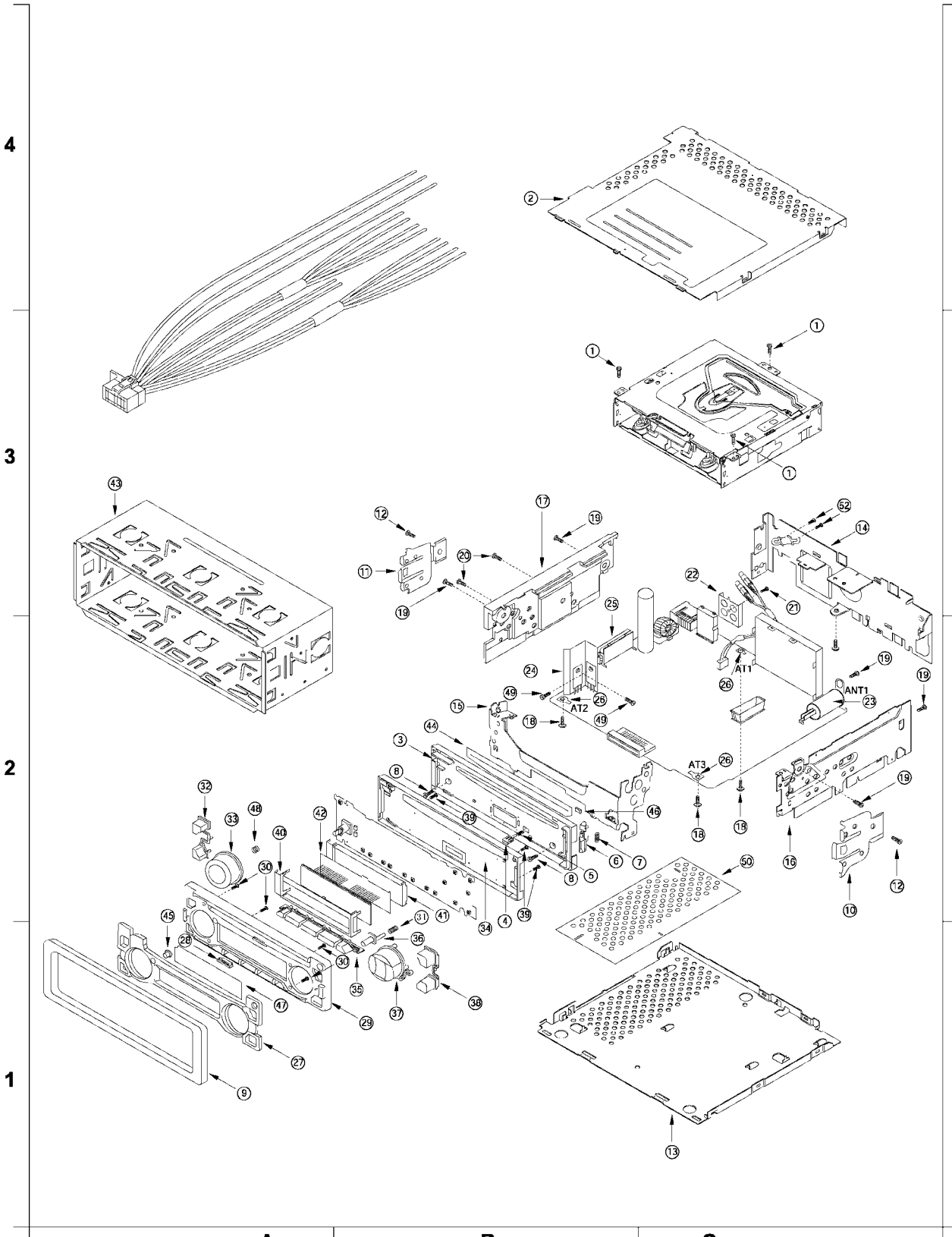
4
3
2
1
A
B
C
AT1
AT2
AT3
ANT1

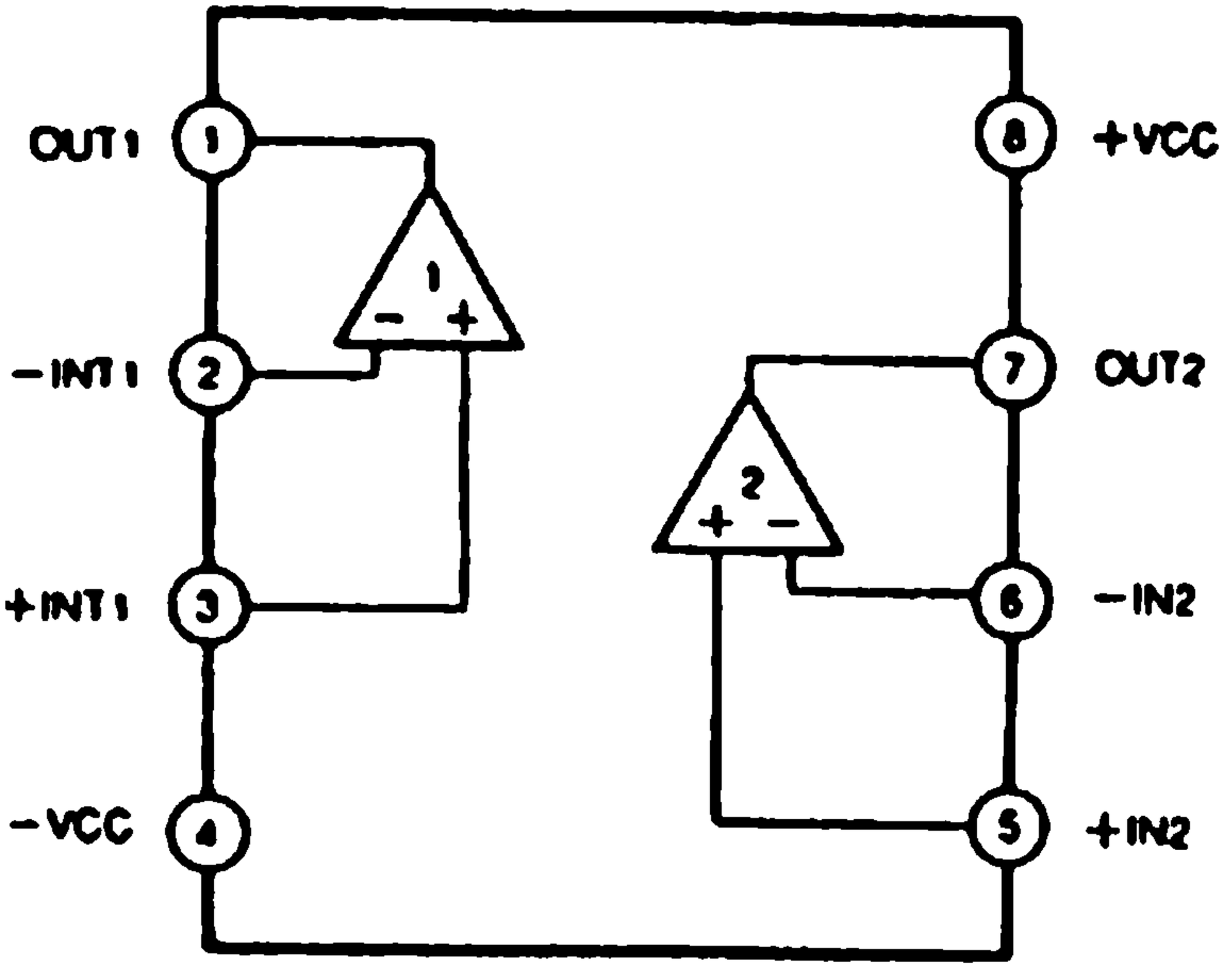
OUT1
1
-INT1
2
+INT1
3
-VCC
4
+VCC
8
OUT2
7
-IN2
6
+IN2
5
1
2

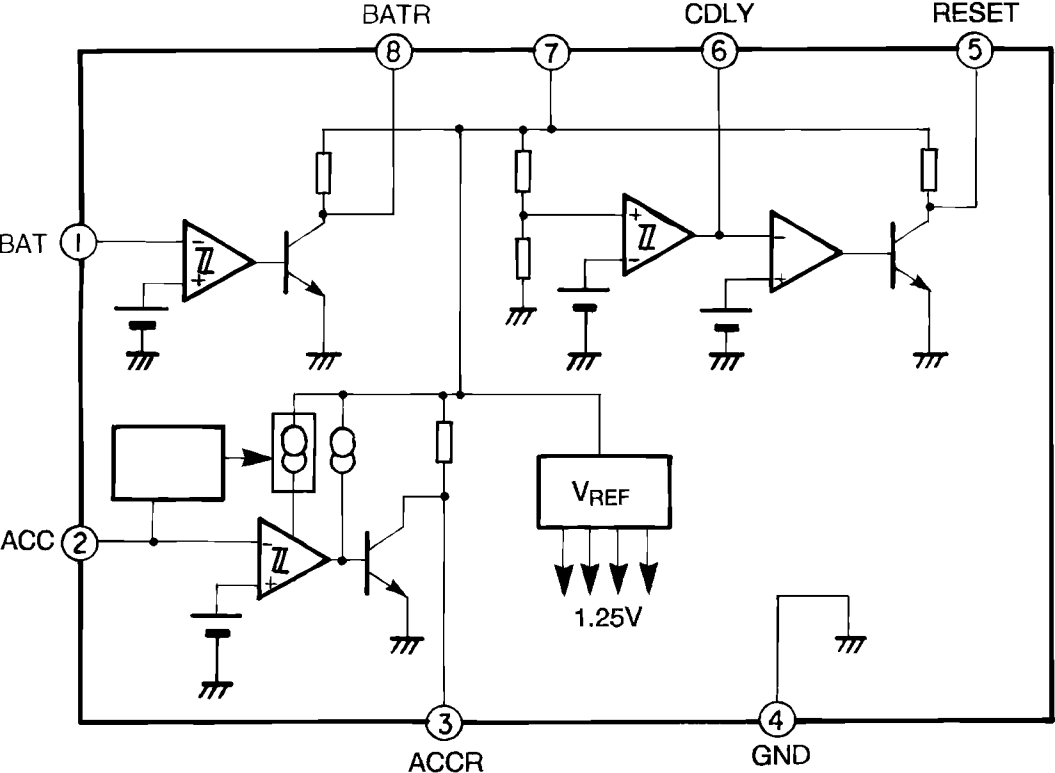
BATR
CDLY
RESET
8
7
6
5
BAT
1
ACC
2
VREF
1.25V
3
4
ACCR
GND

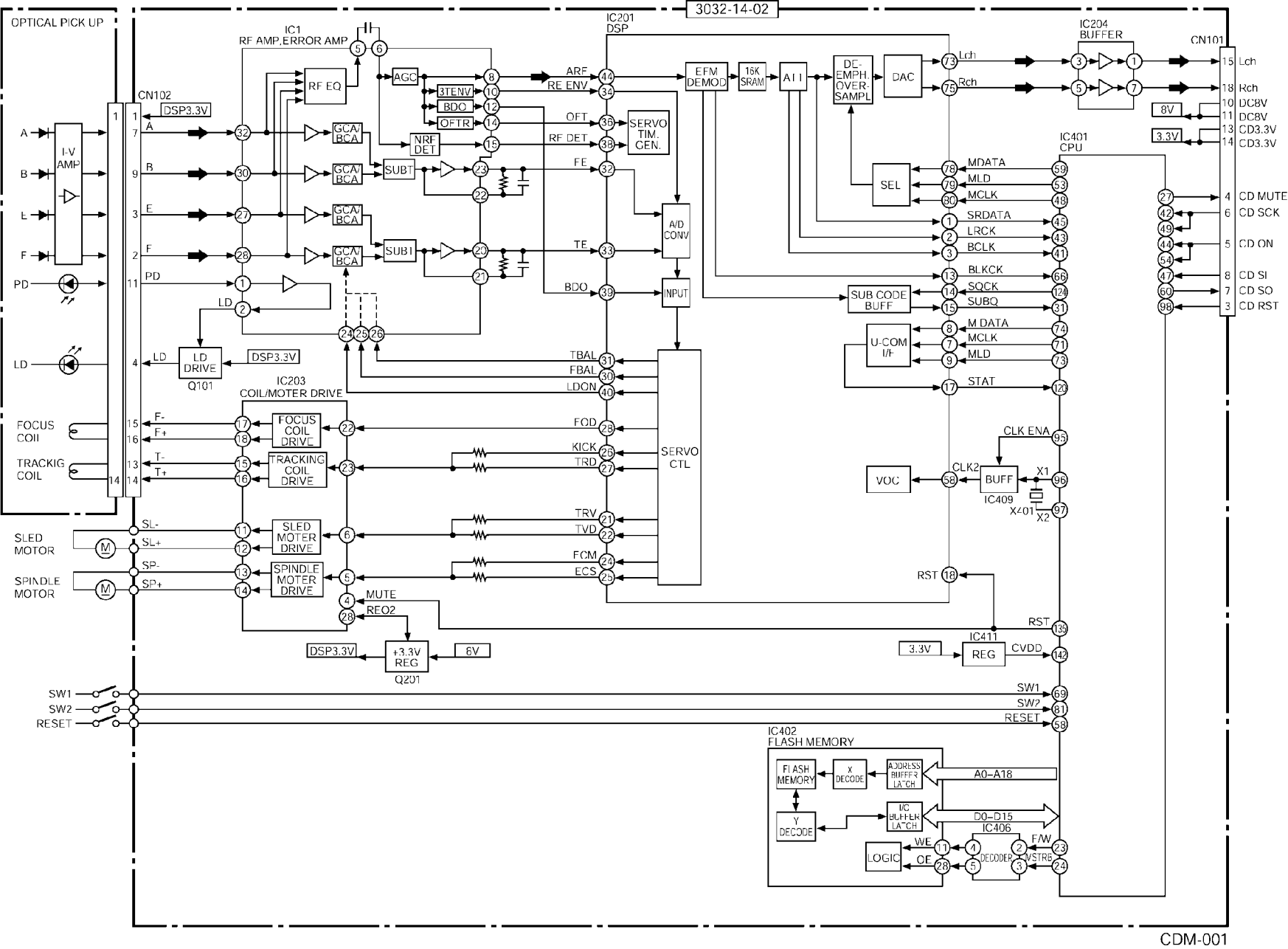
3032-14-02
OPTICAL PICK UP
I-V AMP
A
B
E
F
PD
LD
FOCUS COIL
TRACKIG COIL
SLED MOTOR
SPINDLE MOTOR
SW1
SW2
RESET
CN102
DSP3.3V
IC1
RF AMP,ERROR AMP
RF EQ
AGC
3TENV
BDO
OFTR
NRF DET
GCA/BCA
SUBT
SUBI
LD DRIVE
Q101
IC203
COIL/MOTER DRIVE
FOCUS COIL DRIVE
TRACKING COIL DRIVE
SLED MOTER DRIVE
SPINDLE MOTER DRIVE
MUTE
REO2
+3.3V REG
Q201
6V
IC201
DSP
ARF
RE ENV
OFT
RF DET
FE
TE
BDO
SERVO TIM. GEN.
A/D CONV
INPUT
TBAL
FBAL
LDON
FOD
KICK
TRD
TRV
TVD
FCM
ECS
SERVO CTL
EFM DEMOD
16K SRAM
AII
DE-EMPH. OVER-SAMPL
DAC
Lch
Rch
IC204
BUFFER
CN101
8V
3.3V
DC8V
CD3.3V
IC401
CPU
SEL
MDATA
MLD
MCLK
SRDATA
LRCK
BCLK
BLKCK
SQCK
SUBQ
SUB CODE BUFF
U-COM I/F
M DATA
STAT
CD MUTE
CD SCK
CD ON
CD SI
CD SO
CD RST
CLK ENA
VOC
CLK2
BUFF
IC409
X1
X2
X401
RST
IC411
REG
CVDD
IC402
FLASH MEMORY
X DECODE
ADDRESS BUFFER LATCH
A0–A18
Y DECODE
I/O BUFFER LATCH
D0–D15
IC406
LOGIC
WE
OE
DECODER
F/W
STRB

CDM-001

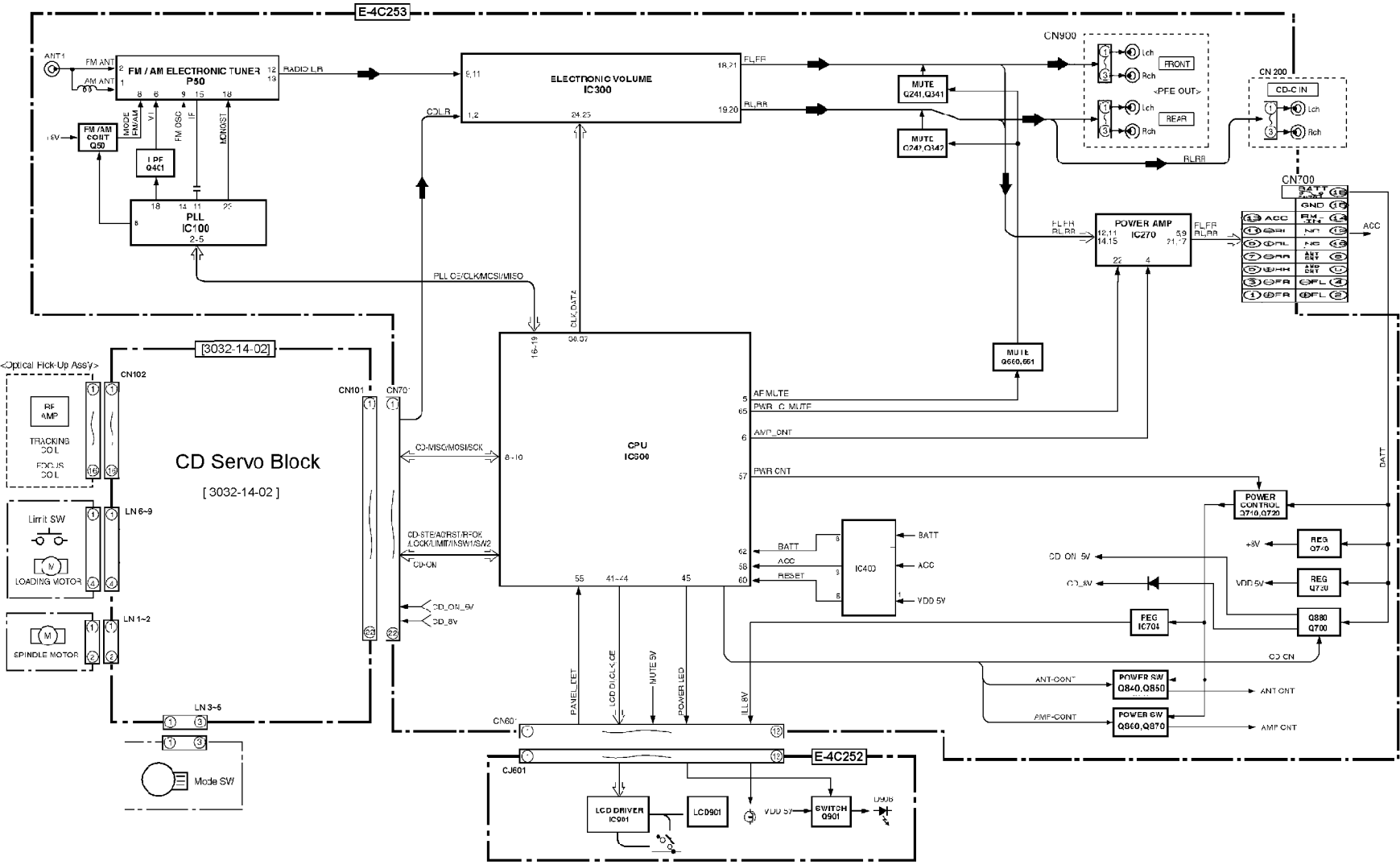
E-4C253
ANT1
FM ANT
AM ANT
FM / AM ELECTRONIC TUNER
P50
RADIO LR
ELECTRONIC VOLUME
IC300
FLFR
FLRR
RLFR
RLRR
CDLR
MUTE
Q241,Q341
MUTE
Q242,Q342
CN900
Lch
Rch
FRONT
REAR
<PFE OUT>
CN 200
CD-C IN
FM /AM
CONT
Q50
MODE
FM/AM
FM OSC
IF
MONOST
LPF
Q401
PLL
IC100
2-5
PLL CE/CLK/MCSI/MISO
CLK,DATA
POWER AMP
IC270
CN700
BATT
GND
ACC
ANT CNT
AMP CNT
[3032-14-02]
<Optical Pick-Up Ass'y>
CN102
RF
AMP
TRACKING
COIL
FOCUS
COIL
CD Servo Block
[3032-14-02]
Limit SW
LOADING MOTOR
LN 6~9
LN 1~2
SPINDLE MOTOR
LN 3~5
Mode SW
CN101
CN70'
CD-MISO/MOSI/SCK
CD-STB/A0/RST/RFOK
/LOCK/LIMIT/KSW1/SW2
CD-ON
CD_ON_5V
CD_8V
CPU
IC500
AF MUTE
PWR_C MUTE
AMP_CNT
PWR CNT
BATT
ACC
RESET
IC400
VDD 5V
MUTE
Q660,661
POWER
CONTROL
Q710,Q720
REG
Q740
REG
Q730
Q880
Q700
REG
IC704
CD ON 5V
CD_8V
+8V
VDD 5V
CD CN
ANT-CONT
AMP-CONT
POWER SW
Q840,Q850
POWER SW
Q860,Q870
ANT CNT
AMP CNT
PANEL_DET
LCD DI,CLK,CE
MUTE 5V
POWER LED
ILL 8V
CN60'
CJ601
E-4C252
LCD DRIVER
IC901
LCD901
VDD 5V
SWITCH
Q901
D906

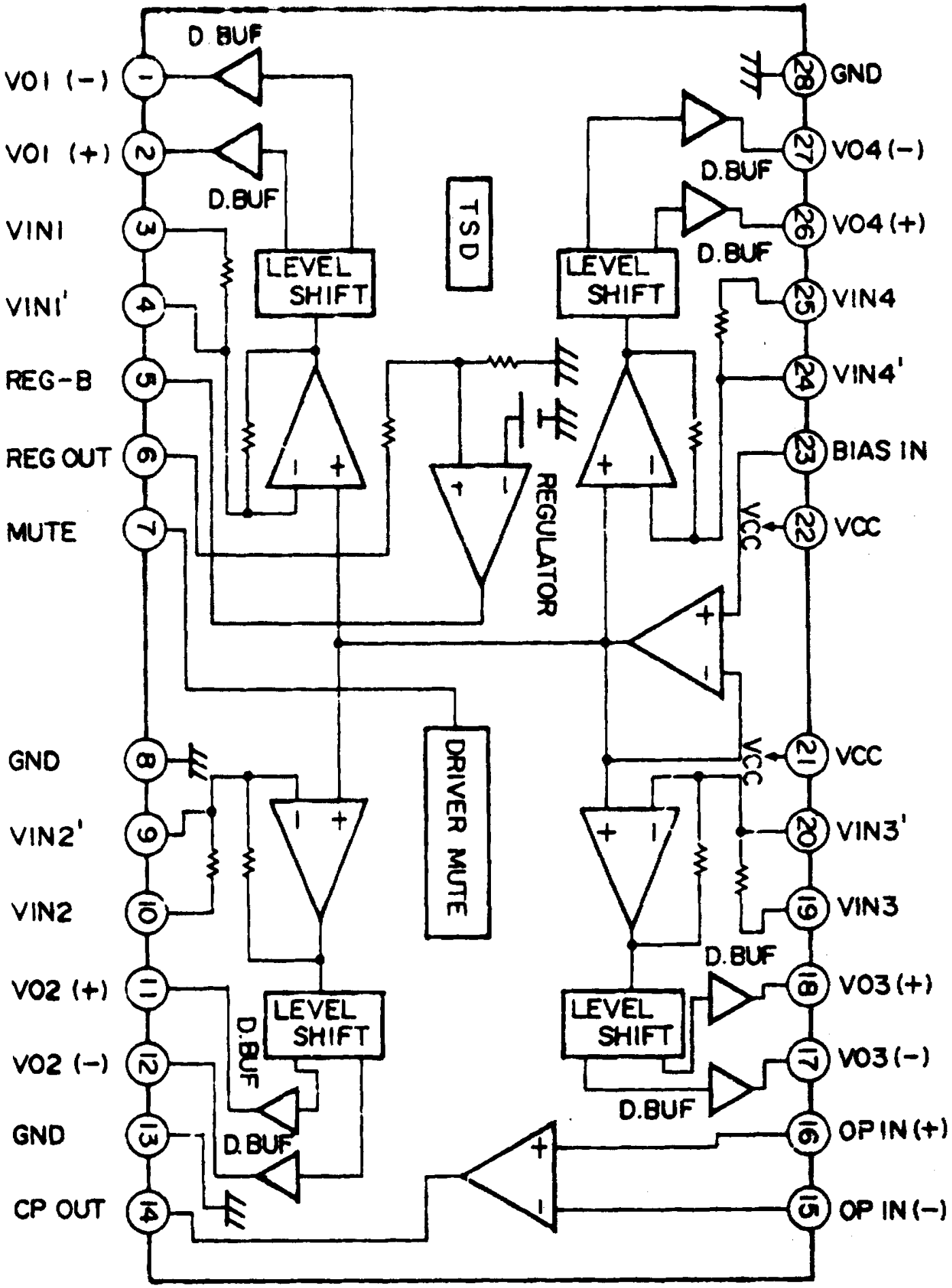
VO1 (−)
VO1 (+)
VIN1
VIN1'
REG-B
REG OUT
MUTE
GND
VIN2'
VIN2
VO2 (+)
VO2 (−)
GND
CP OUT
GND
VO4 (−)
VO4 (+)
VIN4
VIN4'
BIAS IN
VCC
VCC
VIN3'
VIN3
VO3 (+)
VO3 (−)
OP IN (+)
OP IN (−)
D. BUF
D.BUF
LEVEL SHIFT
TSD
REGULATOR
DRIVER MUTE

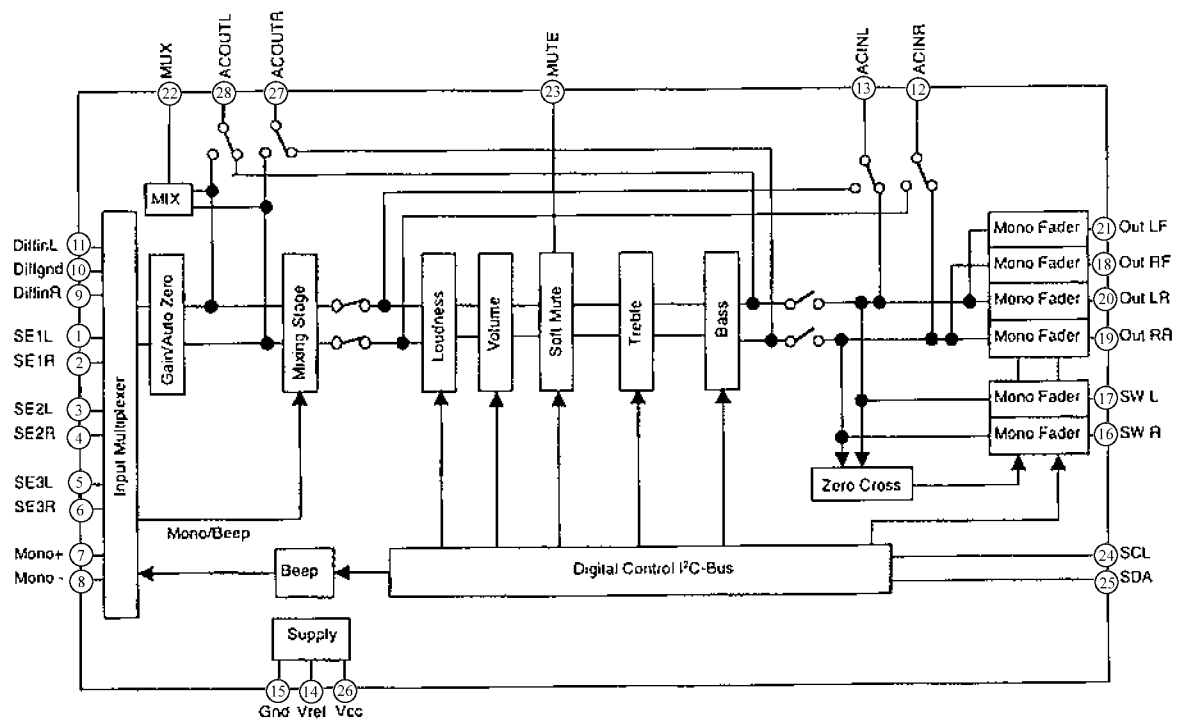
MUX
ACOUTL
ACOUTR
MUTE
ACINL
ACINR
22
28
27
23
13
12
MIX
DiffinL 11
Diffgnd 10
DiffinR 9
SE1L 1
SE1R 2
SE2L 3
SE2R 4
SE3L 5
SE3R 6
Mono+ 7
Mono - 8
Input Multiplexer
Gain/Auto Zero
Mixing Stage
Loudness
Volume
Soft Mute
Treble
Bass
Mono Fader
Mono Fader
Mono Fader
Mono Fader
Mono Fader
Mono Fader
21 Out LF
18 Out RF
20 Out LR
19 Out RR
17 SW L
16 SW R
Zero Cross
Mono/Beep
Beep
Digital Control I²C-Bus
24 SCL
25 SDA
Supply
15 Gnd
14 Vref
26 Vcc

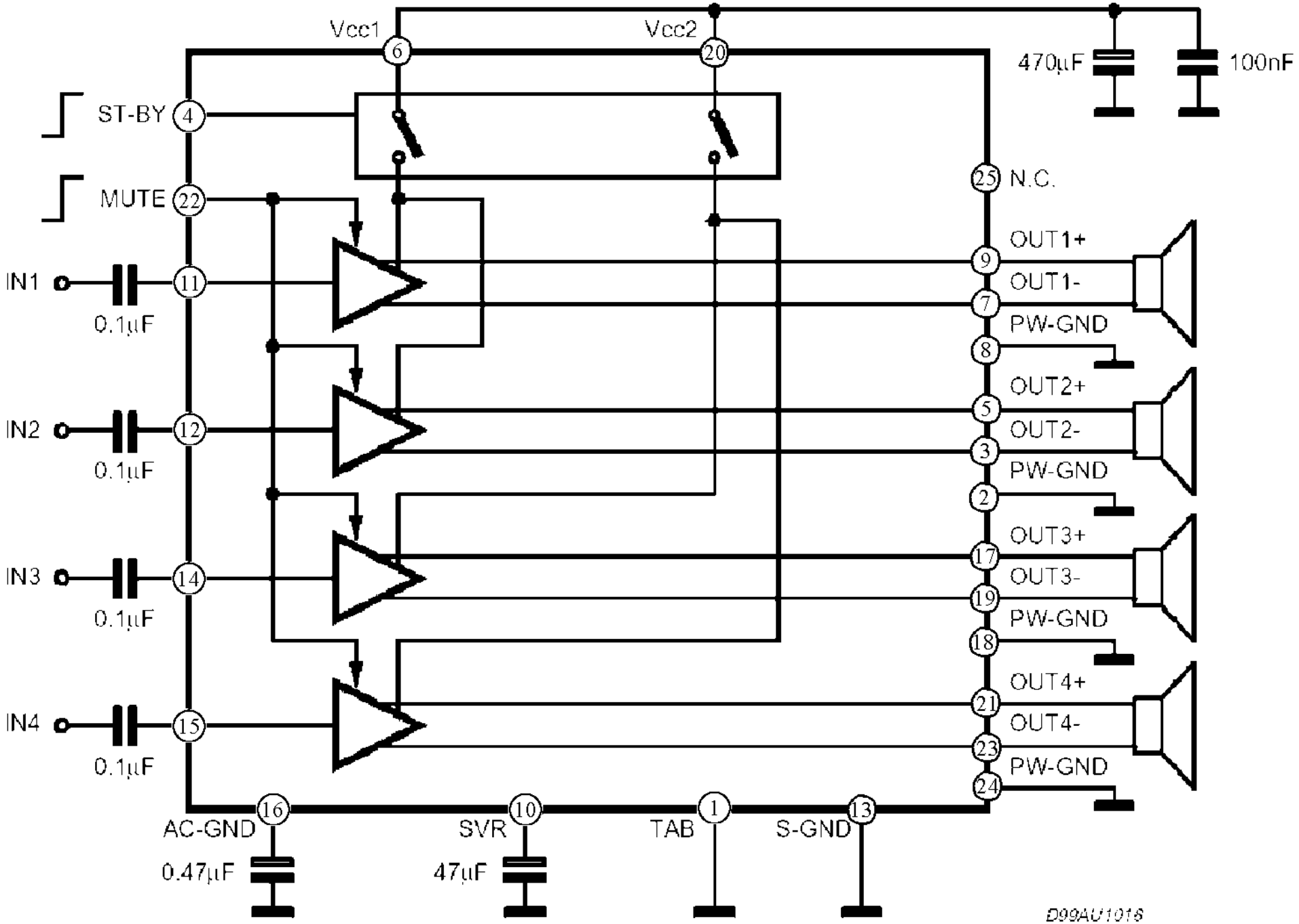
Vcc1
6
Vcc2
20
470µF
100nF
ST-BY
4
MUTE
22
25
N.C.
IN1
11
0.1µF
OUT1+
9
OUT1-
7
PW-GND
8
IN2
12
0.1µF
OUT2+
5
OUT2-
3
PW-GND
2
IN3
14
0.1µF
OUT3+
17
OUT3-
19
PW-GND
18
IN4
15
0.1µF
OUT4+
21
OUT4-
23
PW-GND
24
16
AC-GND
0.47µF
10
SVR
47µF
1
TAB
13
S-GND
D99AU1016

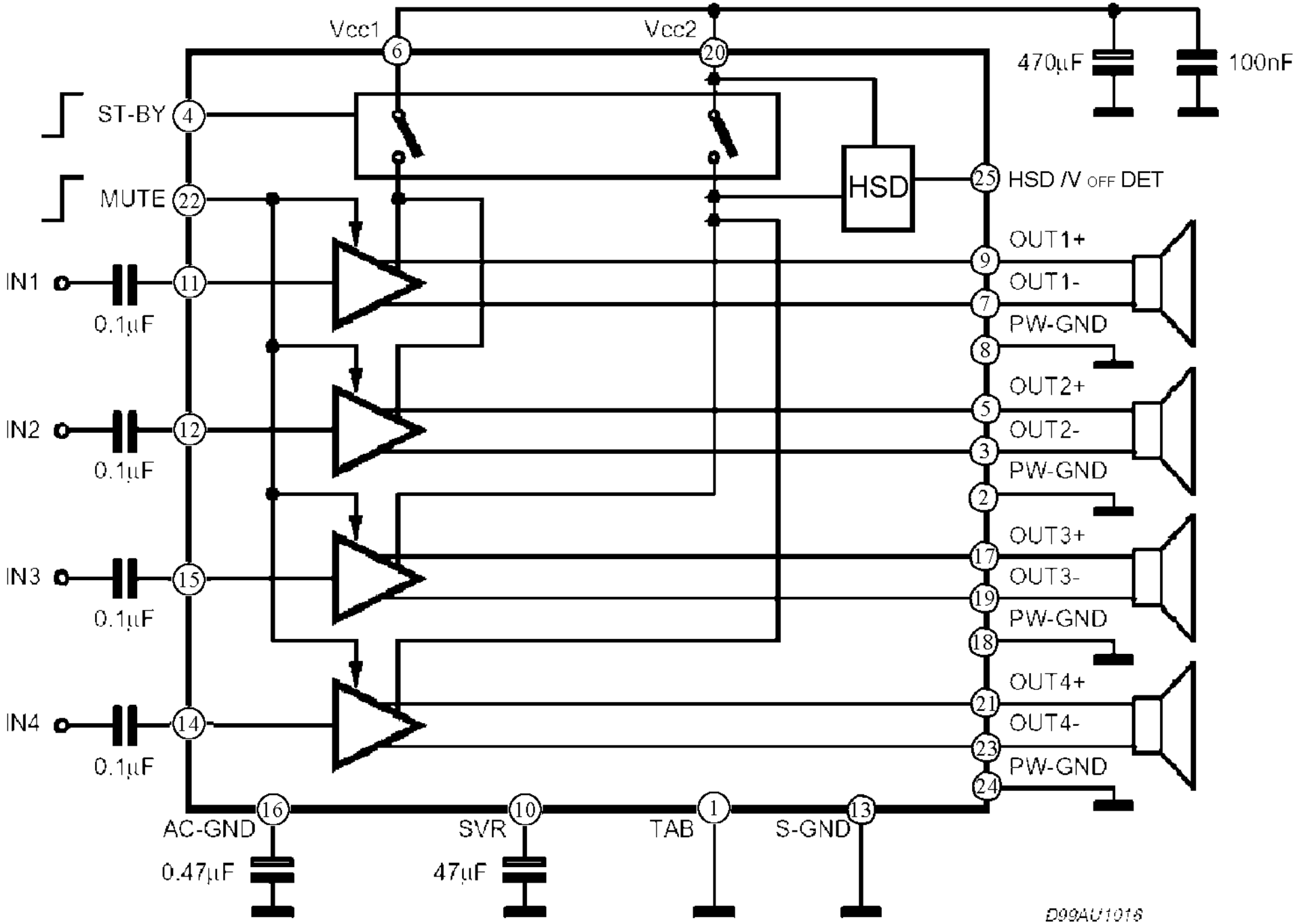
Vcc1
6
Vcc2
20
470µF
100nF
ST-BY
4
MUTE
22
HSD
25
HSD /V OFF DET
IN1
11
0.1µF
IN2
12
0.1µF
IN3
15
0.1µF
IN4
14
0.1µF
OUT1+
9
OUT1-
7
PW-GND
8
OUT2+
5
OUT2-
3
PW-GND
2
OUT3+
17
OUT3-
19
PW-GND
18
OUT4+
21
OUT4-
23
PW-GND
24
AC-GND
16
0.47µF
SVR
10
47µF
TAB
1
S-GND
13
D99AU1016

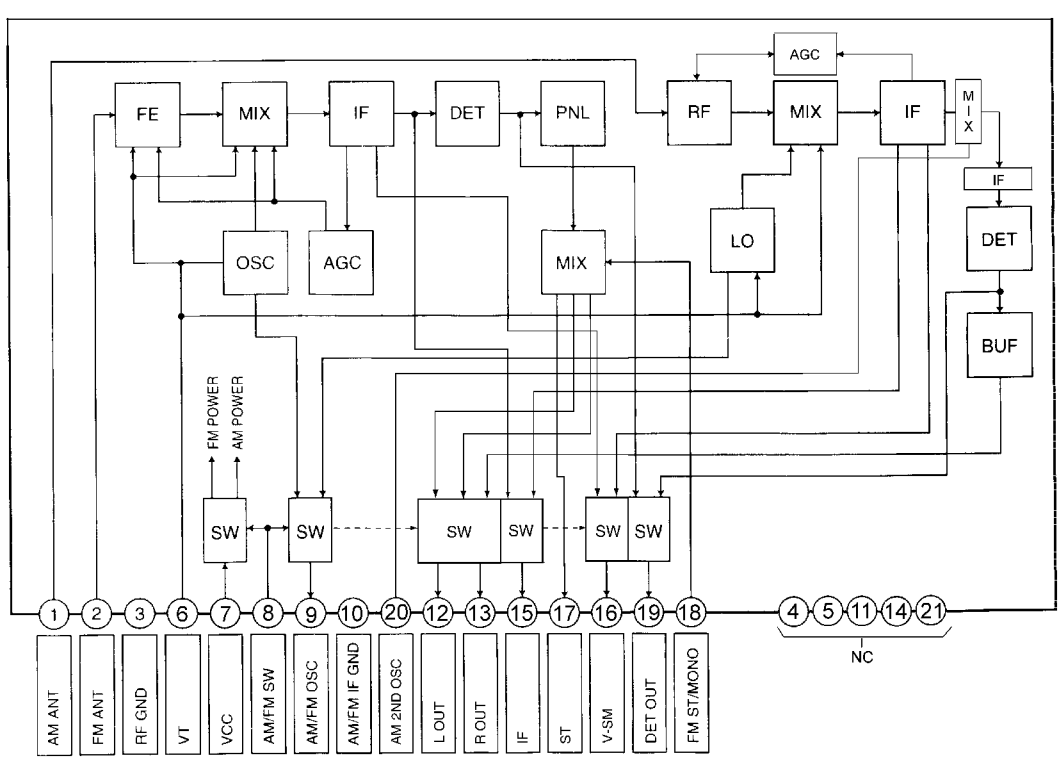
AGC
FE
MIX
IF
DET
PNL
RF
MIX
IF
MIX
IF
DET
BUF
LO
OSC
AGC
MIX
FM POWER
AM POWER
SW
SW
SW
SW
SW
SW
1
2
3
6
7
8
9
10
20
12
13
15
17
16
19
18
4
5
11
14
21
NC
AM ANT
FM ANT
RF GND
VT
VCC
AM/FM SW
AM/FM OSC
AM/FM IF GND
AM 2ND OSC
L OUT
R OUT
IF
ST
V-SM
DET OUT
FM ST/MONO

Order No. ACED021193C7
C4

Service Manual

AUTOMOTIVE AFTERMARKET

COMPACT disc DIGITAL AUDIO TEXT

WMA MP3

CQ-DP383U

Removable Front Panel MP3 CD Player / Receiver with Changer Control

Specification*

General	
Power Supply	DC 12V (11V - 16V), Test Voltage 14.4V Negative Ground
Tone Controls	Bass ; ±12dB at 100Hz Treble ; ±12dB at 10kHz
Current Consumption	Less than 2.2A (CD play mode, 0.5W×4ch)
Maximum Power Output	50W×4ch (at 1kHz, Vol. Max.)
Suitable Speaker Impedance	4-8Ω
Pre-Amp Output Voltage	2V (CD play mode; 1kHz, 0dB)
Output Impedance	200Ω
FM Stereo Radio	
Frequency Range	87.5 - 108MHz
Usable Sensitivity	11.0dBf (1.25µV, 75Ω)
AM Radio	
Frequency Range	530 - 1,710kHz
Usable Sensitivity	28dB/µV (25µV, S/N 20dB)
CD Player	
Sampling Frequency	32 times oversampling
Pick-Up Type	Astigma 3-beam
Light Source	Semiconductor Laser
Wavelength	780nm
Frequency Response	20Hz to 20,000Hz (±1dB)
Signal to Noise Ratio	96dB
Dimensions**	178×50×150mm
Weight**	1.4kg

* Specifications and the design are subject to possible modification without notice due to improvements.

** Dimensions and Weight shown are approximate.

⚠ WARNING

This service information is designed for experienced repair technicians only and is not designed for use by the general public. It does not contain warnings or cautions to advise non-technical individuals of potential dangers in attempting to service a product. Products powered by electricity should be serviced or repaired only by experienced professional technicians. Any attempt to service or repair the product or products dealt with in this service information by anyone else could result in serious injury or death.

IMPORTANT SAFETY NOTICE

There are special components used in this equipment which are important for safety. These parts are marked by ⚠ in the Schematic Diagrams, Circuit Board Diagrams, Exploded Views and Replacement Parts List. It is essential that these critical parts should be replaced with manufacturer's specified parts to prevent shock, fire or other hazards. Do not modify the original design without permission of manufacturer.

Panasonic®

© 2003 Matsushita Electric Industrial Co., Ltd. All rights reserved. Unauthorized copying and distribution is a violation of law.

CONTENTS

	Page
1 FEATUERS	**2**
2 LASER PRODUCTS	**2**
3 REPLACEING THE FUSE	**3**
4 MAINTENANCE	**3**
5 NOTES	**3**
6 DIMENSIONS	**3**
7 WIRING DIAGRAM	**4**
8 BLOCK DIAGRAM	**5**
8.1. Main / Key Block	5
8.2. CD Servo Block	6
9 WIRING CONNECTION	**7**
9.1. Main Block-1	7
9.2. Main Block-2	8
9.3. Display Block	9
9.4. CD SERVO Block	10
10 SCHEMATIC DIAGRAM	**11**
10.1. Main Block	11
10.2. Display Block	12
10.3. CD Servo Block-1	13
10.4. CD Servo Block-2	14
11 TERMINALS DESCRIPTION	**15**
11.1. Main Block	15
11.2. Display Block	15
11.3. CD Servo Block	15
12 PACKAGE AND IC BLOCK DIAGRAM	**18**
12.1. Main Block	18
12.2. Display Block	21
12.3. CD Servo Block	22
13 REPLACEMENT PARTS LIST	**24**
14 EXPLODED VIEW (Unit)	**29**
15 CD PLAYER PARTS LIST	**30**
16 EXPLODED VIEW (CD Deck)	**33**
17 PACKING PARTS LIST	**34**
18 SCHEMATIC DIAGRAM for printing with A4 size	**35**
18.1. Main Block (Left Side)	35
18.2. Main Block (Right Side)	36
18.3. CD SERVO Block-1 (Left Side)	37
18.4. CD SERVO Block-1 (Right Side)	38
18.5. CD SERVO Block-2 (Left Side)	39
18.6. CD SERVO Block-2 (Right Side)	40

1 FEATUERS

- PLL (Phase Locked Loop) synthesized tuning.
- 18-FM, 6-AM presets with preset scan
- Digital servo for reliable CD playback.
- Removable face plate.

2 LASER PRODUCTS

CAUTION:

This product utilizes a laser diode with the unit turned "on", laser radiation is emitted from the pickup lens.

Laser radiation from the pickup lens is safety level, but be sure the followings:

1. Do not disassemble the optical pickup unit, since radiation from exposed laser diode is dangerous.
2. Do not adjust the variable resistor on the pickup unit. It was already adjusted.
3. Do not look at the focus lens using optical instruments.
4. Recommend not to look at pickup lens for a long time.

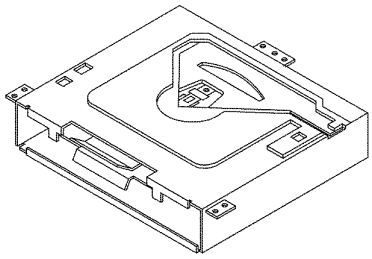

Deck Ass'y (Upper Side)

Caution
This Product utilizes a laser.
Use of controls or adjustments or performance of procedures other than those specified herein may result in hazardous radiation exposure.

3 REPLACEING THE FUSE

Use fuses of the same specified rating (15A). Using different substitutes or fuses with higher ratings, or connecting the product directly without a fuse, could cause fire or damage to the stereo unit.

4 MAINTENANCE

Your products is designed and manufactured to ensure a minimum of maintenance. Use a dry, a soft cloth for routine exterior cleaning. Never use benzine, thinner or other solvents.

5 NOTES

[RADIO BLOCK]

Do not align the AM/FM package block. When the package block is necessary, it will be supplied already aligned at the factory.

[CD DECK BLOCK]

This model has no servo alignment points because microcomputer controls the servo circuit.

6 DIMENSIONS

7 WIRING DIAGRAM

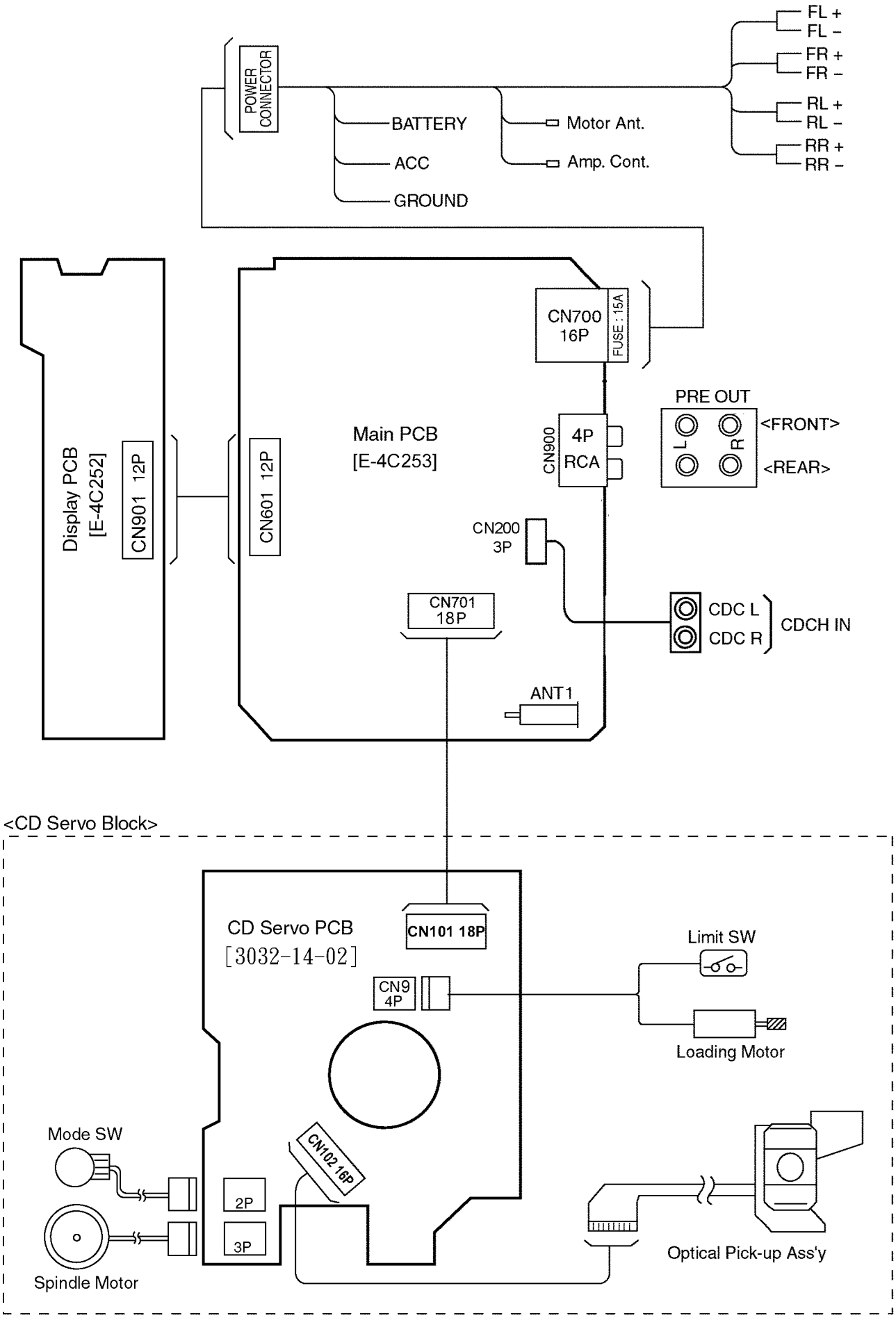

8 BLOCK DIAGRAM

8.1. Main / Key Block

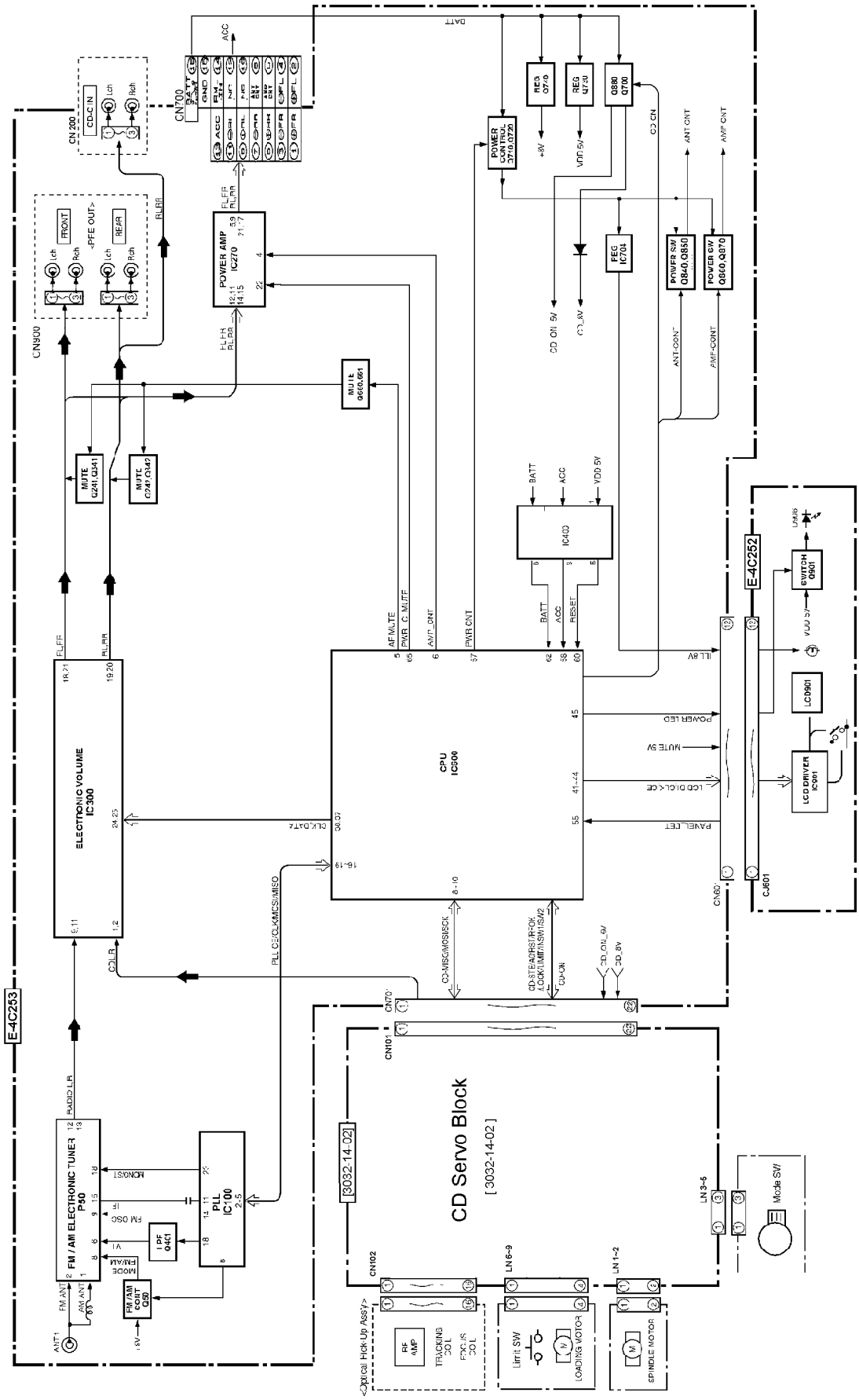

8.2. CD Servo Block

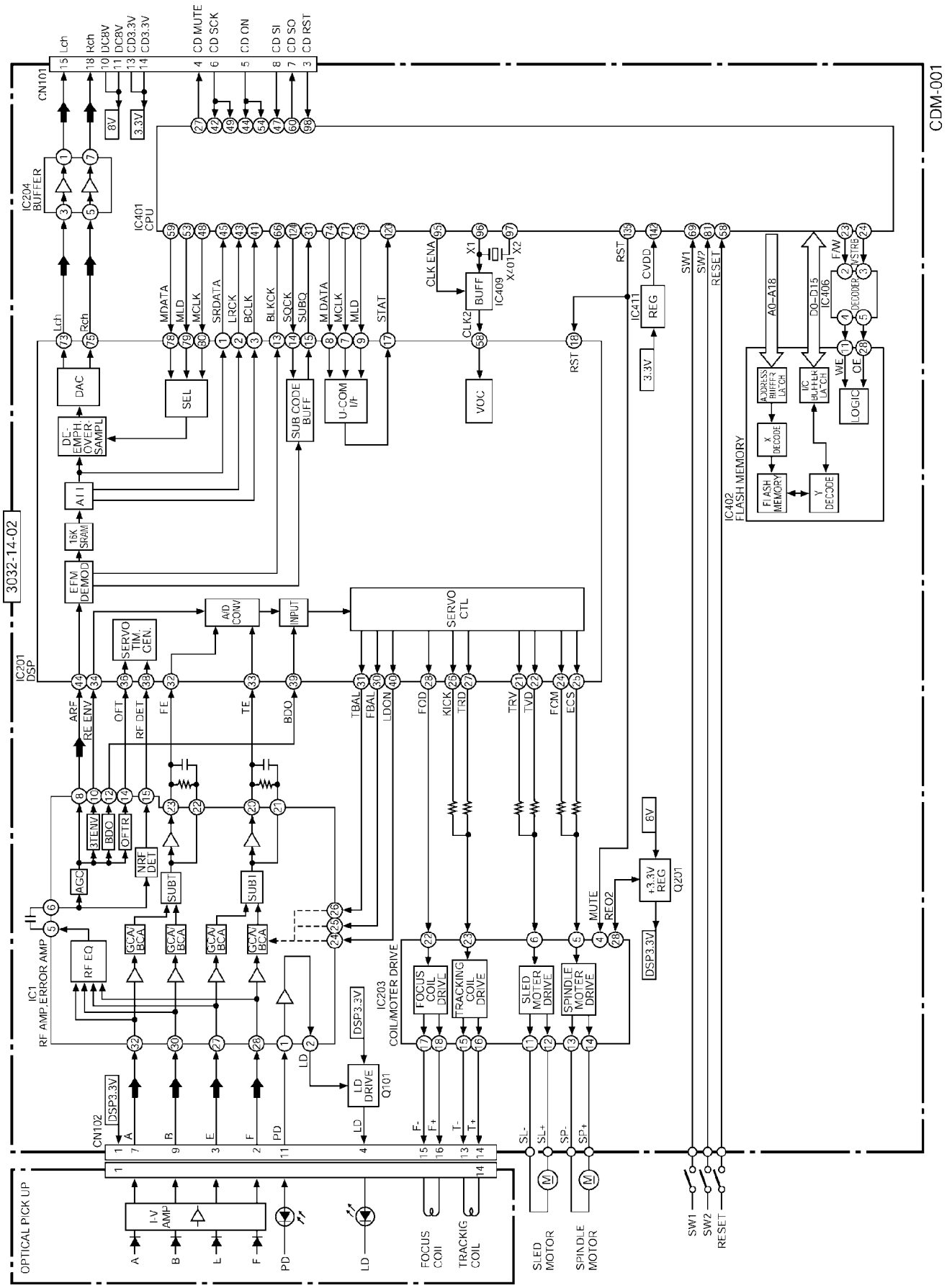

9 WIRING CONNECTION

9.1. Main Block-1

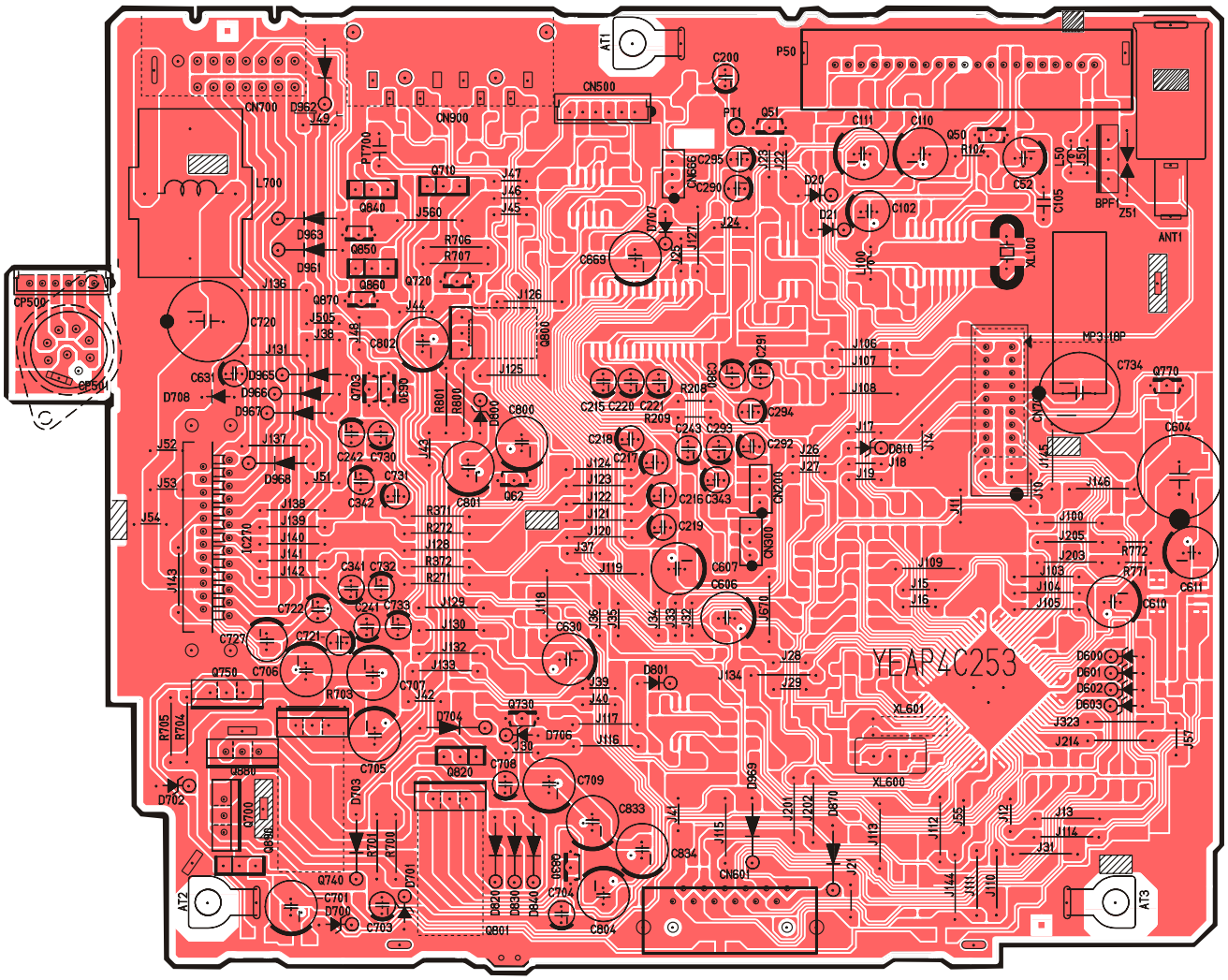

[E-4C253] [TOP VIEW]

CQ-DP383(U.W.WJ) Main PCB

9.2. Main Block-2

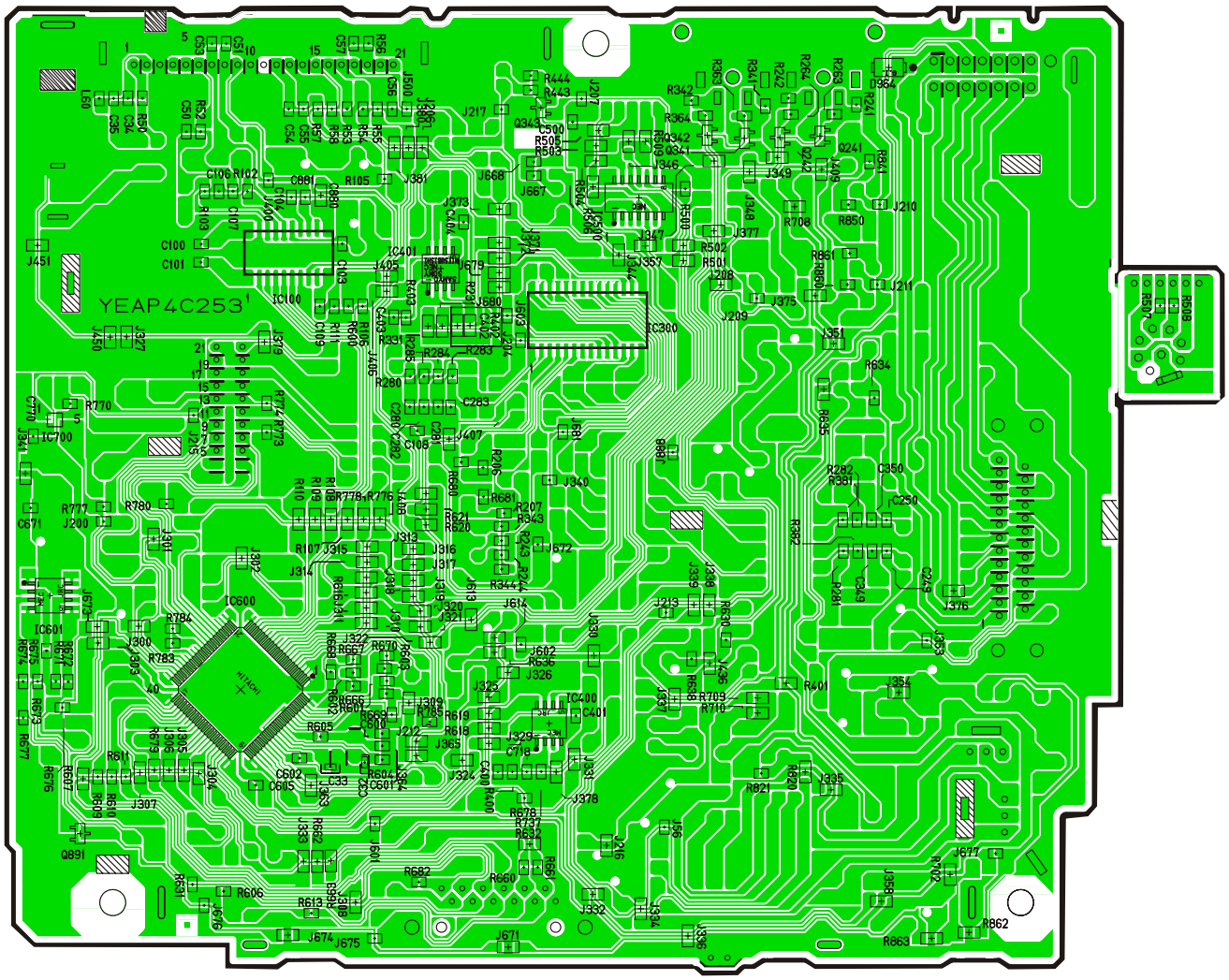

[E-4C253] [BOTTOM VIEW]

CQ-DP383 (U.W.WJ) Main PCB

9.3. Display Block

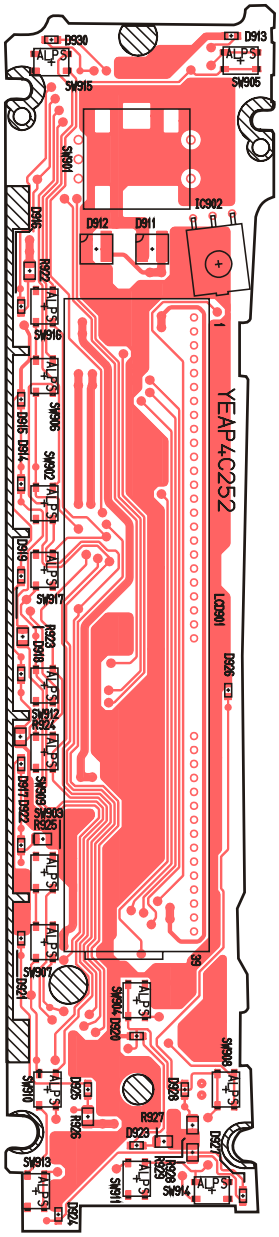

[E-4C252] [TOP VIEW]

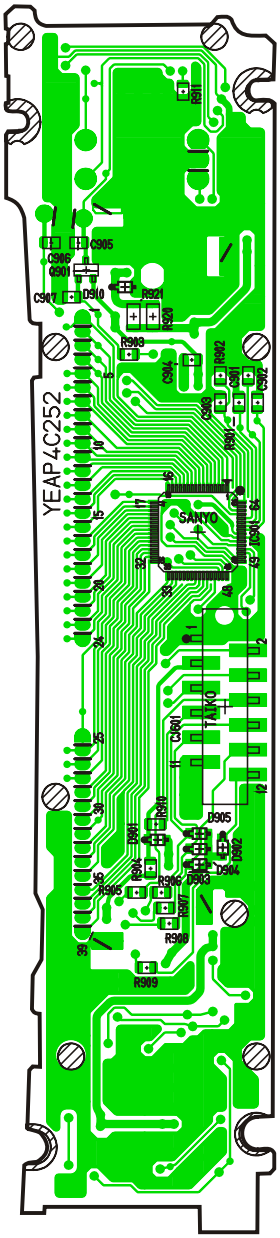

[E-4C252] [BOTTOM VIEW]

CQ-DP383 (U.W.WJ) Display PCB

9.4. CD SERVO Block

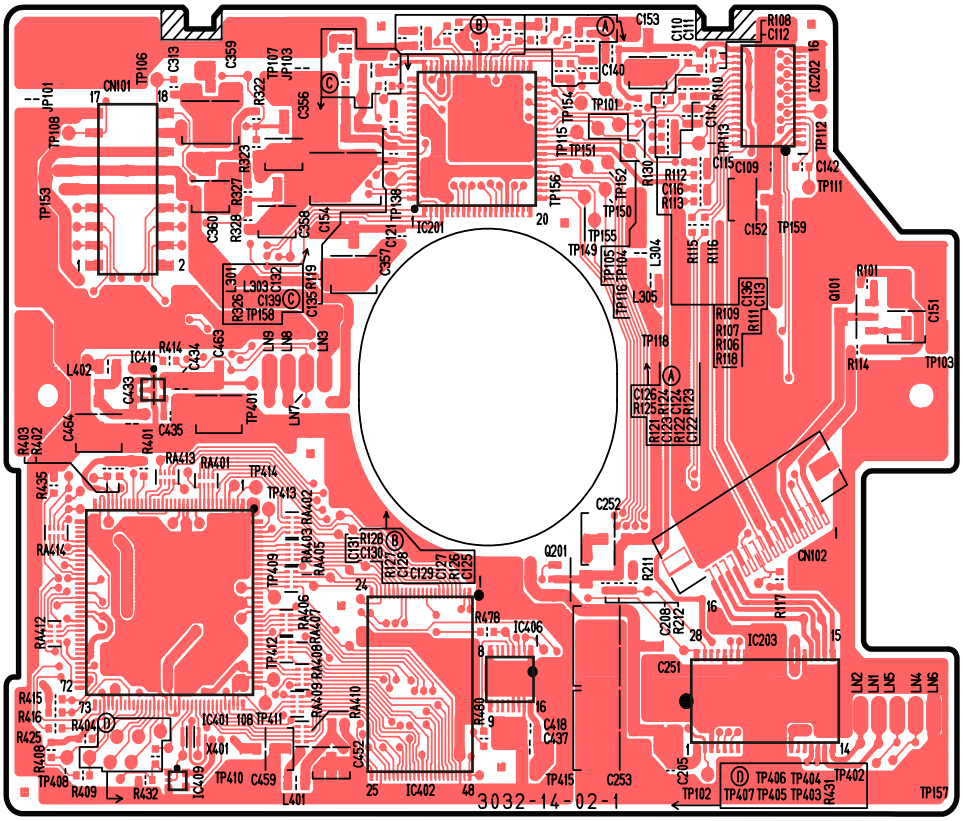

[3032-12-02] [TOP VIEW]

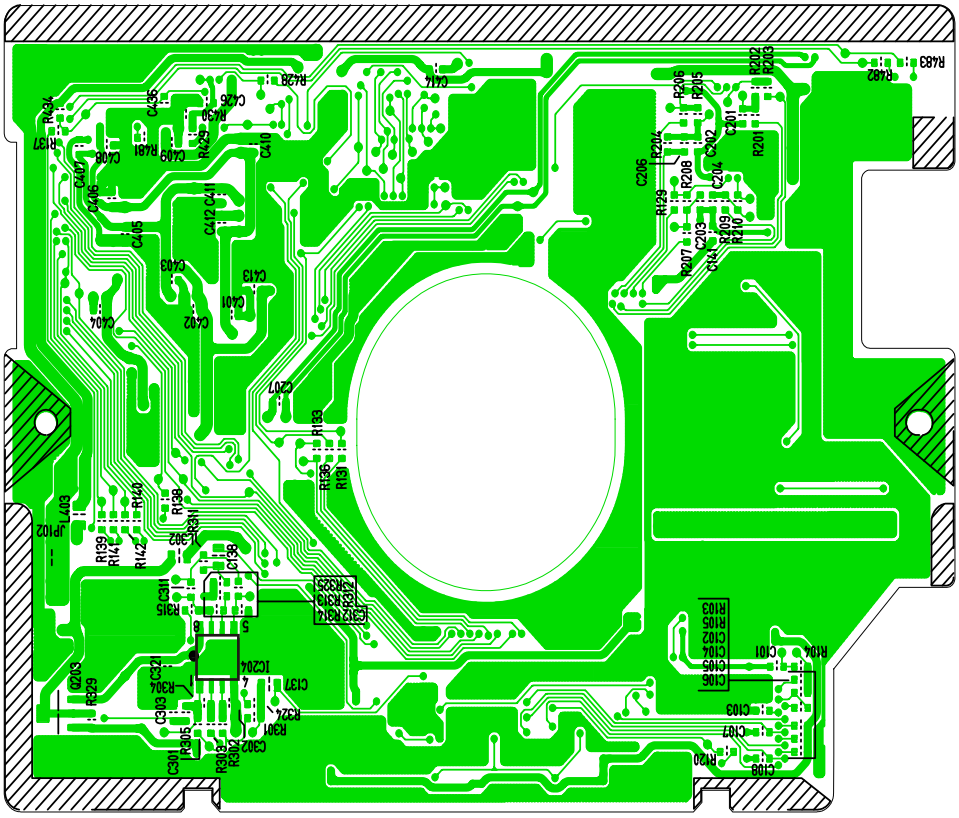

[3032-12-02] [BOTTOM VIEW]

CQ-DP383(U.W.WJ) CD SERVO PCB

10 SCHEMATIC DIAGRAM

10.1. Main Block

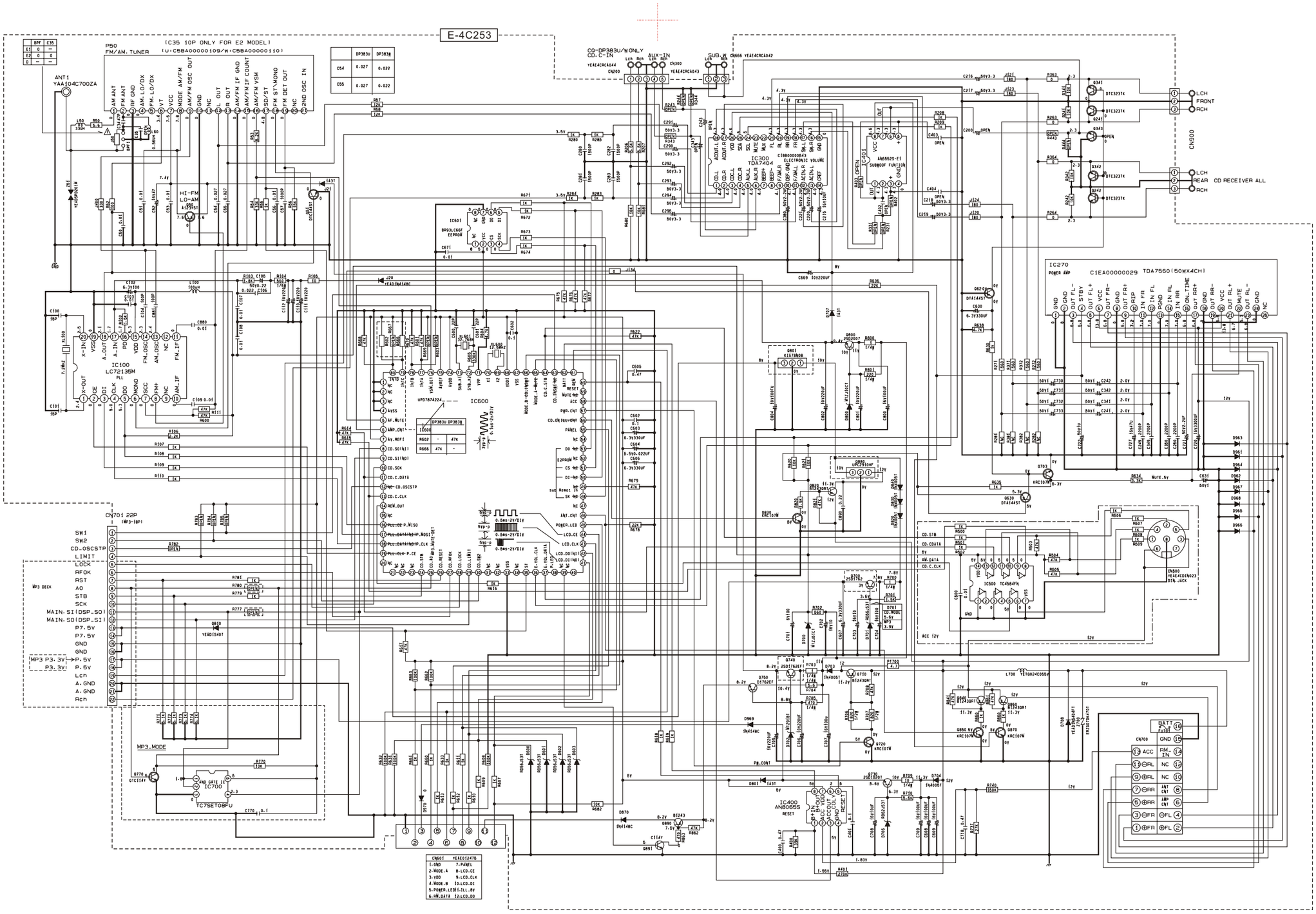

CQ-DP383(U.W.WJ) Main Block

10.2. Display Block

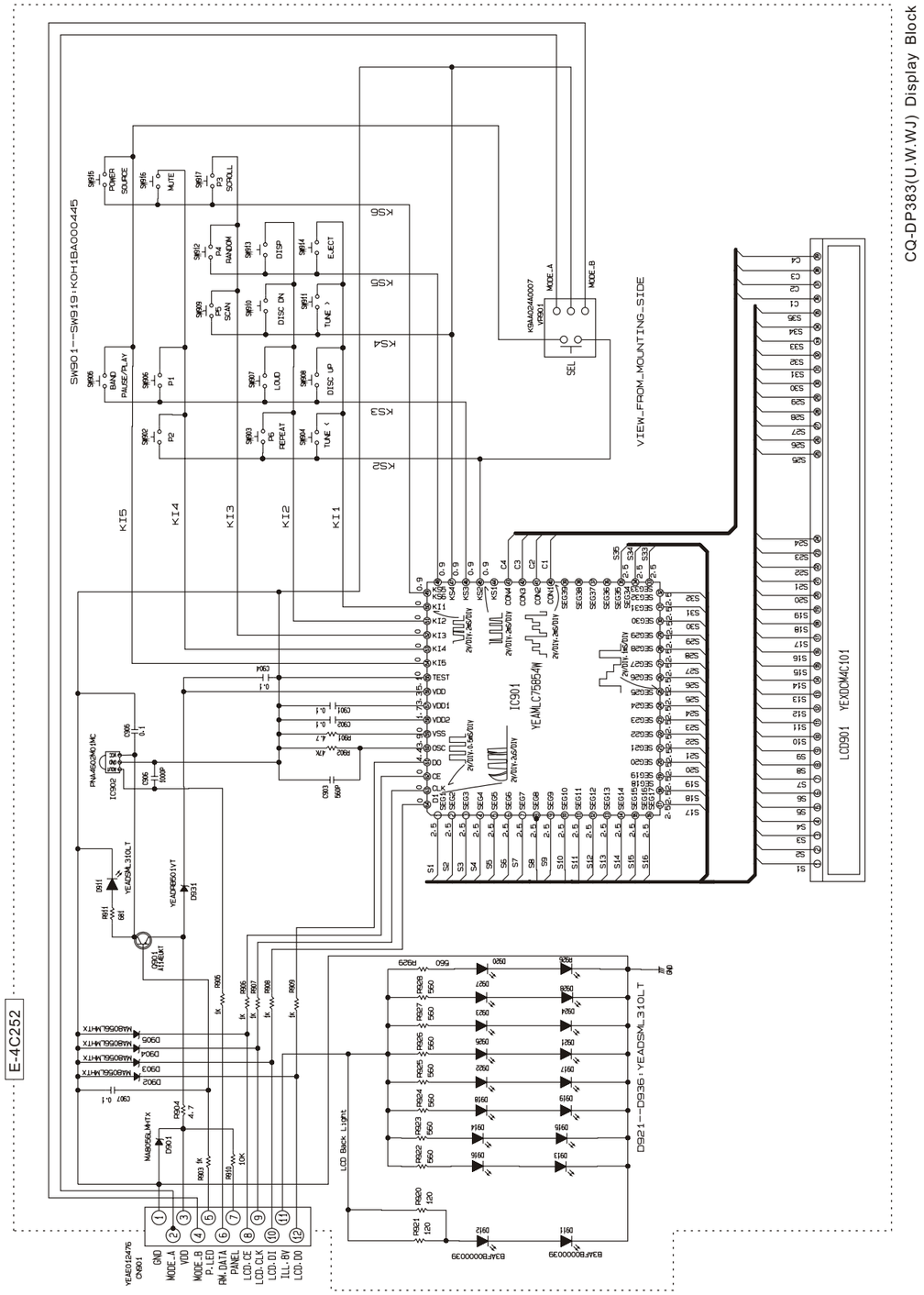

10.3. CD Servo Block-1

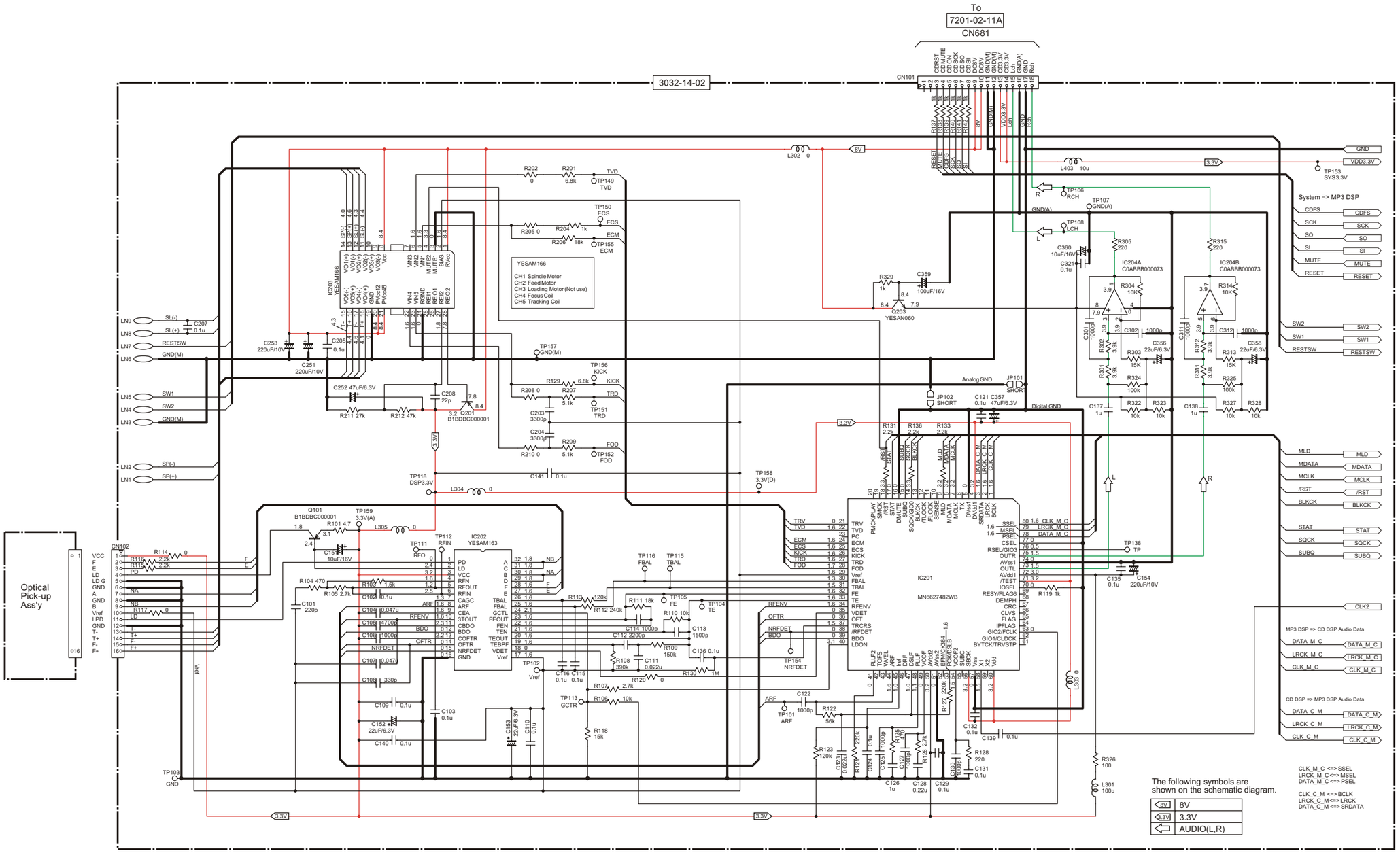

CQ-DP383(U.W.WJ) CD Servo Block-1

10.4. CD Servo Block-2

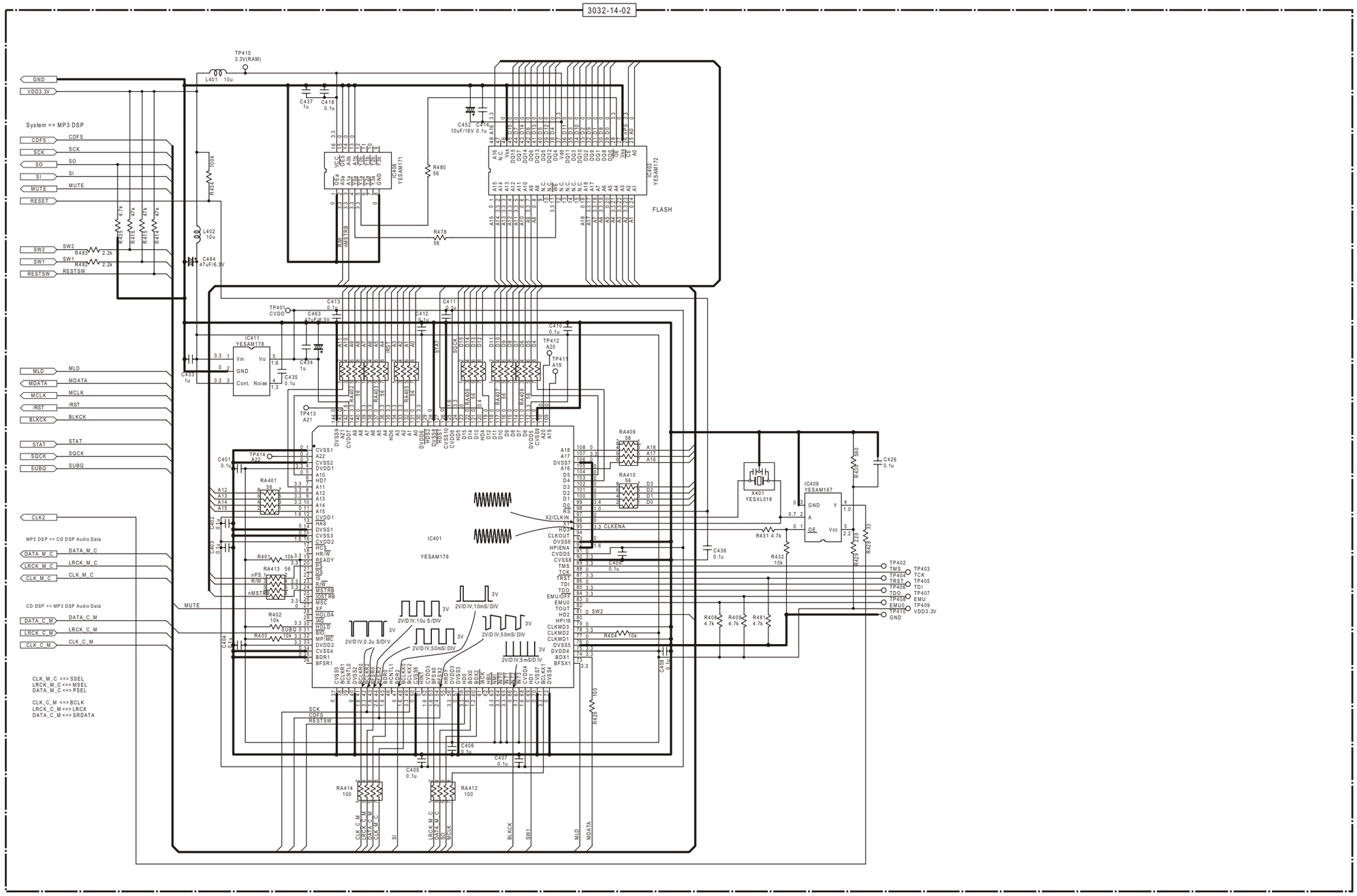

CQ-DP383(U.W.WJ) CD Servo Block-2

11 TERMINALS DESCRIPTION

11.1. Main Block

IC600 : UPD784224108

Pin No.	Port	Descriptions	I/O (V)	FM (V)	AM (V)	CD (V)
1	NC	(Connecting to ground)	-	0	0	0
2	NC	(Connecting to ground)	-	0	0	0
3	NC	(Connecting to ground)	-	0	0	0
4	AVSS	Analog ground	-	0	0	0
5	AF MUTE	AF mute	O	5.1	5.1	5.2
6	AMP-CNT	Power Amp. stand-by	O	5.1	5.1	5.2
7	AVREF	Reference voltage	-	5.1	5.1	5.2
8	CD-MISO	CD data	I	0	0	0
9	CD-MOSI	CD data	O	0	0	2.4
10	CD-SCK	CD clock	O	0	0	5.1
11	CD.C DATA	Not used	-	-	-	-
12	NC	No connection	-	-	-	-
13	CD.C CLK	Not used	-	-	-	-
14	REM OUT	Not used	-	-	-	-
15	BZOUT	Not used	-	-	-	-
16	PLL-MISO	Data from PLL	I	5.1	5.1	5.1
17	PLL-MOSI	Data for PLL	O	0	0	0
18	PLL-CLK	Clock for PLL	O	5.1	5.1	5.2
19	PLL-CE	PLL chip enable	O	0	0	0
20	NC	No connection	-	-	-	-
21	NC	No connection	-	-	-	-
22	NC	No connection	-	-	-	-
23	NC	No connection	-	-	-	-
24	CD-STB	CD strobe	O	0	0	5.1
25	CD-A0	CD address 0	O	0	0	4.4
26	CD-RST	CD reset	O	0	0	5.1
27	CD-RFOK	CD RFOK signal	I	0	0	5.0
28	CD-LOCK	CD lock signal	I	0	0	5.0
29	CD-LIMIT	CD limit sw	I	0	0	5.1
30	CD-SW2	CD SW2	I	5.1	5.1	0
31	NC	No connection	-	-	-	-
32	NC	No connection	-	-	-	-
33	Vss	Ground	-	0	0	0
34	S.LED	Not used	-	-	-	-
35	ST-IND	FM stereo detection	I	5.0	5.1	5.1
36	IC2-CLK	Electronic volume clock	O	5.1	5.1	5.2
37	IC2-DATA	Electronic volume data	I/O	5.1	0	5.2
38	NC	No connection	-	-	-	-
39	NC	No connection	-	-	-	-
40	NC	No connection	-	-	-	-
41	LCD-MOSI	LCD data output	O	0	0	0
42	LCD-MISO	LCD data input	I	5.0	5.0	5.0
43	LCD-CLK	LCD clock	O	0	0	0
44	LCD-CE	LCD chip enable output	O	0	0	0
45	POWER LED	Pilot lamp on	O	0	0	0
46	ANT.CONT	Motor antenna control	O	5.1	5.1	0
47	NC	No connection	-	-	-	-
48	NC	No connection	-	-	-	-
49	REM-IN_SUB	Remote control sig. sampling	I	0	4.4	4.4
50	NC	No connection	-	-	-	-
51	NC	No connection	-	-	-	-
52	NC	No connection	-	-	-	-
53	NC	No connection	-	-	-	-
54	TEL-MUTE	Not used	-	-	-	-
55	PANEL-DET	Panel detect	I	0	4.8	4.9
56	CD-ON	CD power control	O	0	0	5.1
57	PWR CNT	Power control	O	5.0	5.0	5.0
58	ACC-DET	ACC detection	I	5.1	5.1	5.1
59	MUTE	MUTE	0	5.1	5.1	5.1
60	/RESET	Reset input	I	5.1	5.1	5.1
61	REM	Remocon data input	I	4.4	4.4	4.4
62	BATT	Battery detection	I	5.1	5.1	5.1
63	CD SW1	CD SW1	I	0	0	0
64	CD.C.STB	(Ground pull-down)	I	0	0	0
65	MODE A	MODE A	I	0	0	0
66	MODE B	MODE B	I	0	0	0
67	VSS	Ground	-	0	0	0
68	VDD	+5V power supply	-	5.1	5.1	5.1
69	X2	Crystal oscillator	-	3.1	3.1	3.1
70	X1	Crystal oscillator	-	2.2	2.2	2.2
71	Vpp	(Ground pull-down)	-	0	0	0
72	SUB-X2	Crystal oscillator	-	3.1	3.1	3.1
73	SUB-X1	Crystal oscillator	-	2.5	2.5	2.5
74	AVDD	+5V power supply	-	5.1	5.1	5.1
75	AVREF	(Connecting to VDD)	-	5.1	5.1	5.1
76	VSM_DET	S-meter detection	I	0	0	0
77	INIT A	Initial value A	I	0	0	0
78	INIT B	Initial value B	I	0	0	0
79	INIT C	Initial value C	I	0	0	0
80	INIT D	Initial value D	I	0	0	0

Note 1 :

Voltage measuerments are with respect to ground, with a voltmeter (internal resistance : 10M ohms).

11.2. Display Block

IC901 : YEAMLC75854W

Pin No.	Port	Descriptions	I/O (V)	(V)
1-35	SEG1-35	LCD segment	O	2.5
36-39	NC	No connection	-	-
40-43	COM1-4	LCD common	O	2.5
44-49	KS1-6	Key data output	O	0.9
50-54	KI1-5	Key data input	I	0
55	TEST	(Connecting to ground)	-	0
56	VDD	+5V power supply	-	5.1
57	VDD1	Ground through capacitor	-	3.3
58	VDD2	Ground through capacitor	-	1.7
59	Vss	Ground	-	0
60	OSC	CR oscillator	-	3.9
61	DO	Key data output	O	4.4
62	CE	Chip enable	I	0
63	CLK	LCD clock	I	0
64	DI	LCD data input	I	0

11.3. CD Servo Block

IC401 : YESAM176

Pin No.	Port	Descriptions	I/O	(V)
1	CVSS1	GND	-	0
2	-	-	-	-
3	CVSS2	GND	-	0
4	DVSS1	I/O system (3.3V) power supply	-	3.3
5	A10	Address bus of FLASH ROM	O	0
6	-	-	-	-
7	A11	Address bus of FLASH ROM	O	3.3
8	A12		O	3.3
9	A13		O	3.3
10	A14		O	3.3
11	A15		O	3.3
12	/CVDD1	CORE CPU system (1.6V) power supply	-	1.6
13	-	-	-	-
14	DVSS1	GND	-	0
15	CVSS3	GND	-	0
16	/CVDD2	I/O system (3.3V) power supply	-	1.6
17	-	-	-	-

Pin No.	Port	Descriptions	I/O	(V)
18	-	-	-	-
19	-	-	-	-
20	nPS	FLASH ROM selection signal	O	3.3
21	-	-	-	-
22	-	-	-	-
23	R/W	Lead/light signal to FLASH ROM	O	3.3
24	nMSTRB	Memory access signal	O	3.3
25	-	-	-	-
26	-	-	-	-
27	MUTE	Mute signal output (H:Mute on)	O	0
28	-	-	-	-
29	-	-	-	-
30	-	-	-	-
31	SUBO	SUBO input	I	0
32	-	Operation mode setting (external pull-up)	I	3.3
33	DVDD2	I/O system (3.3V) power supply	-	3.3
34	CVSS4	GND	-	0
35	(GND)	GND	I	0
36	-	-	-	-
37	CVSS5	GND	-	0
38	-	-	-	-
39	-	-	-	-
40	DVSS2	GND	-	0
41	CLK C M	AUDIO bit clock input	I	1.6
42	SCK	Clock input	I	3.3
43	LRCK C M	AUDIO L/R identifying signal input	I	1.6
44	CDFS	Serial frame sink signal input	I	2.6
45	DATA M C	AUDIO serial data input	I	1.6
46	-	-	-	-
47	SI	Serial data input	I	0
48	CLK M C	AUDIO bit clock output	O	1.6
49	SCK	Clock input	I	3.3
50	CVSS6	GND	-	0
51	-	-	-	-
52	CVDD3	CORE CPU system (1.6V) power supply	-	1.6
53	LRCK M C	AUDIO L/R identifying signal output	O	1.6
54	CDFS	Serial frame sink signal input	I	2.4
55	-	-	-	-
56	DVDD3	I/O system (3.3V) power supply	-	3.3
57	DVSS3	GND	-	0
58	REST SW	Mechanics deck REST SW input	I	3.3
59	DATA M C	AUDIO serial data output	O	1.6
60	SO	Serial data output	O	1.2
61	-	-	-	-
62	-	-	-	-
63	-	-	-	-
64	-	-	-	-
65	-	-	-	-
66	BLKCK	Subcode block clock pulse input	I	0
67	-	-	-	-
68	DVDD4	CORE CPU system (1.6V) power supply	-	1.6
69	SW1	Mechanics deck SW1 input	I	0
70	CVSS7	GND	-	0
71	MCLK	Clock output (To Servo DSP)	O	3.3
72	DVSS4	GND	-	0
73	MLD	Command load signal output (To Servo DSP)	I	3.3
74	MDATA	Command data output (To Servo DSP)	O	3.3
75	DVDD4	I/O system (3.3V) power supply	-	3.3
76	DVSS5	GND	-	0
77	-	Clock mode setting (L fixation)	I	0

Pin No.	Port	Descriptions	I/O	(V)
78	-	Clock mode setting (H fixation)	I	3.3
79	-	Clock mode setting (L fixation)	I	-
80	-	-	-	-
81	SW2	Mechanics deck SW2 input	I	0
82	-	-	-	-
83	-	-	-	-
84	-	-	-	-
85	-	-	-	-
86	-	-	-	-
87	-	-	-	-
88	-	-	-	-
89	-	-	-	-
90	CVSS8	GND	-	3.3
91	CVDD5	CORE CPU system (1.6V) power supply	-	0
92	(GND)	GND	I	1.6
93	DVSS6	GND	-	0
94	-	-	-	-
95	CLKENA	Oscillation output Cainabl signal	O	3.3
96	1	Crystal Connection	O	0
97	2	Crystal Connection	I	0
98	(VDD)	Reset signal input	I	1
99	D0	Data base of FLASH ROM	I/O	3.4
100	D1		I/O	0
101	D2		I/O	0
102	D3		I/O	0
103	D4		I/O	0
104	D5		I/O	0
105	A16	Address bus of FLASH ROM	O	0
106	DVSS7	GND	-	0
107	A17	Address bus of FLASH ROM	O	3.3
108	A18		O	0
109	A19	Address bus of FLASH ROM	O	0
110	A20		O	0
111	CVSS9	GND	-	0
112	DVDD5	I/O system (3.3V) power supply	-	3.3
113	D6	Data bus of FLASH ROM	I/O	0
114	D7		I/O	0
115	D8		I/O	0
116	D9		I/O	0
117	D10		I/O	0
118	D11		I/O	0
119	D12		I/O	0
120	STAT	Status signal input	I	0.4
121	D13	Data path of FLASH ROM	I/O	0
122	D14		I/O	0
123	D15		I/O	0
124	SQCK	SOCK clock output(To Servo DPS)	O	3.2
125	CVDD6	CORE CPU system (1.6V) power supply	-	1.6
126	CVSS10	GND	-	0
127	-	-	-	-
128	DVSS8	I/O system (3.3V) power supply	-	0
129	-	-	-	-
130	DVDD6	I/O system (3.3V) power supply	-	3.3
131	A0	Address bus of FLASH ROM	O	0
132	A1		O	0
133	A2		O	3.3
134	A3		O	3.3
135	/RST	Reset signal output(To Servo DSP)	O	3.3
136	A4	Address bus of FLASH ROM	O	3.3
137	A5		O	0
138	A6		O	3.3
139	A7		O	3.3
140	A8		O	0
141	A9		O	3.3

Pin No.	Port	Descriptions	I/O	(V)
142	CVDD7	CORE CPU system (1.6V) power supply	-	1.6
143	-	-	-	-
144	DVSS9	GND	-	0

12 PACKAGE AND IC BLOCK DIAGRAM

12.1. Main Block

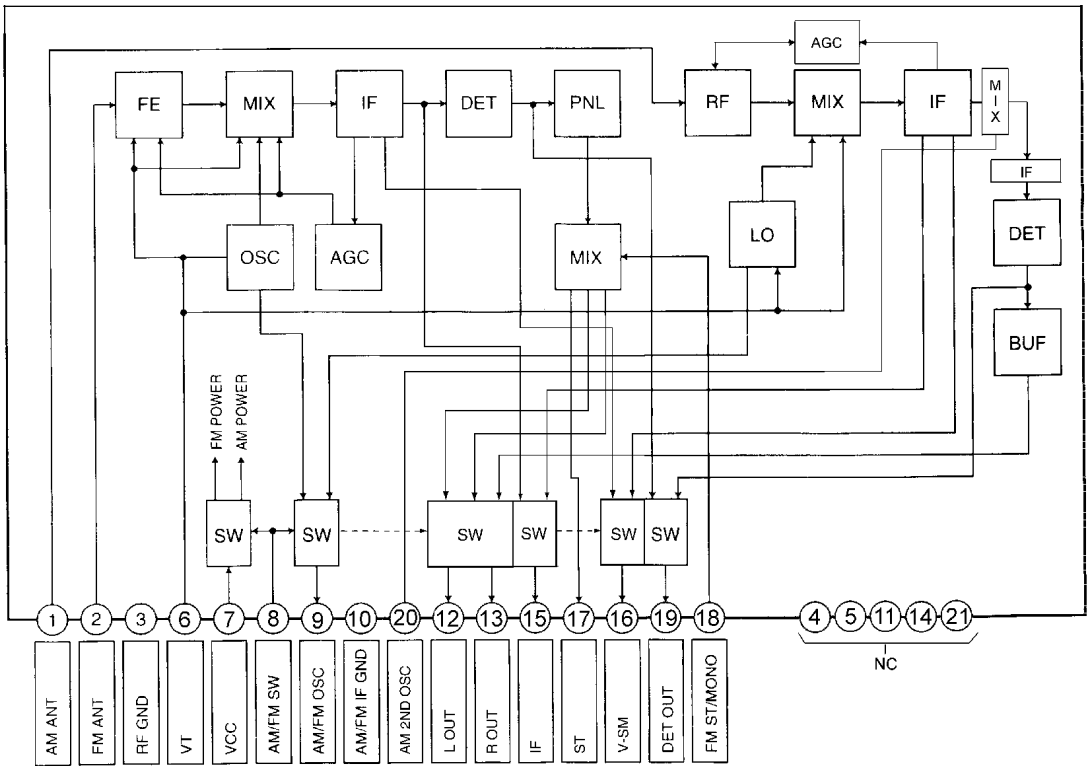

P50：C5BA00000109

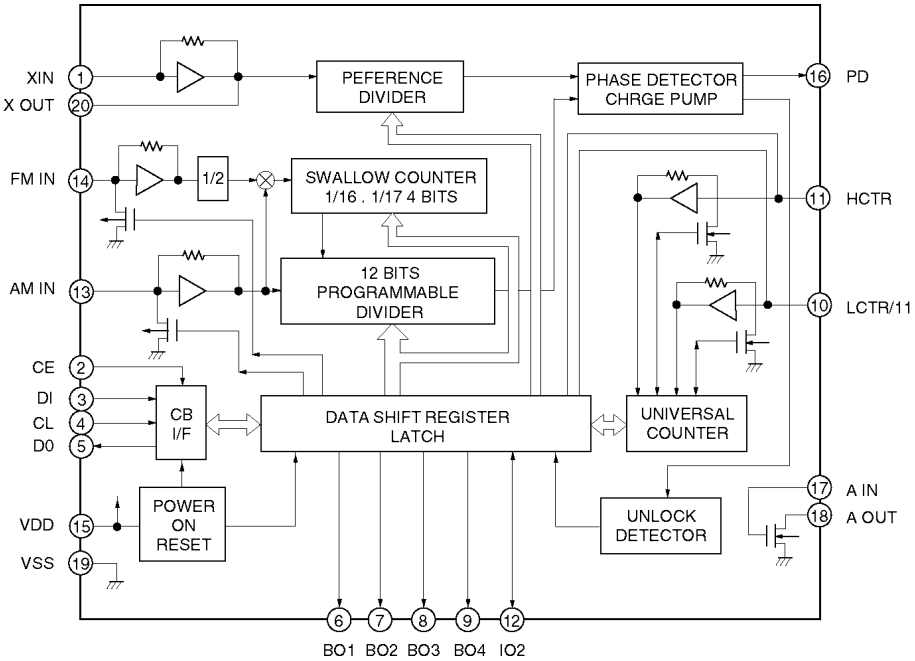

IC100：YEAMLC72135M

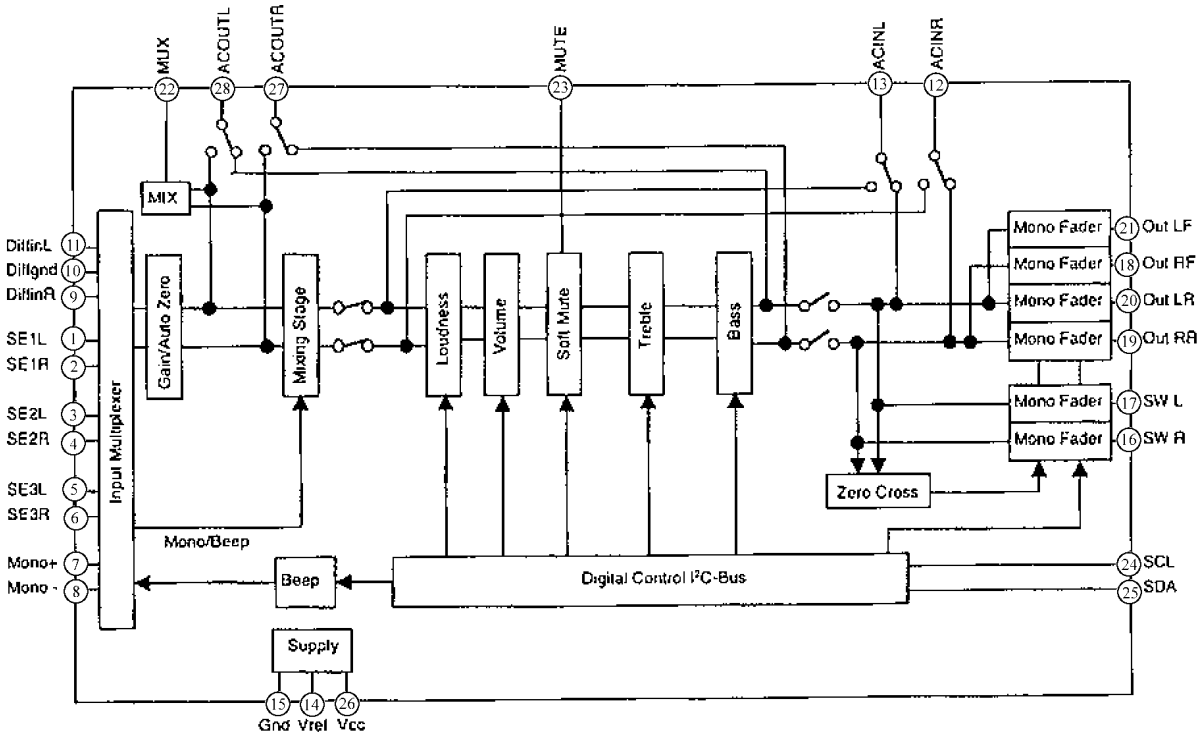

IC300 : C1BB00000543

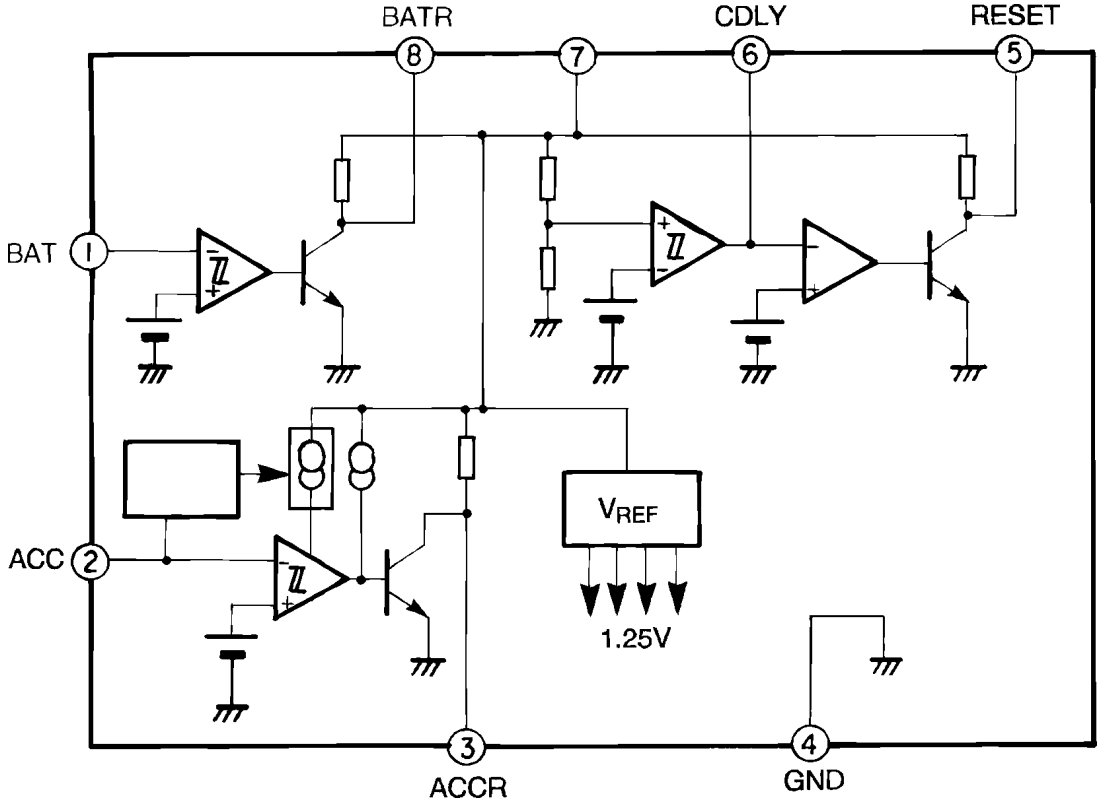

IC400 : AN8065S_E1

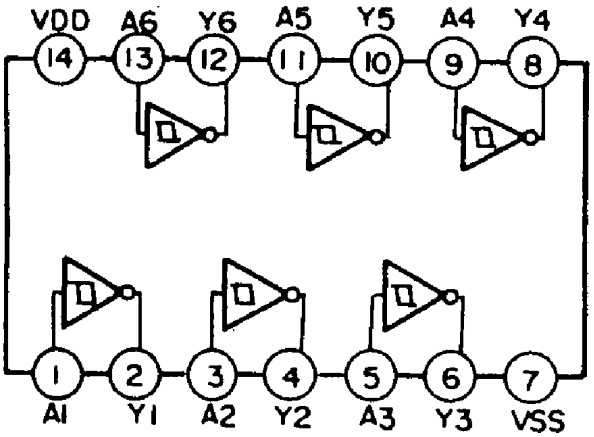

IC500 : YEAMTC4584FN

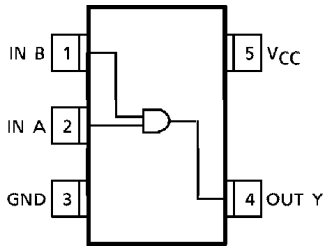

IC700 : C0JBAA000115

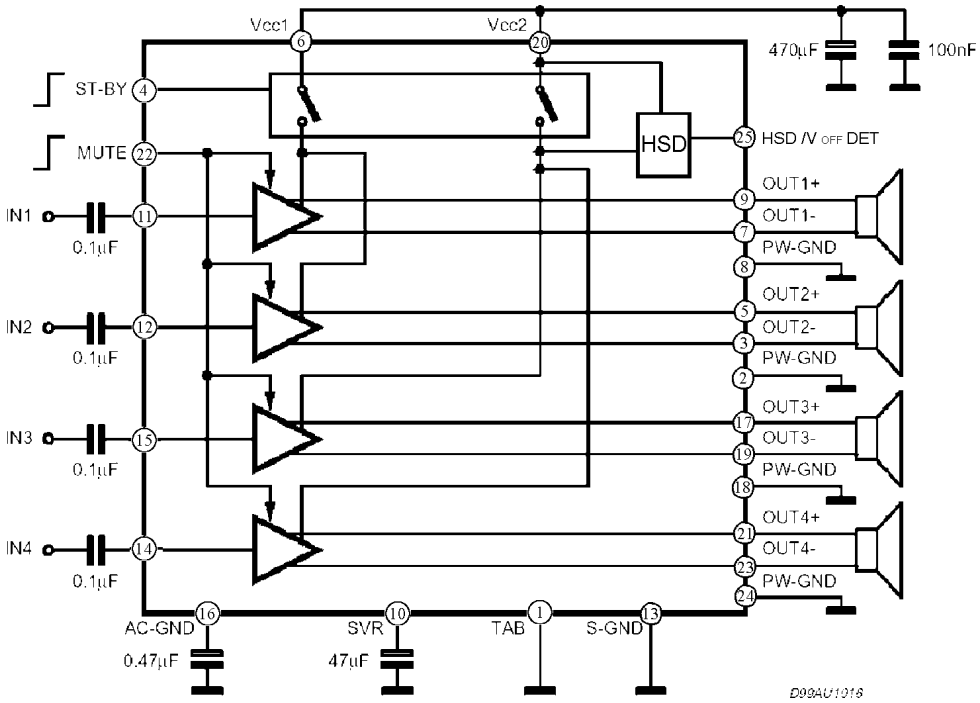

IC270 : C1EA00000029

12.2. Display Block

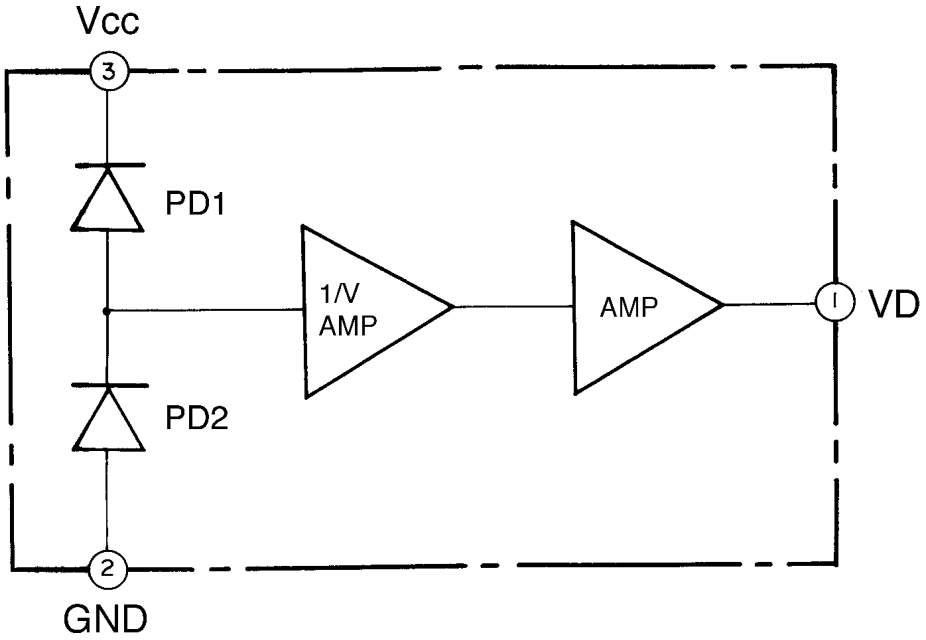

IC902 : PNA4602M01MC

12.3. CD Servo Block

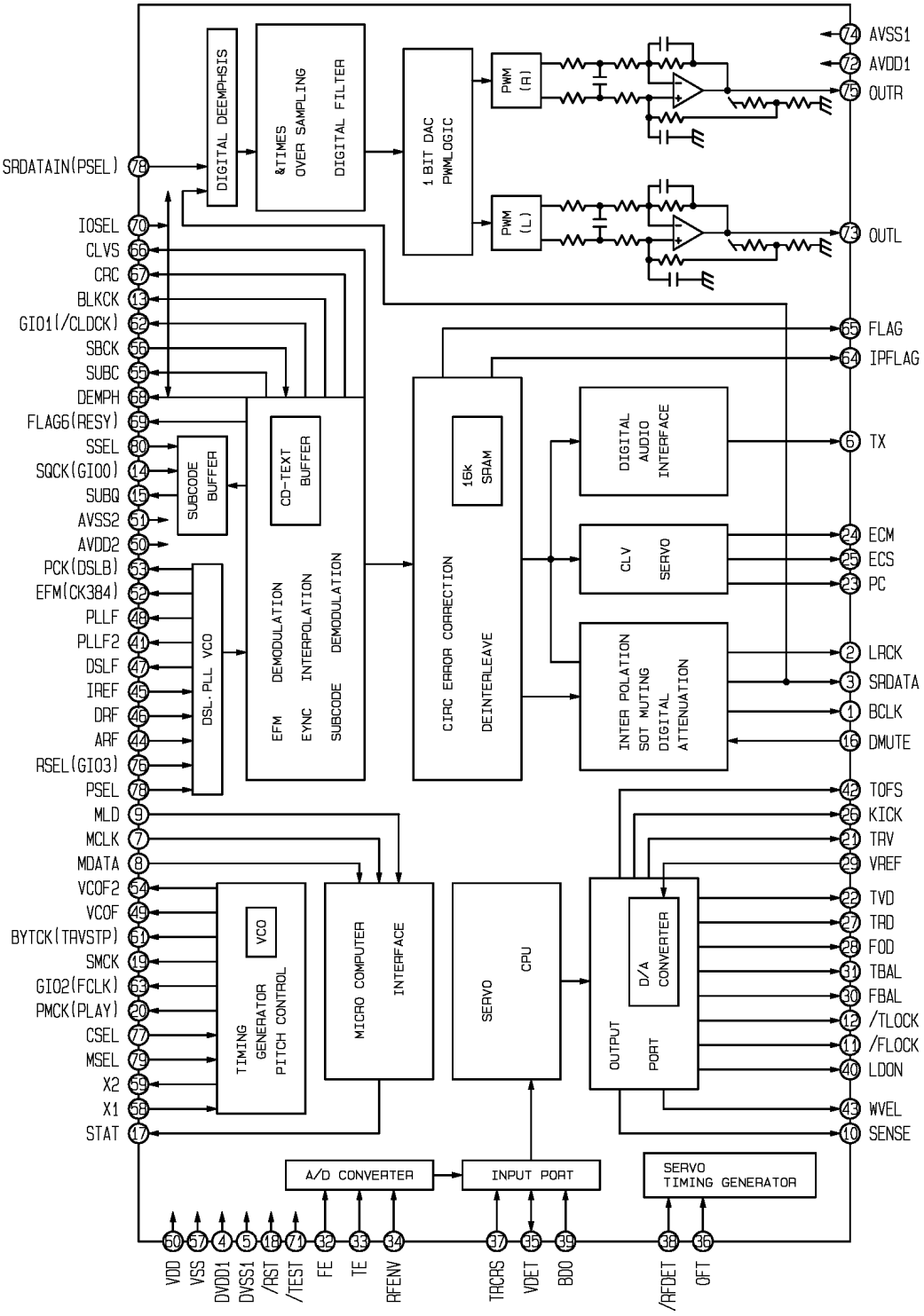

IC201 : MN6627482WB

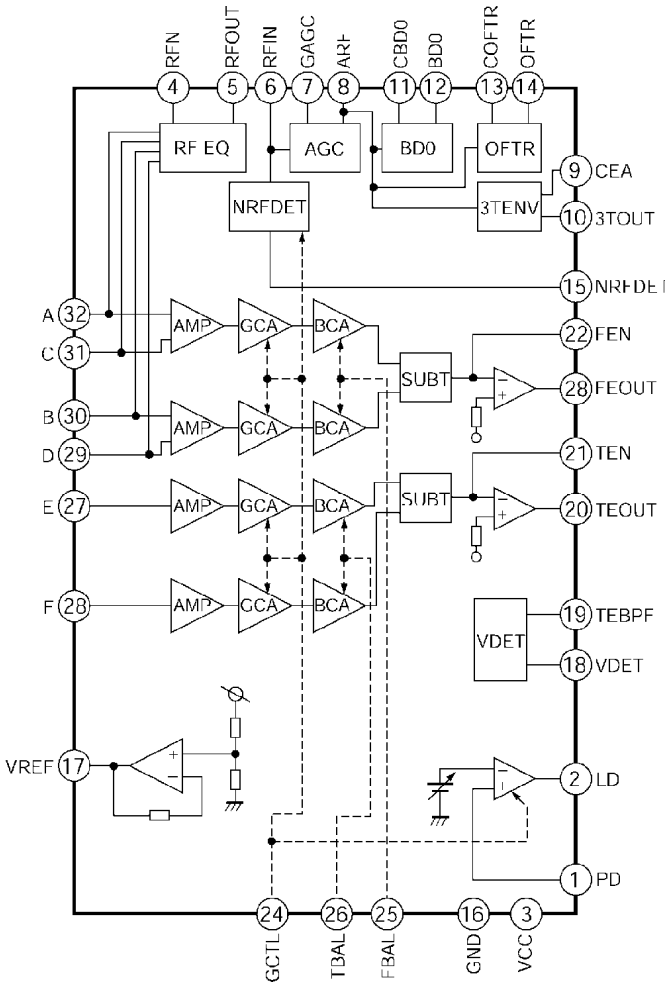

IC202 : YESAM163

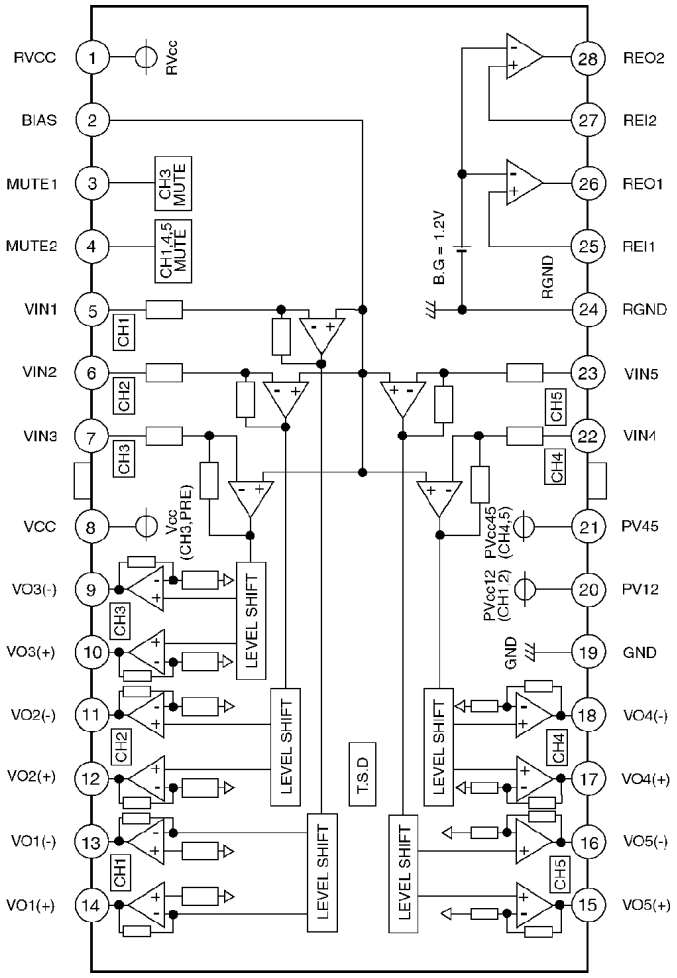

IC203 : YESAM166

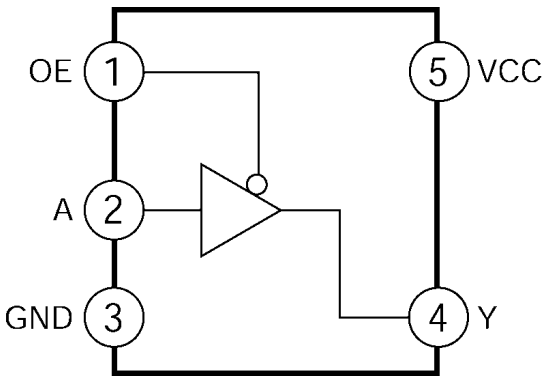

IC409 : YESAM167

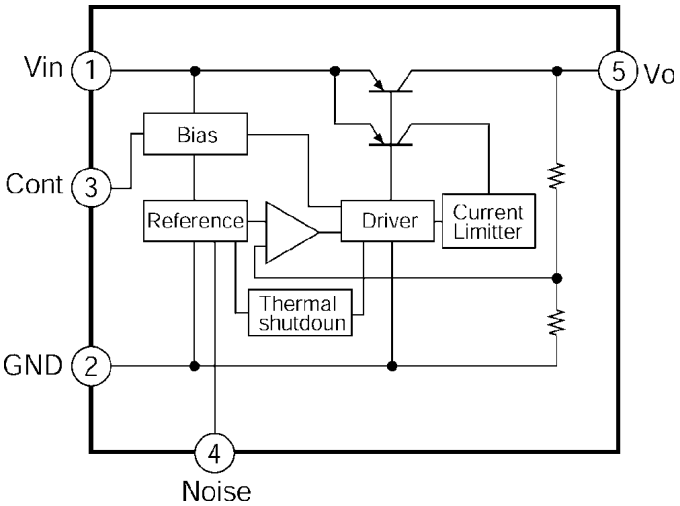

IC411 : YESAM178

13 REPLACEMENT PARTS LIST

Note:

1. Be sure to make your orders of replacement parts according to this list.
2. Important safty notice: Component , indentified by ⚠ mark have special characteristics important for safety. when replacing any of these components, use only manufacturer's specified parts.
3. Location keys in the remarks column indicates the general location of the parts shown in the exploded drawing. as in a load map.
4. The marking (RTL) indicates that Retention Time is limited for this item. After the discontinuation of assembly in production, the item will continue to be availability is dependent on the type of assembly, and in accordance with the laws governing part and product retention. Aft the end of this period, the assembly will no longer be available.
5. "T" marks in remarks colum are indicated supply parts of TAMACO.

▪ Order intake period is basically six months after the first shipment

Ref. No.	Part No.	Part Name & Description	Remarks
1.1. IC's and Transistors			
MAIN BLOCK [E-4C253]			
IC100	YEAMLC72135M	IC	T
IC270	C1EA00000029	IC	T
IC300	C1BB00000543	IC	T
IC400	AN8065S-E1	IC	T
IC500	YEAMTC4584FN	IC	T
IC600	UPD784225108	IC	T
IC700	C0JBAA000115	IC	T
P50	C5BA00000109	Tuner	T
Q50	YEANA123YSAT	Transistor	T
Q51	YEANDTC144ST	Transistor	T
Q62	YEANDTA144ST	Transistor	T
Q241	YEANDTC323TK	Transistor	T
Q242	YEANDTC323TK	Transistor	T
Q341	YEANDTC323TK	Transistor	T
Q342	YEANDTC323TK	Transistor	T
Q630	YEANDTA144ST	Transistor	T
Q700	YEAND1762EF	Transistor	T
Q703	YEANKRC107M	Transistor	T
Q710	YEANB1243QRT	Transistor	T
Q720	YEANKRC107M	Transistor	T
Q730	YEAN2SD1020T	Transistor	T
Q740	YEAND1762EF	Transistor	T
Q750	YEAND1762EF	Transistor	T
Q770	YEANDTC114ST	Transistor	T
Q800	YEAN2SD2007T	Transistor	T
Q801	YEAMKIA7808	Transistor	T
Q820	YEANB1243QRT	Transistor	T
Q830	YEANKRC107M	Transistor	T
Q840	YEANB1243QRT	Transistor	T
Q850	YEANKRC107M	Transistor	T
Q860	YEANB1243QRT	Transistor	T
Q870	YEANKRC107M	Transistor	T
Q880	C0CAAJG00005	Transistor	T
Q890	YEANB1243QRT	Transistor	T
Q891	YEANC114EKTX	Transistor	T
DISPLAY BLOCK [E-4C252]			
IC901	YEAMLC75854W	IC	T
IC902	PNA4602M01MC	IC	T
Q901	YEANA114EKTX	Transistor	T
1.2. Diodes			
MAIN BLOCK [E-4C253]			
D20	YEAD1N4148C	Diode	T
D21	YEAD1A3T	Diode	T
D600	YEADRD56JS3T	Zener Diode	T
D601	YEADRD56JS3T	Zener Diode	T
D602	YEADRD56JS3T	Zener Diode	T
D603	YEADRD56JS3T	Zener Diode	T
D700	YEADMTZJ51CT	Zener Diode	T
D701	YEADMTZJ39BT	Zener Diode	T
D702	YEADMTZJ91BT	Zener Diode	T
D703	YEAD1N4005ST	Silicon Diode	T
D704	YEAD1N4005ST	Silicon Diode	T
D706	YEADRD62JS3T	Zener Diode	T
D707	YEAD1A3T	Diode	T
D708	YEAD1N5404FT	Diode	T
D800	YEADMTZJ10CT	Zener Diode	T
D801	YEAD1A3T	Diode	T
D810	YEAD1S40T	Diode	T
D820	YEAD1N4005ST	Silicon Diode	T
D830	YEAD1N4005ST	Silicon Diode	T
D840	YEAD1N4005ST	Silicon Diode	T
D870	YEAD1N4005ST	Silicon Diode	T
D961	YEAD1N4005ST	Silicon Diode	T
D962	YEAD1N4005ST	Silicon Diode	T
D963	YEAD1N4005ST	Silicon Diode	T
D964	YEADSR1544TL	Diode	T
D965	YEAD1N4005ST	Silicon Diode	T
D966	YEAD1N4005ST	Silicon Diode	T
D967	YEAD1N4005ST	Silicon Diode	T
D968	YEAD1N4005ST	Silicon Diode	T
D969	YEAD1N4148C	Diode	T
Z51	YEADYP201M	Diode	T
DISPLAY BLOCK [E-4C252]			
D901	YEADUDZ56BT	Zener Diode	T
D902	YEADUDZ56BT	Zener Diode	T
D903	YEADUDZ56BT	Zener Diode	T
D904	YEADUDZ56BT	Zener Diode	T
D905	YEADUDZ56BT	Zener Diode	T
D911	B3AFB0000039	LED WHITE(LWA67C)	T
D912	B3AFB0000039	LED WHITE(LWA67C)	T
D913	YEADSML310LT	LED(RED)	T
D914	YEADSML310LT	LED(RED)	T
D915	YEADSML310LT	LED(RED)	T
D916	YEADSML310LT	LED(RED)	T
D917	YEADSML310LT	LED(RED)	T
D918	YEADSML310LT	LED(RED)	T
D919	YEADSML310LT	LED(RED)	T
D920	YEADSML310LT	LED(RED)	T
D921	YEADSML310LT	LED(RED)	T
D922	YEADSML310LT	LED(RED)	T
D923	YEADSML310LT	LED(RED)	T
D924	YEADSML310LT	LED(RED)	T
D925	YEADSML310LT	LED(RED)	T
D926	YEADSML310LT	LED(RED)	T
D927	YEADSML310LT	LED(RED)	T
D928	YEADSML310LT	LED(RED)	T
D930	YEADSML310LT	LED(RED)	T
D931	YEADRB501VT	Diode	T
1.3 Capacitors			
MAIN BLOCK [E-4C253]			
C34	ECUV1H470JCN	Ceramic 47pF 50WV	T
C50	ECUV1H103KBN	Ceramic 0.01MFD 50WV	T
C51	ECUV1H103KBN	Ceramic 0.01MFD 50WV	T
C52	ECEA1CKS470I	Electrolytic 47MFD 16WV	T
C53	ECUV1H103KBN	Ceramic 0.01MFD 50WV	T
C54	ECUV1H273KBN	Ceramic 0.027MFD 50WV	T
C55	ECUV1H273KBN	Ceramic 0.027MFD 50WV	T
C56	ECUV1H103KBN	Ceramic 0.01MFD 50WV	T
C57	ECUV1H102KBN	Ceramic 0.001MFD 50WV	T
C100	ECUV1H220JCN	Ceramic 22pF 50WV	T
C101	ECUV1H220JCN	Ceramic 22pF 50WV	T
C102	ECEA0JKS101I	Electrolytic 100MFD 6.3WV	T
C103	ECUV1H103KBN	Ceramic 0.01MFD 50WV	T
C104	ECUV1H101KBN	Ceramic 100pF 50WV	T
C105	ECQV1H224JL2	Plastic Film 0.22MFD 50WV	T
C106	ECUV1H223KBN	Ceramic 0.022MFD 50WV	T

Ref. No.	Part No.	Part Name & Description	Remarks
C107	ECUV1H103KBN	Ceramic 0.01MFD 50WV	T
C108	ECUV1H103KBN	Ceramic 0.01MFD 50WV	T
C109	ECUV1H103KBN	Ceramic 0.01MFD 50WV	T
C110	ECEA1AKS221I	Electrolytic 220MFD 10WV	T
C111	ECEA1AKS221I	Electrolytic 220MFD 10WV	T
C215	ECEA1CKS100I	Electrolytic 10MFD 16WV	T
C216	ECEA1HKS3R3I	Electrolytic 3.3MFD 50WV	T
C217	ECEA1HKS3R3I	Electrolytic 3.3MFD 50WV	T
C218	ECEA1HKS3R3I	Electrolytic 3.3MFD 50WV	T
C219	ECEA1HKS3R3I	Electrolytic 3.3MFD 50WV	T
C220	ECEA1HKS2R2I	Electrolytic 2.2MFD 50WV	T
C221	ECEA1HKS2R2I	Electrolytic 2.2MFD 50WV	T
C241	ECEA1HKS010I	Electrolytic 1MFD 50WV	T
C242	ECEA1HKS010I	Electrolytic 1MFD 50WV	T
C243	ECEA1HKS3R3I	Electrolytic 3.3MFD 50WV	T
C249	ECUV1H222KBN	Ceramic 2200pF 50WV	T
C250	ECUV1H222KBN	Ceramic 2200pF 50WV	T
C280	ECUV1H152KBN	Ceramic 1500pF 50WV	T
C281	ECUV1H152KBN	Ceramic 1500pF 50WV	T
C282	ECUV1H152KBN	Ceramic 1500pF 50WV	T
C283	ECUV1H152KBN	Ceramic 1500pF 50WV	T
C290	ECEA1HKS3R3I	Electrolytic 3.3MFD 50WV	T
C291	ECEA1HKS3R3I	Electrolytic 3.3MFD 50WV	T
C292	ECEA1HKS3R3I	Electrolytic 3.3MFD 50WV	T
C293	ECEA1HKS3R3I	Electrolytic 3.3MFD 50WV	T
C294	ECEA1HKS3R3I	Electrolytic 3.3MFD 50WV	T
C295	ECEA1HKS3R3I	Electrolytic 3.3MFD 50WV	T
C341	ECEA1HKS010I	Electrolytic 1MFD 50WV	T
C342	ECEA1HKS010I	Electrolytic 1MFD 50WV	T
C343	ECEA1HKS3R3I	Electrolytic 3.3MFD 50WV	T
C349	ECUV1H222KBN	Ceramic 2200pF 50WV	T
C350	ECUV1H222KBN	Ceramic 2200pF 50WV	T
C380	ECEA1HKS2R2I	Electrolytic 2.2MFD 50WV	T
C400	ECUV1C474KBN	Chip 0.47MFD 16WV	T
C401	ECUV1H104KBN	Ceramic 0.1MFD 50WV	T
C500	ECUV1H103KBN	Ceramic 0.01MFD 50WV	T
C600	ECUV1H220JCN	Ceramic 22pF 50WV	T
C601	ECUV1H220JCN	Ceramic 22pF 50WV	T
C602	ECUV1H104KBN	Ceramic 0.1MFD 50WV	T
C604	YEECFYH0H223	Electrolytic 22000MFD 5.5WV	T
C605	ECUV1C474KBN	Chip 0.47MFD 16WV	T
C606	ECEA0JKS331I	Electrolytic 330MFD 6.3WV	T
C607	ECEA0JKS331I	Electrolytic 330MFD 6.3WV	T
C610	ECEA0JKS331I	Electrolytic 330MFD 6.3WV	T
C611	ECEA0JKS331I	Electrolytic 330MFD 6.3WV	T
C630	ECEA1CKS470I	Electrolytic 47MFD 16WV	T
C631	ECEA1HKS010I	Electrolytic 1MFD 50WV	T
C669	ECEA1AKS221I	Electrolytic 220MFD 10WV	T
C701	ECEA0JKS101I	Electrolytic 100MFD 6.3WV	T
C703	ECEA1CKS100I	Electrolytic 10MFD 16WV	T
C704	ECEA1AKS101I	Electrolytic 100MFD 10WV	T
C705	ECEA1AKS221I	Electrolytic 220MFD 10WV	T
C706	ECEA1AKS221I	Electrolytic 220MFD 10WV	T
C707	ECEA1CKS101I	Electrolytic 100MFD 16WV	T
C708	ECEA1CKS100I	Electrolytic 10MFD 16WV	T
C709	ECEA1CKS101I	Electrolytic 100MFD 16WV	T
C718	ECUV1C474KBN	Chip 0.47MFD 16WV	T
C720	ECA1CDT332L	Electrolytic 3300MFD 16WV	T
C721	ECEA1HKS2R2I	Electrolytic 2.2MFD 50WV	T
C722	ECEA1HKS010I	Electrolytic 1MFD 50WV	T
C727	ECEA1CKS470I	Electrolytic 47MFD 16WV	T
C730	ECEA1HKS010I	Electrolytic 1MFD 50WV	T
C731	ECEA1HKS010I	Electrolytic 1MFD 50WV	T
C732	ECEA1HKS010I	Electrolytic 1MFD 50WV	T
C733	ECEA1HKS010I	Electrolytic 1MFD 50WV	T
C734	ECA1AM102B	Electrolytic 1000MFD 10WV	T
C770	ECUV1H104KBN	Ceramic 0.1MFD 50WV	T
C800	ECEA1CKS101I	Electrolytic 100MFD 16WV	T
C801	ECEA1AKS221I	Electrolytic 220MFD 10WV	T
C802	ECEA1AKS221I	Electrolytic 220MFD 10WV	T
C804	ECEA1AKS101I	Electrolytic 100MFD 10WV	T
C833	ECEA1CKS101I	Electrolytic 100MFD 16WV	T
C834	ECEA1CKS101I	Electrolytic 100MFD 16WV	T

Ref. No.	Part No.	Part Name & Description	Remarks
C880	ECUV1H103KBM	Ceramic 0.01MFD 50WV	T
C881	ECUV1H101KBN	Ceramic 100pF 50WV	T
DISPLAY BLOCK [E-4C252]			
C901	ECUV1H104KBN	Ceramic 0.1MFD 50WV	T
C902	ECUV1H104KBN	Ceramic 0.1MFD 50WV	T
C903	ECUV1H561KBN	Ceramic 560PF 50WV	T
C904	ECUV1H104KBN	Ceramic 0.1MFD 50WV	T
C905	ECUV1H104KBN	Ceramic 0.1MFD 50WV	T
C906	ECUV1H102KBN	Ceramic 0.001MFD 50WV	T
C907	ECUV1H104KBN	Ceramic 0.1MFD 50WV	T
1.4 Resistors			
MAIN BLOCK [E-4C253]			
J39	ERDS2TJ154T	Carbon 150k ohms 1/4W	T
J56	ERJ6GEY0R00V	Chip 0 ohms 1/10W	T
J120	ERD25TJ181T	Carbon 180 ohms 1/4W	T
J121	ERD25TJ181T	Carbon 180 ohms 1/4W	T
J123	ERD25TJ181T	Carbon 180 ohms 1/4W	T
J124	ERD25TJ181T	Carbon 180 ohms 1/4W	T
J200	ERJ6GEYJ473V	Chip 47k ohms 1/10W	T
J203	ERD25TJ102T	Carbon 1k ohms 1/4W	T
J204	ERJ6GEY0R00V	Chip 0 ohms 1/10W	T
J205	ERD25TJ102T	Carbon 1k ohms 1/4W	T
J206	ERJ8GX0R00V	Chip 0 ohms 1/8W	T
J207	ERJ6GEY0R00V	Chip 0 ohms 1/10W	T
J208	ERJ8GX0R00V	Chip 0 ohms 1/8W	T
J209	ERJ6GEY0R00V	Chip 0 ohms 1/10W	T
J210	ERJ6GEY0R00V	Chip 0 ohms 1/10W	T
J211	ERJ6GEY0R00V	Chip 0 ohms 1/10W	T
J212	ERJ8GX0R00V	Chip 0 ohms 1/8W	T
J213	ERJ6GEY0R00V	Chip 0 ohms 1/10W	T
J215	ERJ6GEY0R00V	Chip 0 ohms 1/10W	T
J216	ERJ8GX0R00V	Chip 0 ohms 1/8W	T
J217	ERJ6GEY0R00V	Chip 0 ohms 1/10W	T
J300	ERJ8GX0R00V	Chip 0 ohms 1/8W	T
J301	ERJ8GX0R00V	Chip 0 ohms 1/8W	T
J302	ERJ8GX0R00V	Chip 0 ohms 1/8W	T
J303	ERJ8GX0R00V	Chip 0 ohms 1/8W	T
J304	ERJ8GX0R00V	Chip 0 ohms 1/8W	T
J305	ERJ8GX0R00V	Chip 0 ohms 1/8W	T
J306	ERJ8GX0R00V	Chip 0 ohms 1/8W	T
J307	ERJ8GX0R00V	Chip 0 ohms 1/8W	T
J308	ERJ8GX0R00V	Chip 0 ohms 1/8W	T
J309	ERJ8GX0R00V	Chip 0 ohms 1/8W	T
J310	ERJ8GX0R00V	Chip 0 ohms 1/8W	T
J311	ERJ8GX0R00V	Chip 0 ohms 1/8W	T
J313	ERJ8GX0R00V	Chip 0 ohms 1/8W	T
J314	ERJ8GX0R00V	Chip 0 ohms 1/8W	T
J315	ERJ8GX0R00V	Chip 0 ohms 1/8W	T
J316	ERJ8GX0R00V	Chip 0 ohms 1/8W	T
J318	ERJ8GX0R00V	Chip 0 ohms 1/8W	T
J319	ERJ8GX0R00V	Chip 0 ohms 1/8W	T
J320	ERJ8GX0R00V	Chip 0 ohms 1/8W	T
J321	ERJ8GX0R00V	Chip 0 ohms 1/8W	T
J322	ERJ8GX0R00V	Chip 0 ohms 1/8W	T
J325	ERJ8GX0R00V	Chip 0 ohms 1/8W	T
J326	ERJ8GX0R00V	Chip 0 ohms 1/8W	T
J327	ERJ8GX0R00V	Chip 0 ohms 1/8W	T
J329	ERJ8GX0R00V	Chip 0 ohms 1/8W	T
J330	ERJ8GX0R00V	Chip 0 ohms 1/8W	T
J331	ERJ8GX0R00V	Chip 0 ohms 1/8W	T
J332	ERJ8GX0R00V	Chip 0 ohms 1/8W	T
J333	ERJ8GX0R00V	Chip 0 ohms 1/8W	T
J334	ERJ8GX0R00V	Chip 0 ohms 1/8W	T
J335	ERJ8GX0R00V	Chip 0 ohms 1/8W	T
J336	ERJ8GX0R00V	Chip 0 ohms 1/8W	T
J337	ERJ8GX0R00V	Chip 0 ohms 1/8W	T
J338	ERJ8GX0R00V	Chip 0 ohms 1/8W	T
J339	ERJ8GX0R00V	Chip 0 ohms 1/8W	T
J340	ERJ6GEY0R00V	Chip 0 ohms 1/10W	T
J341	ERJ8GX0R00V	Chip 0 ohms 1/8W	T
J344	ERJ8GX0R00V	Chip 0 ohms 1/8W	T
J346	ERJ8GX0R00V	Chip 0 ohms 1/8W	T
J347	ERJ8GX0R00V	Chip 0 ohms 1/8W	T

Ref. No.	Part No.	Part Name & Description	Remarks
J348	ERJ8GX0R00V	Chip 0 ohms 1/8W	T
J349	ERJ8GX0R00V	Chip 0 ohms 1/8W	T
J351	ERJ8GX0R00V	Chip 0 ohms 1/8W	T
J353	ERJ6GEY0R00V	Chip 0 ohms 1/10W	T
J354	ERJ8GX0R00V	Chip 0 ohms 1/8W	T
J357	ERJ8GX0R00V	Chip 0 ohms 1/8W	T
J358	ERJ8GX0R00V	Chip 0 ohms 1/8W	T
J363	ERJ8GX0R00V	Chip 0 ohms 1/8W	T
J364	ERJ8GX0R00V	Chip 0 ohms 1/8W	T
J365	ERJ8GX0R00V	Chip 0 ohms 1/8W	T
J371	ERJ8GX0R00V	Chip 0 ohms 1/8W	T
J372	ERJ8GX0R00V	Chip 0 ohms 1/8W	T
J373	ERJ8GX0R00V	Chip 0 ohms 1/8W	T
J375	ERJ8GX0R00V	Chip 0 ohms 1/8W	T
J376	ERJ8GX0R00V	Chip 0 ohms 1/8W	T
J377	ERJ8GX0R00V	Chip 0 ohms 1/8W	T
J378	ERJ8GX0R00V	Chip 0 ohms 1/8W	T
J379	ERJ8GX0R00V	Chip 0 ohms 1/8W	T
J380	ERJ8GX0R00V	Chip 0 ohms 1/8W	T
J381	ERJ8GX0R00V	Chip 0 ohms 1/8W	T
J400	ERJ6GEYJ331V	Chip 330 ohms 1/10W	T
J405	ERJ8GX0R00V	Chip 0 ohms 1/8W	T
J406	ERJ8GX0R00V	Chip 0 ohms 1/8W	T
J407	ERJ8GX0R00V	Chip 0 ohms 1/8W	T
J408	ERJ8GX0R00V	Chip 0 ohms 1/8W	T
J409	ERJ8GX0R00V	Chip 0 ohms 1/8W	T
J436	ERJ8GX0R00V	Chip 0 ohms 1/8W	T
J450	ERJ8GX0R00V	Chip 0 ohms 1/8W	T
J451	ERJ8GX0R00V	Chip 0 ohms 1/8W	T
J500	ERJ6GEY0R00V	Chip 0 ohms 1/10W	T
J601	ERJ6GEY0R00V	Chip 0 ohms 1/10W	T
J602	ERJ6GEY0R00V	Chip 0 ohms 1/10W	T
J603	ERJ6GEY0R00V	Chip 0 ohms 1/10W	T
J613	ERJ8GEYJ473V	Chip 47k ohms 1/8W	T
J614	ERJ8GEYJ473V	Chip 47k ohms 1/8W	T
J671	ERJ8GX0R00V	Chip 0 ohms 1/8W	T
J672	ERJ6GEY0R00V	Chip 0 ohms 1/10W	T
J673	ERJ8GX0R00V	Chip 0 ohms 1/8W	T
J674	ERJ8GX0R00V	Chip 0 ohms 1/8W	T
J675	ERJ6GEY0R00V	Chip 0 ohms 1/10W	T
J676	ERJ6GEY0R00V	Chip 0 ohms 1/10W	T
J679	ERJ8GX0R00V	Chip 0 ohms 1/8W	T
J680	ERJ8GX0R00V	Chip 0 ohms 1/8W	T
J681	ERJ6GEY0R00V	Chip 0 ohms 1/10W	T
J888	ERJ6GEY0R00V	Chip 0 ohms 1/10W	T
R50	ERJ6GEYJ5R6V	Chip 5.6 ohms 1/10W	T
R52	ERJ6GEYJ101V	Chip 100 ohms 1/10W	T
R53	ERJ6GEYJ822V	Chip 8.2k ohms 1/10W	T
R54	ERJ6GEYJ333V	Chip 33k ohms 1/10W	T
R55	ERJ6GEYJ102V	Chip 1k ohms 1/10W	T
R56	ERJ6GEYJ153V	Chip 15k ohms 1/10W	T
R57	ERJ6GEYJ123V	Chip 12k ohms 1/10W	T
R58	ERJ6GEYJ123V	Chip 12k ohms 1/10W	T
R102	ERJ6GEYJ152V	Chip 1.5k ohms 1/10W	T
R103	ERJ6GEYJ182V	Chip 1.8k ohms 1/10W	T
R104	ERDS2TJ561T	Carbon 560 ohms 1/4W	T
R105	ERJ6GEYJ100V	Chip 10 ohms 1/10W	T
R106	ERJ6GEYJ222V	Chip 2.2k ohms 1/10W	T
R107	ERJ8GEYJ102V	Chip 1k ohms 1/8W	T
R108	ERJ8GEYJ102V	Chip 1k ohms 1/8W	T
R109	ERJ8GEYJ102V	Chip 1k ohms 1/8W	T
R110	ERJ8GEYJ102V	Chip 1k ohms 1/8W	T
R111	ERJ6GEYJ473V	Chip 47k ohms 1/10W	T
R206	ERJ6GEYJ562V	Chip 5.6k ohms 1/10W	T
R207	ERJ6GEYJ562V	Chip 5.6k ohms 1/10W	T
R208	ERDS2TJ102T	Carbon 1k ohms 1/4W	T
R209	ERDS2TJ102T	Carbon 1k ohms 1/4W	T
R241	ERJ6GEYJ103V	Chip 10k ohms 1/10W	T
R242	ERJ6GEYJ103V	Chip 10k ohms 1/10W	T
R243	ERJ6GEYJ472V	Chip 4.7k ohms 1/10W	T
R244	ERJ6GEYJ123V	Chip 12k ohms 1/10W	T
R263	ERJ6GEY0R00V	Chip 0 ohms 1/10W	T
R264	ERJ6GEY0R00V	Chip 0 ohms 1/10W	T

Ref. No.	Part No.	Part Name & Description	Remarks
R271	ERD25TJ561T	Carbon 560 ohms 1/4W	T
R272	ERD25TJ561T	Carbon 560 ohms 1/4W	T
R280	ERJ6GEYJ102V	Chip 1k ohms 1/10W	T
R283	ERJ6GEYJ102V	Chip 1k ohms 1/10W	T
R284	ERJ6GEYJ102V	Chip 1k ohms 1/10W	T
R285	ERJ6GEYJ102V	Chip 1k ohms 1/10W	T
R341	ERJ6GEYJ103V	Chip 10k ohms 1/10W	T
R342	ERJ6GEYJ103V	Chip 10k ohms 1/10W	T
R343	ERJ6GEYJ472V	Chip 4.7k ohms 1/10W	T
R344	ERJ6GEYJ123V	Chip 12k ohms 1/10W	T
R363	ERJ6GEY0R00V	Chip 0 ohms 1/10W	T
R364	ERJ6GEY0R00V	Chip 0 ohms 1/10W	T
R371	ERD25TJ561T	Carbon 560 ohms 1/4W	T
R372	ERD25TJ561T	Carbon 560 ohms 1/4W	T
R400	ERJ6GEYJ393V	Chip 39k ohms 1/10W	T
R401	ERJ8GEYJ274V	Chip 270k ohms 1/8w	T
R500	ERJ6GEYJ102V	Chip 1k ohms 1/10W	T
R501	ERJ8GEYJ102V	Chip 1k ohms 1/8W	T
R502	ERJ8GEYJ102V	Chip 1k ohms 1/8W	T
R503	ERJ8GEYJ473V	Chip 47k ohms 1/8W	T
R504	ERJ8GEYJ473V	Chip 47k ohms 1/8W	T
R505	ERJ8GEYJ473V	Chip 47k ohms 1/8W	T
R506	ERJ8GEYJ102V	Chip 1k ohms 1/8W	T
R507	ERJ6GEYJ102V	Chip 1k ohms 1/10W	T
R508	ERJ6GEYJ102V	Chip 1k ohms 1/10W	T
R509	ERJ8GEYJ102V	Chip 1k ohms 1/8W	T
R600	ERJ6GEYJ473V	Chip 47k ohms 1/10W	T
R601	ERJ6GEYJ473V	Chip 47k ohms 1/10W	T
R603	ERJ6GEYJ473V	Chip 47k ohms 1/10W	T
R604	ERJ6GEYJ472V	Chip 4.7k ohms 1/10W	T
R605	ERJ6GEYJ334V	Chip 330k ohms 1/10W	T
R606	ERJ6GEYJ104V	Chip 100k ohms 1/10W	T
R607	ERJ8GEYJ102V	Chip 1k ohms 1/8W	T
R609	ERJ6GEYJ102V	Chip 1k ohms 1/10W	T
R610	ERJ6GEYJ102V	Chip 1k ohms 1/10W	T
R611	ERJ6GEYJ102V	Chip 1k ohms 1/10W	T
R613	ERJ6GEYJ102V	Chip 1k ohms 1/10W	T
R616	ERJ8GEYJ102V	Chip 1k ohms 1/8W	T
R618	ERJ8GEYJ102V	Chip 1k ohms 1/8W	T
R619	ERJ8GEYJ102V	Chip 1k ohms 1/8W	T
R620	ERJ8GEYJ103V	Carbon 10k ohms 1/8W	T
R621	ERJ8GEYJ103V	Carbon 10k ohms 1/8W	T
R630	ERJ6GEYJ102V	Chip 1k ohms 1/10W	T
R631	ERJ6GEYJ104V	Chip 100k ohms 1/10W	T
R632	ERJ8GEYJ104V	Chip 100k ohms 1/8W	T
R634	ERJ6GEYJ332V	Chip 3.3k ohms 1/10W	T
R635	ERJ8GEYJ102V	Chip 1k ohms 1/8W	T
R636	ERJ8GX0R00V	Chip 0 ohms 1/8W	T
R638	ERJ6GEYJ472V	Chip 4.7k ohms 1/10W	T
R660	ERJ6GEYJ102V	Chip 1k ohms 1/10W	T
R661	ERJ6GEYJ102V	Chip 1k ohms 1/10W	T
R662	ERJ8GEYJ104V	Chip 100k ohms 1/8W	T
R663	ERJ8GEYJ104V	Chip 100k ohms 1/8W	T
R666	ERJ6GEYJ473V	Chip 47k ohms 1/10W	T
R668	ERJ6GEYJ473V	Chip 47k ohms 1/10W	T
R669	ERJ6GEYJ102V	Chip 1k ohms 1/10W	T
R670	ERJ6GEYJ103V	Chip 10k ohms 1/10W	T
R678	ERJ6GEYJ223V	Chip 22k ohms 1/10W	T
R679	ERJ8GEYJ473V	Chip 47k ohms 1/8W	T
R680	ERJ6GEYJ103V	Chip 10k ohms 1/10W	T
R681	ERJ6GEYJ103V	Chip 10k ohms 1/10W	T
R682	ERJ6GEYJ103V	Chip 10k ohms 1/10W	T
R700	ERD25FJ1R0T	Carbon 1 ohms 1/4W	T
R701	ERD25TJ152T	Carbon 1.5k ohms 1/4W	T
R702	ERJ8GEYJ561V	Chip 560 ohms 1/8W	T
R703	ERD25FJ1R0T	Carbon 1 ohms 1/4W	T
R704	ERD25FJ5R6T	Carbon 5.6 ohms 1/4W	T
R705	ERD25TJ471T	Carbon 470 ohms 1/4W	T
R706	ERDS1FJ821T	Carbon 820 ohms 1/2W	T
R707	ERDS1FJ821T	Carbon 820 ohms 1/2W	T
R708	ERJ8GEYJ473V	Chip 47k ohms 1/8W	T
R709	ERJ8GEYJ330V	Chip 33 ohms 1/8W	T
R710	ERJ8GEYJ562V	Chip 5.6k ohms 1/8W	T

Ref. No.	Part No.	Part Name & Description	Remarks
R737	ERJ6GEYJ273V	Chip 27k ohms 1/10W	T
R770	ERJ6GEYJ103V	Chip 10k ohms 1/10W	T
R771	ERDS2TJ512T	Carbon 5.1k ohms 1/4W	T
R772	ERDS2TJ512T	Carbon 5.1k ohms 1/4W	T
R773	ERJ6GEYJ512V	Chip 5.1k ohms 1/10W	T
R774	ERJ6GEYJ512V	Chip 5.1k ohms 1/10W	T
R776	ERJ8GX0R00V	Chip 0 ohms 1/8W	T
R778	ERJ8GX0R00V	Chip 0 ohms 1/8W	T
R800	ERD25FJ1R0T	Carbon 1 ohms 1/4W	T
R801	ERD25TJ221T	Carbon 220 ohms 1/4W	T
R820	ERJ8GEYJ152V	Carbon 1.5k ohms 1/8W	T
R821	ERJ6GEYJ473V	Chip 47k ohms 1/10W	T
R841	ERJ6GEYJ472V	Chip 4.7k ohms 1/10W	T
R850	ERJ6GEYJ562V	Chip 5.6k ohms 1/10W	T
R860	ERJ6GEYJ562V	Chip 5.6k ohms 1/10W	T
R861	ERJ6GEYJ472V	Chip 4.7k ohms 1/10W	T
R862	ERJ8GEYJ473V	Chip 47k ohms 1/8W	T
R863	ERJ8GEYJ471V	Chip 470 ohms 1/8W	T
DISPLAY BLOCK [E-4C252]			
R901	ERJ6GEYJ4R7V	Chip 4.7 ohms 1/10W	T
R902	ERJ6GEYJ473V	Chip 47k ohms 1/10W	T
R903	ERJ6GEYJ102V	Chip 1k ohms 1/10W	T
R904	ERJ6GEYJ4R7V	Chip 4.7 ohms 1/10W	T
R905	ERJ6GEYJ102V	Chip 1k ohms 1/10W	T
R906	ERJ6GEYJ102V	Chip 1k ohms 1/10W	T
R907	ERJ6GEYJ102V	Chip 1k ohms 1/10W	T
R908	ERJ6GEYJ102V	Chip 1k ohms 1/10W	T
R909	ERJ6GEYJ102V	Chip 1k ohms 1/10W	T
R910	ERJ6GEYJ103V	Chip 10k ohms 1/10W	T
R911	ERJ6GEYJ681V	Chip 680 ohms 1/10W	T
R920	ERJ8GEYJ121V	Chip 120 ohms 1/8W	T
R921	ERJ8GEYJ121V	Chip 120 ohms 1/8W	T
R922	ERJ6GEYJ821V	Chip 820 ohms 1/10W	T
R923	ERJ6GEYJ821V	Chip 820 ohms 1/10W	T
R924	ERJ6GEYJ821V	Chip 820 ohms 1/10W	T
R925	ERJ6GEYJ821V	Chip 820 ohms 1/10W	T
R926	ERJ6GEYJ821V	Chip 820 ohms 1/10W	T
R927	ERJ6GEYJ821V	Chip 820 ohms 1/10W	T
R928	ERJ6GEYJ821V	Chip 820 ohms 1/10W	T
R929	ERJ6GEYJ821V	Chip 820 ohms 1/10W	T
1.5. Connectors			
MAIN BLOCK [E-4C253]			
CN200	YEAE4CRCA044	Connect	T
CN500	YEAEB6610001	Connect	T
CN601	YEAE012475	Connect	T
CN700	K1FA116B0028	Connect	T
CN701	K1KA18A00074	Connect	T
CN900	YEAER140005	Connect	T
CP501	YEAE4CDIN023	Connect	T
DISPLAY BLOCK [E-4C252]			
CN901	YEAE012476	Connect	T
1.6. Electric Parts			
SWITCHES			
SW902	K0H1BA000445	Tack Swich	T
SW903	K0H1BA000445	Tack Swich	T
SW904	K0H1BA000445	Tack Swich	T
SW905	K0H1BA000445	Tack Swich	T
SW906	K0H1BA000445	Tack Swich	T
SW907	K0H1BA000445	Tack Swich	T
SW908	K0H1BA000445	Tack Swich	T
SW909	K0H1BA000445	Tack Swich	T
SW910	K0H1BA000445	Tack Swich	T
SW911	K0H1BA000445	Tack Swich	T
SW912	K0H1BA000445	Tack Swich	T
SW913	K0H1BA000445	Tack Swich	T
SW914	K0H1BA000445	Tack Swich	T
SW915	K0H1BA000445	Tack Swich	T
SW916	K0H1BA000445	Tack Swich	T
SW917	K0H1BA000445	Tack Swich	T
CRYSTAL			
XL100	YEXL4C720TT	Crystal (7.2MHz)	T
XL600	YEXL4C12M5T	Crystal (12.50mhz)	T
XL601	YEXL4C32768T	Crystal (32.768KHz)	T

Ref. No.	Part No.	Part Name & Description	Remarks
COILS			
L50	YELT02C330KT	Axial Coil	T
L60	YELTR56MT	Coil (Chip)	T
L100	YELT02C101KT	Axial Coil	T
L700	YETQ024C055V	Choke Coil	T
VR			
VR901	K9AA024A0007	ENCODE VR	T
LCD			
LCD901	YEXDCM4C101	LCD	T
POSISTOR			
PT700	YERT7AR4R7MT	Posistor	T
Accessories			
	YFM284C374ZA	Operating Instructions	T
1.7. INSTALLATION PARTS			
	YFC054C061ZA	Unit Case	T
	YEAJ02877	Power Cord Ass’y	T
	YFG044C002ZA	Stay	T
	ZZBISDP103U	Screw Kit	T
1.8. Mechanical Parts			
MISCELLANEOUS			
ANT1	YAA104C700ZA	ANT Jack	T(2-C)
1	YJT034C035ZA	Screw	T(3-C)
2	YFA034C044ZA	Upper Cover	T(4-C)
3	YFC024C593ZA	Esc Holder (CD)	T(2-B)
4	YFE134C440ZA	Push Button	T(2-B)
5	FX0054C058ZA	Spring (push button)	T(2-B)
6	YEFX9991682A	Release Hook	T(2-B)
7	FX0054C049ZA	Spring(Hook)	T(2-B)
8	YJT034C015CA	Step Screw	T(2-B)
9	YFC054C058ZA	Trim Plate(print)	T(1-A)
10	YFX054C051ZA	Spring Plate(R)	T(2-C)
11	YFX054C052ZA	Spring Plate(L)	T(3-B)
12	XTB3+6FFXS	Screw	T(2-C) T(3-B)
13	YFA054C036YA	Under Cover	T(1-C)
14	YFA084C039ZA	Rear Plate	T(3-C)
15	YFA074C045ZA	Front Plate	T(2-B)
16	YFA094C091ZA	Right Plate	T(2-C)
17	YFF014C047ZA	Heat Sink	T(3-B)
18	YEJT034C001	Screw	T(2-B) T(2-C)
19	XTB3+6FFXS	Screw	T(2-C) T(3-B)
20	YEJT034C019	Screw(cup tight 3x12)	T(3-B)
21	XTB26+8G	Screw	T(3-C)
22	FX0214C319ZA	RCA Jack Bracket	T(3-C)
24	FX0214C322ZA	Tr BKT	T(2-B)
25	FX0214C276ZA	IC Bracket	T(2-B)
27	YFJ014C094ZA	Ornament Panel(print)	T(1-A)
28	YFX014C071ZA	Panel Light (CD)	T(1-A)
29	YFC024C591ZA	Esc Front Cover	T(1-A)
30	XTB2+4PFZ	Screw (panel)	T(1-A)
31	FX0054C055ZA	Spring (open)	T(1-B)
32	YFE134C422ZA	Button(band/src)	T(2-A)
33	YFE074C057ZA	Vol Knob	T(2-A)
34	YFC024C592ZA	Esc Rear Cover	T(2-B)
35	YFE134C420ZA	Button(preset)	T(1-B)
36	YFE134C419ZA	Button(release)	T(1-B)
37	YFE134C424ZA	Button(tune/track)	T(1-B)
38	YFE134C421ZA	Button(ej/disp)	T(1-B)
39	XTN2+8GFZ	Screw (Esc)	T(2-B)
40	YFX214C315YA	LCD Bracket	T(2-B)
41	YEFX0012300	Back Light Assy	T(2-B)
42	YFV024C080ZA	Sheet(LCD)	T(2-B)
43	FX0214C316ZA	Escape Case	T(3-A)
44	YEFS02302	Dust Felt	T(2-B)
45	YFJ014C091ZA	Sensor Cap	T(1-A)
46	YEFS011113	Pad	T(2-B)
47	YFV024C078ZA	Sheet(panel)	T(1-A)
48	YFX054C053ZA	Spring (knob)	T(2-A)
49	YJS064C002ZA	Screw (m3x8)	T(2-B)
50	YFV014C068ZA	Sheet	T(1-C)
52	XSB3+6FXS	Screw	T(3-C)

Ref. No.	Part No.	Part Name & Description	Remarks
55	YEAP4C253	Main PCB Assy	T(2-C) /RTL
56	YEAP4C252	Display PCB Assy	T(3-C)/RTL

14 EXPLODED VIEW (Unit)

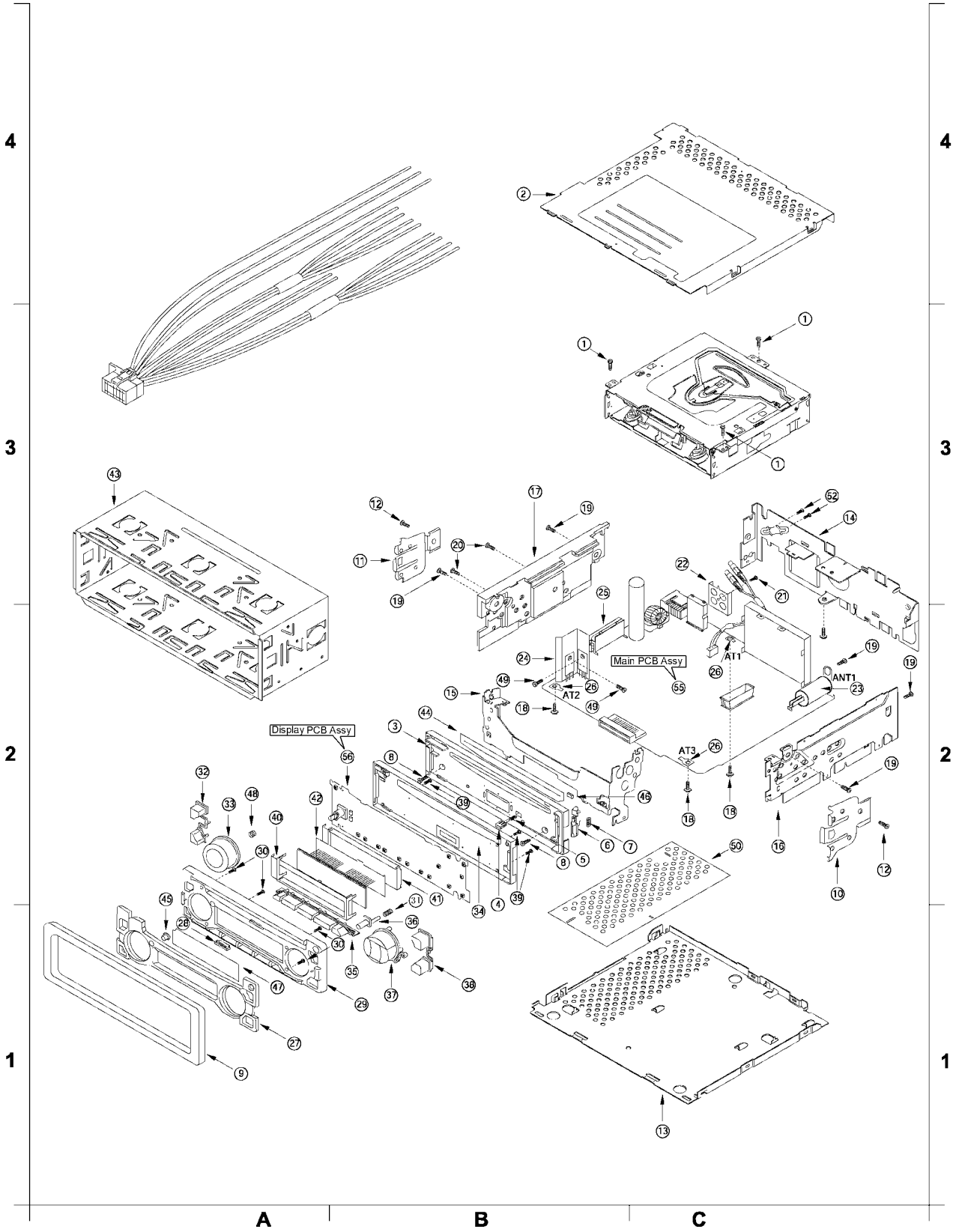

15 CD PLAYER PARTS LIST

Note:

1. Be sure to make your orders of replacement parts according to this list.
2. Important safty notice: Component , indentified by ⚠ mark have special characteristics important for safety. when replacing any of these components, use only manufacturer's specified parts.
3. Location keys in the remarks column indicates the general location of the parts shown in the exploded drawing. as in a load map.
4. The marking (RTL) indicates that Retention Time is limited for this item. After the discontinuation of assembly in production, the item will continue to be availability is dependent on the type of assembly, and in accordance with the laws governing part and product retention. Aft the end of this period, the assembly will no longer be available.
5. "T" marks in remarks colum are indicated supply parts of TAMACO.

▪ Order intake period is basically six months after the first shipment

Ref. No.	Part No.	Part Name & Description	Remarks
[3032-14-02] CD Servo Block			
IC's and TRANSISTORs			
IC201	MN6627482WB	IC	
IC202	YESAM163	IC	
IC203	YESAM166	IC	
IC204	C0ABBB000073	IC	
IC401	YESAM176	IC	
IC402	YESAM172	IC	
IC406	YESAM171	IC	
IC409	YESAM167	IC	
IC411	YESAM178	IC	
Q101	B1BDBC000001	Transistor	
Q201	B1BDBC000001	Transistor	
Q203	YESAN060	Transistor	
CAPACITORs			
C101	YESCC203	Chip, 220pF 50WV	
C102	YESCC187	Chip, 0.1MFD 25WV	
C103	YESCC187	Chip, 0.1MFD 25WV	
C104	YESCC206	Chip, 0.047MFD 25WV	
C105	F1H1H2220004	Chip, 0.0047MFD 25WV	
C106	YESCC207	Chip, 0.001MFD 50WV	
C107	YESCC206	Chip, 0.047MFD 25WV	
C108	YESCC204	Chip, 330pF 50WV	
C109	YESCC187	Chip, 0.1MFD 25WV	
C110	YESCC187	Chip, 0.1MFD 25WV	
C111	YESCC186	Chip, 0.022MFD 50WV	
C112	YESCC183	Chip, 0.0022MFD 50WV	
C113	YESCC208	Chip, 0.0015MFD 50WV	
C114	YESCC207	Chip, 0.001MFD 50WV	
C115	YESCC187	Chip, 0.1MFD 25WV	
C116	YESCC187	Chip, 0.1MFD 25WV	
C121	YESCC187	Chip, 0.1MFD 25WV	
C122	YESCC207	Chip, 0.001MFD 50WV	
C123	YESCC186	Chip, 0.022MFD 50WV	
C124	YESCC187	Chip, 0.1MFD 25WV	
C125	YESCC207	Chip, 0.001MFD 50WV	
C126	YESCC210	Chip, 1MFD 16WV	
C127	YESCC207	Chip, 0.001MFD 50WV	
C128	YESCC205	Chip, 0.22MFD 10WV	
C129	YESCC187	Chip, 0.1MFD 25WV	
C130	YESCC207	Chip, 0.001MFD 50WV	
C131	YESCC187	Chip, 0.1MFD 25WV	
C132	YESCC187	Chip, 0.1MFD 25WV	
C135	YESCC187	Chip, 0.1MFD 25WV	
C136	YESCC187	Chip, 0.1MFD 25WV	
C137	YESCC210	Chip, 1MFD 16WV	
C138	YESCC210	Chip, 1MFD 16WV	
C139	YESCC187	Chip, 0.1MFD 25WV	
C140	YESCC187	Chip, 0.1MFD 25WV	
C141	YESCC187	Chip, 0.1MFD 25WV	
C151	YESCC188	Electrolytic, 10MFD 16WV	
C152	YESCC213	Electrolytic, 22MFD 6.3WV	
C153	YESCC213	Electrolytic, 22MFD 6.3WV	
C154	YESCC215	Electrolytic, 220MFD 10WV	
C203	YESCC209	Chip, 0.0033MFD 50WV	
C204	YESCC209	Chip, 0.0033MFD 50WV	
C205	YESCC187	Chip, 0.1MFD 25WV	
C207	YESCC187	Chip, 0.1MFD 25WV	
C208	YESCC202	Chip, 22pF 50WV	
C251	YESCC215	Electrolytic, 220MFD 10WV	
C252	YESCC214	Electrolytic, 47MFD 6.3WV	
C253	YESCC215	Electrolytic, 220MFD 10WV	
C301	YESCC207	Chip, 0.001MFD 50WV	
C302	YESCC207	Chip, 0.001MFD 50WV	
C311	YESCC207	Chip, 0.001MFD 50WV	
C312	YESCC207	Chip, 0.001MFD 50WV	
C321	YESCC187	Chip, 0.1MFD 25WV	
C356	YESCC213	Electrolytic, 22MFD 6.3WV	
C357	YESCC214	Electrolytic, 47MFD 6.3WV	
C358	YESCC213	Electrolytic, 22MFD 6.3WV	
C359	YESCC216	Electrolytic, 100MFD 16WV	
C360	YESCC188	Electrolytic, 10MFD 16WV	
C401	YESCC187	Chip, 0.1MFD 25WV	
C402	YESCC187	Chip, 0.1MFD 25WV	
C403	YESCC187	Chip, 0.1MFD 25WV	
C404	YESCC187	Chip, 0.1MFD 25WV	
C405	YESCC187	Chip, 0.1MFD 25WV	
C406	YESCC188	Chip, 0.1MFD 26WV	
C407	YESCC189	Chip, 0.1MFD 27WV	
C408	YESCC190	Chip, 0.1MFD 28WV	
C409	YESCC187	Chip, 0.1MFD 25WV	
C410	YESCC187	Chip, 0.1MFD 25WV	
C411	YESCC188	Chip, 0.1MFD 26WV	
C412	YESCC189	Chip, 0.1MFD 27WV	
C413	YESCC190	Chip, 0.1MFD 28WV	
C414	YESCC191	Chip, 0.1MFD 29WV	
C418	YESCC187	Chip, 0.1MFD 25WV	
C426	YESCC187	Chip, 0.1MFD 25WV	
C433	YESCC210	Chip, 1MFD 16WV	
C434	YESCC210	Chip, 1MFD 16WV	
C435	YESCC187	Chip, 0.1MFD 25WV	
C436	YESCC187	Chip, 0.1MFD 25WV	
C437	YESCC210	Chip, 1MFD 16WV	
C452	YESCC188	Electrolytic, 10MFD 16WV	
C463	YESCC214	Electrolytic, 47MFD 6.3WV	
C464	YESCC214	Electrolytic, 47MFD 6.3WV	
R435	YESCC187	Chip, 0.1MFD 25WV	
RESISTORs			
JP101	ERJ8GEY0R00V	Chip, 0 ohms 1/8W	
JP102	ERJ8GEY0R00V	Chip, 0 ohms 1/8W	
L302	ERJ6GEY0R00	Chip, 0 ohms 1/10W	
L303	ERJ6GEY0R00	Chip, 0 ohms 1/10W	
L304	ERJ6GEY0R00	Chip, 0 ohms 1/10W	
L305	ERJ6GEY0R00	Chip, 0 ohms 1/10W	
R101	ERJ3GEYJ4R7V	Chip, 4.7 ohms 1/16W	
R103	ERJ3GEYJ152V	Chip, 1.5k ohms 1/16W	
R104	ERJ3GEYJ471V	Chip, 470 ohms 1/16W	
R105	ERJ3GEYJ272V	Chip, 2.7k ohms 1/16W	
R106	ERJ3GEYJ103V	Chip, 10k ohms 1/16W	
R107	ERJ3GEYJ272V	Chip, 2.7k ohms 1/16W	
R108	ERJ3GEYJ394V	Chip, 390k ohms 1/16W	
R109	ERJ3GEYJ154V	Chip, 150k ohms 1/16W	
R110	ERJ3GEYJ103V	Chip, 10k ohms 1/16W	
R111	ERJ3GEYJ183V	Chip, 18k ohms 1/16W	
R112	ERJ3GEYJ244V	Chip, 240k ohms 1/16W	
R113	ERJ3GEYJ124V	Chip, 120k ohms 1/16W	

Ref. No.	Part No.	Part Name & Description	Remarks
R114	ERJ3GEY0R00V	Chip, 0 ohms 1/16W	
R115	ERJ3GEYJ222V	Chip, 2.2k ohms 1/16W	
R116	ERJ3GEYJ222V	Chip, 2.2k ohms 1/16W	
R117	ERJ3GEY0R00V	Chip, 0 ohms 1/16W	
R118	ERJ3GEYJ153V	Chip, 15k ohms 1/16W	
R119	ERJ3GEYJ102V	Chip, 1k ohms 1/16W	
R120	ERJ3GEY0R00V	Chip, 0 ohms 1/16W	
R121	ERJ3GEYJ224V	Chip, 240k ohms 1/16W	
R122	ERJ3GEYJ563V	Chip, 56k ohms 1/16W	
R123	ERJ3GEYJ124V	Chip, 120k ohms 1/16W	
R125	ERJ3GEYJ471V	Chip, 470 ohms 1/16W	
R126	ERJ3GEYJ272V	Chip, 2.7k ohms 1/16W	
R127	RK1J224JT	Chip, 220 ohms 1/10W	
R128	ERJ3GEYJ221V	Chip, 220 ohms 1/16W	
R129	ERJ3GEYJ682V	Chip, 6.8k ohms 1/16W	
R130	ERJ3GEYJ105V	Chip, 1M ohms 1/16W	
R131	ERJ3GEYJ222V	Chip, 2.2k ohms 1/16W	
R133	ERJ3GEYJ222V	Chip, 2.2k ohms 1/16W	
R136	ERJ3GEYJ222V	Chip, 2.2k ohms 1/16W	
R137	ERJ3GEYJ102V	Chip, 1k ohms 1/16W	
R138	ERJ3GEYJ102V	Chip, 1k ohms 1/16W	
R139	ERJ3GEYJ102V	Chip, 1k ohms 1/16W	
R140	ERJ3GEYJ102V	Chip, 1k ohms 1/16W	
R141	ERJ3GEYJ102V	Chip, 1k ohms 1/16W	
R142	ERJ3GEYJ102V	Chip, 1k ohms 1/16W	
R201	ERJ3GEYJ682V	Chip, 6.8k ohms 1/16W	
R202	ERJ3GEY0R00V	Chip, 0 ohms 1/16W	
R204	ERJ3GEYJ102V	Chip, 1k ohms 1/16W	
R205	ERJ3GEY0R00V	Chip, 0 ohms 1/16W	
R206	ERJ3GEYJ183V	Chip, 18k ohms 1/16W	
R207	ERJ3GEYJ512V	Chip, 5.1k ohms 1/16W	
R208	ERJ3GEY0R00V	Chip, 0 ohms 1/16W	
R209	ERJ3GEYJ512V	Chip, 5.1k ohms 1/16W	
R210	ERJ3GEY0R00V	Chip, 0 ohms 1/16W	
R211	ERJ3GEYJ273V	Chip, 27k ohms 1/16W	
R212	ERJ3GEYJ473V	Chip, 47k ohms 1/16W	
R301	ERJ3GEYJ392V	Chip, 3.9k ohms 1/16W	
R302	ERJ3GEYJ392V	Chip, 3.9k ohms 1/16W	
R303	ERJ3GEYJ153V	Chip, 15k ohms 1/16W	
R304	ERJ3GEYJ103V	Chip, 10k ohms 1/16W	
R305	RK1J221JT	Chip, 220 ohms 1/10W	
R311	ERJ3GEYJ392V	Chip, 3.9k ohms 1/16W	
R312	ERJ3GEYJ392V	Chip, 3.9k ohms 1/16W	
R313	ERJ3GEYJ153V	Chip, 15k ohms 1/16W	
R314	ERJ3GEYJ103V	Chip, 10k ohms 1/16W	
R315	ERJ3GEYJ221V	Chip, 220 ohms 1/16W	
R322	ERJ3GEYJ103V	Chip, 10k ohms 1/16W	
R323	ERJ3GEYJ103V	Chip, 10k ohms 1/16W	
R324	ERJ3GEYJ104V	Chip, 100k ohms 1/16W	
R325	ERJ3GEYJ104V	Chip, 100k ohms 1/16W	
R326	ERJ3GEYJ101V	Chip, 100 ohms 1/16W	
R327	ERJ3GEYJ103V	Chip, 10k ohms 1/16W	
R328	ERJ3GEYJ103V	Chip, 10k ohms 1/16W	
R329	ERJ3GEYJ102V	Chip, 1k ohms 1/16W	
R401	ERJ3GEYJ103V	Chip, 10k ohms 1/16W	
R402	ERJ3GEYJ103V	Chip, 10k ohms 1/16W	
R403	ERJ3GEYJ103V	Chip, 10k ohms 1/16W	
R404	ERJ3GEYJ103V	Chip, 10k ohms 1/16W	
R408	ERJ3GEYJ472V	Chip, 4.7k ohms 1/16W	
R409	ERJ3GEYJ472V	Chip, 4.7k ohms 1/16W	
R414	ERJ3GEYJ473V	Chip, 47k ohms 1/16W	
R415	ERJ3GEYJ473V	Chip, 47k ohms 1/16W	
R416	ERJ3GEYJ473V	Chip, 47k ohms 1/16W	
R425	ERJ3GEYJ101V	Chip, 100 ohms 1/16W	
R428	ERJ3GEYJ330V	Chip, 33 ohms 1/16W	
R429	ERJ3GEYJ221V	Chip, 220 ohms 1/16W	
R430	ERJ3GEYJ561V	Chip, 560 ohms 1/16W	
R431	ERJ3GEYJ472V	Chip, 4.7k ohms 1/16W	
R432	ERJ3GEYJ103V	Chip, 10k ohms 1/16W	
R434	ERJ3GEYJ104V	Chip, 100k ohms 1/16W	
R478	ERJ3GEYJ560V	Chip, 56 ohms 1/16W	
R480	ERJ3GEYJ560V	Chip, 56 ohms 1/16W	
R481	ERJ3GEYJ472V	Chip, 4.7k ohms 1/16W	

Ref. No.	Part No.	Part Name & Description	Remarks
R482	ERJ3GEYJ222V	Chip, 2.2k ohms 1/16W	
R483	ERJ3GEYJ222V	Chip, 2.2k ohms 1/16W	
RESISTOR NETWORKs			
RA401	YESXA003	Resistor Network	
RA402	YESXA003	Resistor Network	
RA403	YESXA003	Resistor Network	
RA405	YESXA003	Resistor Network	
RA406	YESXA003	Resistor Network	
RA407	YESXA003	Resistor Network	
RA408	YESXA003	Resistor Network	
RA409	YESXA003	Resistor Network	
RA410	YESXA003	Resistor Network	
RA412	YESXA002	Resistor Network	
RA413	YESXA003	Resistor Network	
RA414	YESXA002	Resistor Network	
CRYSTAL			
X401	YESXL018	Crystal OSC	
COILs			
L301	YESLQ011	Coil	
L401	YESLQ014	Coil	
L402	YESLQ014	Coil	
L403	YESLQ014	Coil	
CONNECTORs			
CN101	YESAE345	Connector 18P	
CN102	K1MN16B00036	FFC/FPC Connector 16P	
MECHANICAL PARTS			
MISCELLANEOUS			
1	YERFA01001	Frame M	T(E-4)
2	YERFA01002	Top cover M	T(A-4)
3	YERFS04003	Damper F	T(E-3)
4	YERFS04004	Damper R	T(D-4)
11	YERFA01005	Chassis Rivet S Ass'y (M)	T(B-2)
12	YERFX046001	Change Plate Rivet Ass'y (M)	T(C-4)
13	YERFX007001	Clamper Ass'y	T(B-3)
14	YERAK0001	Spindle Motor (M) Ass'y	T(D-1)
15	YERFX046002	Clamper Arm M	T(B-4)
16	YERFX005001	Change Gear Spring	T(D-4)
17	YERFX03001	Change Gear 2	T(D-4)
18	YERFX03002	Feed Gear	T(D-3)
19	YERFX03003	Feed Rack M	T(B-1)
20	YERFX046003	Change Lock Lever M	T(D-3)
21	YERFW04001	Feed SW Holder (M)	T(C-1)
22	YERFW04002	PU Shaft Holder(M)	T(B-1); T(B-2)
23	YERFX005002	Clamper Sub Spring	T(B-3)
24	YERFW04003	FD Sub Holder M	T(B-1)
25	YERFA01006	Top Plate S	T(B-2)
26	YERFX046004	Select Lock Arm	T(A-1)
27	YERFX046005	Trigger Arm M	T(C-4)
28	YERFX046006	Slide Hook	T(C-4)
29	YERFW01001	PU Shaft M	T(B-1)
30	YERFX005003	Clamper Arm Spring M	T(B-4)
31	YERFX005004	Select Lock Arm Spring	T(A-1)
32	YERFX005013	Suspension Spring MS	T(B-3); T(C-1); T(C-4); T(D-2)
33	YERFX046007	Select Arm R	T(A-2)
34	YERFX03004	Link Plate	T(A-2)
35	YESFX005137	Link Plate Spring	T(A-2)
36	YERFS01001	Cushion F	T(A-1)
37	YERFS01002	Cushion R	T(B-4)
38	YERFX005014	Feed SPR Plate M	T(C-2)
43	YERFX046008	Select Plate L	T(A-1)
44	YERFX046009	Select Plate R	T(A-2)
45	YERFX046010	Select Piece L	T(A-1)
46	YERFX046011	Select Piece R	T(A-2)
61	YESSZCDM002	Pick Up RD-DAP005-TN	T(B-1)
62	YERAS0001	DET SW ESE 22MH55	T(C-1)

Ref. No.	Part No.	Part Name & Description	Remarks
71	YESAP255	Servo PCB Ass’y	T(E-2)/RTL
72	YERAS0002	Mode SW	T(A-1)
73	YESAJ02015	LD Wire MS	T(B-3); T(C-1)
74	YESAJ02013	SW Wire S	T(A-1)
75	YESAJ02012	SP Wire S	T(D-2)
77	YERFX999001	Wire Clamper M	T(C-2); T(C-3); T(D-4); T(E-3)
78	YESFX024021	Wire Tube SPM	T(D-2)
79	YESFX024022	Wire Tube MSW	T(A-1)
81	YERFX03005	Roller Shaft Ass’y	T(E-2)
82	YERFX046012	Loading Gear Plate Rivet Ass’y	T(D-2)
83	YERFX046013	Loading Plate Ass’y	T(C-4)
84	YERFX046014	Lock Arm Rivet Ass’y	T(E-1)
85	YERAK0002	Loading/Feed Motor Ass’y(MB)	T(B-3)
86	YERFX03006	Loading Gear 1	T(D-4)
87	YERFX03007	Loading Gear 2	T(D-3)
88	YERFX03008	Loading Gear 3	T(D-3)
89	YERFX03009	Loading Gear 4	T(D-2)
90	YERFX03010	Loading Gear 5	T(D-2)
91	YERFX03011	Loading Gear 6	T(D-2)
92	YERFX03012	Loading Gear 7	T(D-3)
93	YERFW04004	Roller Guide	T(D-1); T(E-3)
94	YERFX005007	Roller Guide Spring	T(D-1); T(E-1)
95	YERFX046015	Disc Stopper Arm	T(C-1)
96	YERFX005008	Disc Stop Arm Spring	T(D-2)
97	YERFX046016	LD Gear Bracket	T(D-2)
98	YESFX046133	L Slide Plate	T(D-4)
99	YERFX005009	Loading Plate Spring	T(C-4)
100	YESFX046136	LDG Roller	T(D-1)
101	YERJS01001	PK Collar Screw A	T(E-1)
111	YERJT01001	Tapping Screw 2~3	T(A-3); T(B-3); T(B-4);T(D-2); T(E-4)
112	YERJT01002	Tapping Screw 2~4	T(B-1); T(B-2)
113	YEJT03117	Tapping Bind Screw 2~4	T(D-2)
114	YERJS01002	Camera Screw 1.7~1.8	T(B-2)
115	YERJS01003	Camera Screw 2~2	T(C-3)
116	YERJS01004	Camera Tapping Screw P3 M1.7~5	T(C-1)
117	YESJT03070	Tapping Screw (Metal) 2.0~4.0	T(E-1); T(E-2)
121	YERJW01001	PW 3.5~8~0.3	T(D-4)
122	YERJW01002	HLW 1.85~5~0.13	T(D-1)
123	YERJW01003	Lumilar Washer 3.1~6~0.1	T(D-1)
124	YEJE01028	E Ring S 1.5	T(D-4)
125	YERJW01005	PW 2.1~4~0.13	T(D-3)

16 EXPLODED VIEW (CD Deck)

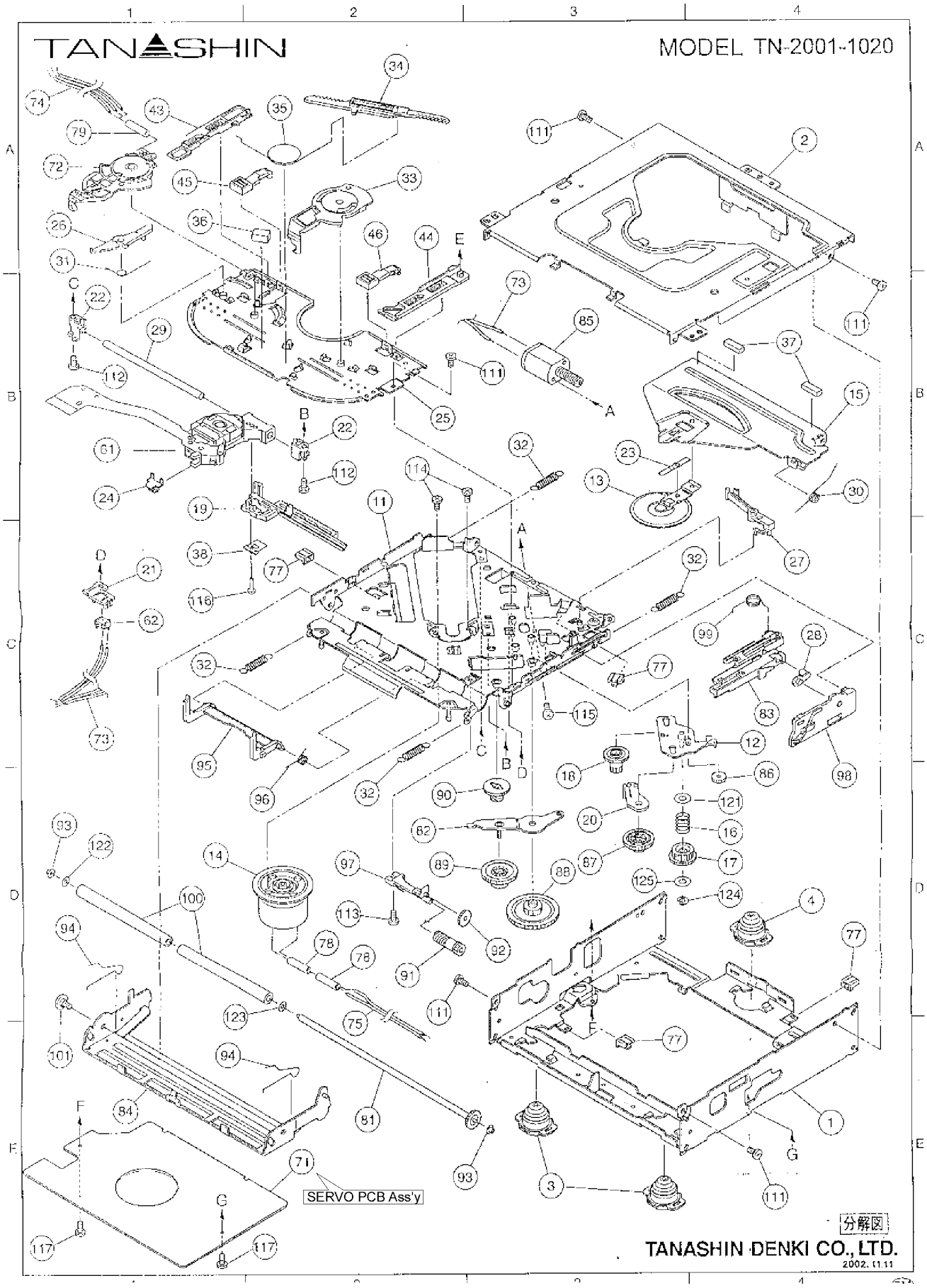

17 PACKING PARTS LIST

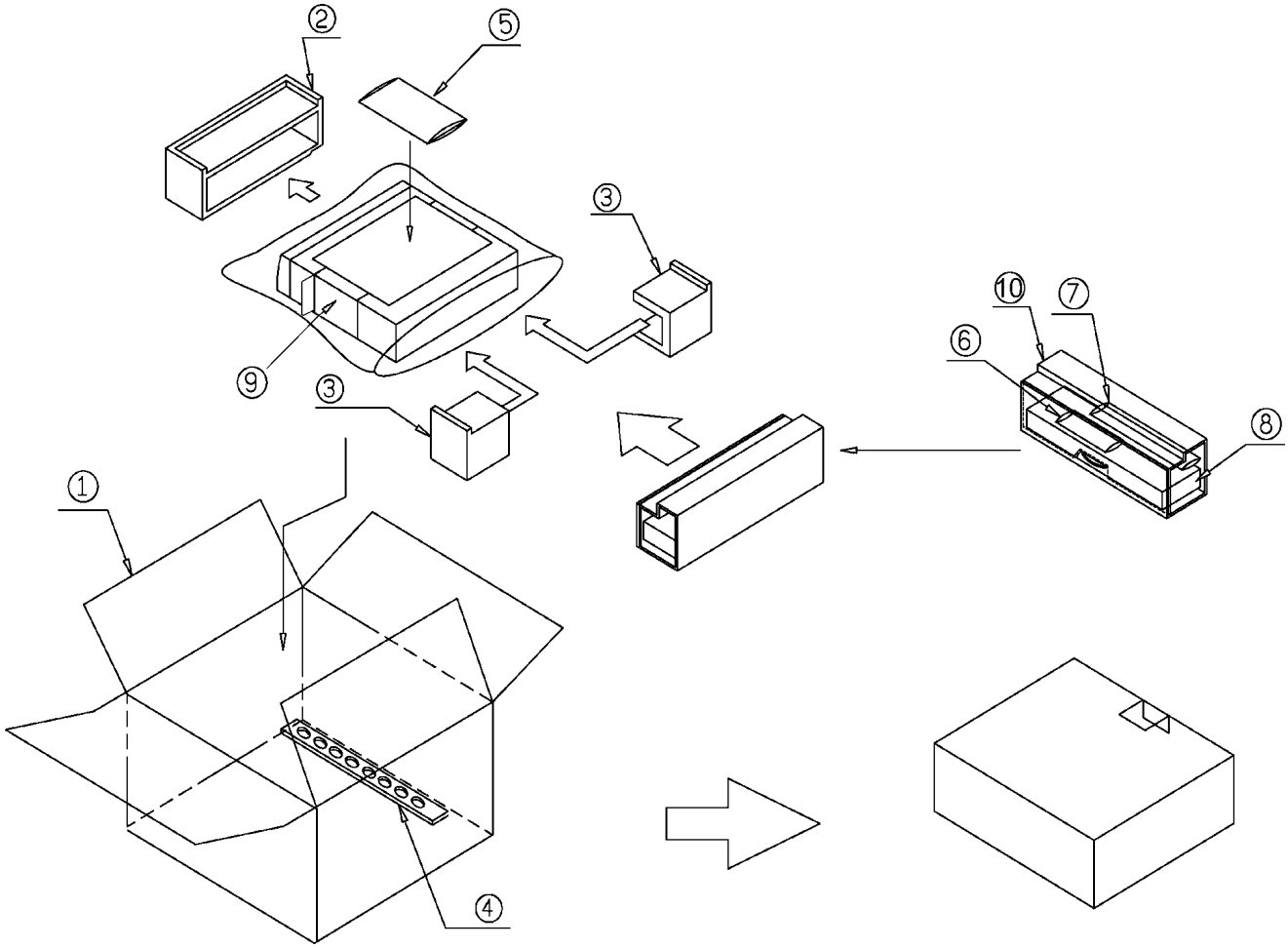

.Item numbers listed below should not order reguler spare parts. (not available)

Item No.	Part No.	Part Name & Description	Q'ty	Remarks
1	---	Inner Carton	1	Not available
2	---	Packing Pad Front	1	Not available
3	---	Packing Pad Rear	1	Not available
4	YFG044C002ZA	Rear Support Strap	1	
5	ZZPRDP383U	Operating Instruction Kit	1	Not available
	YFM284C374ZA	Operating Instructions	(1)	
	YFM074C144CA	Warranty Card	(1)	Not available
	YFM074C145CA	Warranty Card	(1)	Not available
	YFM074C148CA	Warranty Application Card	(1)	Not available
	YFM094C027CA	SVC Card (EU)	(1)	Not available
	YEFX9992663	Remote Controller	(1)	
	YEAB99-0022	Battery	(1)	
6	ZZBISDP103U	Screw Kit	1	
7	YEAJ02877	Power Connector	1	
8	YFC054C061ZA	Removable Front Panel Case	1	
9	FX0214C316ZA	Mounting Collar	1	
10	YFU014C227ZA	accessory box	1	Not available

18 SCHEMATIC DIAGRAM for printing with A4 size

18.1. Main Block (Left Side)

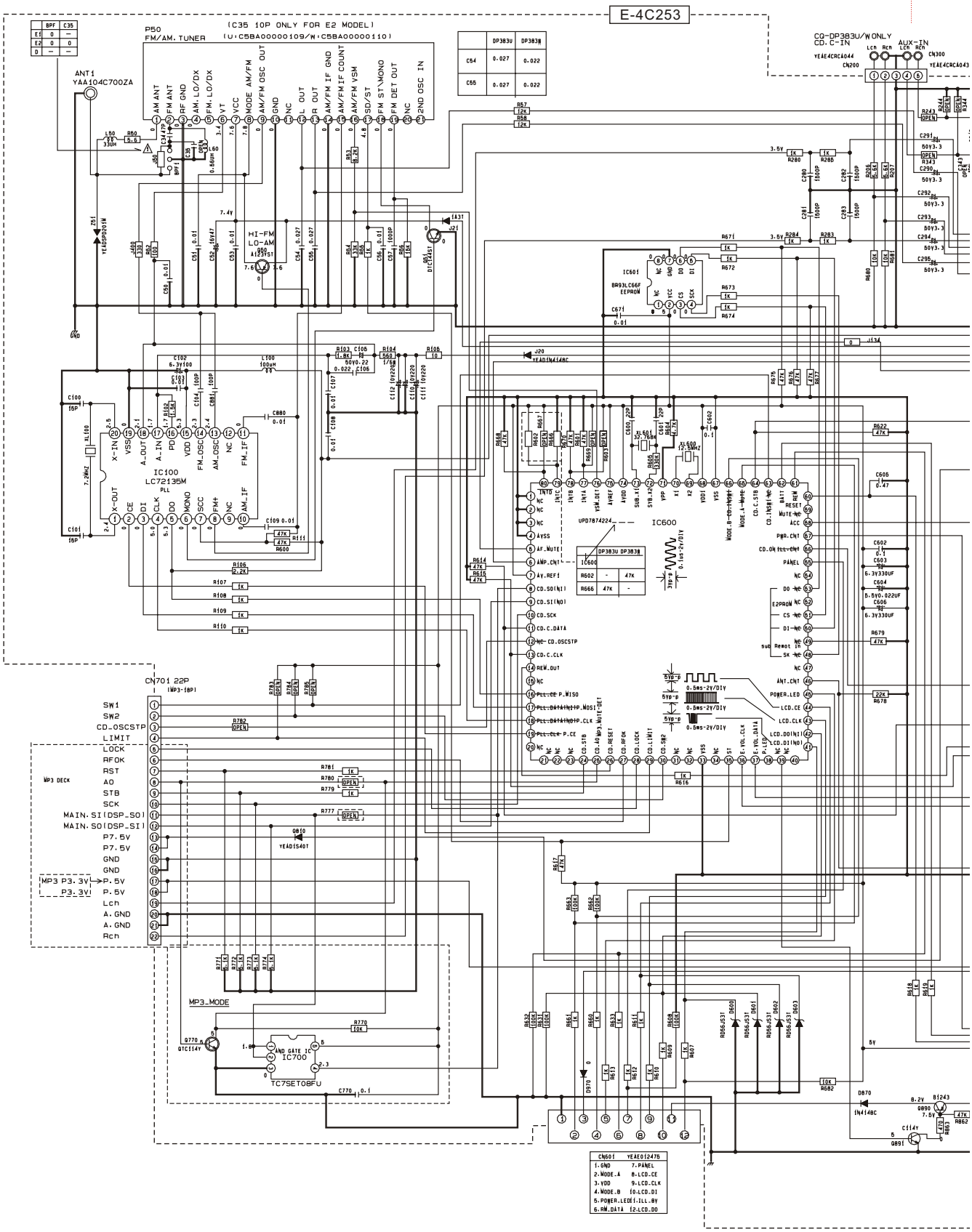

18.2. Main Block (Right Side)

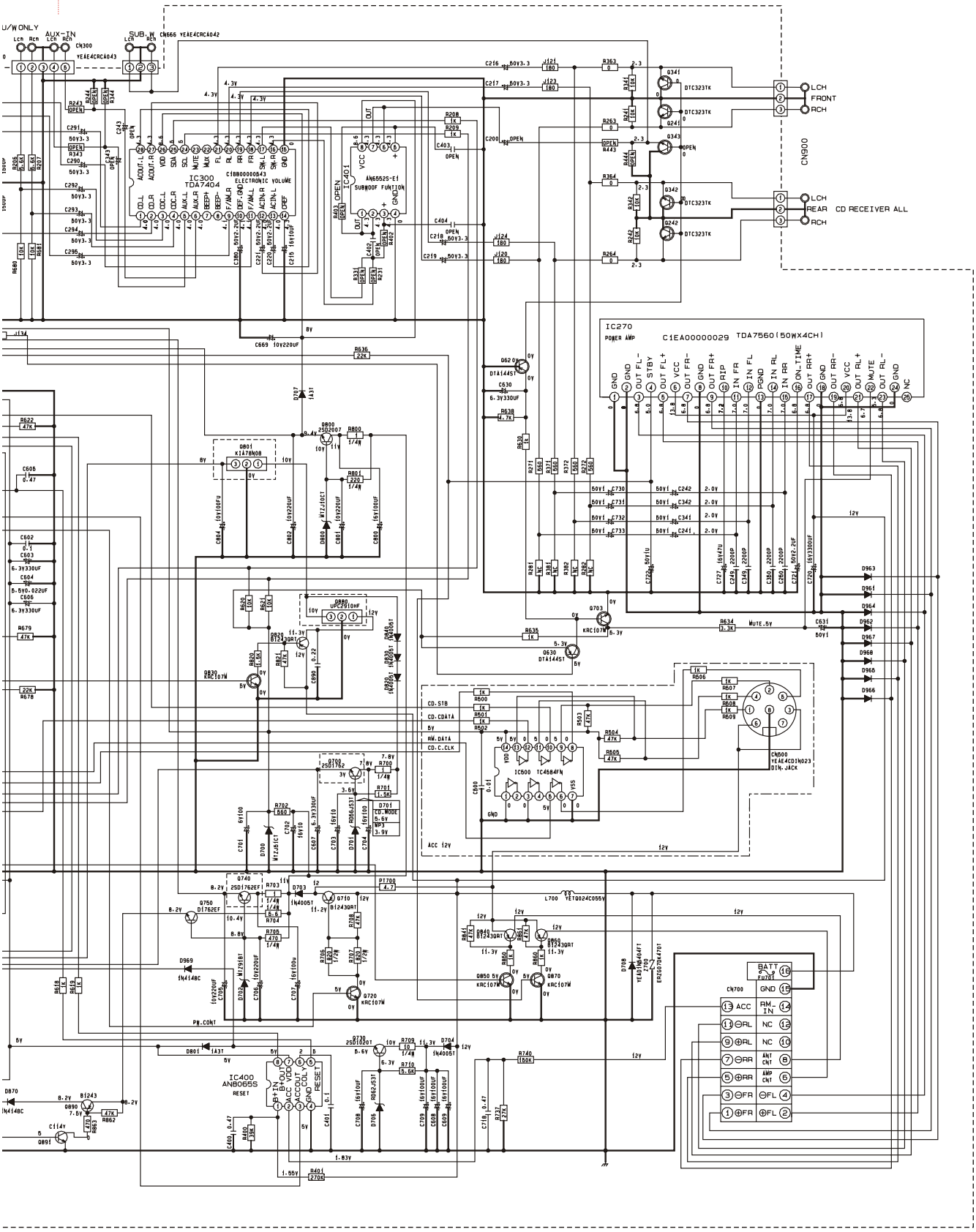

CQ-DP383(U.W.WJ) Main Block

18.3. CD SERVO Block-1 (Left Side)

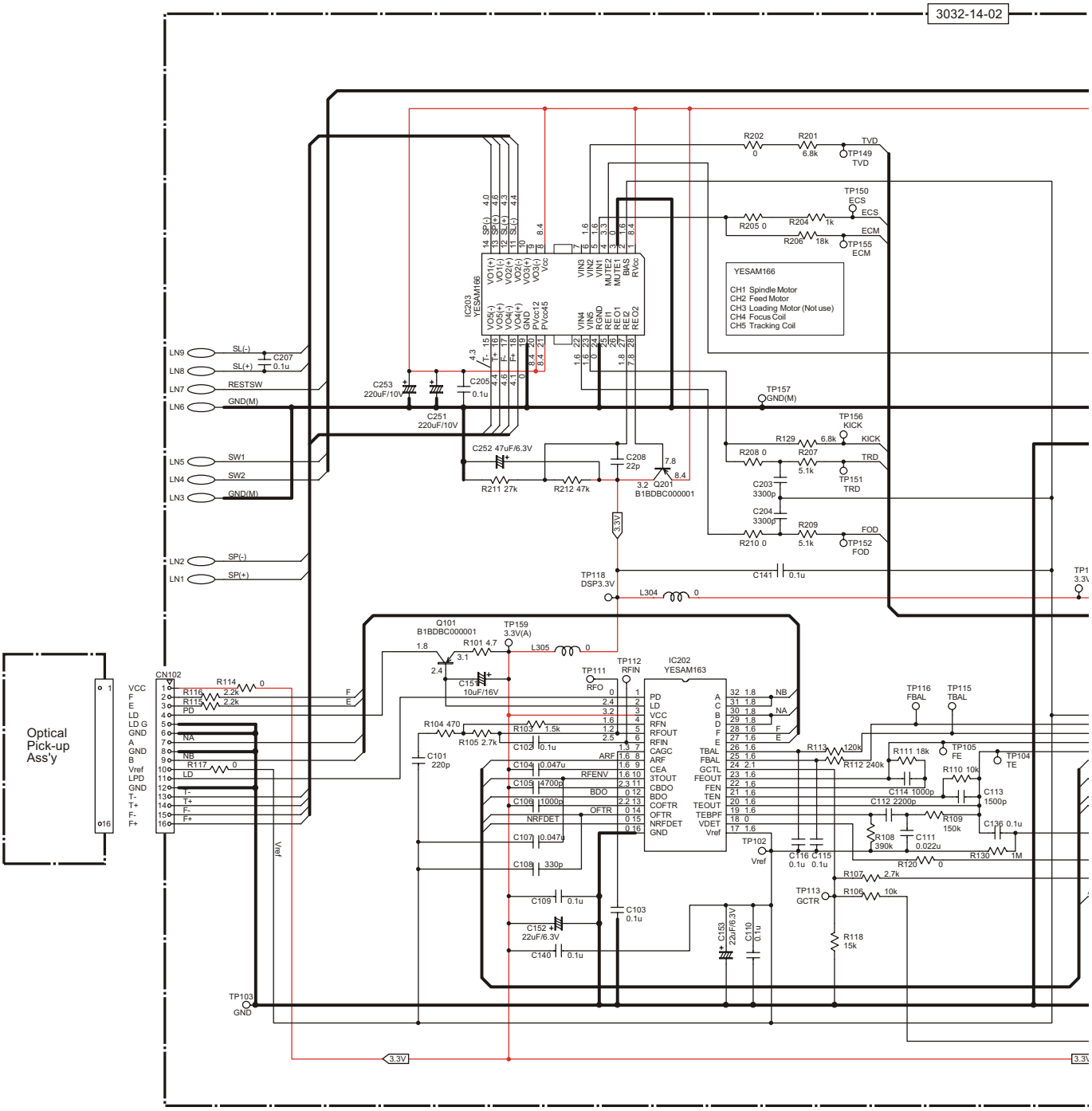

18.4. CD SERVO Block-1 (Right Side)

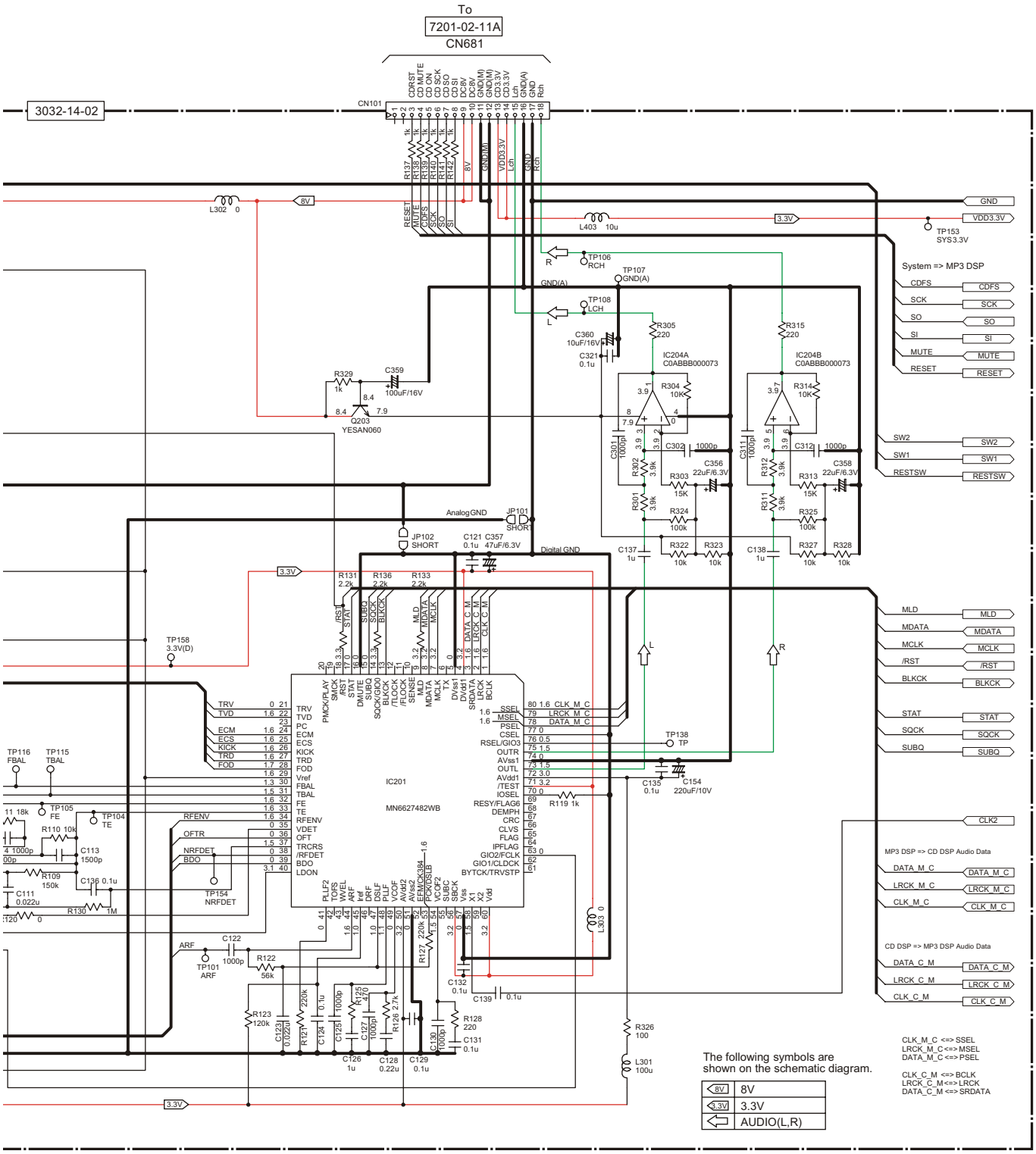

CQ-DP383(U.W.WJ) CD Servo Block-1

18.5. CD SERVO Block-2 (Left Side)

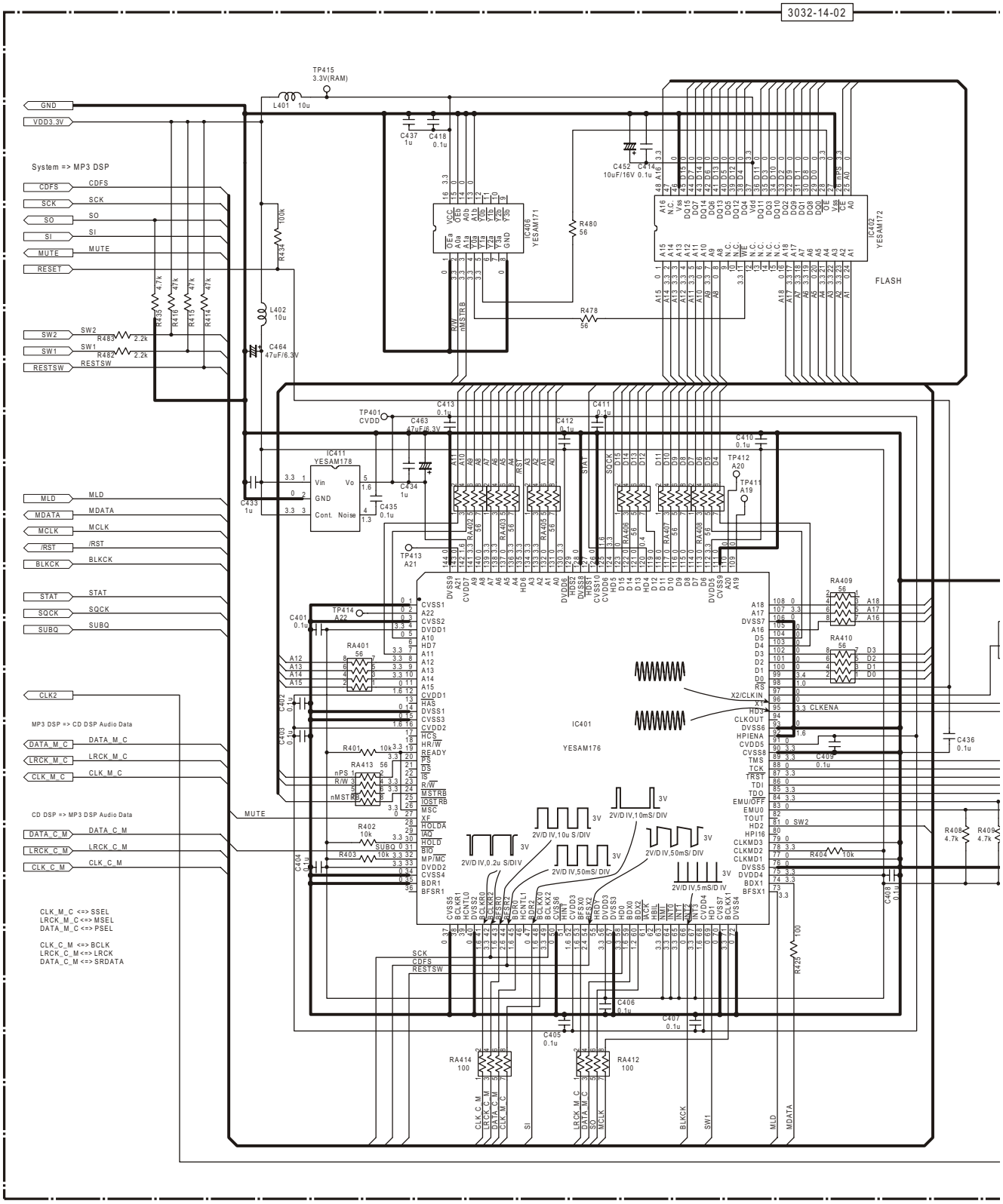

18.6. CD SERVO Block-2 (Right Side)

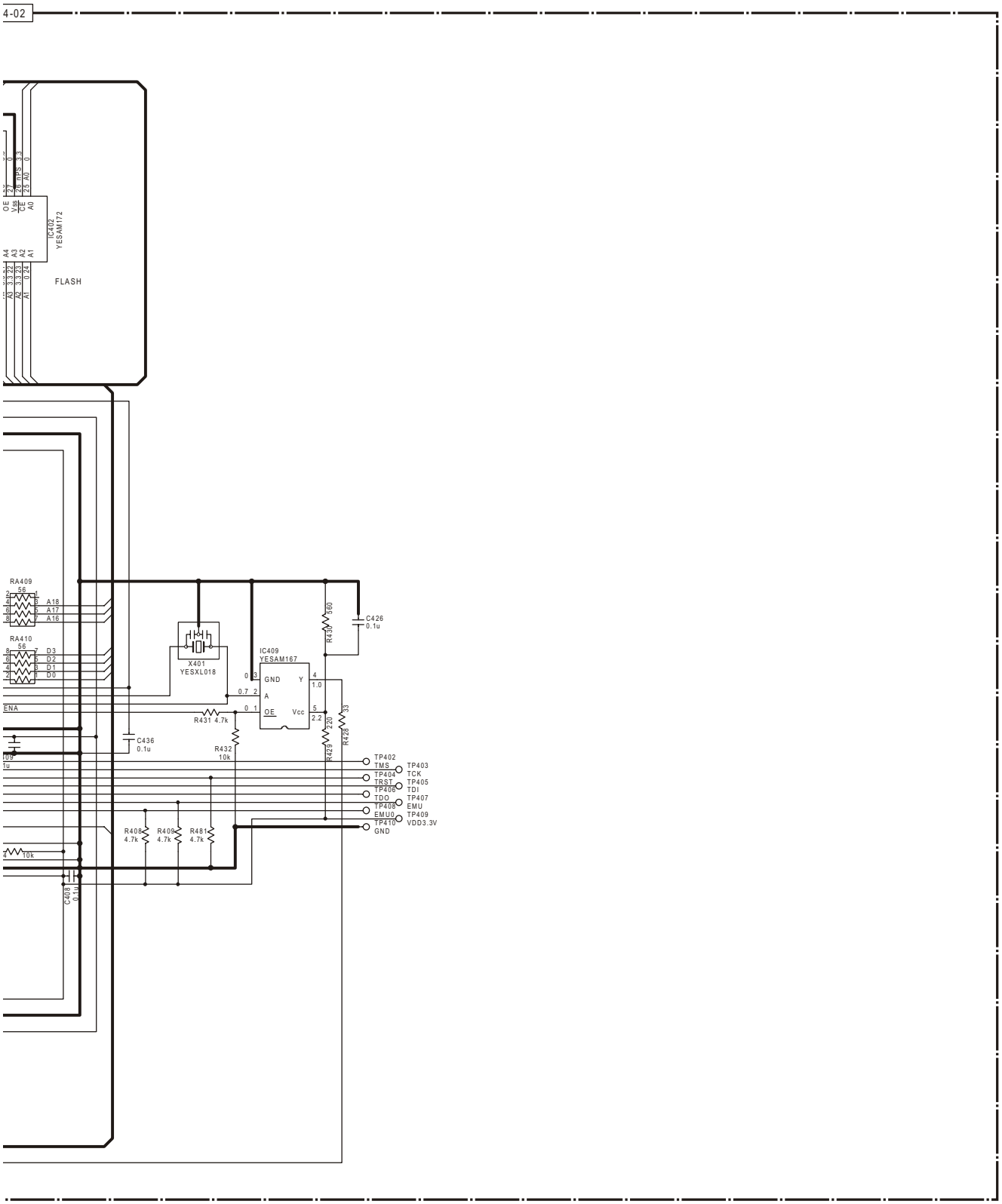

CQ-DP383(U.W.WJ) CD Servo Block-2

Printed in Taiwan
2003.1

TANASHIN

MODEL TN-2001-1020

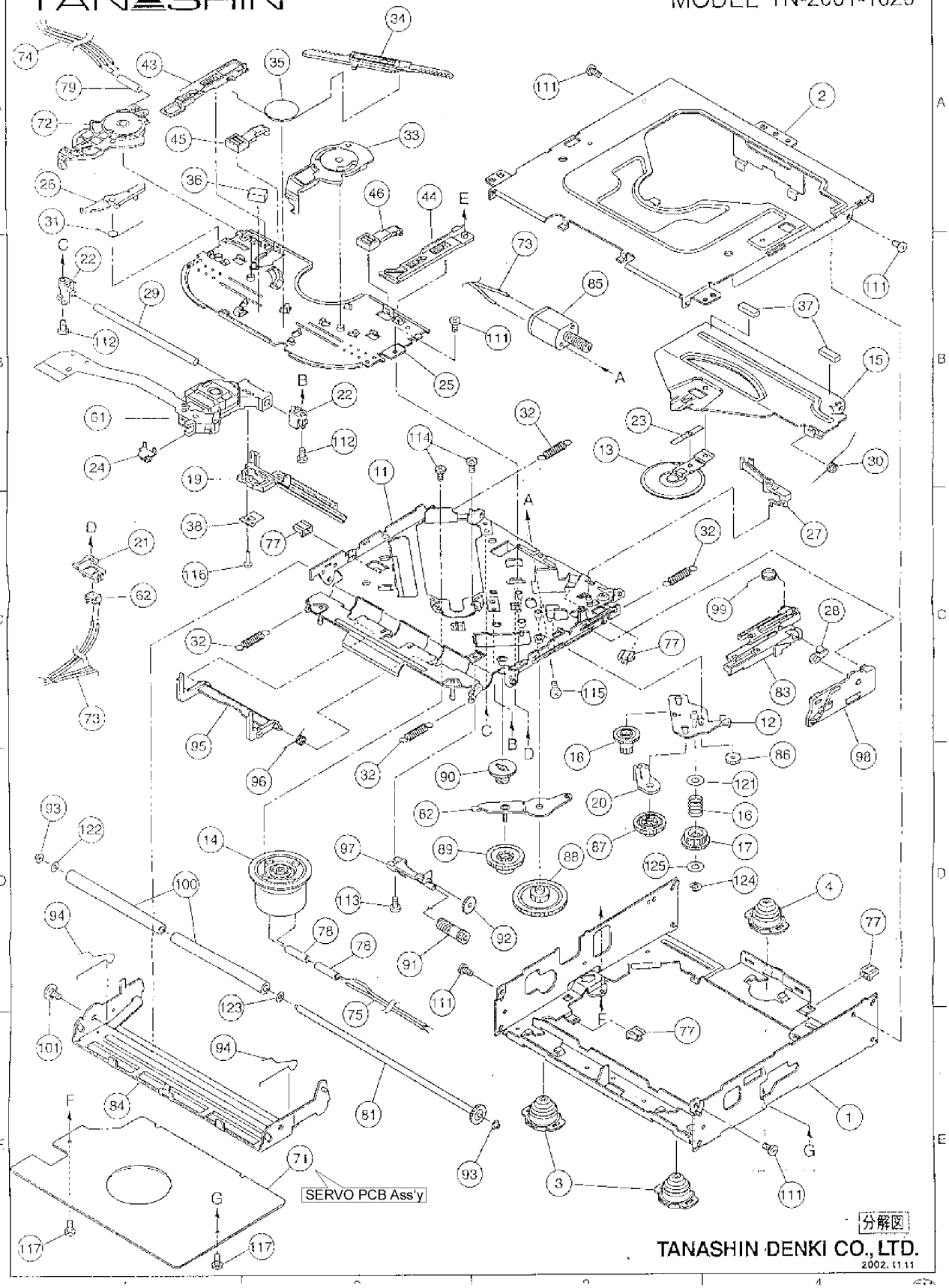

分解図

TANASHIN DENKI CO., LTD.

2002. 11. 11

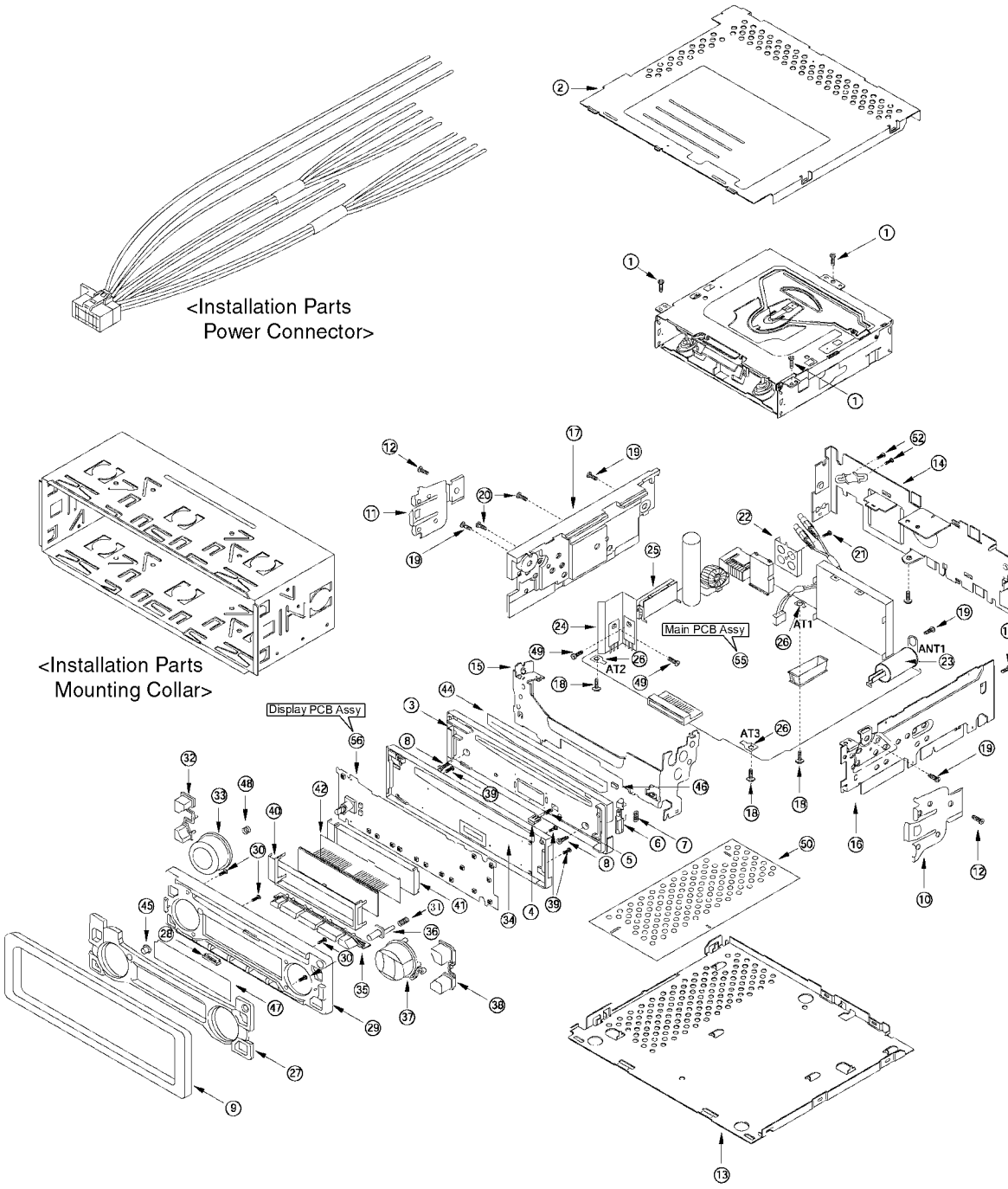
<Installation Parts
Power Connector>
<Installation Parts
Mounting Collar>
Main PCB Assy
Display PCB Assy
AT1
AT2
AT3
ANT1

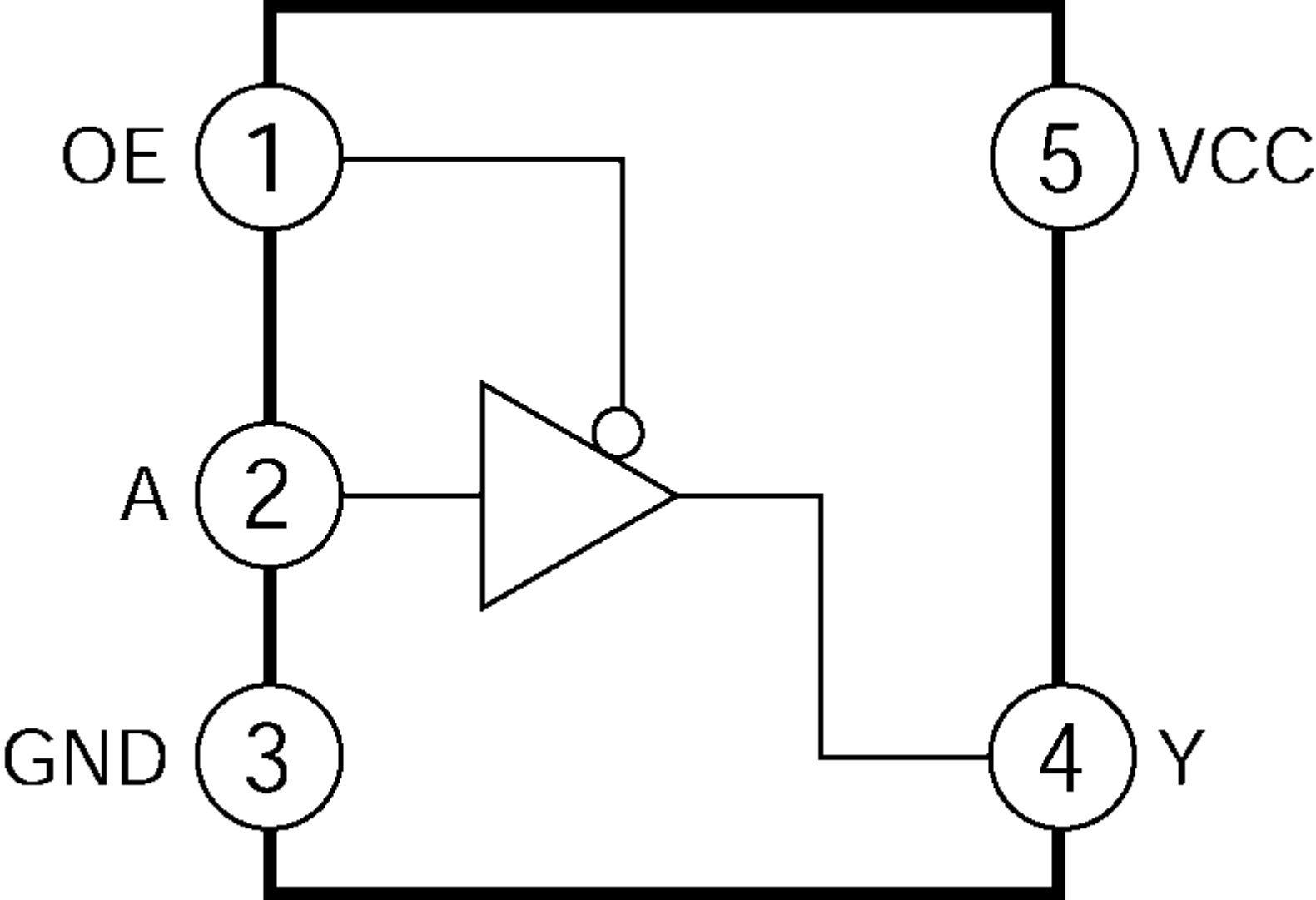
OE
1
5
VCC
A
2
GND
3
4
Y

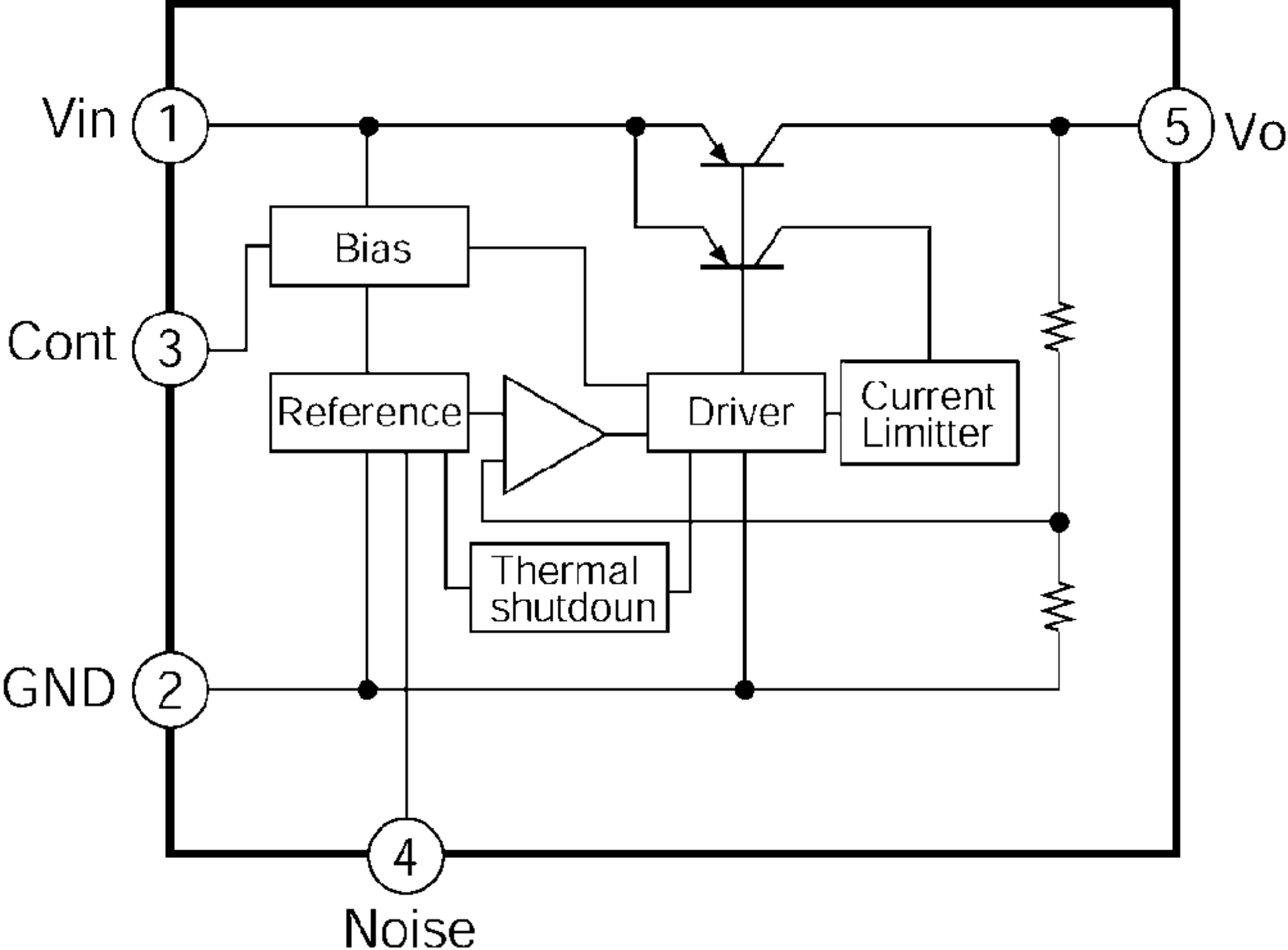
Vin
1
Cont
3
GND
2
4
Noise
5
Vo
Bias
Reference
Driver
Current
Limitter
Thermal
shutdoun

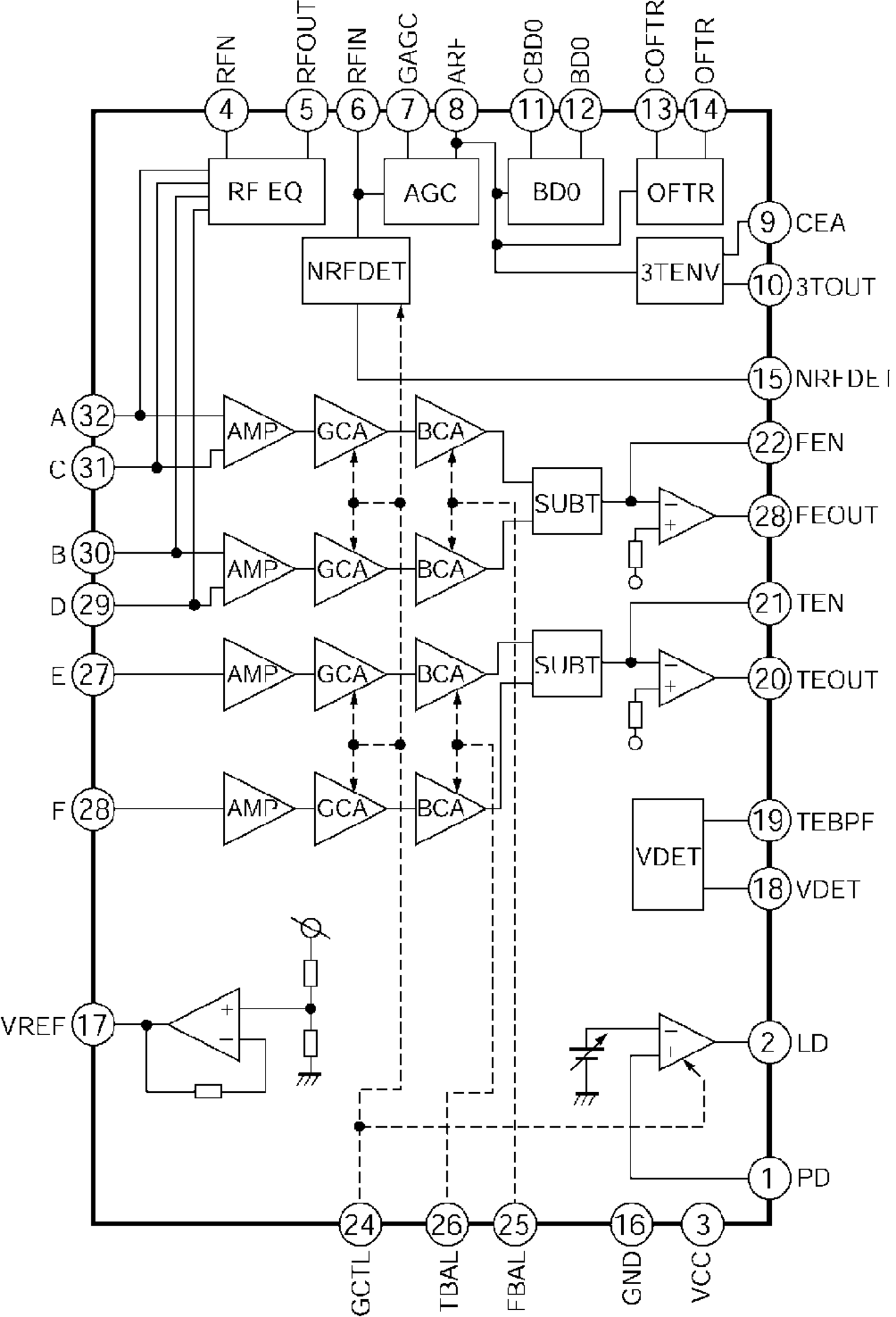
RFN
RFOUT
RFIN
GAGC
ARF
CBD0
BD0
COFTR
OFTR
4
5
6
7
8
11
12
13
14
RF EQ
AGC
BD0
OFTR
NRFDET
3TENV
9 CEA
10 3TOUT
15 NRFDET
A 32
C 31
B 30
D 29
E 27
F 28
AMP
GCA
BCA
SUBT
22 FEN
28 FEOUT
21 TEN
20 TEOUT
19 TEBPF
18 VDET
VDET
VREF 17
2 LD
1 PD
24
26
25
16
3
GCTL
TBAL
FBAL
GND
VCC

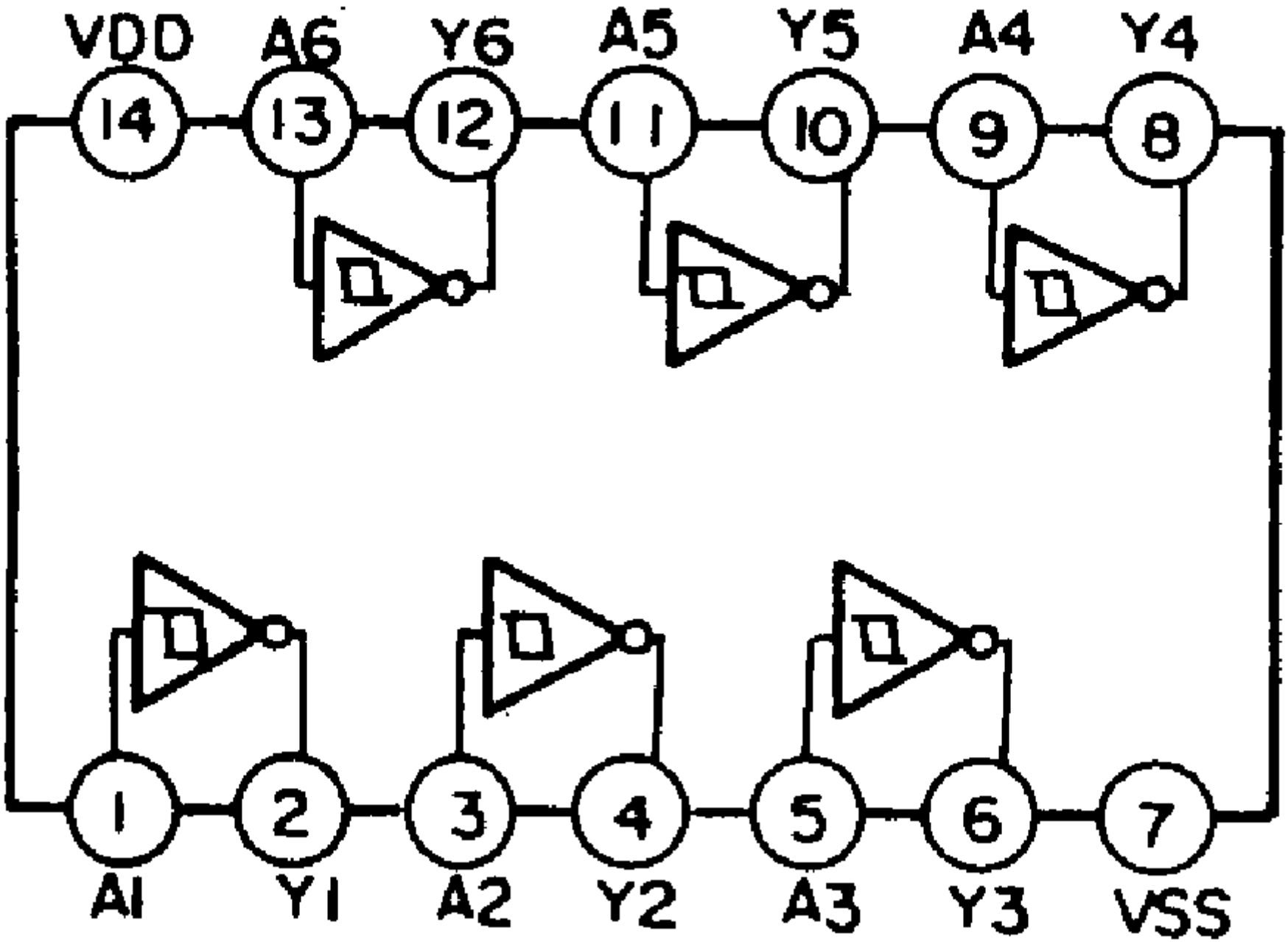
VDD
A6
Y6
A5
Y5
A4
Y4
14
13
12
11
10
9
8
1
2
3
4
5
6
7
A1
Y1
A2
Y2
A3
Y3
VSS

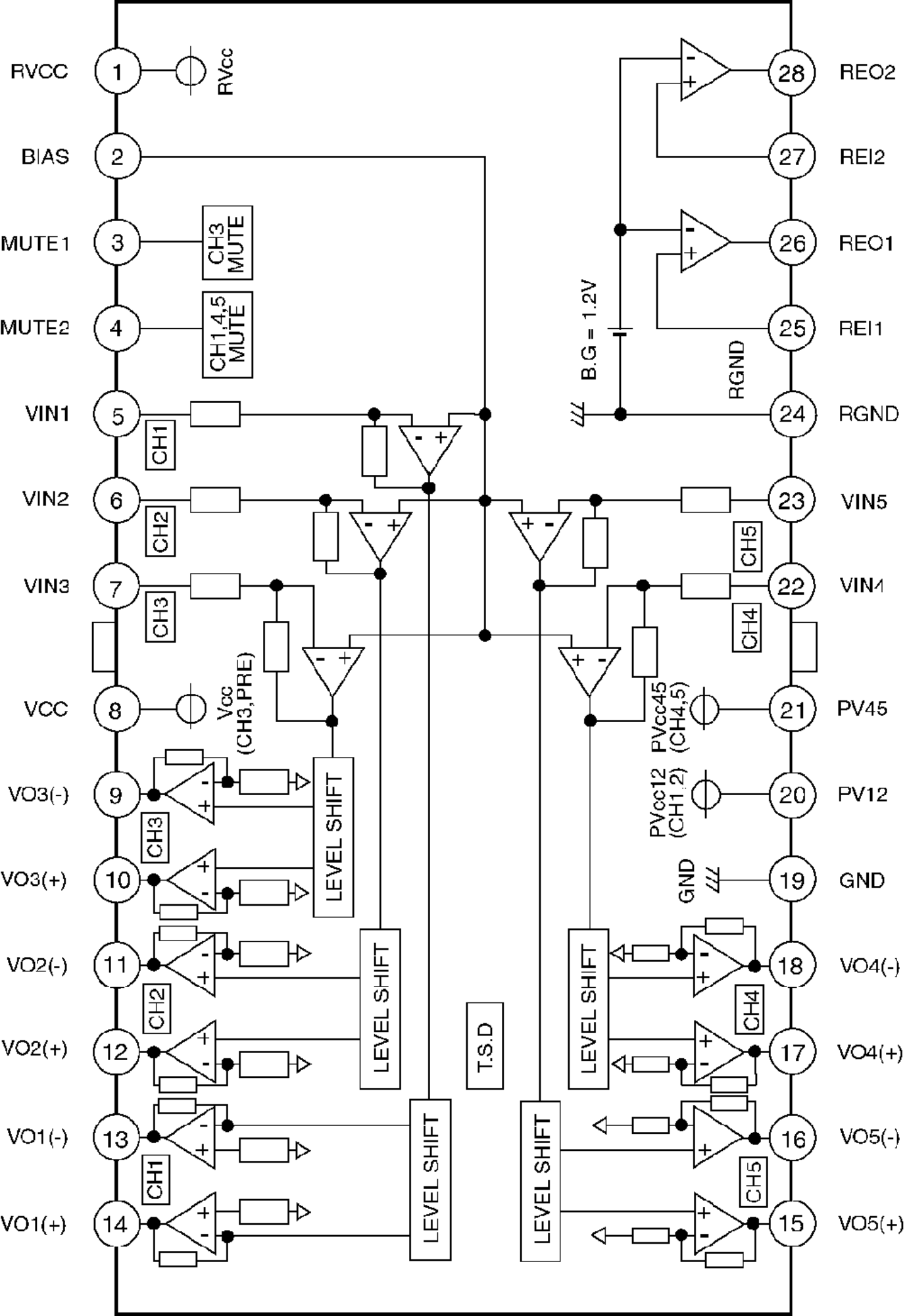
RVCC
1
RVcc
BIAS
2
MUTE1
3
CH3 MUTE
MUTE2
4
CH1,4,5 MUTE
VIN1
5
CH1
VIN2
6
CH2
VIN3
7
CH3
VCC
8
Vcc (CH3,PRE)
VO3(-)
9
CH3
VO3(+)
10
LEVEL SHIFT
VO2(-)
11
CH2
VO2(+)
12
LEVEL SHIFT
VO1(-)
13
CH1
VO1(+)
14
LEVEL SHIFT
T.S.D
LEVEL SHIFT
LEVEL SHIFT
B.G = 1.2V
RGND
28
REO2
27
REI2
26
REO1
25
REI1
24
RGND
23
VIN5
CH5
22
VIN4
CH4
21
PV45
PVcc45 (CH4,5)
20
PV12
PVcc12 (CH1,2)
GND
19
GND
18
VO4(-)
CH4
17
VO4(+)
16
VO5(-)
CH5
15
VO5(+)

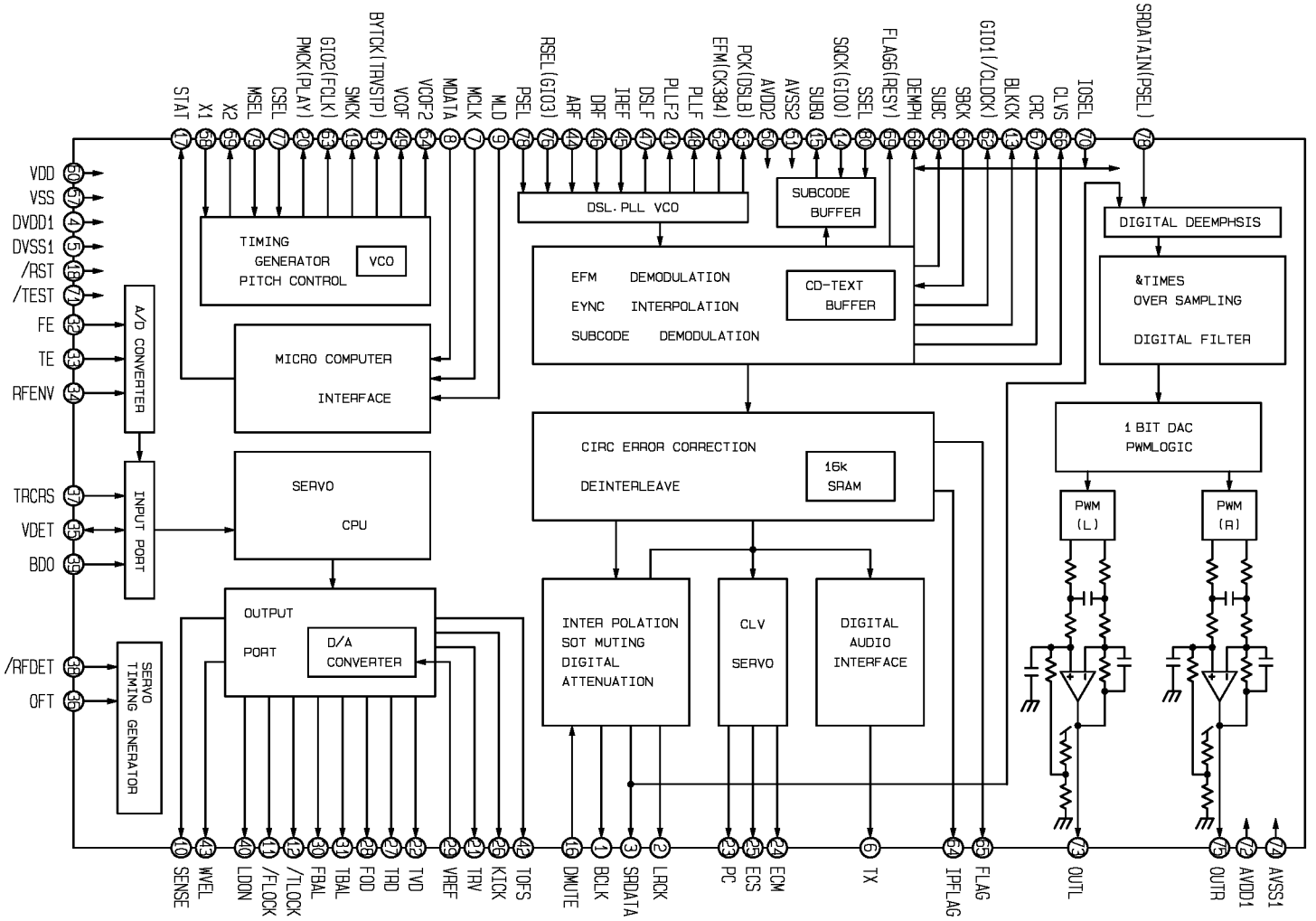
STAT 77
X1 28
X2 29
MSEL 78
CSEL 77
PMCK(PLAY) 20
GIO2(FCLK) 21
SMCK 19
BYTCK(TRVSTP) 31
VCOF 45
VCOF2 44
MDATA 8
MCLK 7
MLD 9
PSEL 78
RSEL(GIO3) 76
ARF 14
DRF 46
IREF 45
DSLF 47
PLLF2 41
PLLF 48
EFM(CK384) 42
PCK(DSLB) 43
AVDD2 30
AVSS2 31
SUBQ 15
SQCK(GIO0) 17
SSEL 80
FLAG6(RESY) 59
DEMPH 58
SUBC 55
SBCK 56
BLKCK 13
CRC 57
CLVS 58
IOSEL 10
SRDATAIN(PSEL) 78
VDD 30
VSS 31
DVDD1 4
DVSS1 5
/RST 16
/TEST 17
FE 32
TE 33
RFENV 34
TRCRS 37
VDET 35
BDO 36
/RFDET 38
OFT 39
TIMING GENERATOR PITCH CONTROL
VCO
DSL. PLL VCO
SUBCODE BUFFER
DIGITAL DEEMPHSIS
EFM DEMODULATION
EYNC INTERPOLATION
SUBCODE DEMODULATION
CD-TEXT BUFFER
&TIMES OVER SAMPLING
DIGITAL FILTER
A/D CONVERTER
MICRO COMPUTER
INTERFACE
CIRC ERROR CORRECTION
DEINTERLEAVE
16k SRAM
1 BIT DAC PWMLOGIC
PWM (L)
PWM (R)
INPUT PORT
SERVO
CPU
OUTPUT PORT
D/A CONVERTER
INTER POLATION SOT MUTING DIGITAL ATTENUATION
CLV SERVO
DIGITAL AUDIO INTERFACE
SERVO TIMING GENERATOR
SENSE 10
WVEL 13
LDON 40
/FLOCK 11
/TLOCK 12
FBAL 30
TBAL 31
FOD 28
TRD 27
TVD 22
VREF 26
TRV 23
KICK 25
TOFS 42
DMUTE 16
BCLK 1
SRDATA 3
LRCK 2
PC 23
ECS 25
ECM 24
TX 6
IPFLAG 64
FLAG 65
OUTL 73
OUTR 75
AVDD1 72
AVSS1 74

CAUTION:

This product utilizes a laser diode with the unit turned "on", laser radiation is emitted from the pickup lens.

Laser radiation from the pickup lens is safety level, but be sure the followings:

1. Do not disassemble the optical pickup unit, since radiation from exposed laser diode is dangerous.
2. Do not adjust the variable resistor on the pickup unit. It was already adjusted.
3. Do not look at the focus lens using optical instruments.
4. Recommend not to look at pickup lens for a long time.

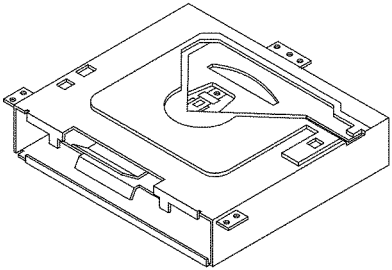

Deck Ass'y (Upper Side)

Caution

This Product utilizes a laser.

Use of controls or adjustments or performance of procedures other than those specified herein may result in hazardous radiation exposure.

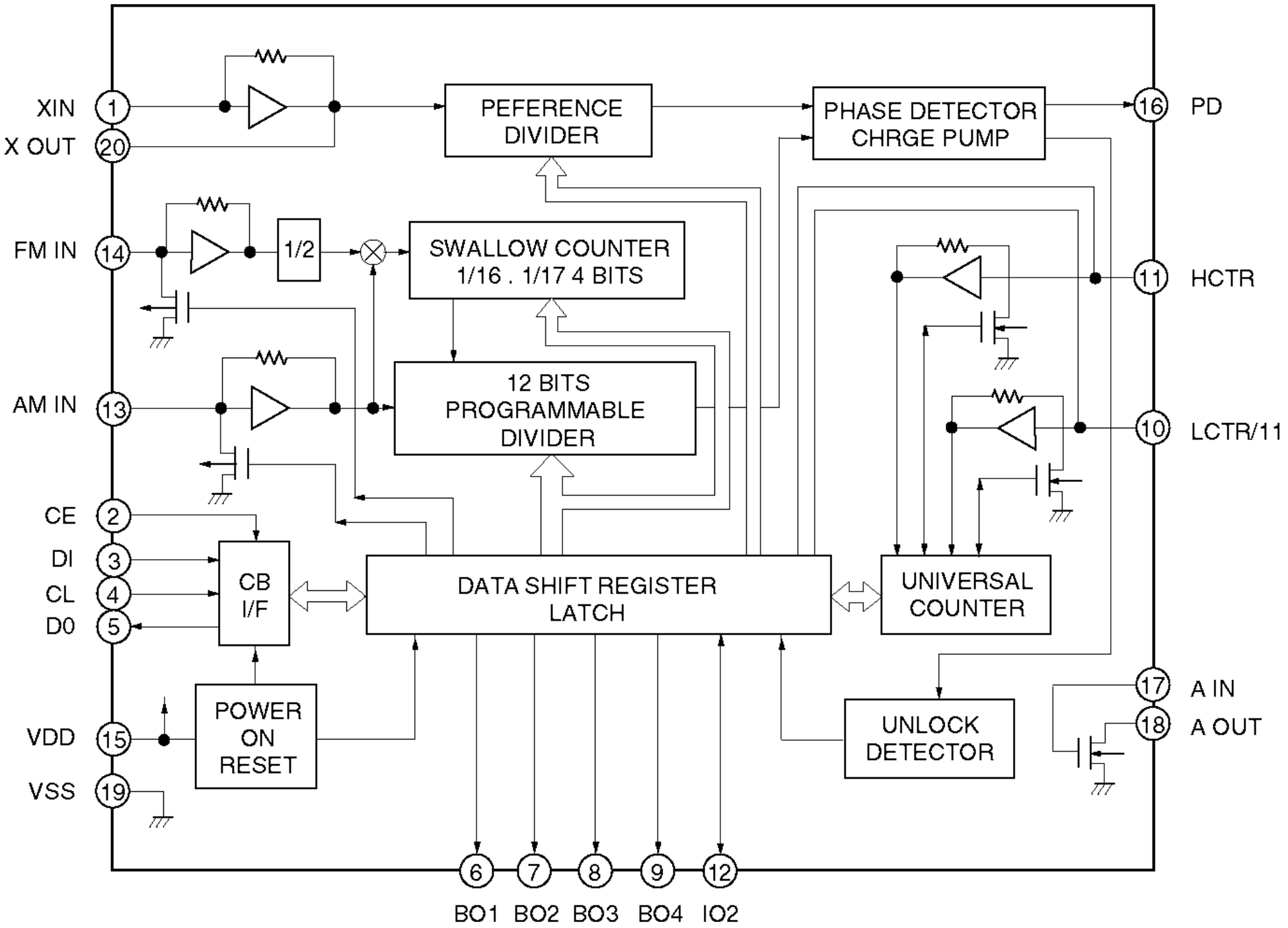
XIN
X OUT
FM IN
AM IN
CE
DI
CL
D0
VDD
VSS
PEFERENCE DIVIDER
PHASE DETECTOR CHRGE PUMP
PD
1/2
SWALLOW COUNTER 1/16 . 1/17 4 BITS
12 BITS PROGRAMMABLE DIVIDER
HCTR
LCTR/11
CB I/F
DATA SHIFT REGISTER LATCH
UNIVERSAL COUNTER
POWER ON RESET
UNLOCK DETECTOR
A IN
A OUT
BO1
BO2
BO3
BO4
IO2

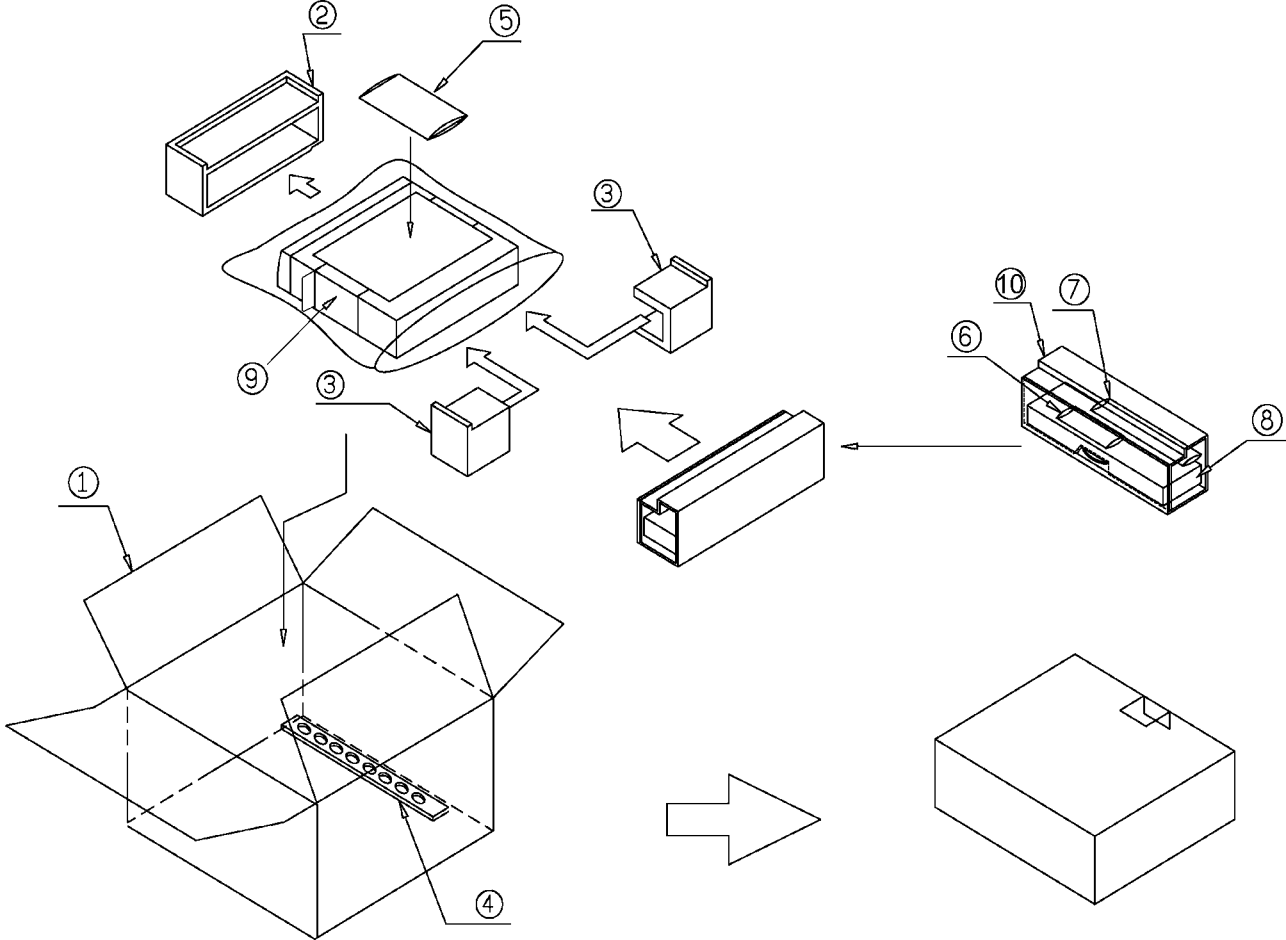
②
⑤
③
⑩
⑦
⑥
⑧
⑨
③
①
④

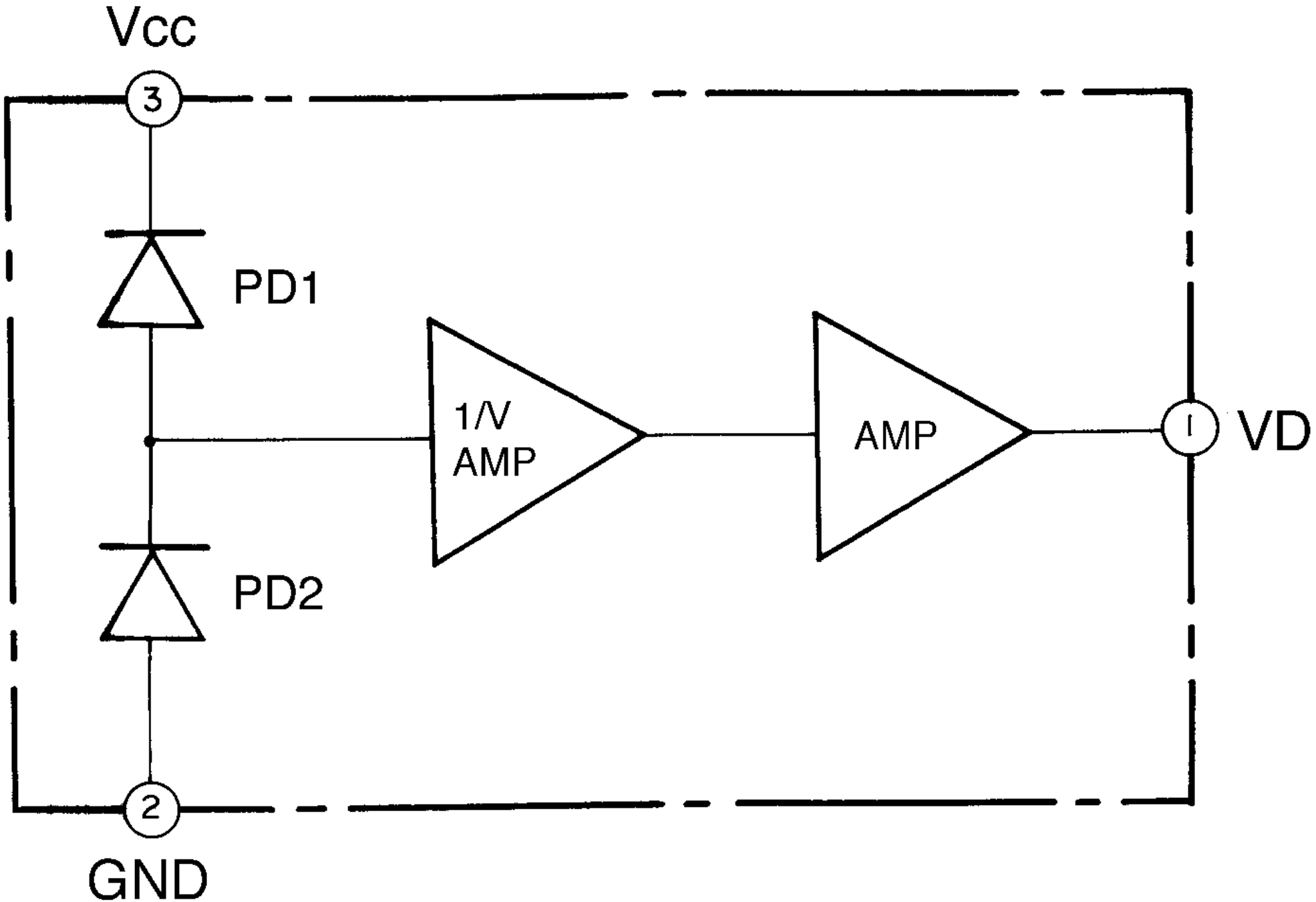
Vcc
3
PD1
1/V
AMP
AMP
1
VD
PD2
2
GND

Note:

1. Be sure to make your orders of replacement parts according to this list.
2. Important safty notice: Component, indentified by ⚠ mark have special characteristics important for safety. when replacing any of these components, use only manufacturer's specified parts.
3. Location keys in the remarks column indicates the general location of the parts shown in the exploded drawing. as in a load map.
4. The marking (RTL) indicates that Retention Time is limited for this item. After the discontinuation of assembly in production, the item will continue to be availability is dependent on the type of assembly, and in accordance with the laws governing part and product retention. Aft the end of this period, the assembly will no longer be available.
5. "T" marks in remarks colum are indicated supply parts of TAMACO.

- Order intake period is basically six months after the first shipment

Note:

1. Be sure to make your orders of replacement parts according to this list.
2. Important safty notice: Component, indentified by ⚠ mark have special characteristics important for safety. when replacing any of these components, use only manufacturer's specified parts.
3. Location keys in the remarks column indicates the general location of the parts shown in the exploded drawing. as in a load map.
4. The marking (RTL) indicates that Retention Time is limited for this item. After the discontinuation of assembly in production, the item will continue to be availability is dependent on the type of assembly, and in accordance with the laws governing part and product retention. Aft the end of this period, the assembly will no longer be available.
5. "T" marks in remarks colum are indicated supply parts of TAMACO.

- Order intake period is basically six months after the first shipment

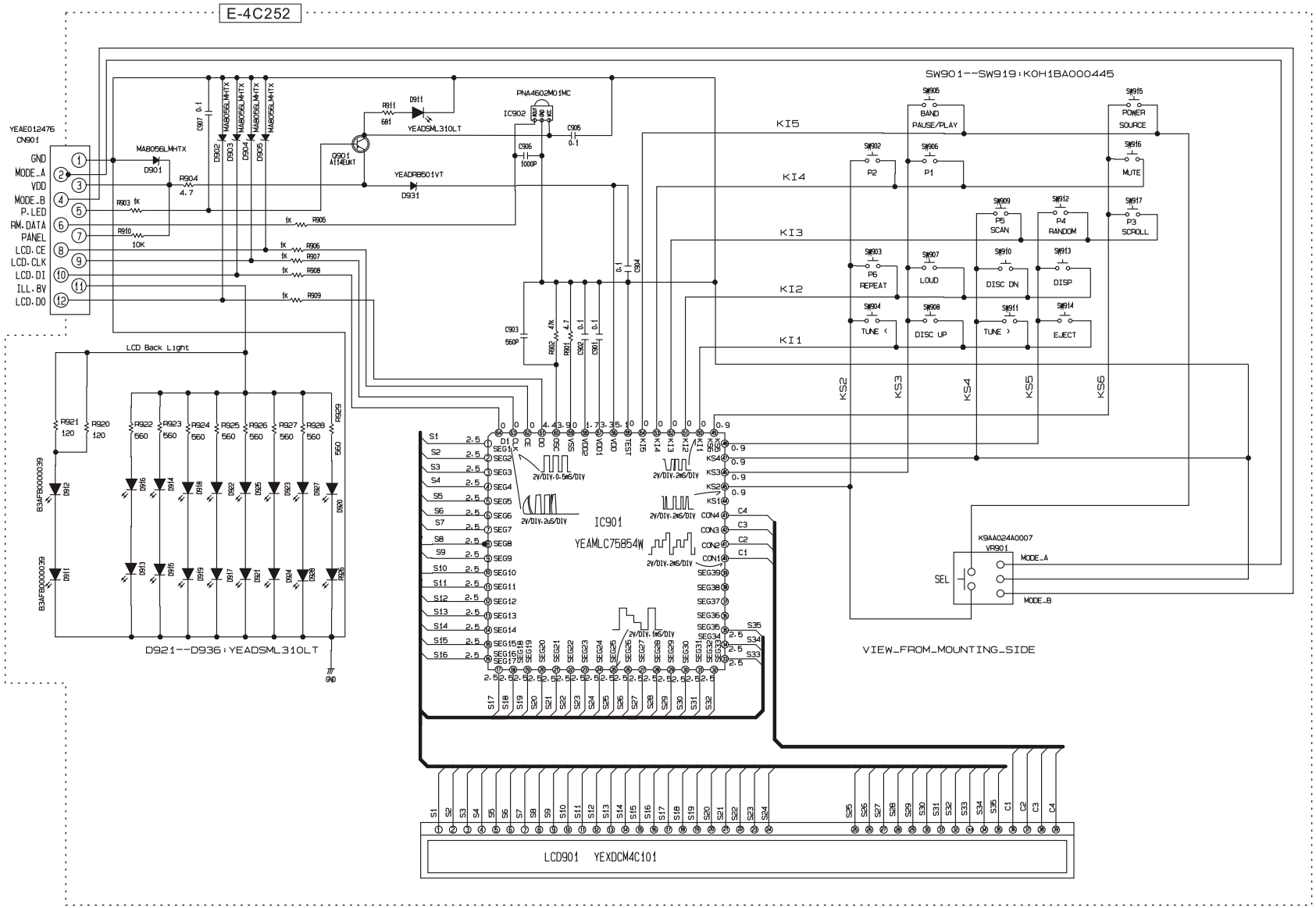

CQ-DP383(U.W.WJ) Display Block

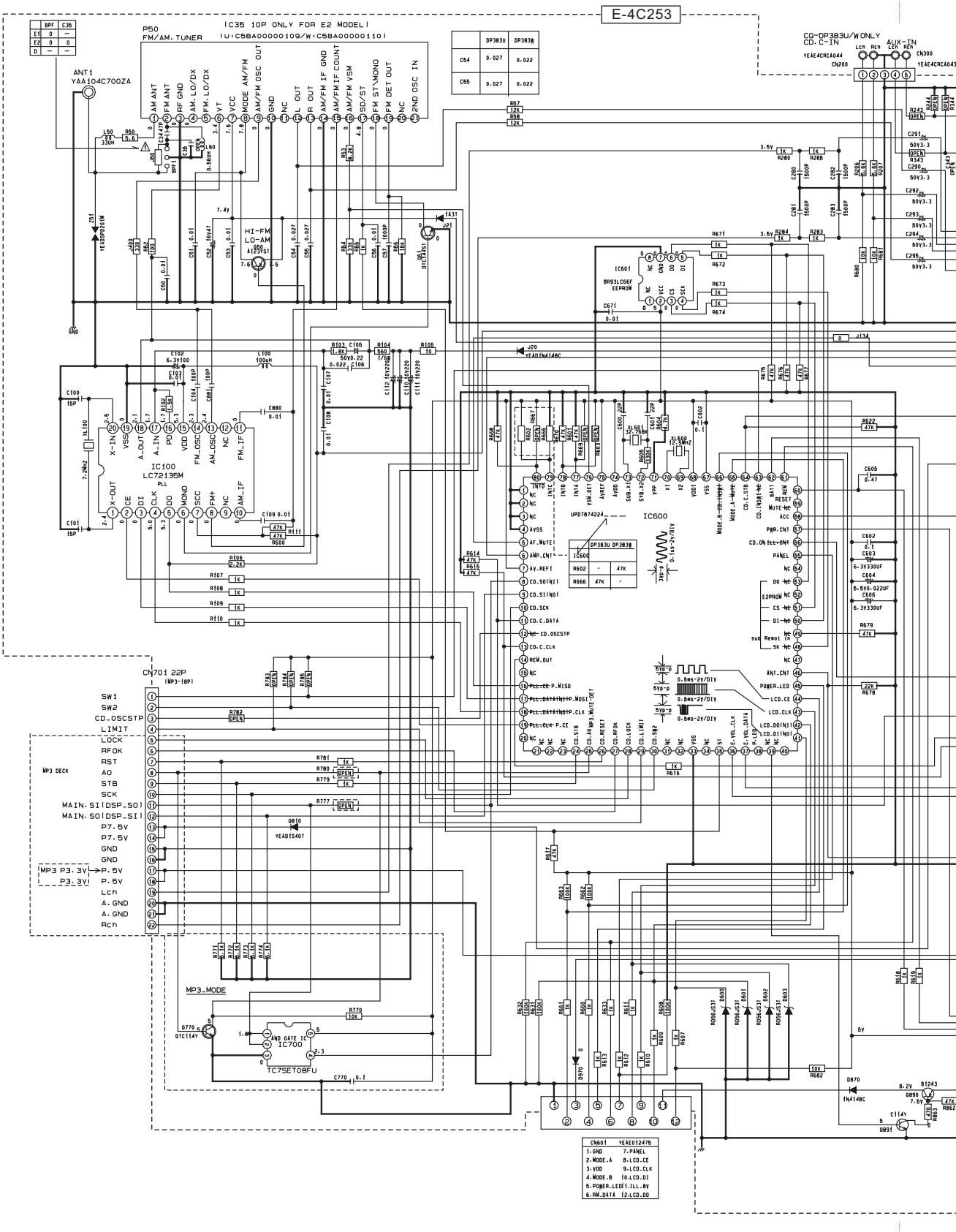
E-4C253
P50
FM/AM. TUNER
(C35 10P ONLY FOR E2 MODEL)
(U:C5BA00000109/W:C5BA00000110)
ANT1
YAA104C700ZA
CO-DP383U/W ONLY
CD. C-IN
AUX-IN
CN300
YEAE4CRC4043
CN200
IC601
BR93LC66F
EEPROM
IC100
LC72135M
PLL
IC600
UPD7874224
IC700
TC7SET08FU
CN701 22P
(WP3-(8P)
WP3 DECK
MP3_MODE
CN601 YEAE012476
1.GND
2.MODE.A
3.VDD
4.MODE.B
5.POWER.LED
6.RW.DATA
7.PANEL
8.LCD.CE
9.LCD.CLK
10.LCD.DI
11.ILL.BY
12.LCD.DO

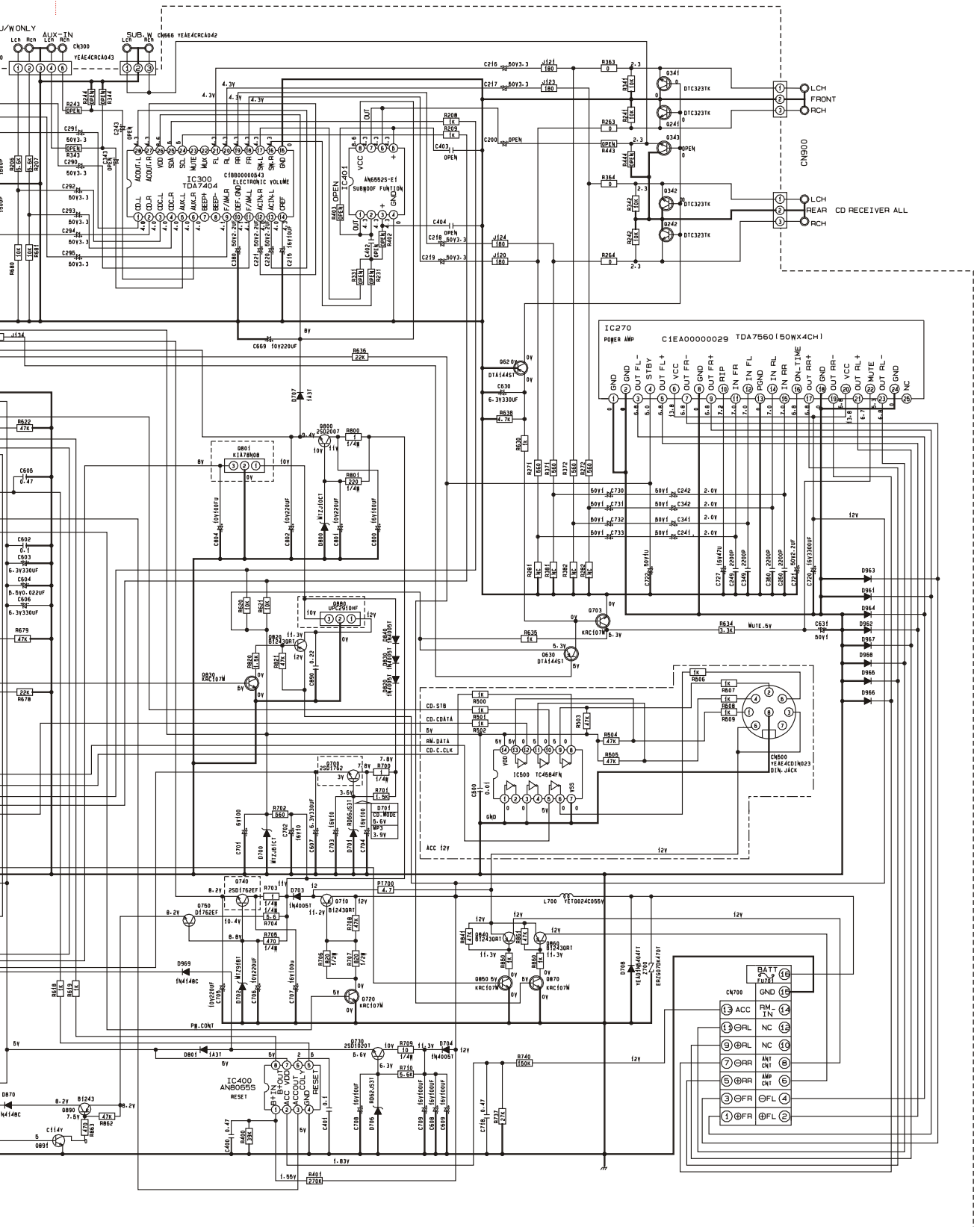

CQ-DP383(U.W.WJ) Main Block

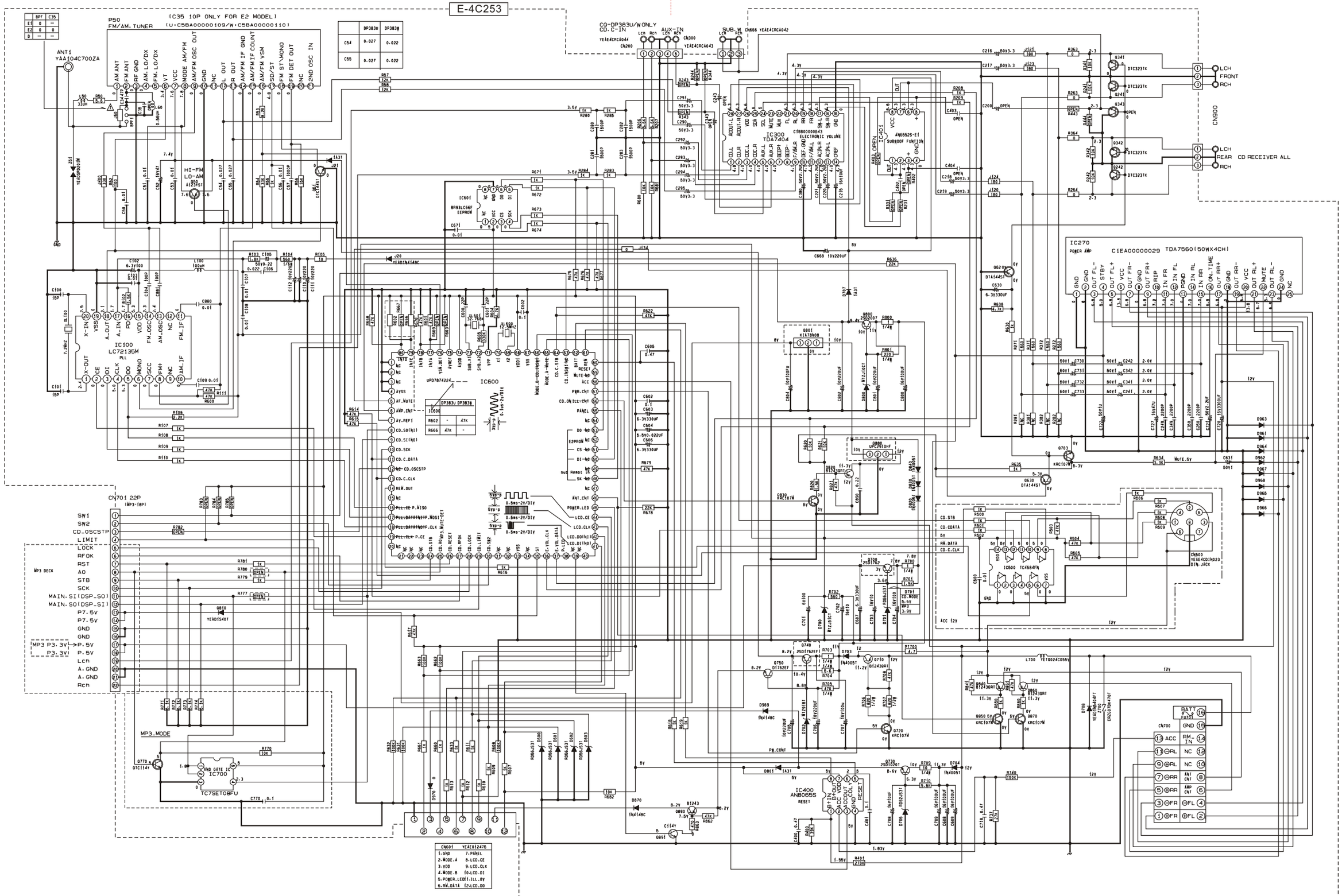

CQ-DP383(U.W.WJ) Main Block

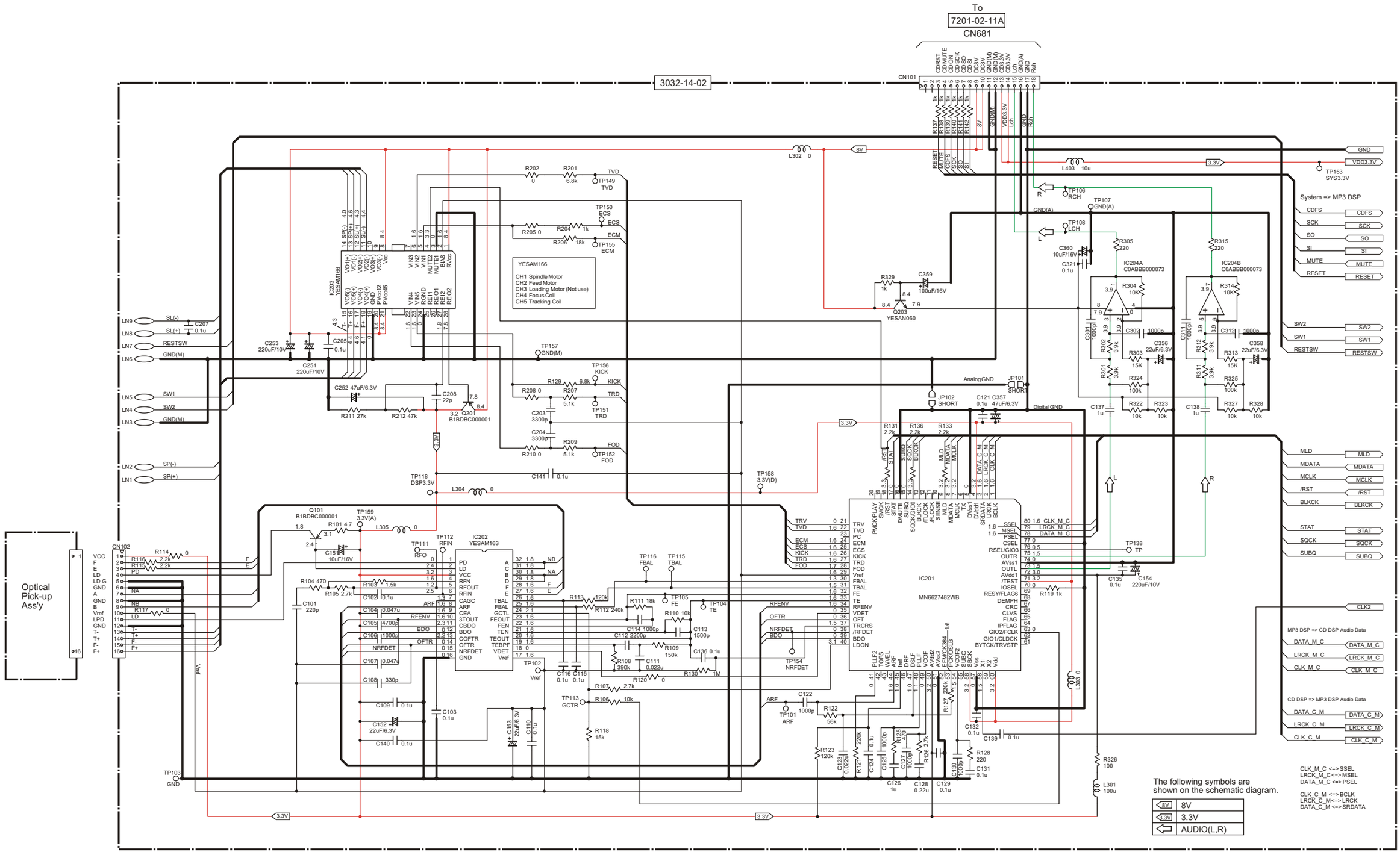

CQ-DP383(U.W.WJ) CD Servo Block-1

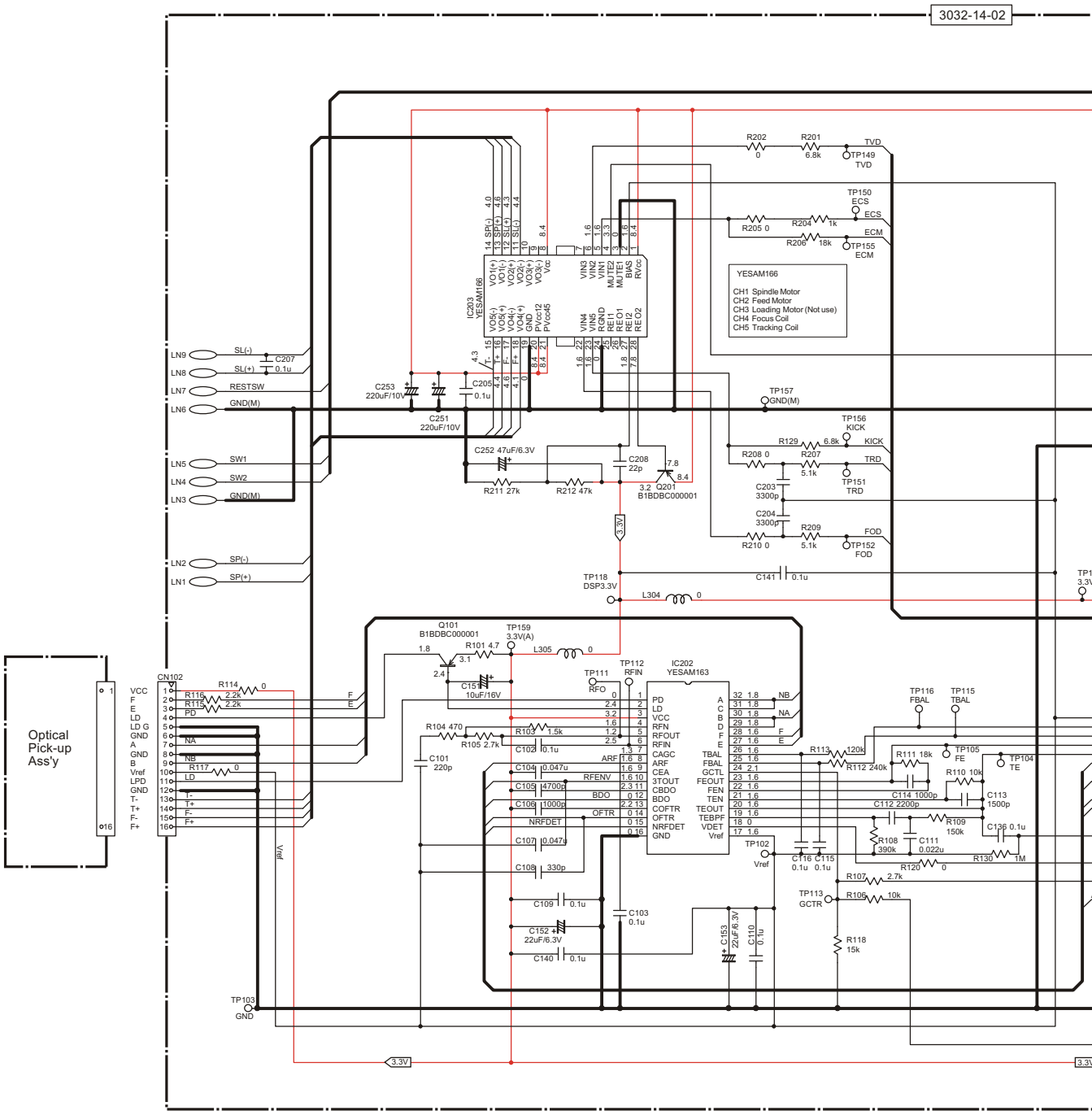
3032-14-02
Optical Pick-up Ass'y
CN102
VCC
F
E
LD
LD G
GND
A
GND
B
Vref
LPD
GND
T-
T+
F-
F+
IC203 YESAM166
IC202 YESAM163
YESAM166
CH1 Spindle Motor
CH2 Feed Motor
CH3 Loading Motor (Not use)
CH4 Focus Coil
CH5 Tracking Coil
Q101 B1BDBC000001
Q201 B1BDBC000001
TP149 TVD
TP150 ECS
TP155 ECM
TP157 GND(M)
TP156 KICK
TP151 TRD
TP152 FOD
TP118 DSP3.3V
TP159 3.3V(A)
TP111 RFO
TP112 RFIN
TP116 FBAL
TP115 TBAL
TP105 FE
TP104 TE
TP102 Vref
TP113 GCTR
TP103 GND
LN9 SL(-)
LN8 SL(+)
LN7 RESTSW
LN6 GND(M)
LN5 SW1
LN4 SW2
LN3 GND(M)
LN2 SP(-)
LN1 SP(+)
3.3V

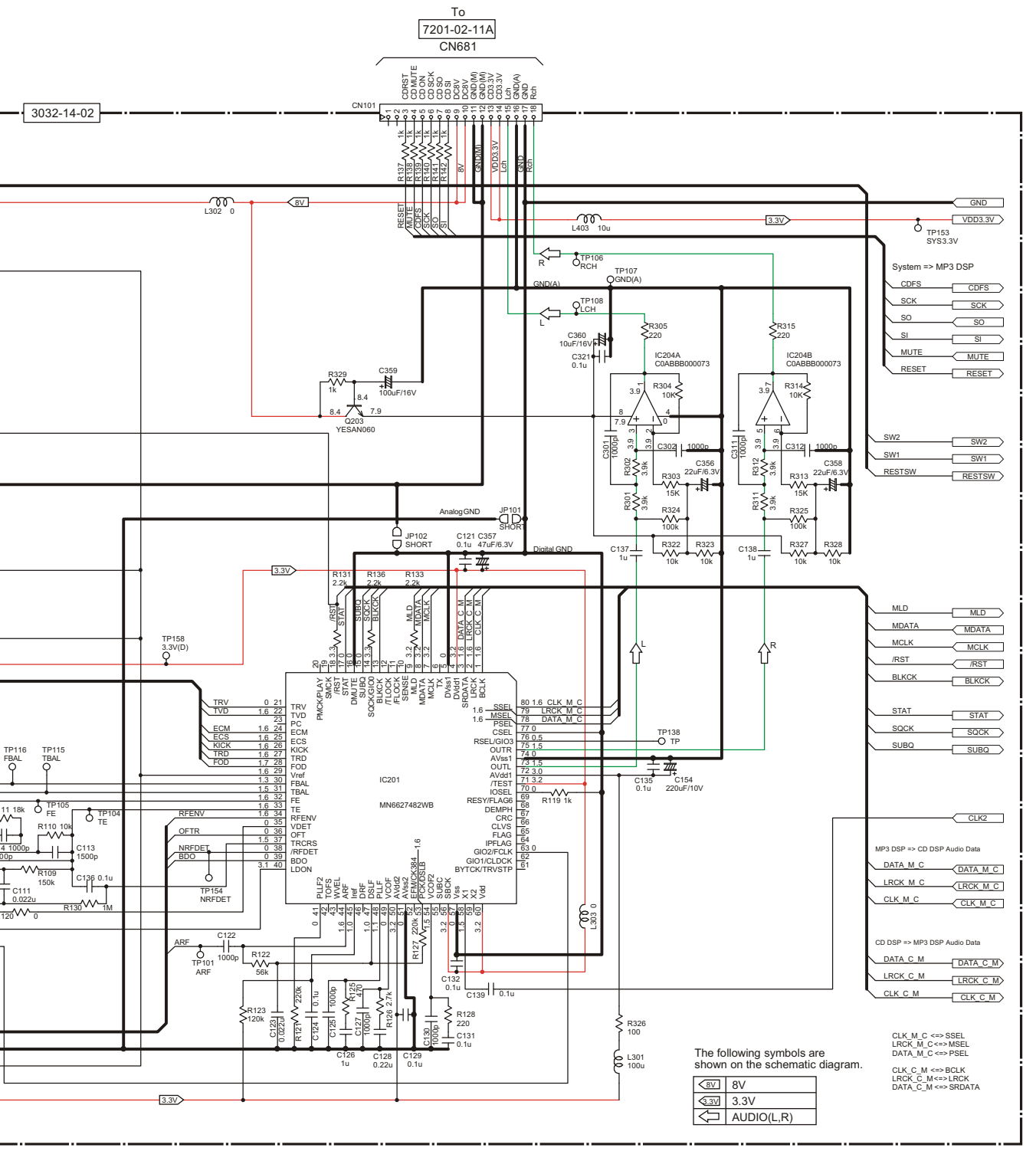
To
7201-02-11A
CN681
3032-14-02
CN101
System => MP3 DSP
CDFS
SCK
SO
SI
MUTE
RESET
SW2
SW1
RESTSW
MLD
MDATA
MCLK
/RST
BLKCK
STAT
SQCK
SUBQ
CLK2
MP3 DSP => CD DSP Audio Data
DATA_M_C
LRCK_M_C
CLK_M_C
CD DSP => MP3 DSP Audio Data
DATA_C_M
LRCK_C_M
CLK_C_M
GND
VDD3.3V
TP153
SYS3.3V
IC204A
C0ABBB000073
IC204B
C0ABBB000073
Q203
YESAN060
Analog GND
Digital GND
JP101
SHORT
JP102
SHORT
IC201
MN6627482WB
TP158
3.3V(D)
TP116
FBAL
TP115
TBAL
TP105
FE
TP104
TE
TP154
NRFDET
TP101
ARF
TP138
TP
RFENV
OFTR
NRFDET
BDO
ARF
CLK_M_C <=> SSEL
LRCK_M_C <=> MSEL
DATA_M_C <=> PSEL
CLK_C_M <=> BCLK
LRCK_C_M <=> LRCK
DATA_C_M <=> SRDATA
The following symbols are shown on the schematic diagram.
8V 8V
3.3V 3.3V
AUDIO(L,R)

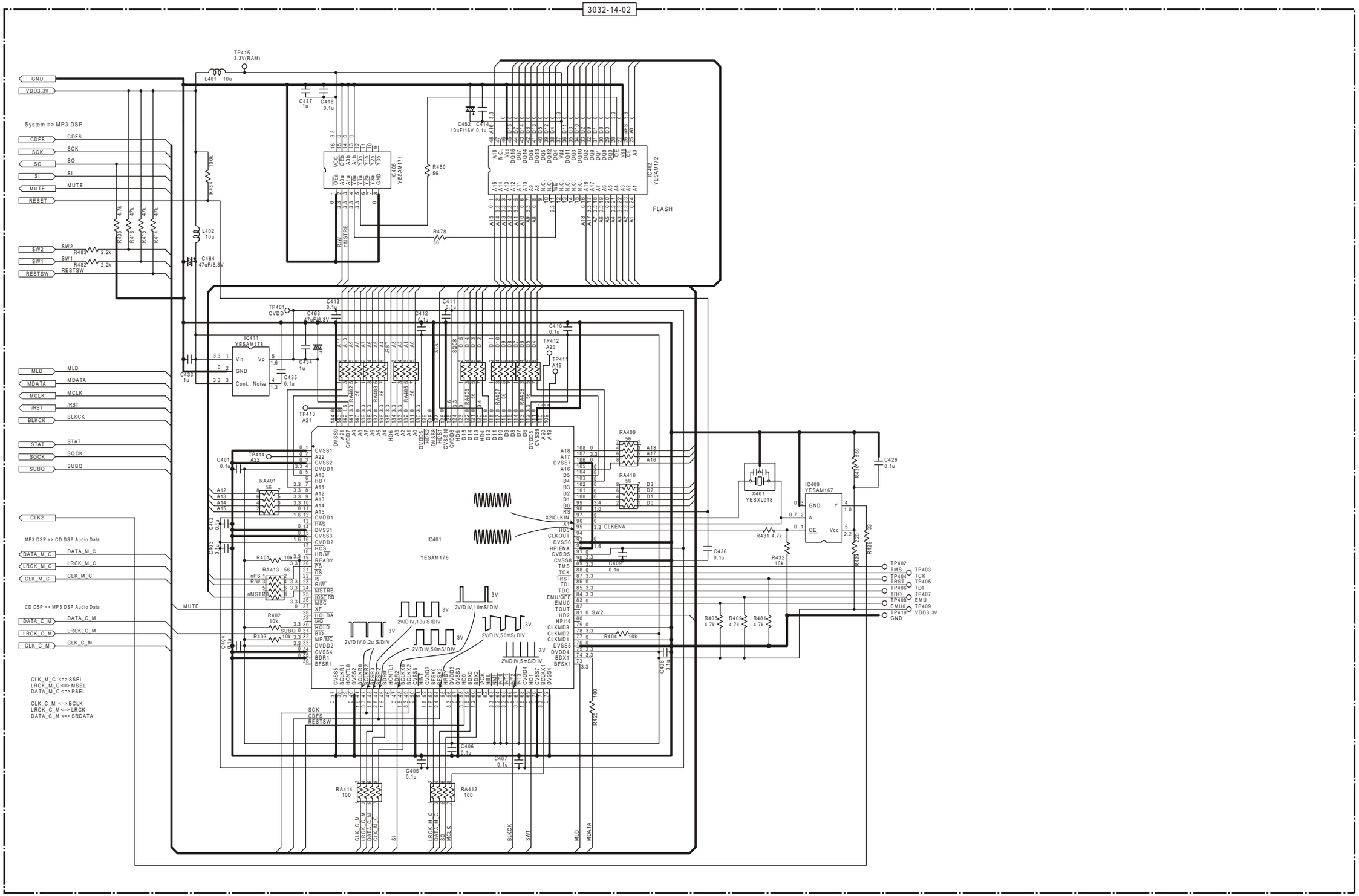
System => MP3 DSP
MP3 DSP => CD DSP Audio Data
CD DSP => MP3 DSP Audio Data
CLK_M_C <=> SSEL
LRCK_M_C <=> MSEL
DATA_M_C <=> PSEL
CLK_C_M <=> BCLK
LRCK_C_M <=> LRCK
DATA_C_M <=> SRDATA
IC401
YESAM176
IC402
YESAM172
FLASH
IC409
YESAM167
IC411
YESAM178
IC406
YESAM171
X401
YESXL018
TP415
3.3V(RAM)
TP402
TP403
TP404
TP405
TP406
TP407
TP408
TP409
TP410
GND
VDD3.3V

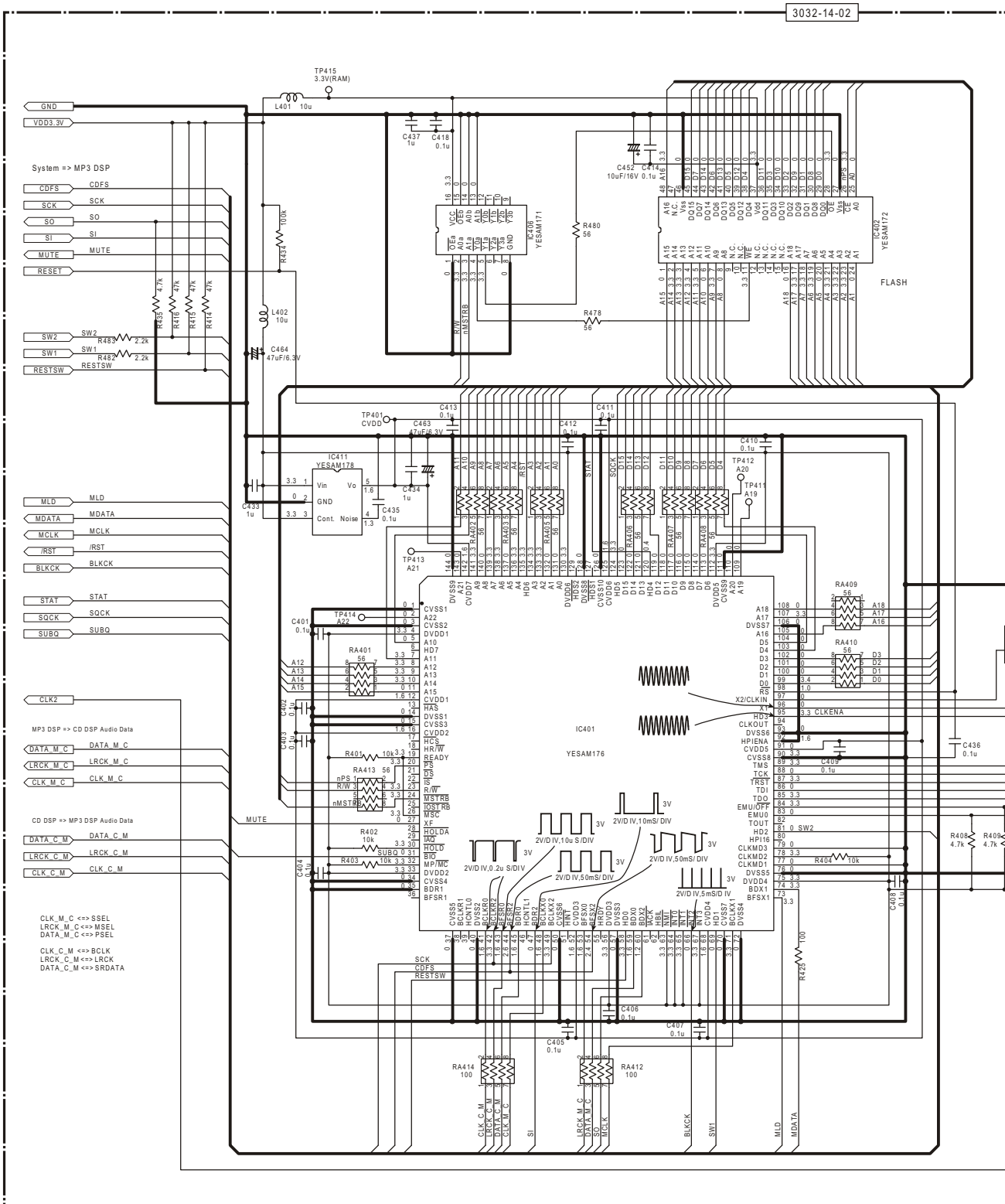
3032-14-02
GND
VDD3.3V
System => MP3 DSP
CDFS
SCK
SO
SI
MUTE
RESET
SW2
SW1
RESTSW
MLD
MDATA
MCLK
/RST
BLKCK
STAT
SQCK
SUBQ
CLK2
MP3 DSP => CD DSP Audio Data
DATA_M_C
LRCK_M_C
CLK_M_C
CD DSP => MP3 DSP Audio Data
DATA_C_M
LRCK_C_M
CLK_C_M
CLK_M_C <=> SSEL
LRCK_M_C <=> MSEL
DATA_M_C <=> PSEL
CLK_C_M <=> BCLK
LRCK_C_M <=> LRCK
DATA_C_M <=> SRDATA
TP415
3.3V(RAM)
L401 10u
L402 10u
C464
47uF/6.3V
IC406
YESAM171
IC402
YESAM172
FLASH
IC411
YESAM178
IC401
YESAM176
TP401
CVDD
TP412
A20
TP411
A19
TP413
A21
TP414
A22
CLKENA
SW2
SCK
CDFS
RESTSW
MUTE
2V/D IV,0.2u S/DIV
2V/D IV,10u S/DIV
2V/D IV,50mS/ DIV
2V/D IV,10mS/ DIV
2V/D IV,5mS/D IV

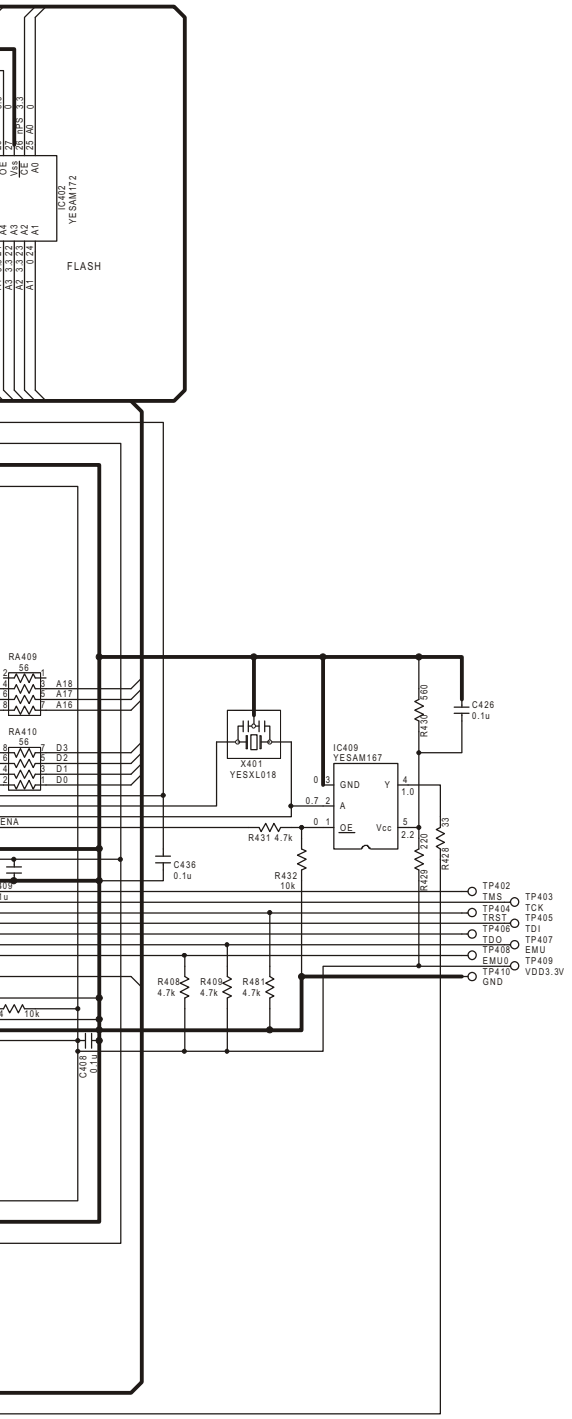
IC402
YESAM172
FLASH
RA409
56
A18
A17
A18
RA410
56
D3
D2
D1
D0
X401
YESXL018
IC409
YESAM167
GND
Y
A
OE
Vcc
R430 560
C426
0.1u
R431 4.7k
R432
10k
C436
0.1u
R429
220
R428
33
TP402
TMS
TP404
TRST
TP406
TDO
TP408
EMU0
TP410
GND
TP403
TCK
TP405
TDI
TP407
EMU
TP409
VDD3.3V
R408
4.7k
R409
4.7k
R481
4.7k
C408
0.1u

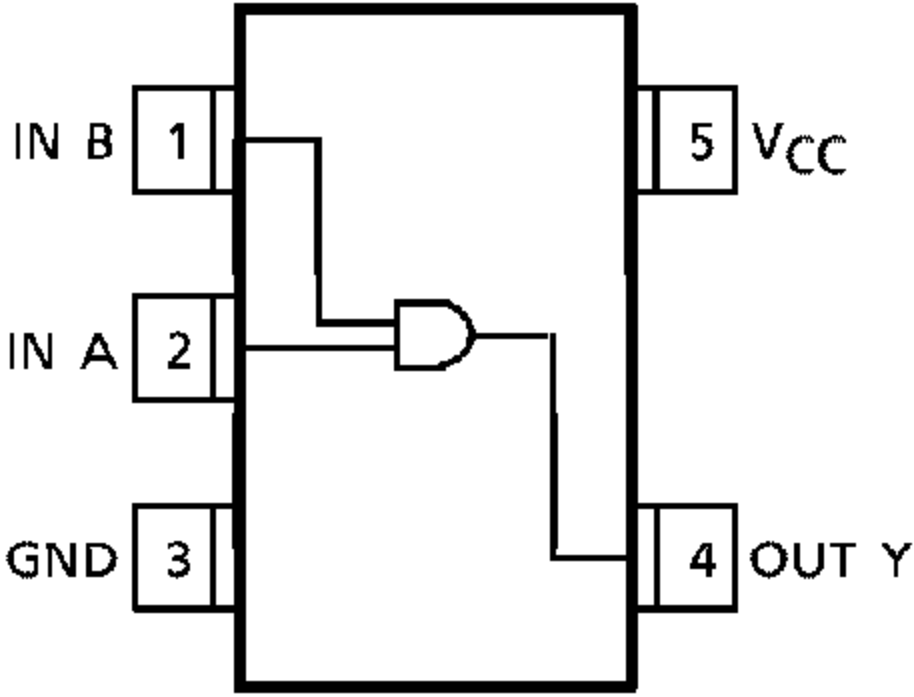
IN B
1
IN A
2
GND
3
5
V_{CC}
4
OUT Y

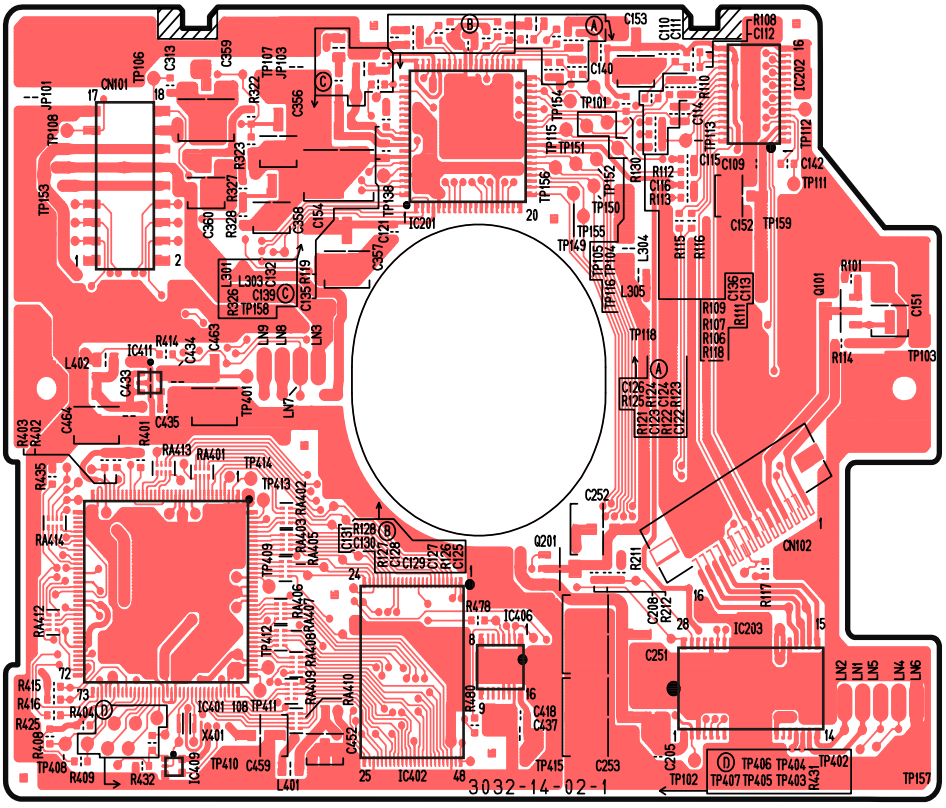

[3032-12-02] [TOP VIEW]

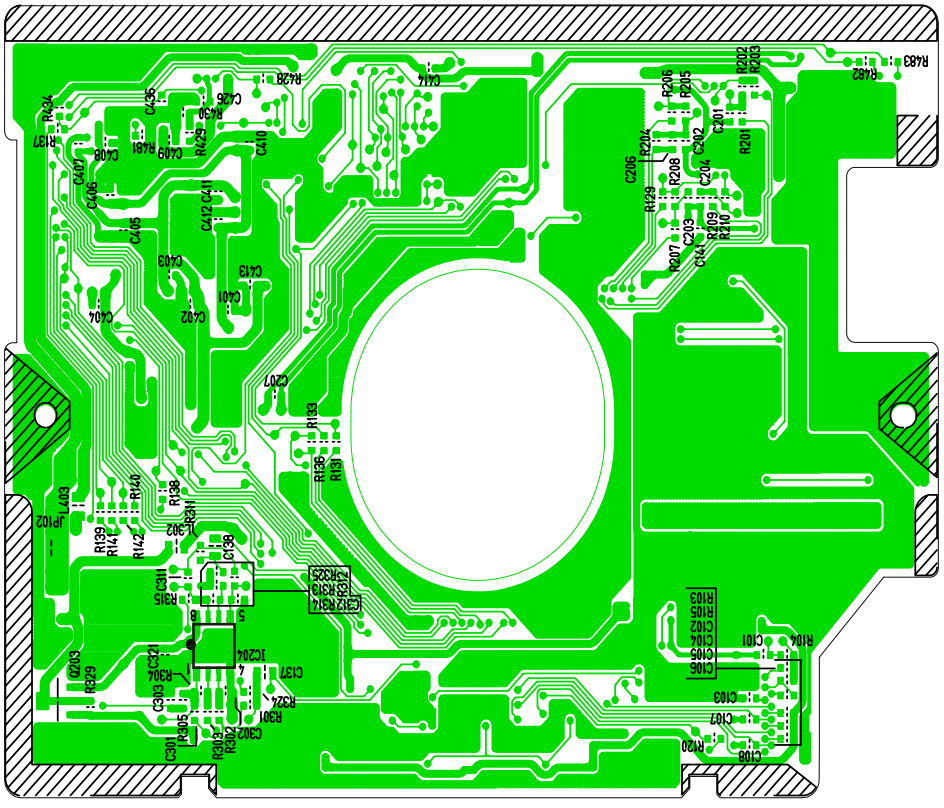

[3032-12-02] [BOTTOM VIEW]

CQ-DP383(U.W.WJ) CD SERVO PCB

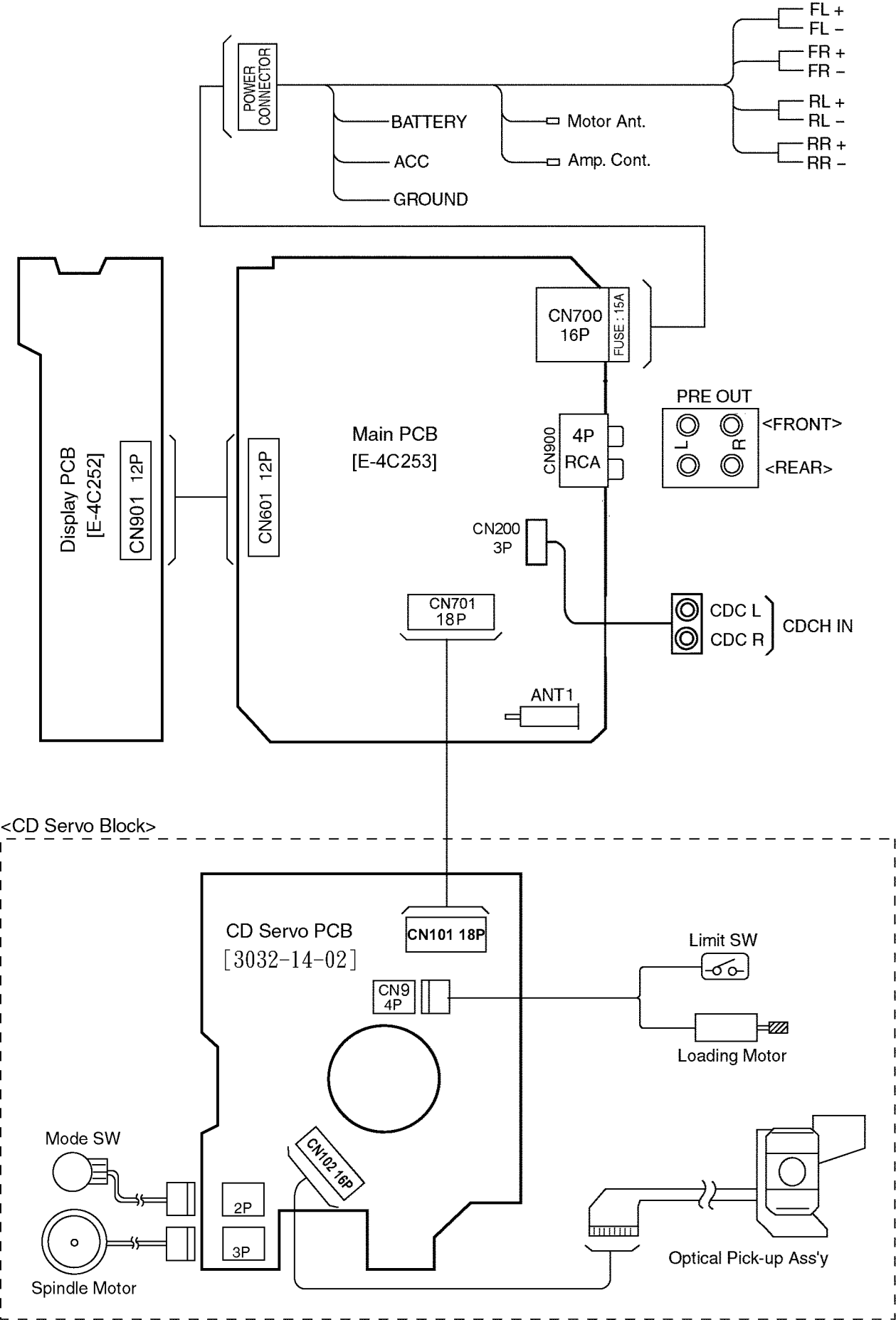
POWER CONNECTOR
BATTERY
ACC
GROUND
Motor Ant.
Amp. Cont.
FL +
FL –
FR +
FR –
RL +
RL –
RR +
RR –
Display PCB
[E-4C252]
CN901 12P
CN601 12P
Main PCB
[E-4C253]
CN700
16P
FUSE : 15A
CN900
4P
RCA
PRE OUT
L
R
<FRONT>
<REAR>
CN200
3P
CN701
18P
CDC L
CDC R
CDCH IN
ANT1
<CD Servo Block>
CD Servo PCB
[3032-14-02]
CN101 18P
CN9
4P
Limit SW
Loading Motor
Mode SW
CN102 16P
2P
3P
Spindle Motor
Optical Pick-up Ass'y

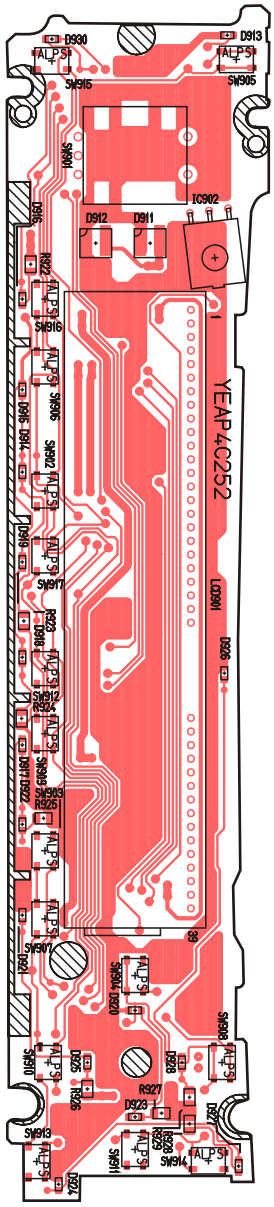

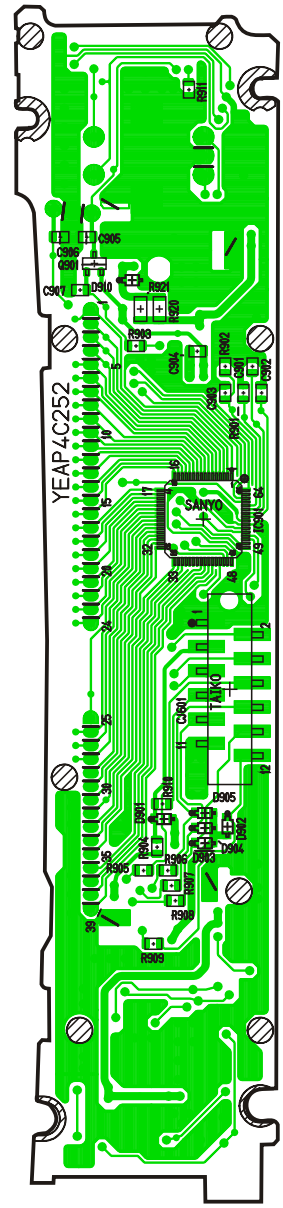

[E-4C252] [TOP VIEW]

[E-4C252] [BOTTOM VIEW]

CQ-DP383 (U.W.WJ) Display PCB

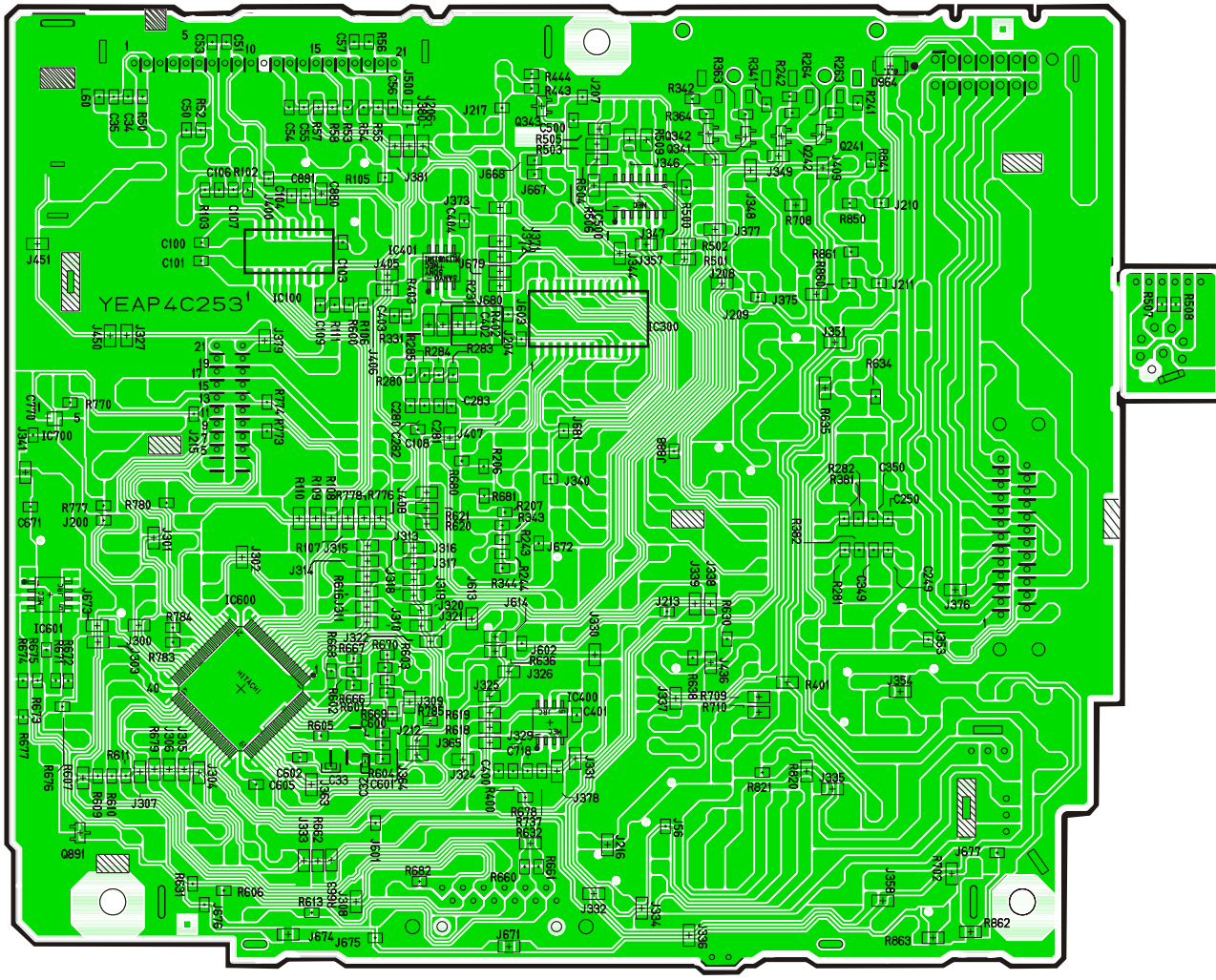

[E-4C253] [BOTTOM VIEW]

CQ-DP383 (U.W.WJ) Main PCB

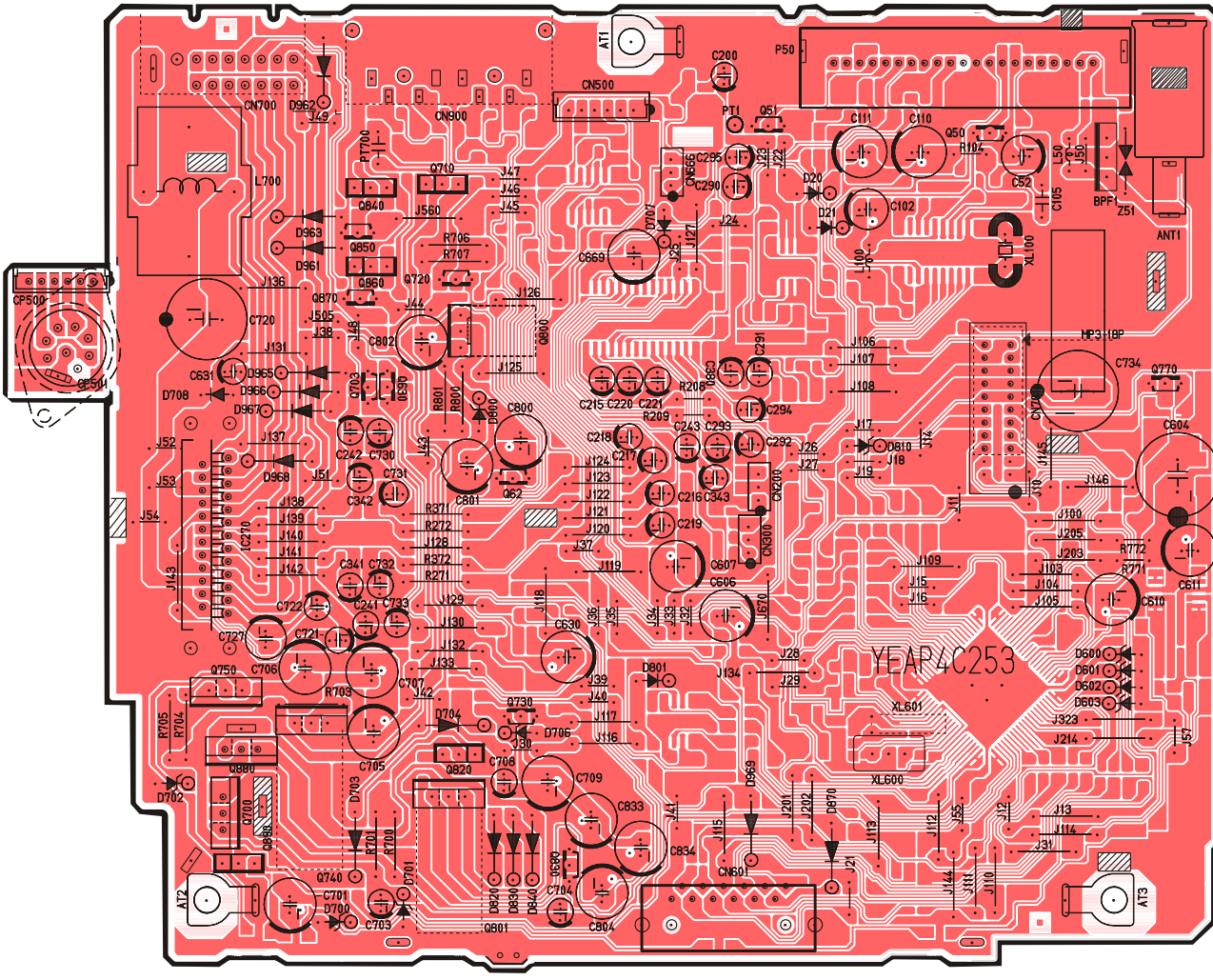

[E-4C253] [TOP VIEW]

CQ-DP383(U.W.WJ) Main PCB