45Wx4
BAND
APM
POWER
SRC
VOLUME/PUSH SEL
Panasonic CQ-DP103U
LOUD
D-M
ST
MONO
TPS
MTL
DISC
B-SKIP
TRACK
LOCAL
D M
TUNE
TRACK
REP
RANDOM
CLOCK
DISP
7
8
9
10
11
12
SCAN
MUTE
1
2
3
4
5
6
LOUD

178mm
150mm
50mm
45Wx4
VOLUME/PUSH SEL
Panasonic CQ-DP103U
BAND
APM
POWER
SRC
LOUD
MONO
TRACK
LOCAL
D M
TUNE
TRACK
REP
RANDOM
CLOCK
DISP
SCAN
MUTE
1
2
3
4
5
6
7
8
9
10
11
12
LOUD

Supplement

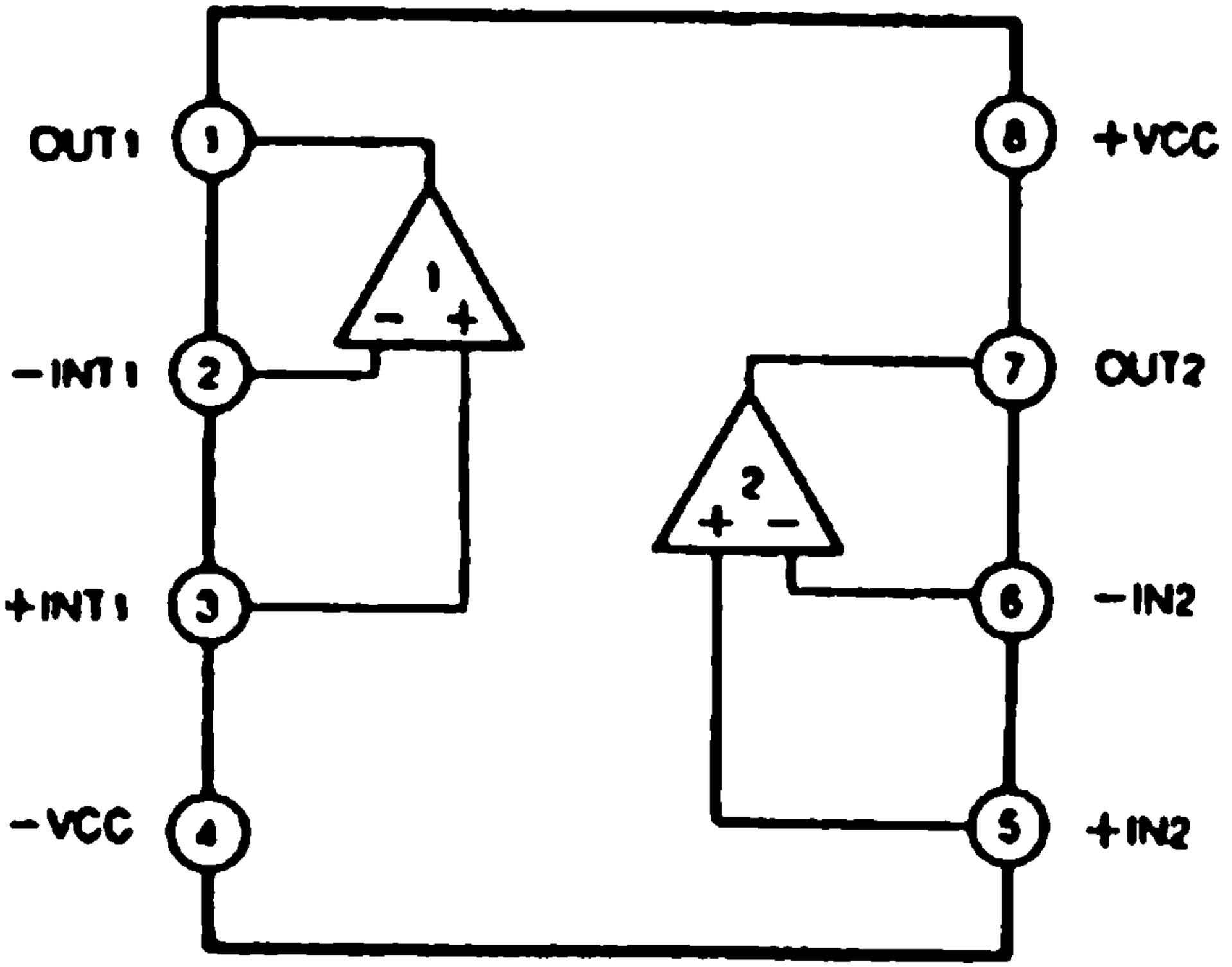
OUT1
1
-INT1
2
+INT1
3
-VCC
4
+VCC
8
OUT2
7
-IN2
6
+IN2
5
1
2

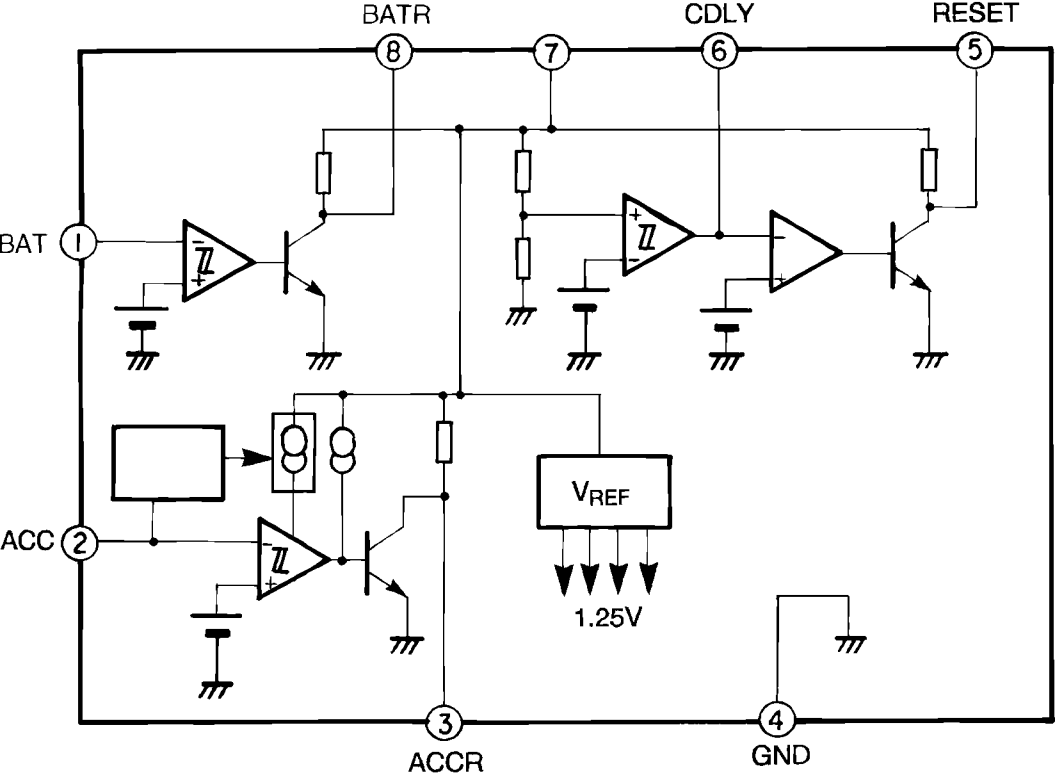
BATR
CDLY
RESET
8
7
6
5
BAT
1
ACC
2
VREF
1.25V
3
4
ACCR
GND

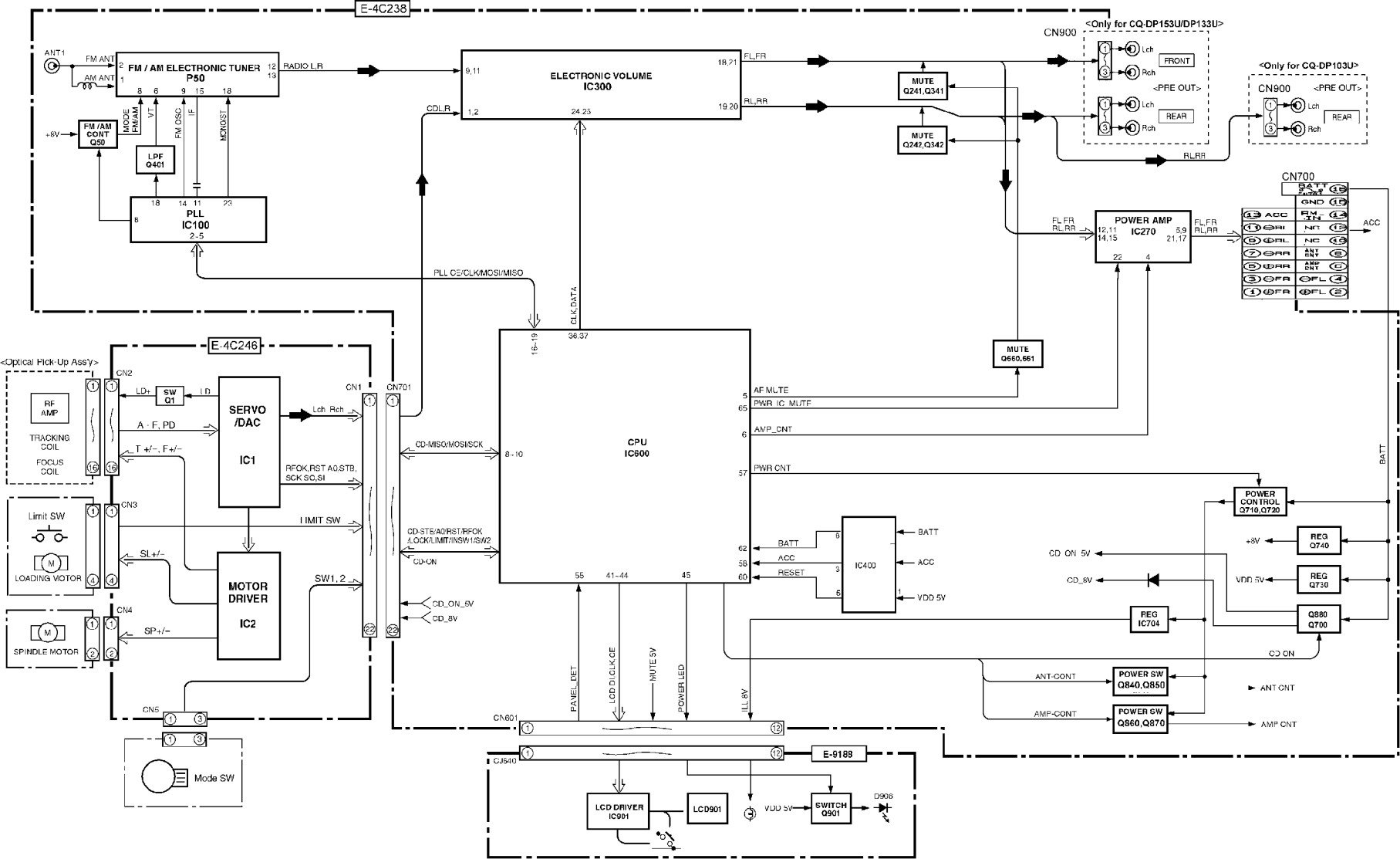
E-4C238
ANT1
FM ANT
AM ANT
FM / AM ELECTRONIC TUNER
P50
RADIO L,R
MODE FM/AM
VT
FM OSC
IF
MONOST
+8V
FM /AM CONT Q50
LPF Q401
PLL IC100
ELECTRONIC VOLUME IC300
CDL,R
FL,FR
RL,RR
MUTE Q241,Q341
MUTE Q242,Q342
CN900
<Only for CQ-DP153U/DP133U>
Lch
Rch
FRONT
<PRE OUT>
REAR
<Only for CQ-DP103U>
CN700
BATT
GND
ACC
NC
ANT CNT
AMP CNT
POWER AMP IC270
PLL CE/CLK/MOSI/MISO
CLK,DATA
E-4C246
<Optical Pick-Up Assy>
RF AMP
TRACKING COIL
FOCUS COIL
CN2
LD+
LD-
SW Q1
SERVO /DAC IC1
A - F, PD
T +/-, F+/-
Lch Rch
RFOK,RST A0,STB, SCK SO,SI
CN1
CN701
CD-MISO/MOSI/SCK
CPU IC600
AF MUTE
PWR IC MUTE
AMP_CNT
PWR CNT
MUTE Q660,661
CN3
Limit SW
LIMIT SW
LOADING MOTOR
SL+/-
MOTOR DRIVER IC2
SW1, 2
CD-STB/A0/RST/RFOK /LOCK/LIMIT/INSW1/SW2
CD-ON
CD_ON_5V
CD_8V
CN4
SPINDLE MOTOR
SP+/-
CN5
Mode SW
IC400
BATT
ACC
RESET
VDD 5V
POWER CONTROL Q710,Q720
REG Q740
REG Q730
REG IC704
Q880 Q700
CD ON
ANT-CONT
POWER SW Q840,Q850
AMP-CONT
POWER SW Q860,Q870
ANT CNT
AMP CNT
PANEL_DET
LCD DI,CLK,CE
MUTE 5V
POWER LED
ILL 8V
CN601
CJ640
E-9189
LCD DRIVER IC901
LCD901
VDD 5V
SWITCH Q901
D906

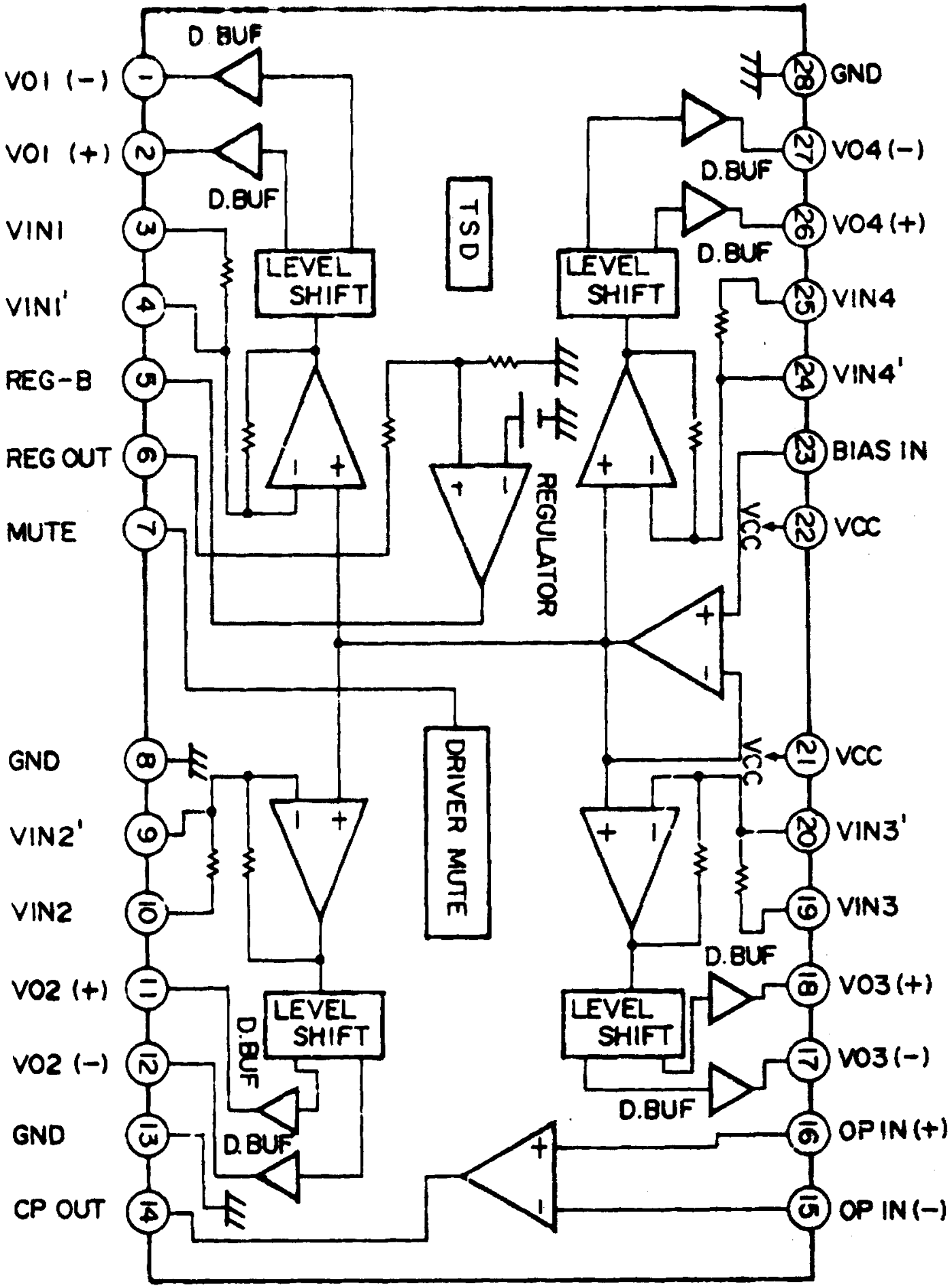
VO1 (−)
VO1 (+)
VIN1
VIN1'
REG-B
REG OUT
MUTE
GND
VIN2'
VIN2
VO2 (+)
VO2 (−)
GND
CP OUT
GND
VO4 (−)
VO4 (+)
VIN4
VIN4'
BIAS IN
VCC
VCC
VIN3'
VIN3
VO3 (+)
VO3 (−)
OP IN (+)
OP IN (−)
D. BUF
D.BUF
LEVEL SHIFT
TSD
REGULATOR
DRIVER MUTE

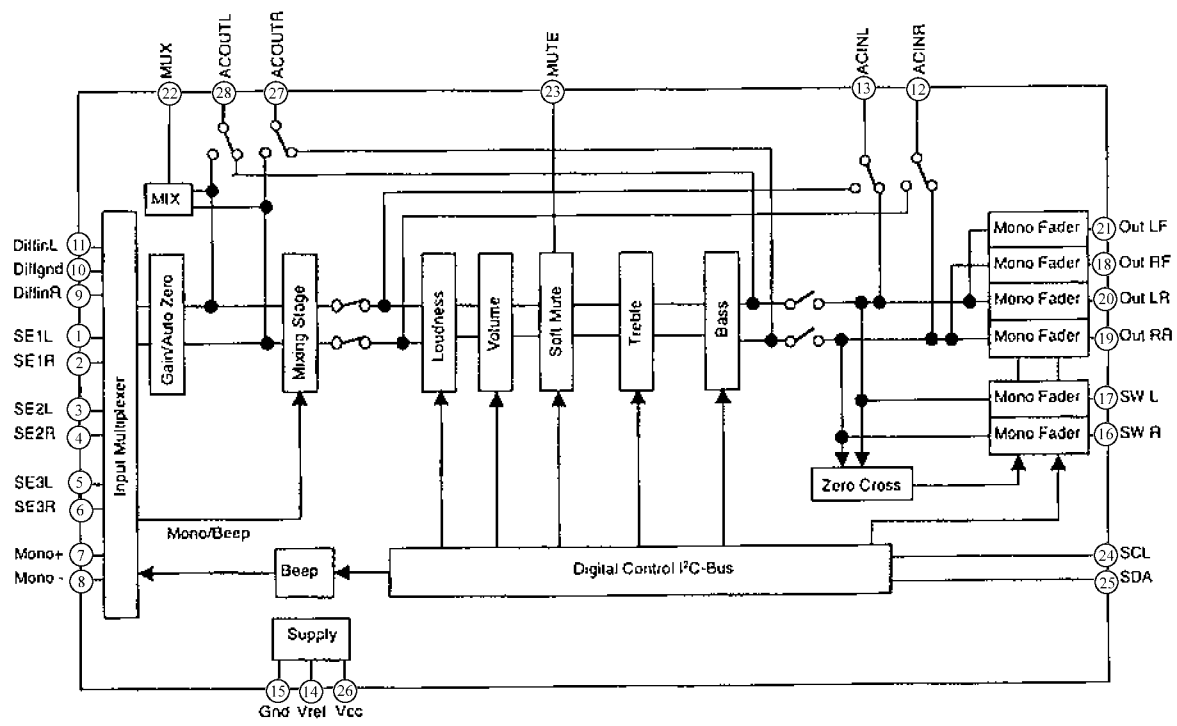
MUX
ACOUTL
ACOUTR
MUTE
ACINL
ACINR
22
28
27
23
13
12
MIX
DiffinL 11
Diffgnd 10
DiffinR 9
SE1L 1
SE1R 2
SE2L 3
SE2R 4
SE3L 5
SE3R 6
Mono+ 7
Mono - 8
Input Multiplexer
Gain/Auto Zero
Mixing Stage
Loudness
Volume
Soft Mute
Treble
Bass
Mono Fader
Mono Fader
Mono Fader
Mono Fader
Mono Fader
Mono Fader
21 Out LF
18 Out RF
20 Out LR
19 Out RR
17 SW L
16 SW R
Zero Cross
Mono/Beep
Beep
Digital Control I²C-Bus
24 SCL
25 SDA
Supply
15 Gnd
14 Vref
26 Vcc

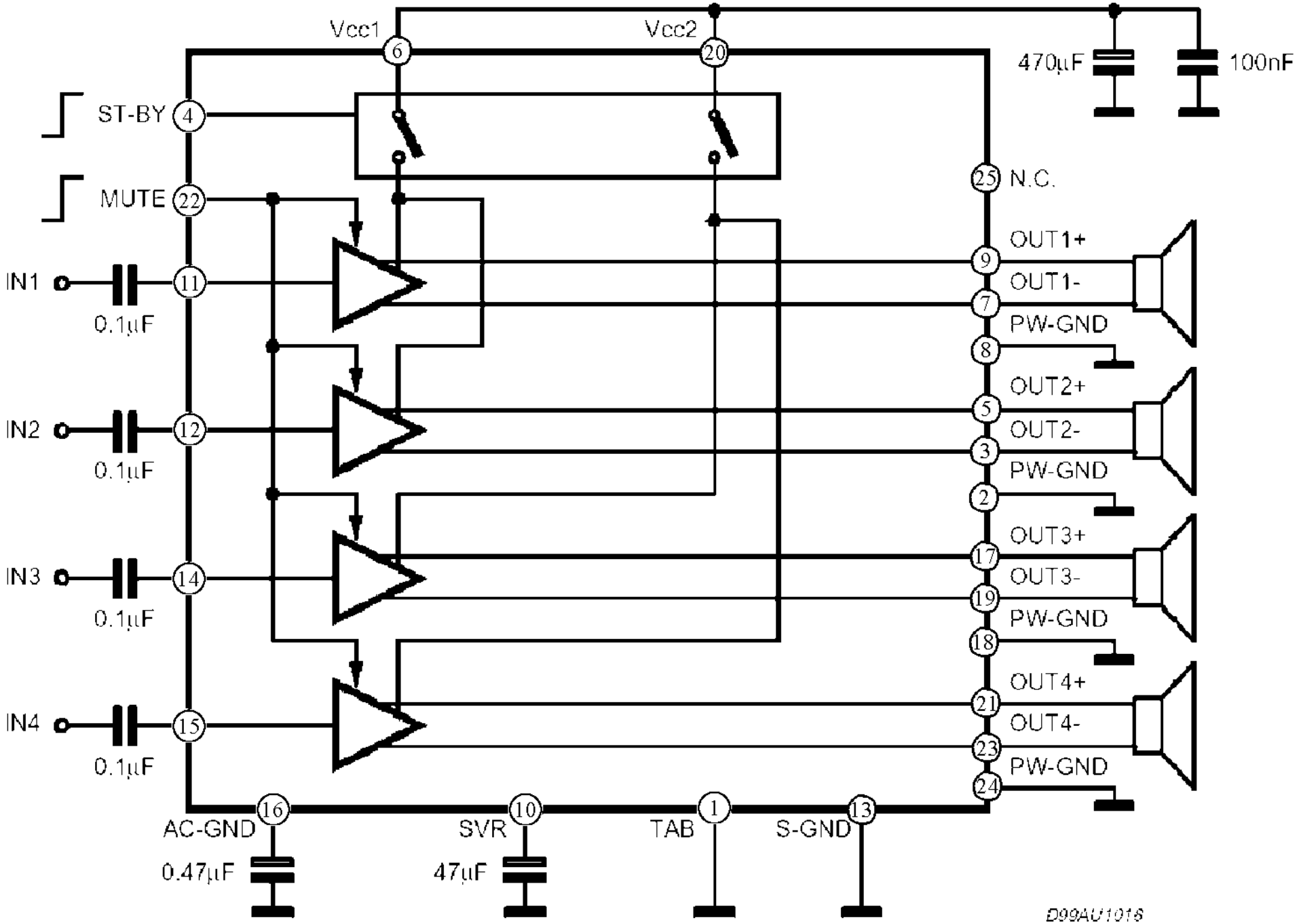
Vcc1
6
Vcc2
20
470µF
100nF
ST-BY
4
MUTE
22
25
N.C.
IN1
11
0.1µF
OUT1+
9
OUT1-
7
PW-GND
8
IN2
12
0.1µF
OUT2+
5
OUT2-
3
PW-GND
2
IN3
14
0.1µF
OUT3+
17
OUT3-
19
PW-GND
18
IN4
15
0.1µF
OUT4+
21
OUT4-
23
PW-GND
24
16
AC-GND
0.47µF
10
SVR
47µF
1
TAB
13
S-GND
D99AU1016

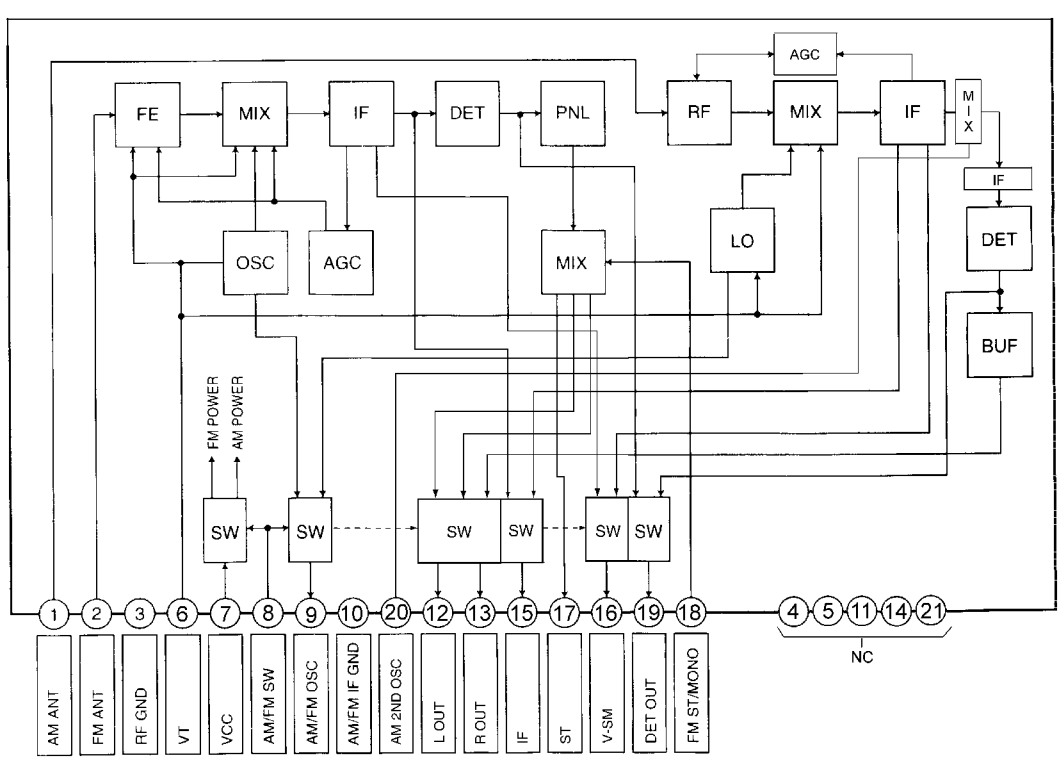
AGC
FE
MIX
IF
DET
PNL
RF
MIX
IF
MIX
IF
DET
BUF
LO
OSC
AGC
MIX
FM POWER
AM POWER
SW
SW
SW
SW
SW
SW
1
2
3
6
7
8
9
10
20
12
13
15
17
16
19
18
4
5
11
14
21
NC
AM ANT
FM ANT
RF GND
VT
VCC
AM/FM SW
AM/FM OSC
AM/FM IF GND
AM 2ND OSC
L OUT
R OUT
IF
ST
V-SM
DET OUT
FM ST/MONO

MODEL TN-2001

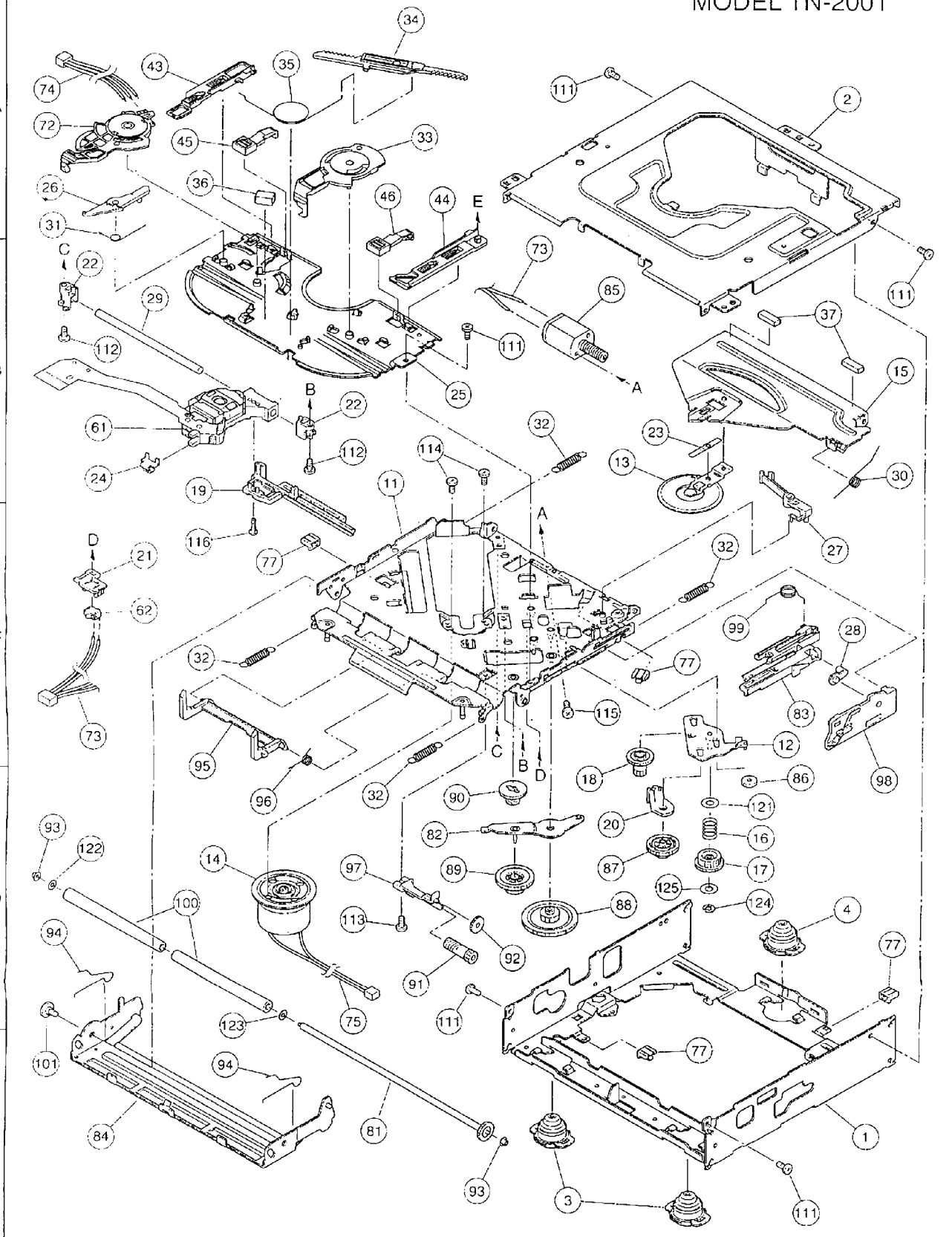

FD15263

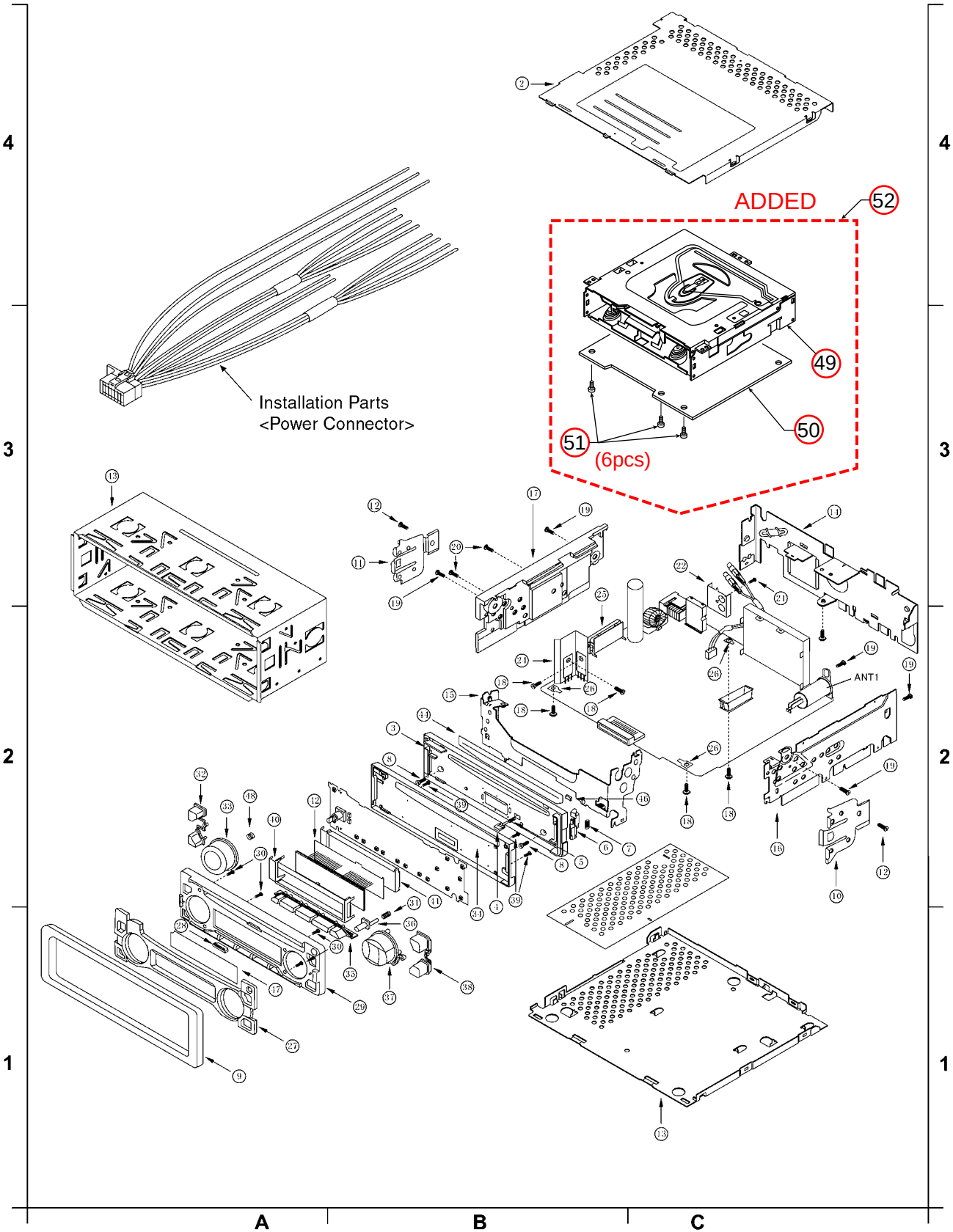
ADDED
52
49
50
51
(6pcs)
Installation Parts
<Power Connector>
ANT1
A
B
C
1
2
3
4

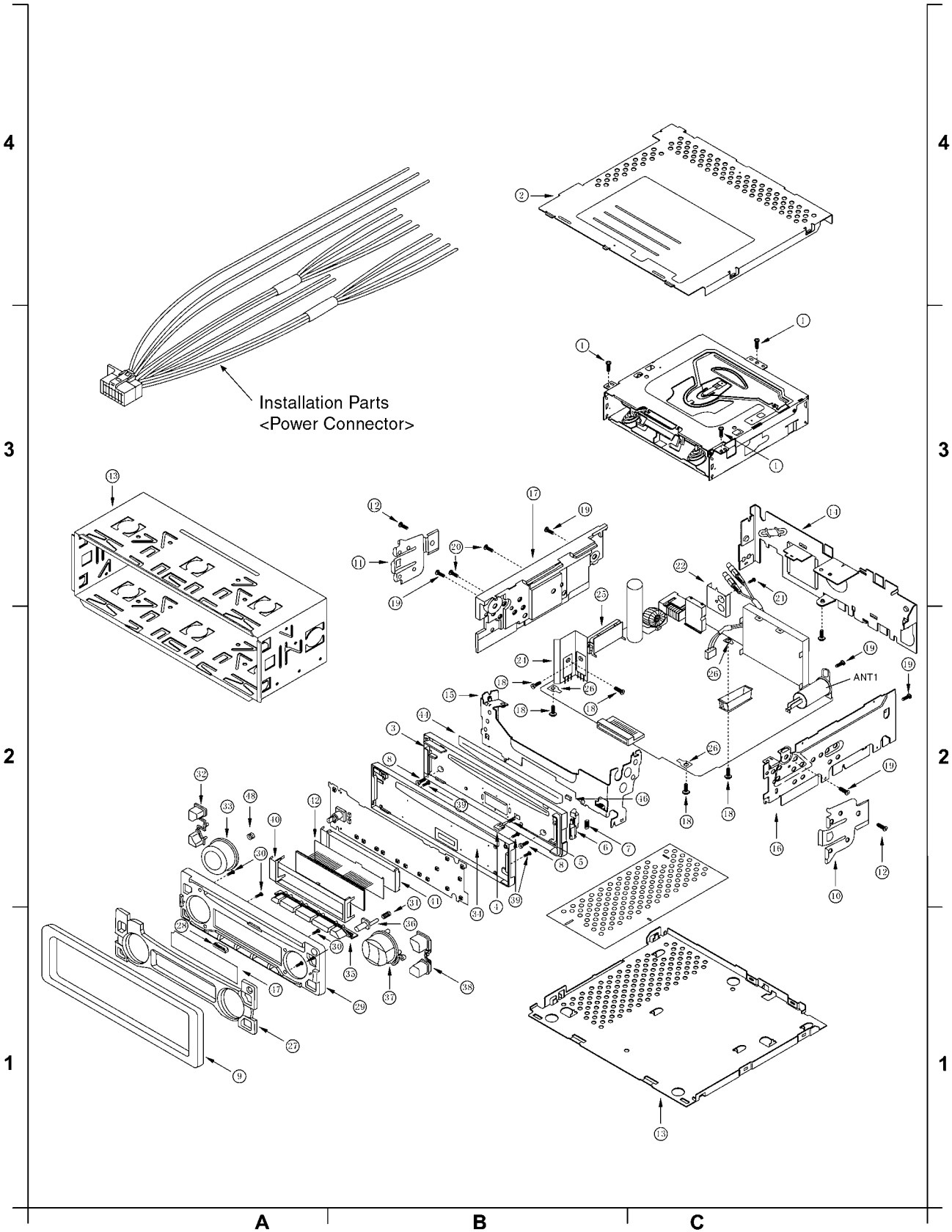
Installation Parts
<Power Connector>
ANT1
A
B
C
1
2
3
4

CAUTION:

This product utilizes a laser diode with the unit turned "on", laser radiation is emitted from the pickup lens.

Laser radiation from the pickup lens is safety level, but be sure the followings:

1. Do not disassemble the optical pickup unit, since radiation from exposed laser diode is dangerous.
2. Do not adjust the variable resistor on the pickup unit. It was already adjusted.
3. Do not look at the focus lens using optical instruments.
4. Recommend not to look at pickup lens for a long time.

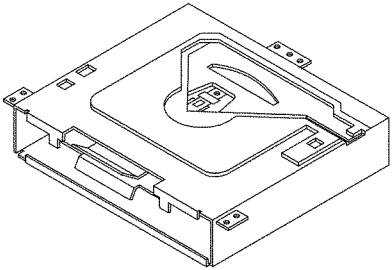

Deck Ass'y (Upper Side)

Caution

This Product utilizes a laser.

Use of controls or adjustments or performance of procedures other than those specified herein may result in hazardous radiation exposure.

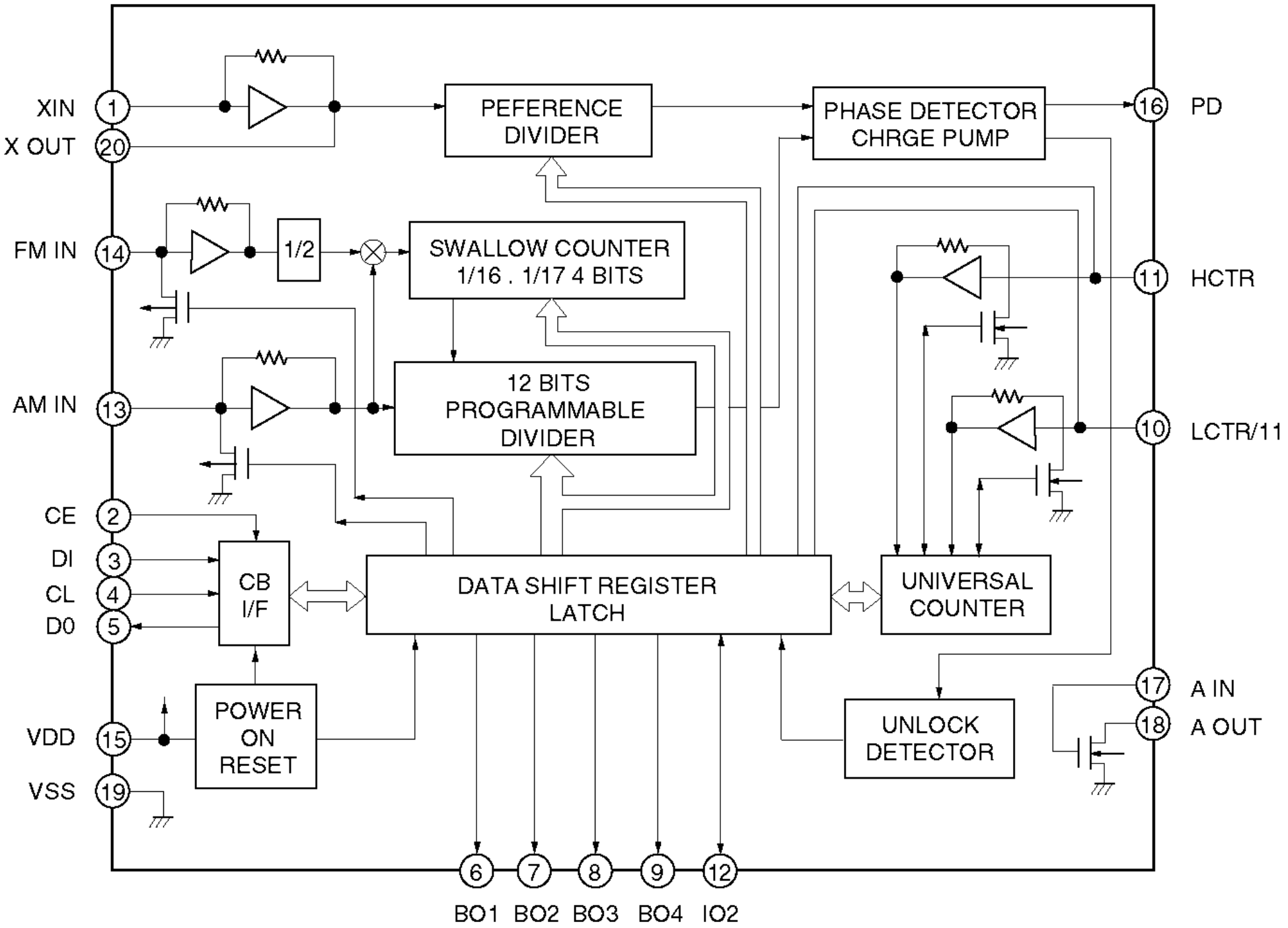
XIN
X OUT
FM IN
AM IN
CE
DI
CL
D0
VDD
VSS
PEFERENCE DIVIDER
PHASE DETECTOR CHRGE PUMP
PD
1/2
SWALLOW COUNTER 1/16 . 1/17 4 BITS
12 BITS PROGRAMMABLE DIVIDER
HCTR
LCTR/11
CB I/F
DATA SHIFT REGISTER LATCH
UNIVERSAL COUNTER
POWER ON RESET
UNLOCK DETECTOR
A IN
A OUT
BO1
BO2
BO3
BO4
IO2

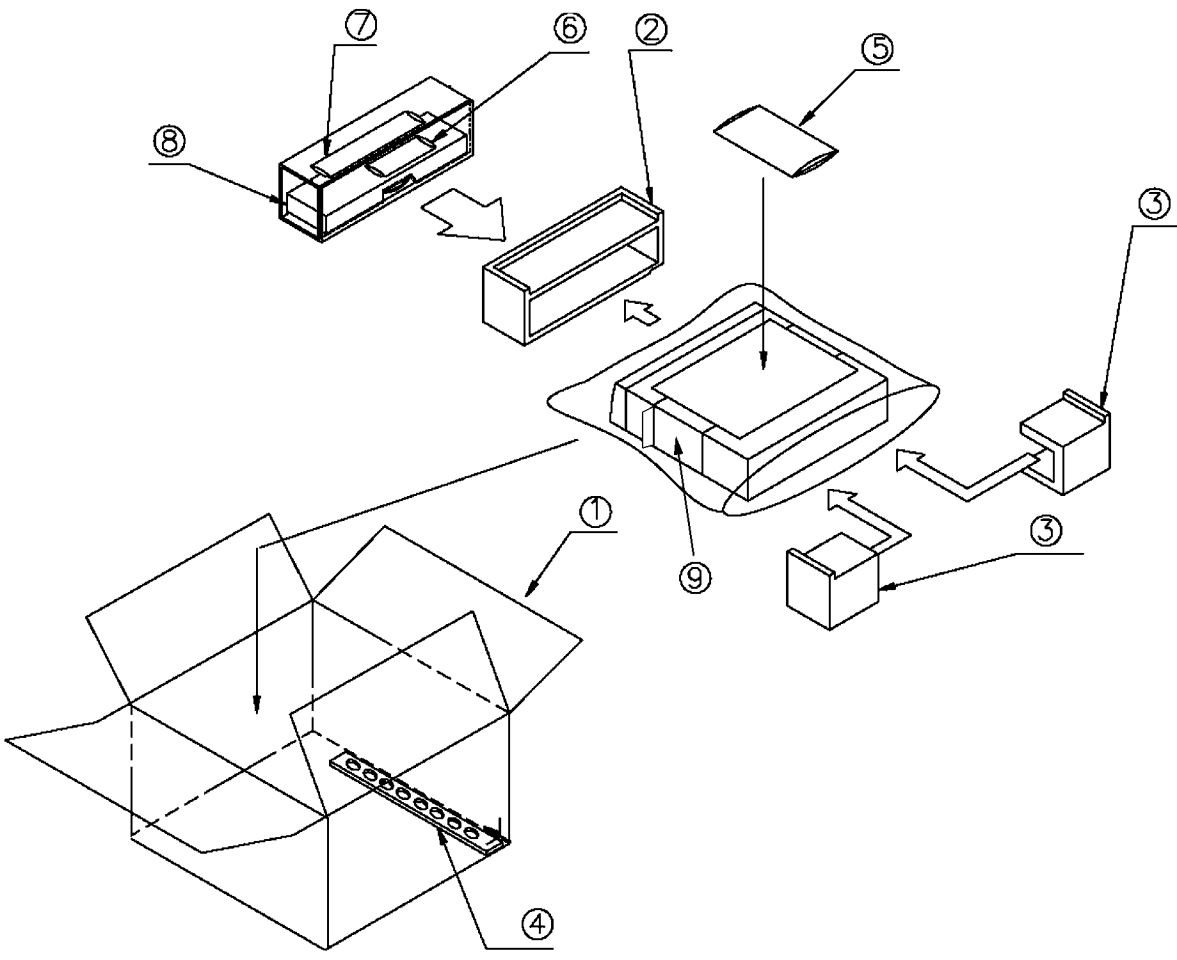
⑦
⑥
②
⑤
⑧
③
①
③
⑨
④

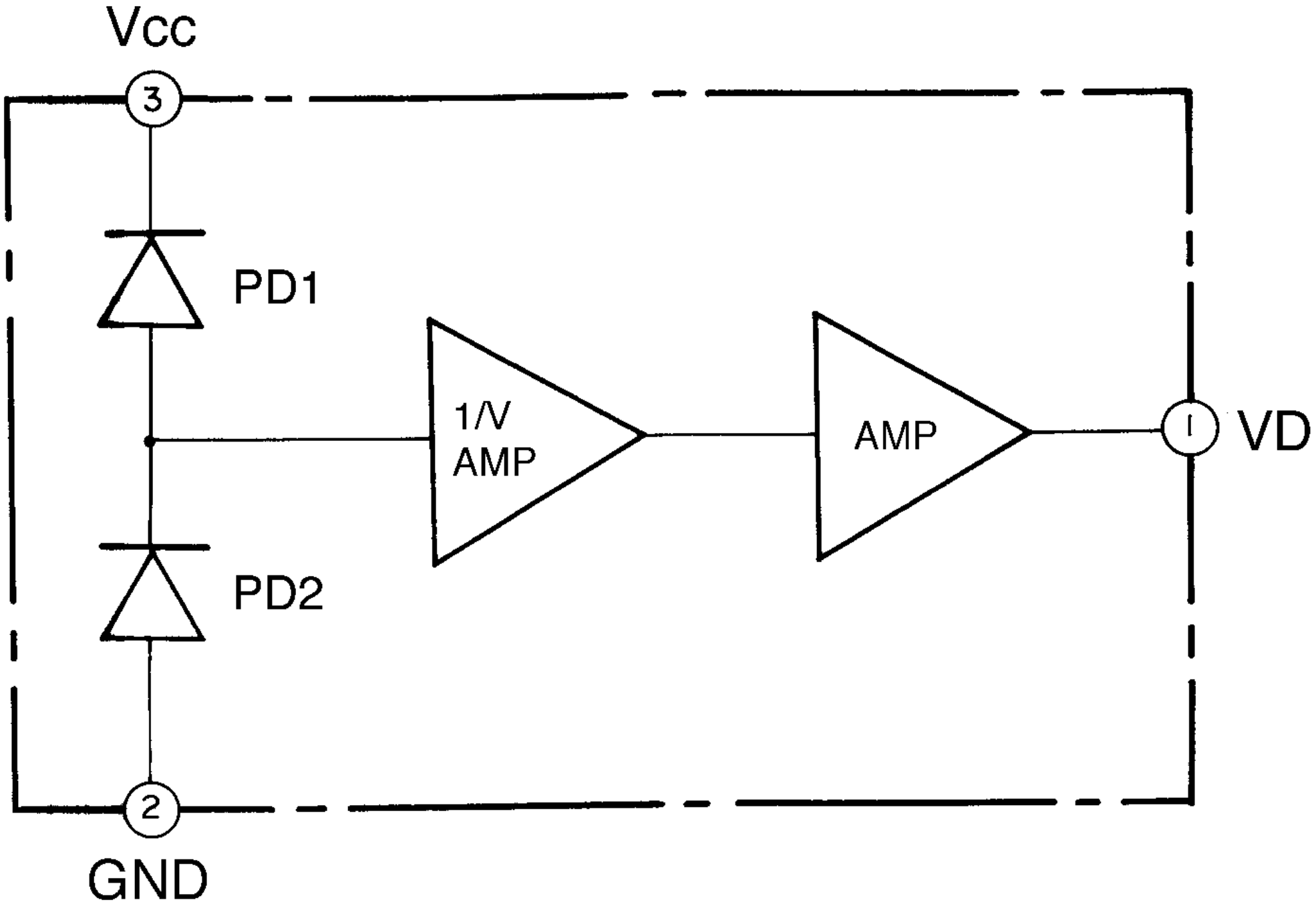
Vcc
3
PD1
1/V
AMP
AMP
1
VD
PD2
2
GND

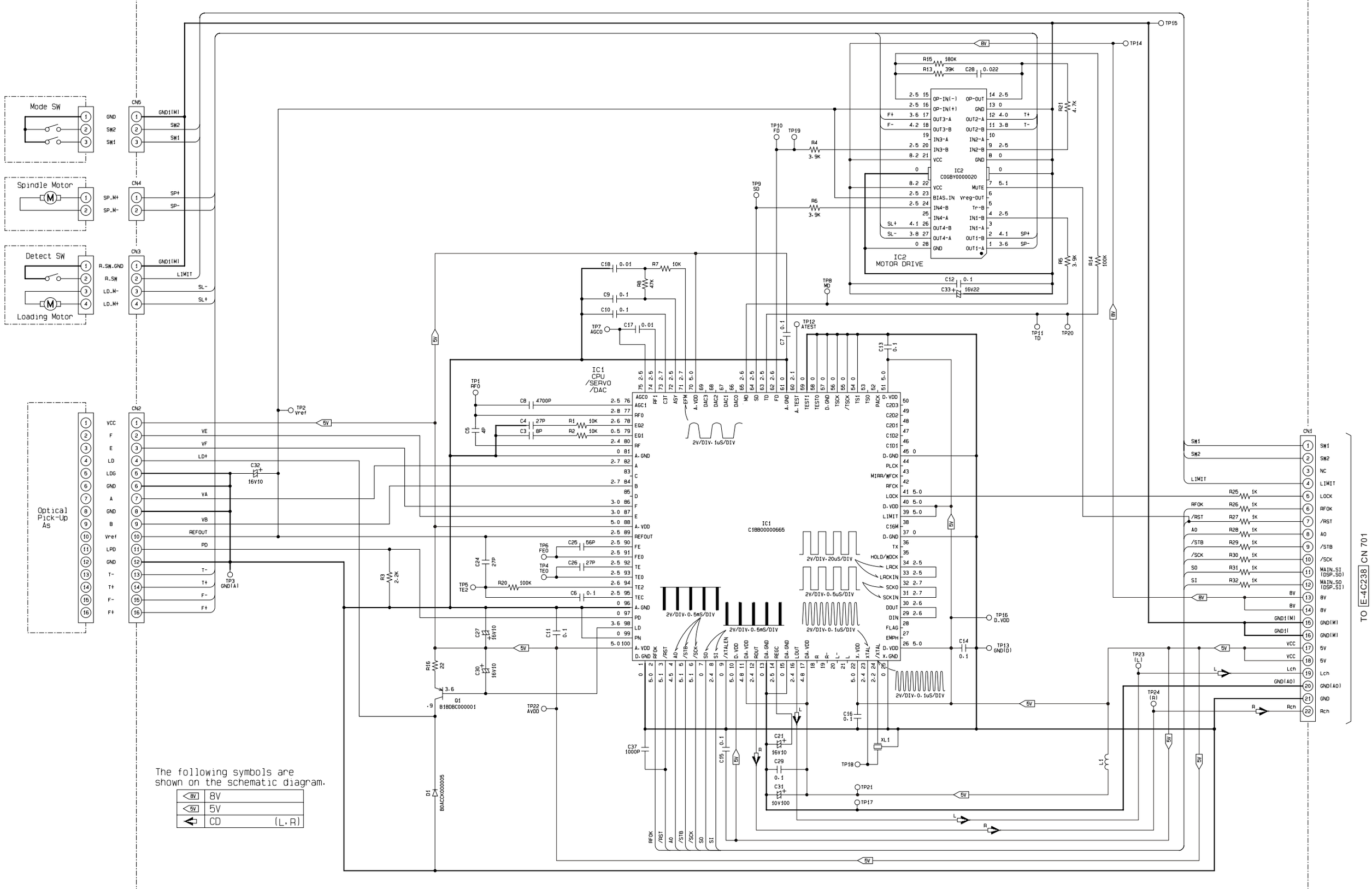
Mode SW
Spindle Motor
Detect SW
Loading Motor
Optical Pick-Up As
CN5
CN4
CN3
CN2
CN1
TO E-4C238 CN 701
IC1
CPU /SERVO /DAC
C1B0B00000665
IC2
MOTOR DRIVE
IC2
C0GBY0000020
Q1
B1BDBC000001
D1
B0ACCK000005
XL1
L1
The following symbols are shown on the schematic diagram.
8V
5V
CD (L, R)

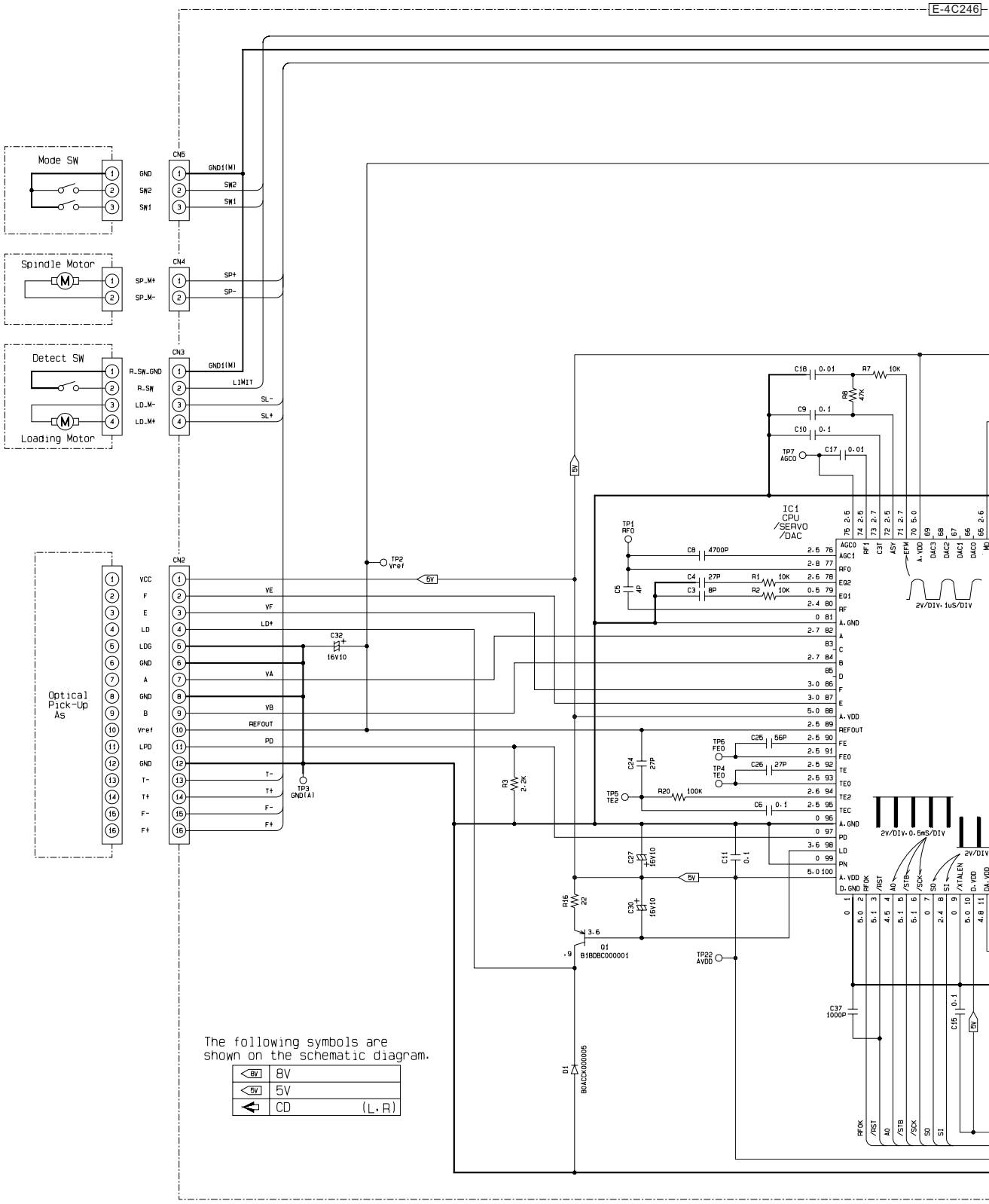
Mode SW
GND
SW2
SW1
CN5
GND1(M)
SW2
SW1
Spindle Motor
SP_M+
SP_M-
CN4
SP+
SP-
Detect SW
R_SW_GND
R_SW
LD_M-
LD_M+
Loading Motor
CN3
GND1(M)
LIMIT
SL-
SL+
Optical Pick-Up As
VCC
F
E
LD
LDG
GND
A
GND
B
Vref
LPD
GND
T-
T+
F-
F+
CN2
VE
VF
LD+
VA
VB
REFOUT
PD
T-
T+
F-
F+
TP2 Vref
TP3 GND(A)
C32 16V10
5V
IC1 CPU /SERVO /DAC
AGC0
AGC1
RF0
EQ2
EQ1
RF
A.GND
A
C
B
D
F
E
A.VDD
REFOUT
FE
FEO
TE
TEO
TE2
TEC
A.GND
PD
LD
PN
A.VDD
D.GND
RFOK
/RST
AO
/STB
/SCK
SO
SI
/XTALEN
D.VDD
DA.VDD
AGC0
RF1
C3T
ASY
EFM
A.VDD
DAC3
DAC2
DAC1
DAC0
MD
C18 0.01
R7 10K
R8 47K
C9 0.1
C10 0.1
TP7 AGCO
C17 0.01
TP1 RF0
C8 4700P
C5 4P
C4 27P
R1 10K
C3 8P
R2 10K
2V/DIV. 1uS/DIV
C24 27P
TP6 FEO
C25 56P
TP4 TEO
C26 27P
TP5 TE2
R20 100K
C6 0.1
R3 2.2K
C27 16V10
C11 0.1
R16 22
C30 16V10
Q1 B1BDBC000001
TP22 AVDD
2V/DIV. 0.5mS/DIV
2V/DIV
C37 1000P
C15 0.1
D1 B0ACDC000005
The following symbols are shown on the schematic diagram.
8V
5V
CD (L.R)

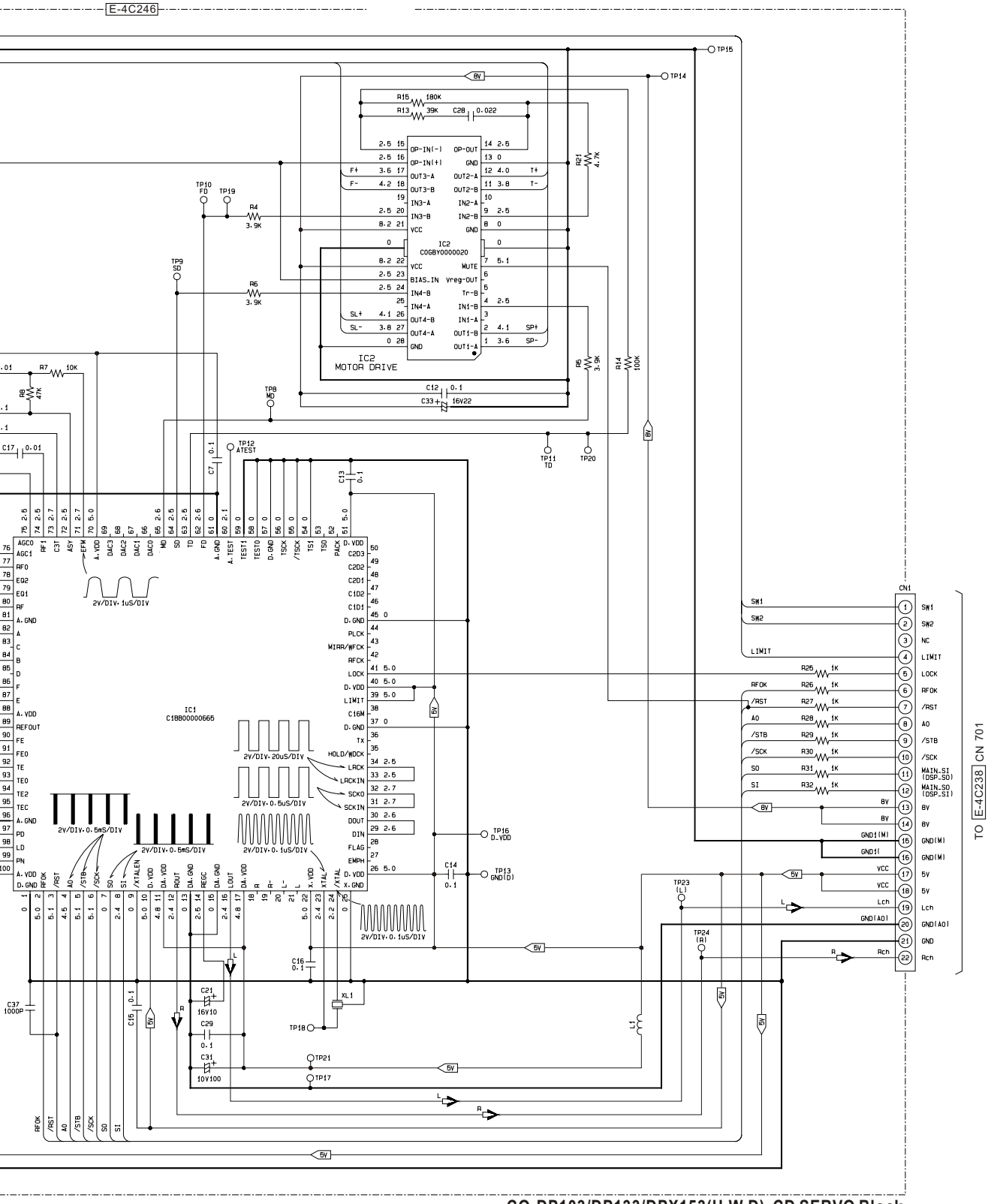
IC2
MOTOR DRIVE
IC2
C0GBY0000020
IC1
C1BB00000665
CN1
TO E-4C238 CN 701
2V/DIV·1uS/DIV
2V/DIV·20uS/DIV
2V/DIV·0.5uS/DIV
2V/DIV·0.6mS/DIV
2V/DIV·0.1uS/DIV

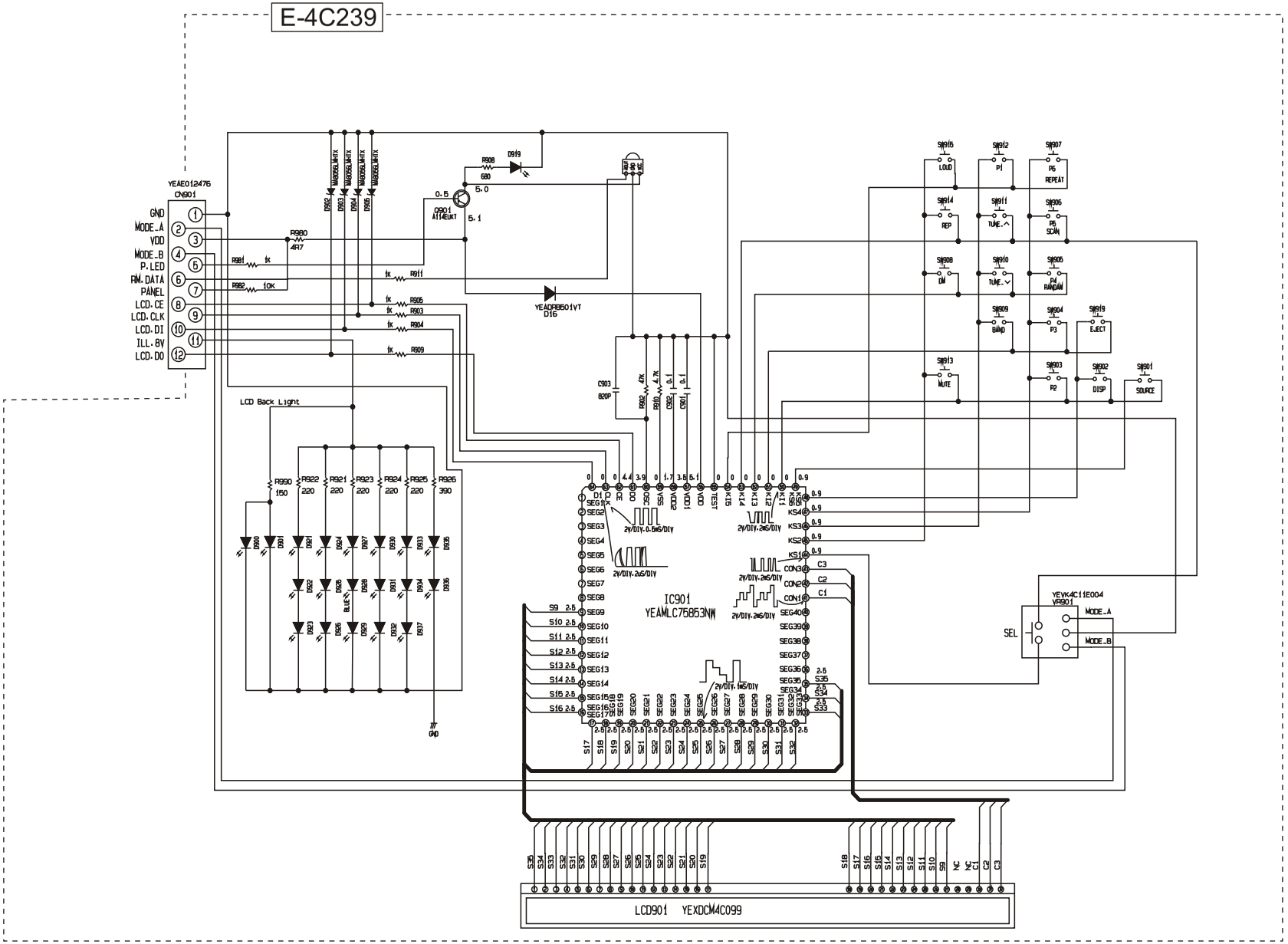

CQ-DP103/DP133/DPX153(U.W.D) Disp Block

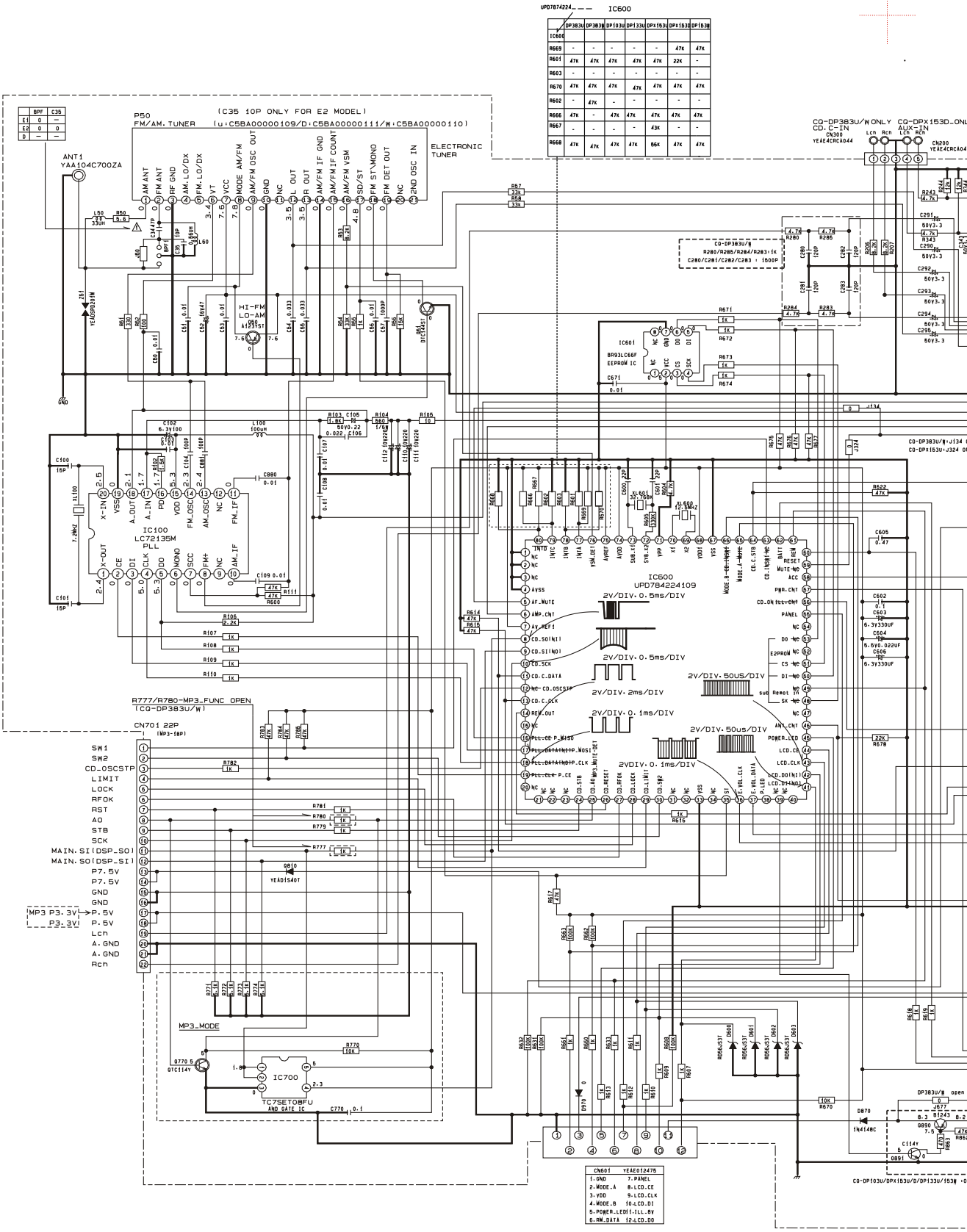

	DP383U	DP383W	DP103U	DP133U	DPX153U	DPX153D	DPX153W
IC600							
R669	-	-	-	-	-	47K	47K
R601	47K	47K	47K	47K	47K	22K	-
R603	-	-	-	-	-	-	-
R670	47K	47K	47K	47K	47K	47K	47K
R602	-	47K	-	-	-	-	-
R666	47K	-	47K	47K	47K	47K	47K
R667	-	-	-	-	43K	-	-
R668	47K	47K	47K	47K	56K	47K	47K

	BPF	C35
E1	0	—
E2	0	0
D	—	—

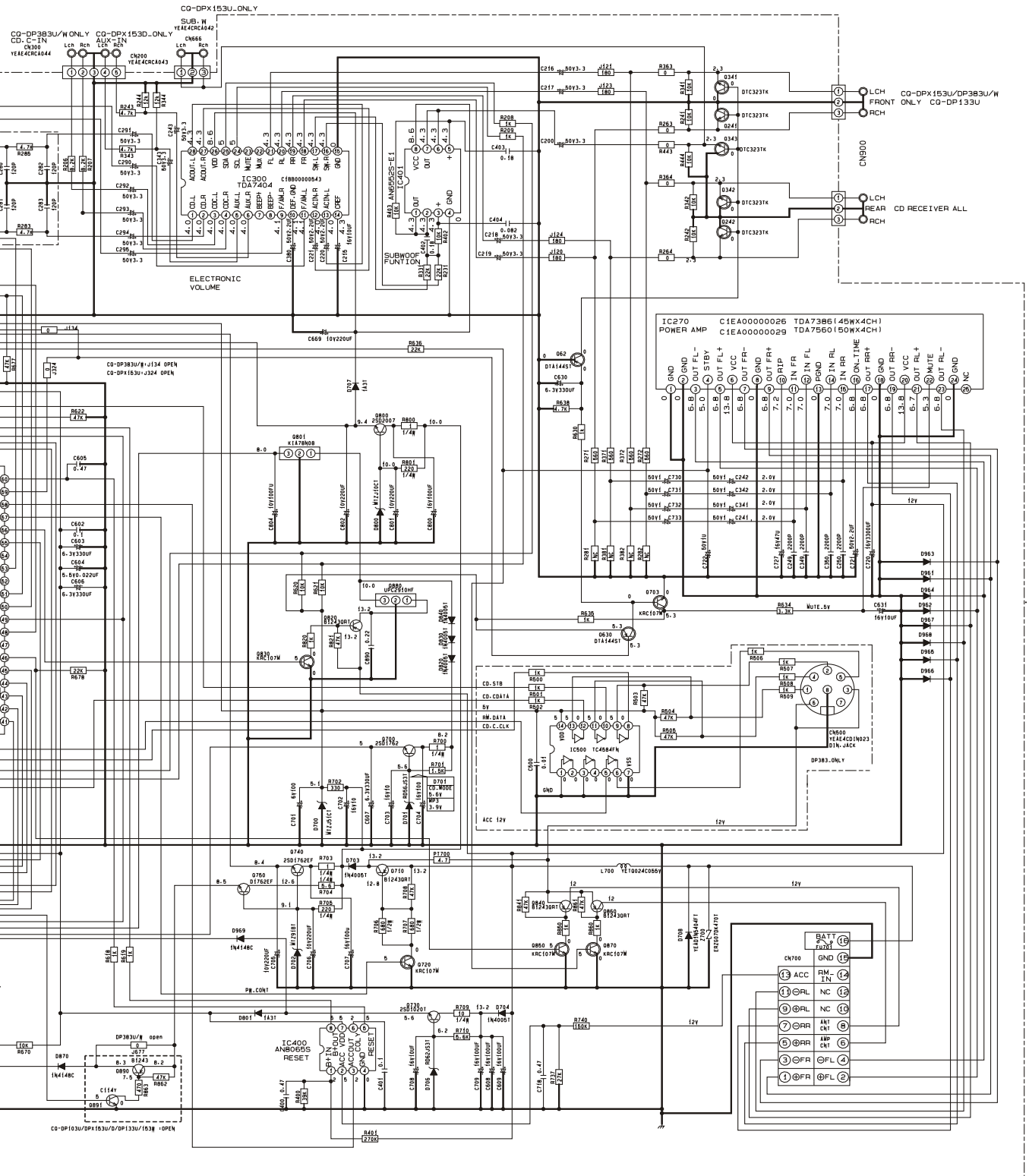

CQ-DP103/DP133/DPX153(U.W.D) MainBlock

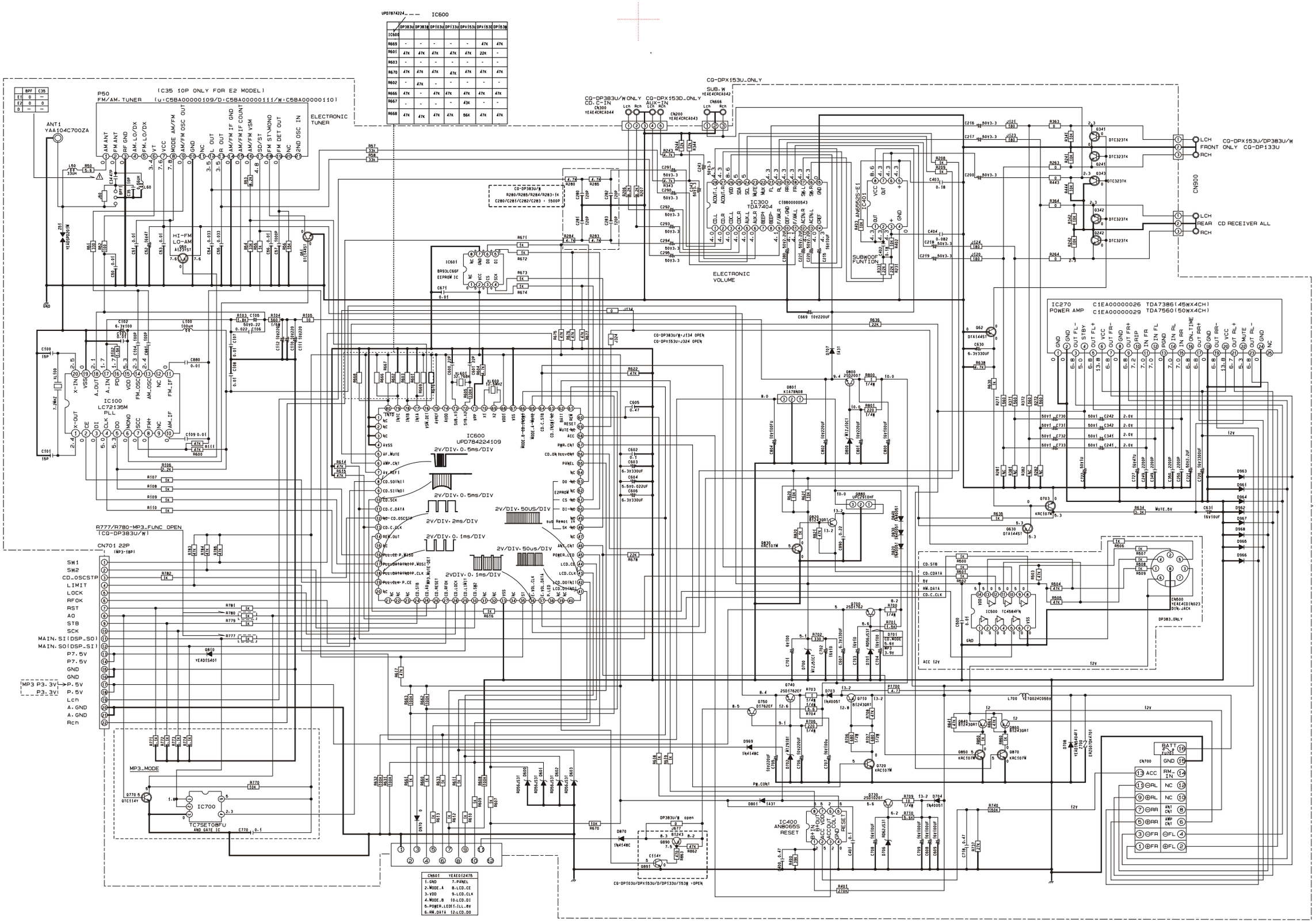
IC600
UPD7874224
IC100
LC72135M
PLL
IC300
TDA7404
ELECTRONIC VOLUME
SUBWOOF FUNTION
IC270
POWER AMP
C1EA00000026 TDA7386(45WX4CH)
C1EA00000029 TDA7560(50WX4CH)
IC600
UPD78422A109
IC700
TC7SET08FU
AND GATE IC
IC400
AN8065S
RESET
IC500
TC4584FN
CN900
CN700
CN701 22P
CN601
CN600
YEAE4CDIN023
DIN-JACK
CQ-DPX153U_ONLY
CQ-DP383U/W ONLY
CD.C-IN
CQ-DPX153D_ONLY
AUX-IN
SUB.W
YEAE4CRCA042
CQ-DPX153U/DP383U/W
FRONT ONLY CQ-DP133U
CD RECEIVER ALL
ELECTRONIC TUNER
P50
FM/AM.TUNER
(C35 10P ONLY FOR E2 MODEL)
(u:C5BA00000109/D:C5BA00000111/W:C5BA00000110)
ANT.1
YAA104C700ZA
R777/R780-MP3_FUNC OPEN
(CQ-DP383U/W)
MP3_MODE
2V/DIV·0.5ms/DIV
2V/DIV·2ms/DIV
2V/DIV·0.1ms/DIV
2V/DIV·50us/DIV
2V/DIV·50US/DIV
2V/DIV·0.1ms/DIV
CQ-DP103/DP133/DPX153(U.W.D) MainBlock

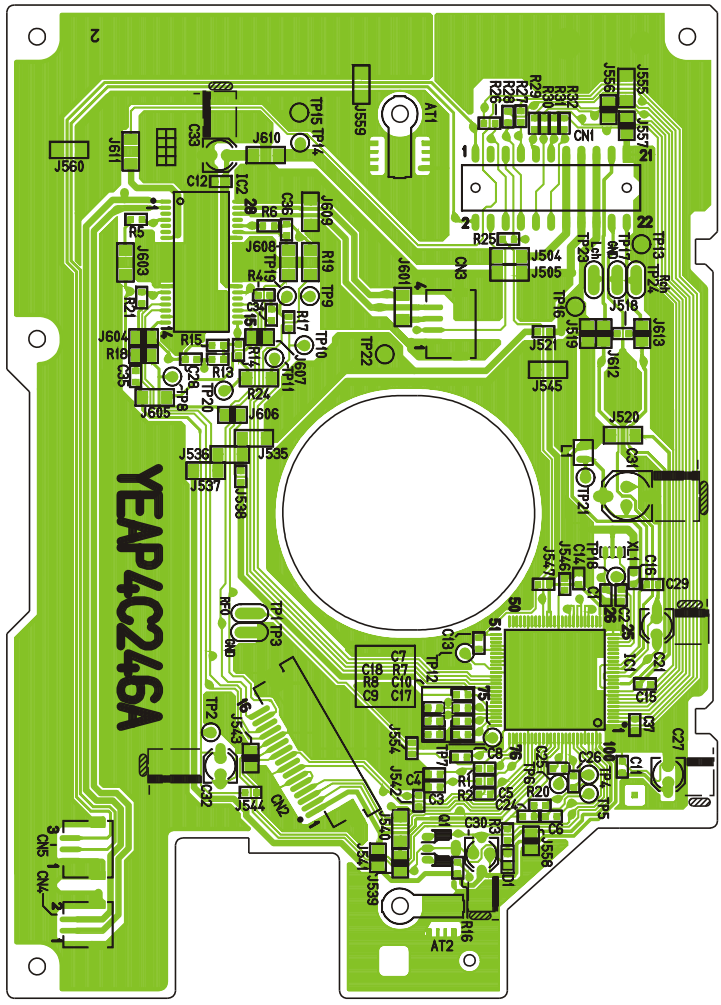

[E-4C236] [BOTTOMVIEW]

CQ-DP103/DP133/DPX153(U.W.D) CD SERVO PCB

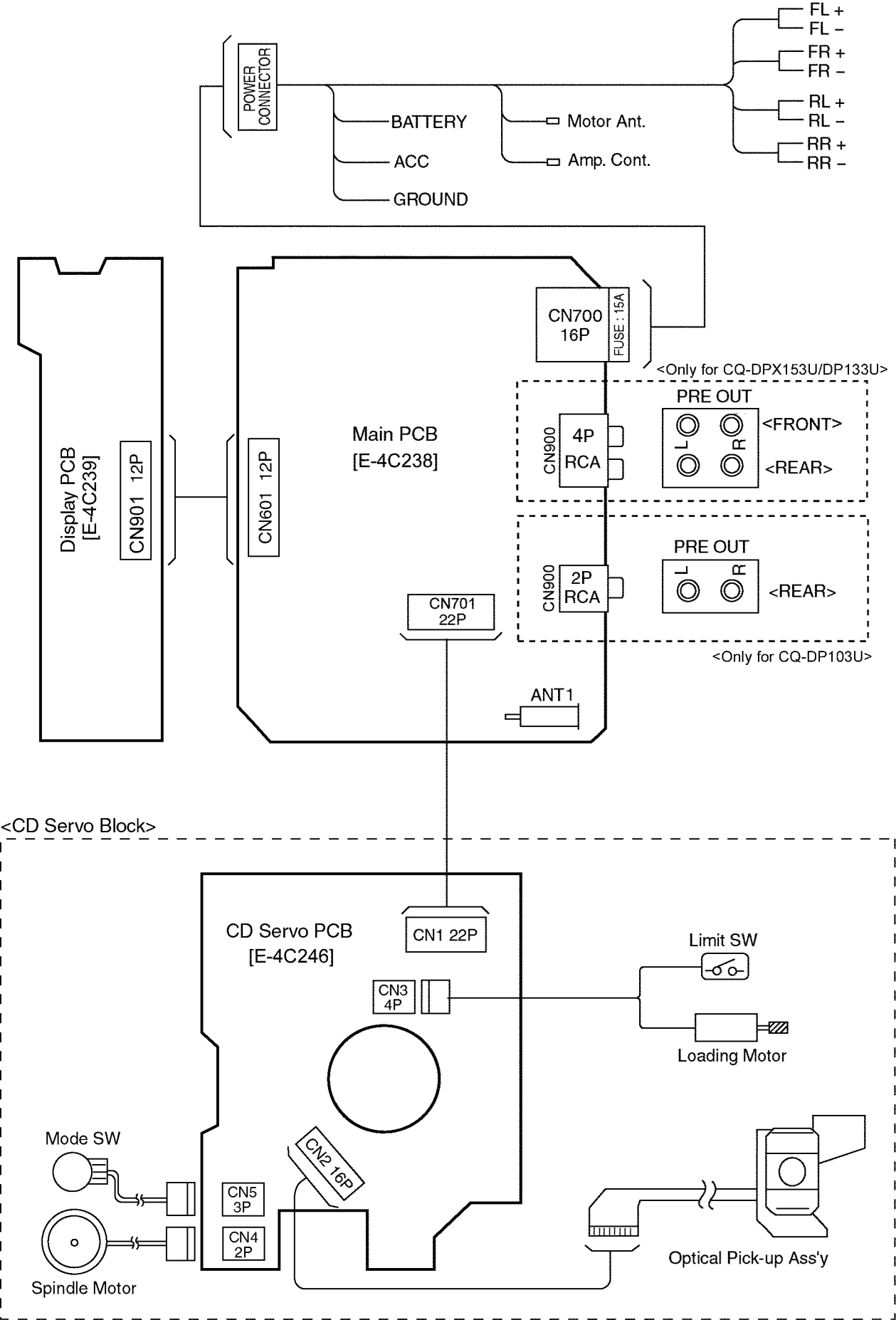
POWER CONNECTOR
BATTERY
ACC
GROUND
Motor Ant.
Amp. Cont.
FL +
FL –
FR +
FR –
RL +
RL –
RR +
RR –
Display PCB
[E-4C239]
CN901 12P
CN601 12P
Main PCB
[E-4C238]
CN700
16P
FUSE : 15A
<Only for CQ-DPX153U/DP133U>
CN900
4P
RCA
PRE OUT
L
R
<FRONT>
<REAR>
CN900
2P
RCA
PRE OUT
L
R
<REAR>
<Only for CQ-DP103U>
CN701
22P
ANT1
<CD Servo Block>
CD Servo PCB
[E-4C246]
CN1 22P
CN3
4P
Limit SW
Loading Motor
Mode SW
CN2 16P
CN5
3P
CN4
2P
Spindle Motor
Optical Pick-up Ass'y

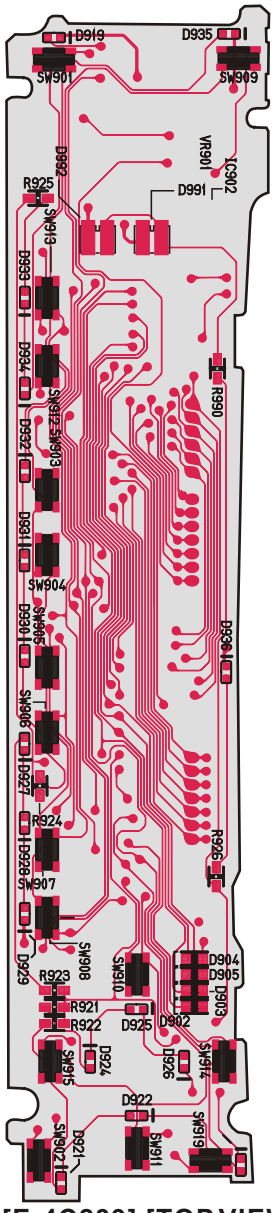

[E-4C239] [TOP VIEW]

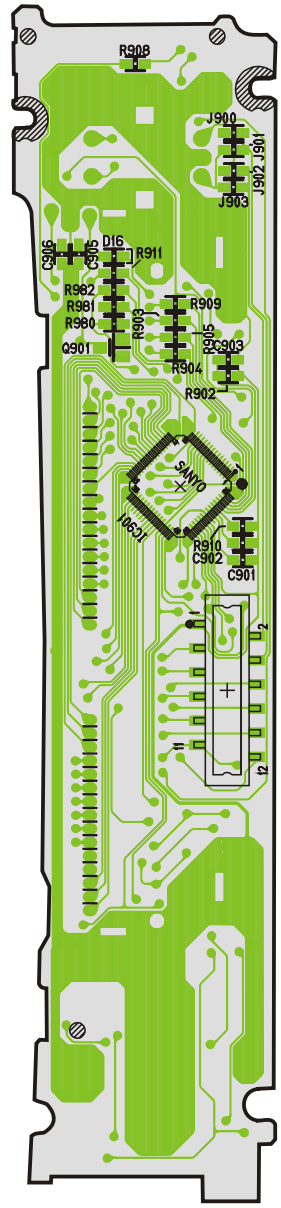

[E-4C239] [BOTTOM VIEW]

CQ-DP103/DP133/DPX153(U.W.D) Display PCB

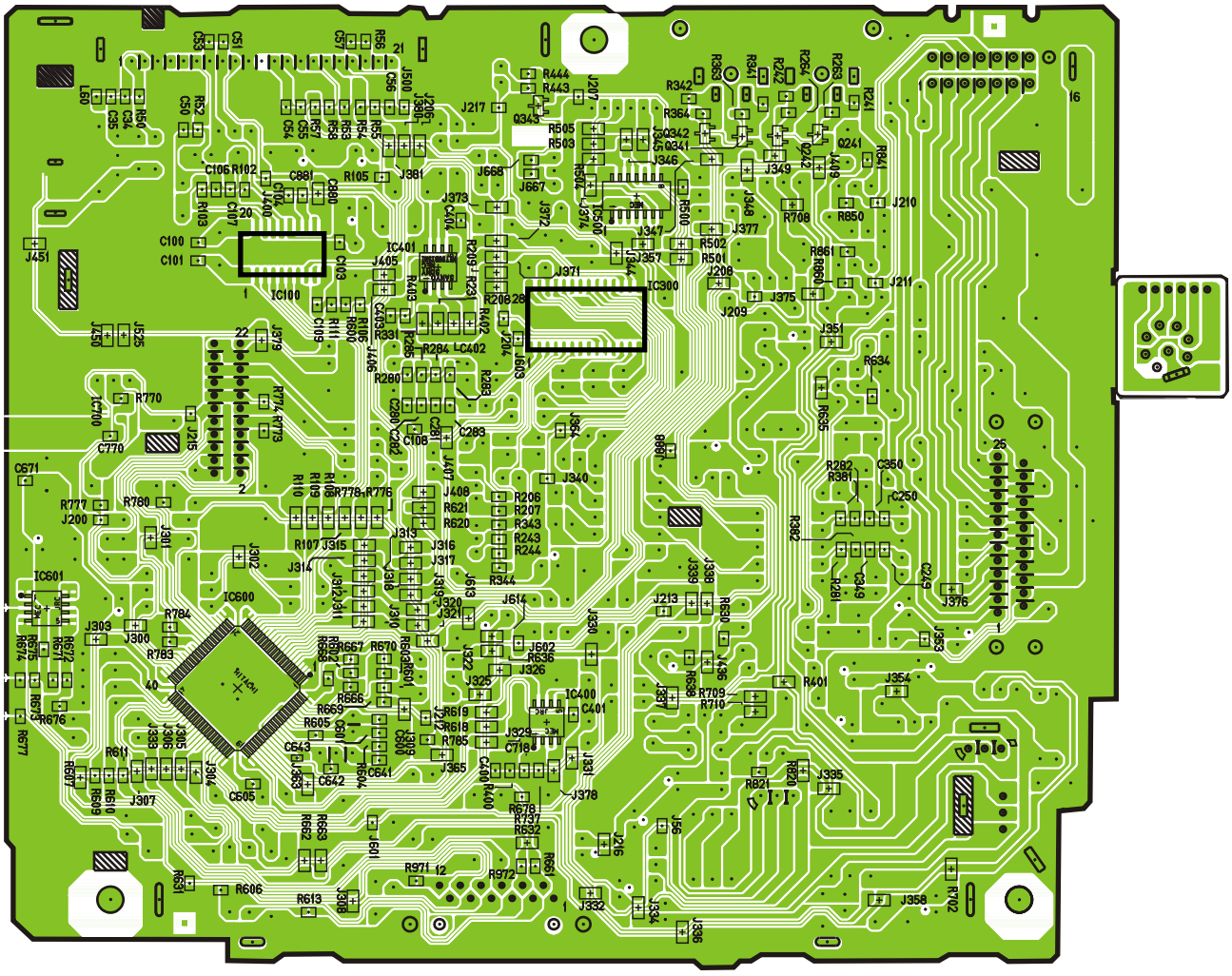

[E-4C238] [BOTTOMVIEW]

CQ-DP103/DP133/DPX153(U.W.D) Main PCB

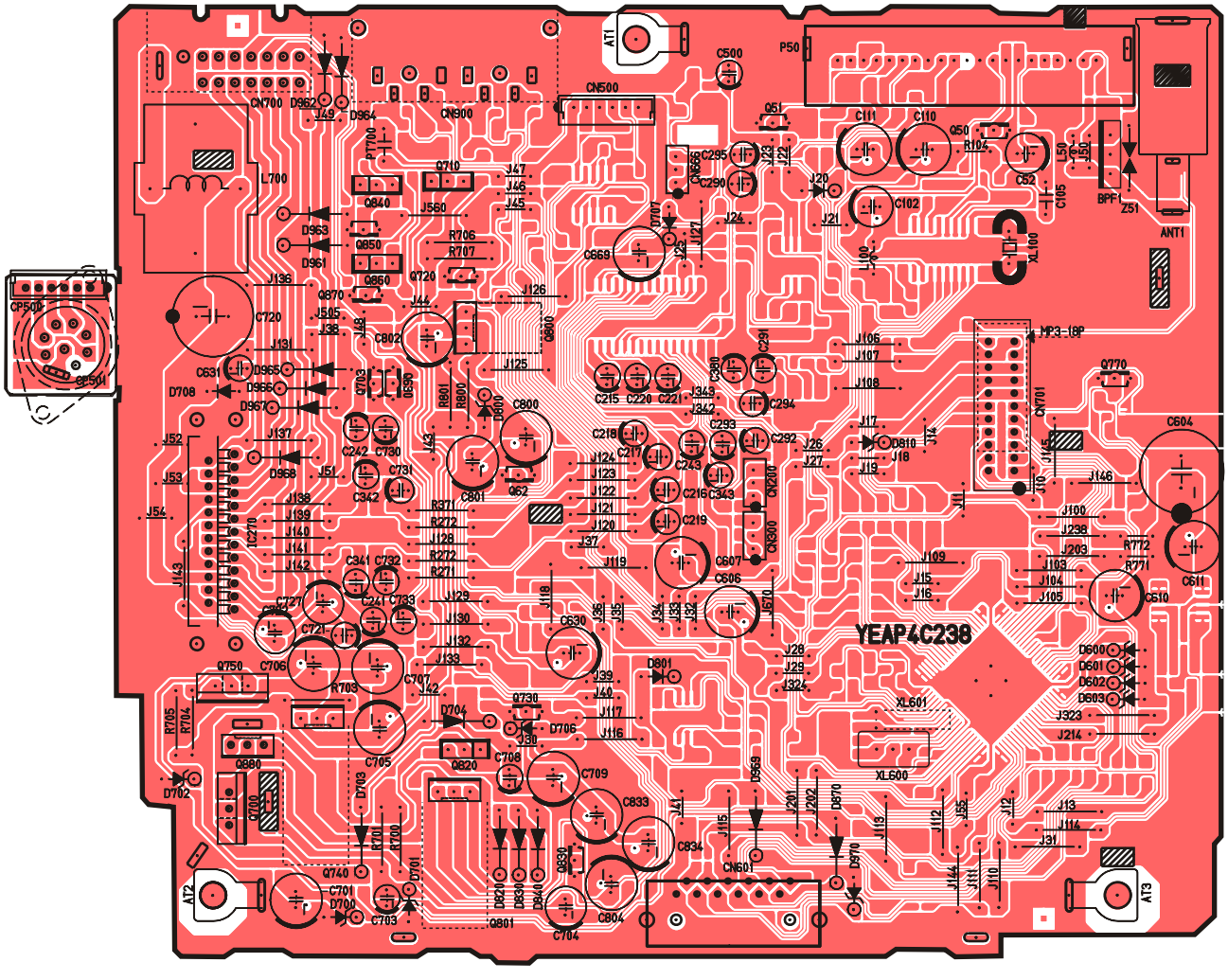

[E-4C238] [TOP VIEW]

CQ-DP103/DP133/DPX153(U.W.D) Main PCB