POWER
MENU
SOURCE
SEL
NUMBER
VOL
MUTE
#
1
2
3
RAND
SCAN
REP
4
5
6
7
8
9
BAND
0
DISP
SET
Panasonic
Car Audio

PWR
SHOB
MUTE
DIM
SOURCE
VOL PUSH SET
D-M
MP3/WMA
Panasonic
CQ-DF983W
MOSFET 50Wx4
MENU
OPEN
P.SET/DISC
TUNE/TRACK
BAND
SET/APM
FOLDER
DISP
CD RECEIVER WITH FULL DOT MATRIX DISPLAY

(CQ-DF983W)

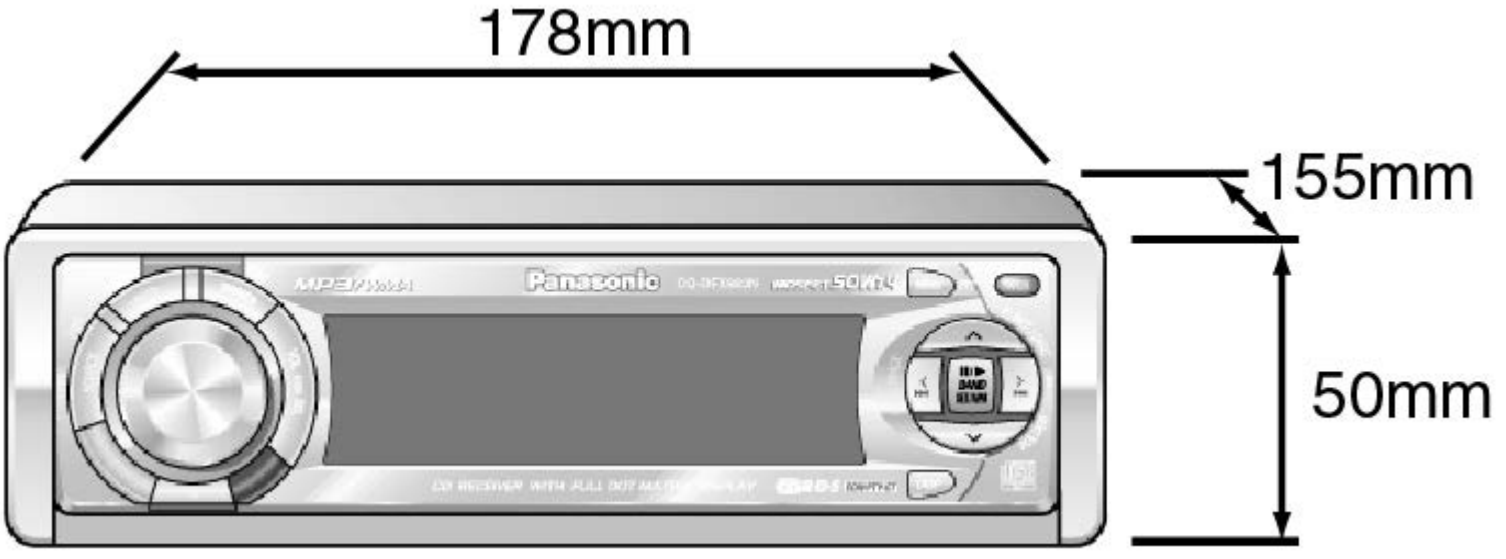
178mm
155mm
50mm
Panasonic
BAND
SCAN

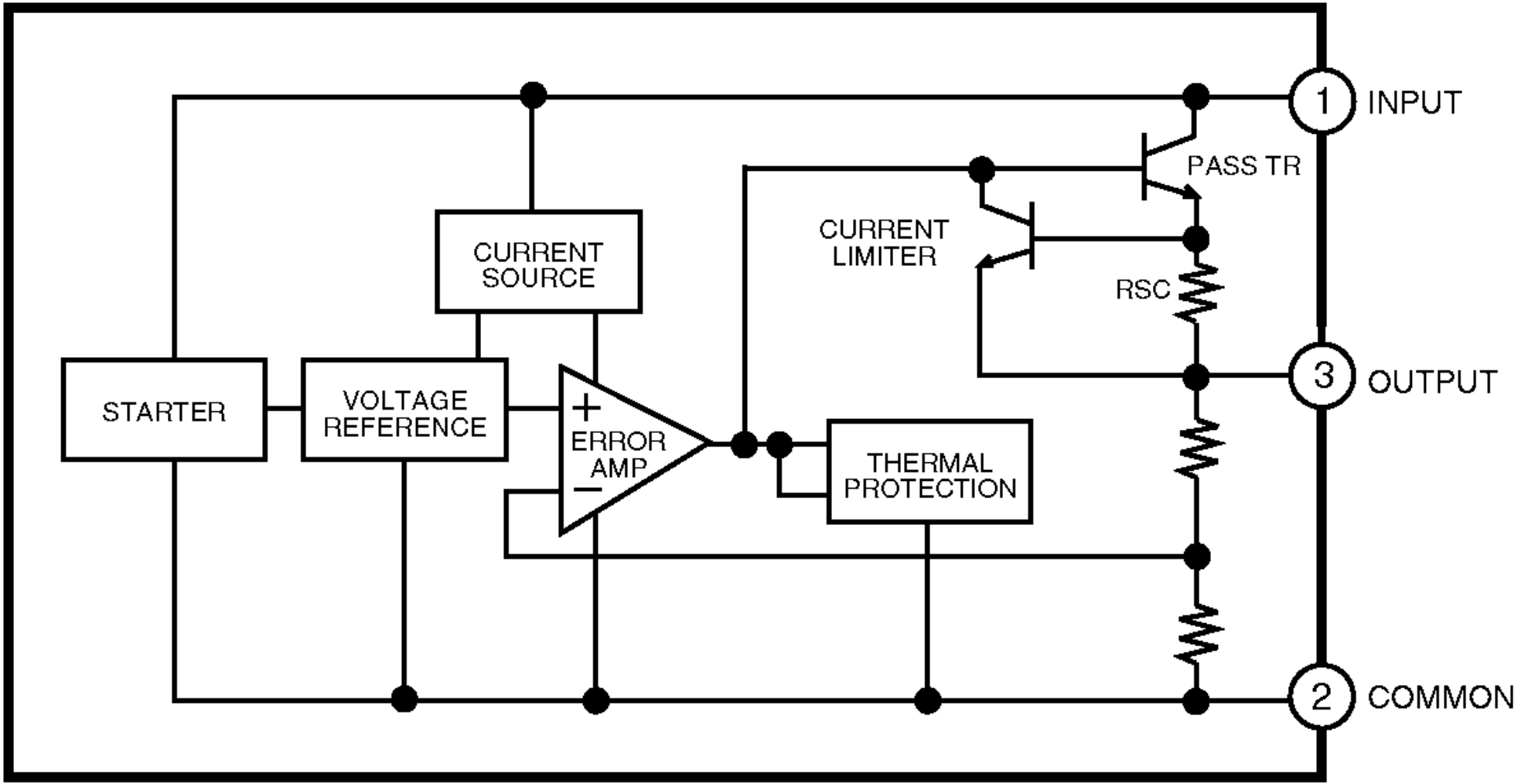
1
INPUT
PASS TR
CURRENT
LIMITER
CURRENT
SOURCE
RSC
3
OUTPUT
STARTER
VOLTAGE
REFERENCE
+
ERROR
AMP
−
THERMAL
PROTECTION
2
COMMON

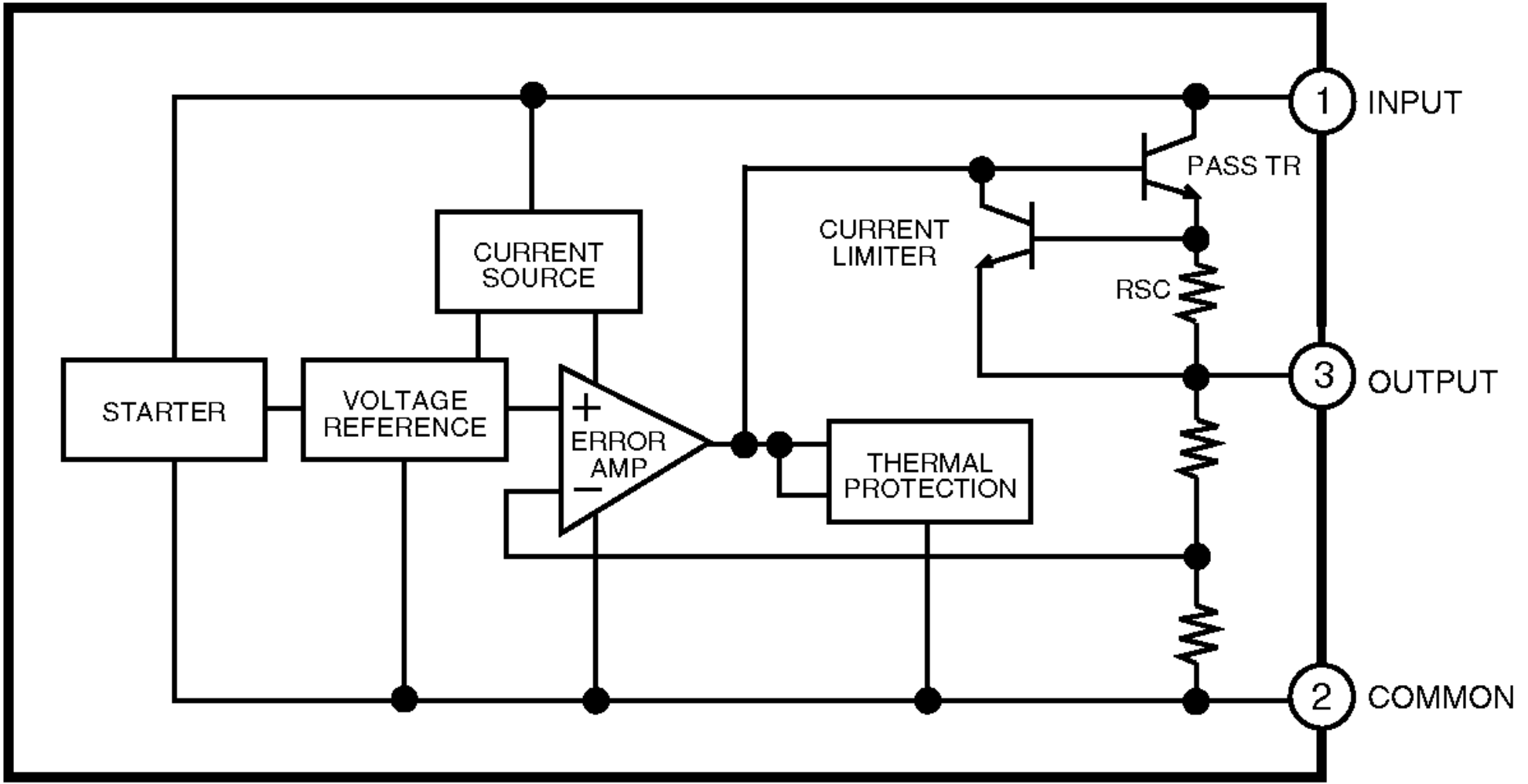
1
INPUT
PASS TR
CURRENT
LIMITER
CURRENT
SOURCE
RSC
3
OUTPUT
STARTER
VOLTAGE
REFERENCE
+
ERROR
AMP
−
THERMAL
PROTECTION
2
COMMON

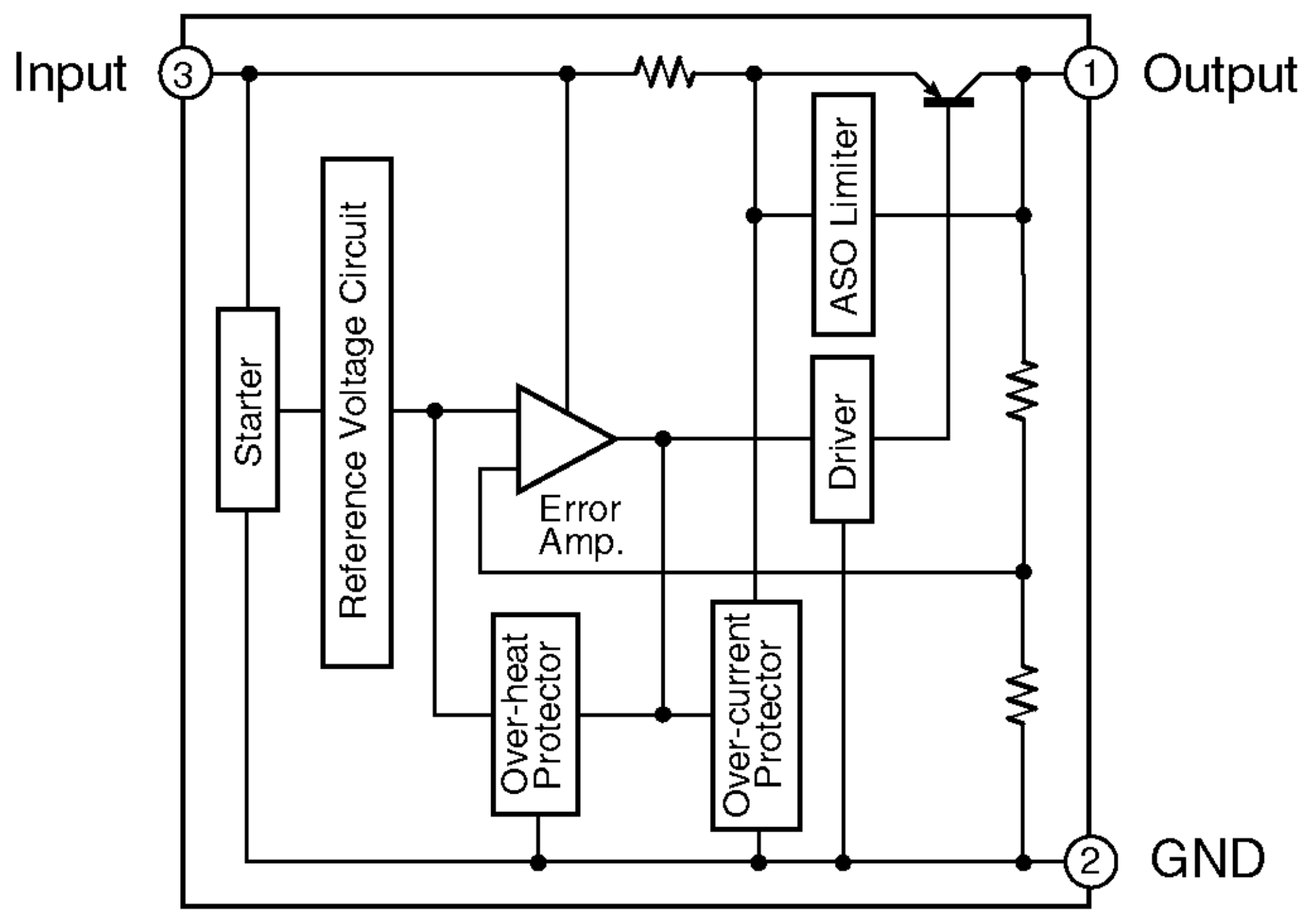
Input
3
1
Output
Starter
Reference Voltage Circuit
Error
Amp.
ASO Limiter
Driver
Over-heat
Protector
Over-current
Protector
2
GND

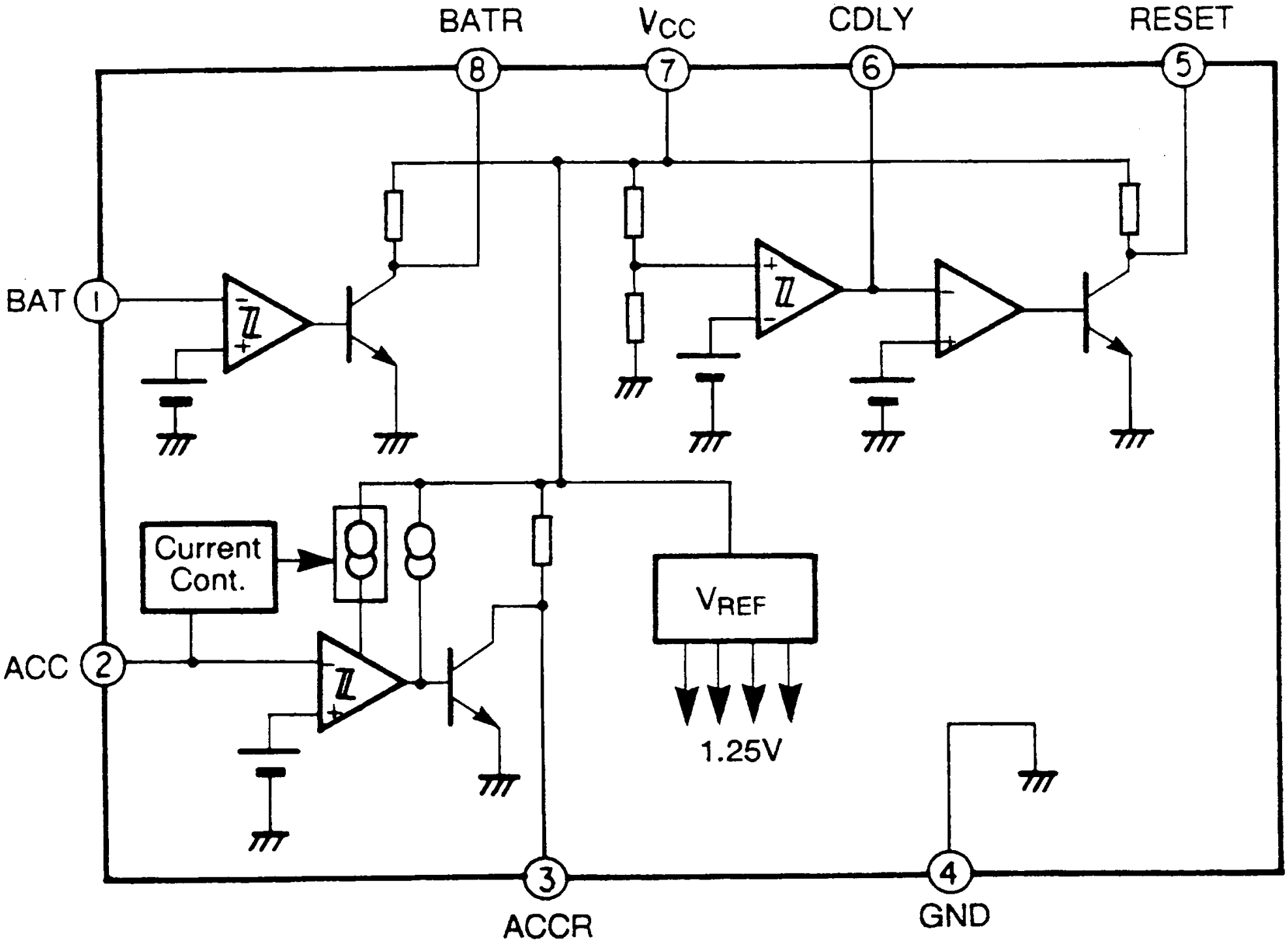
BATR
VCC
CDLY
RESET
8
7
6
5
BAT
1
Current Cont.
VREF
ACC
2
1.25V
3
ACCR
4
GND

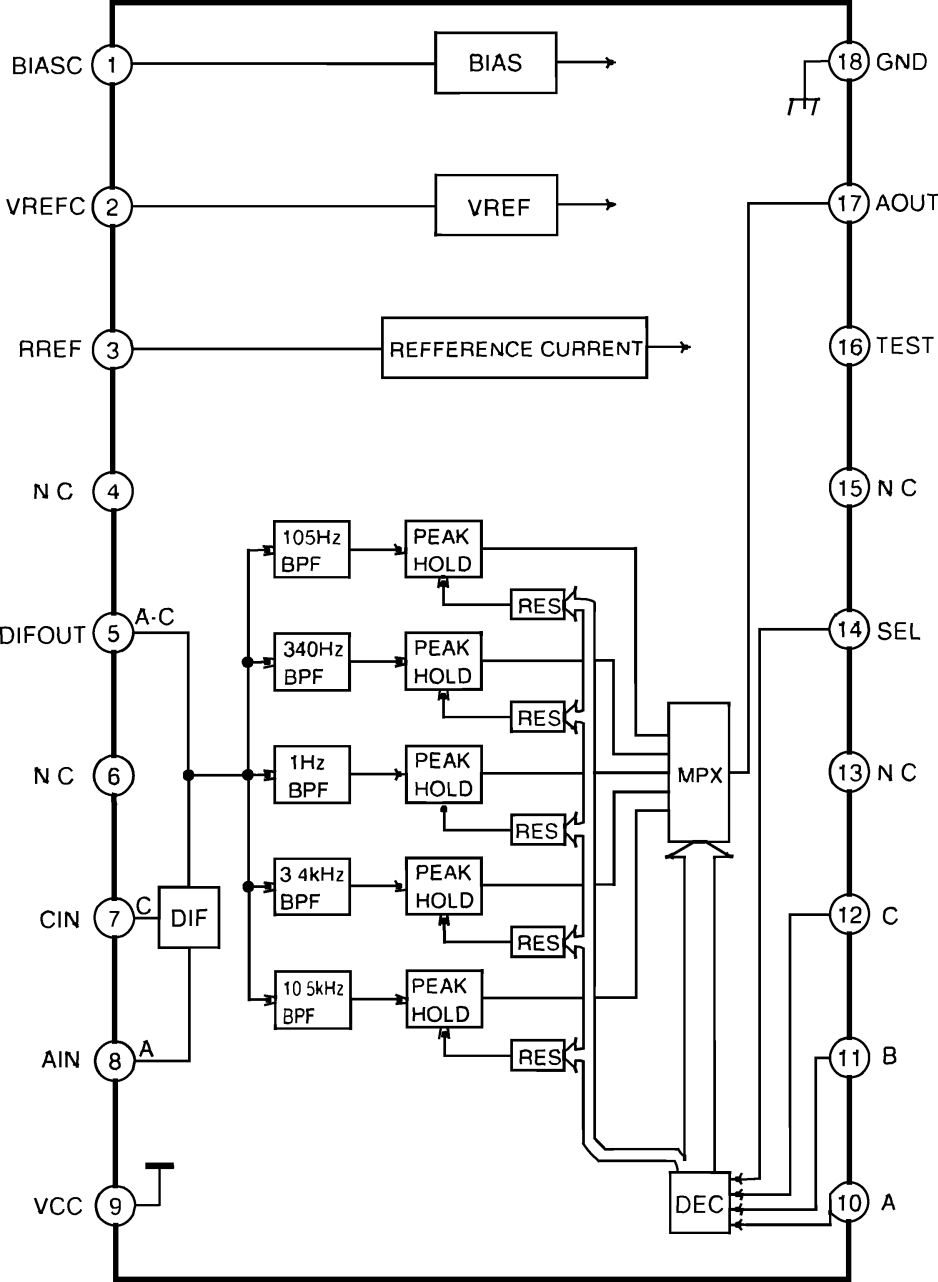
BIASC
1
BIAS
18
GND
VREFC
2
VREF
17
AOUT
RREF
3
REFFERENCE CURRENT
16
TEST
N C
4
15
N C
DIFOUT
5
A-C
14
SEL
N C
6
13
N C
CIN
7
C
DIF
12
C
AIN
8
A
11
B
VCC
9
10
A
105Hz BPF
340Hz BPF
1Hz BPF
3 4kHz BPF
10 5kHz BPF
PEAK HOLD
RES
MPX
DEC

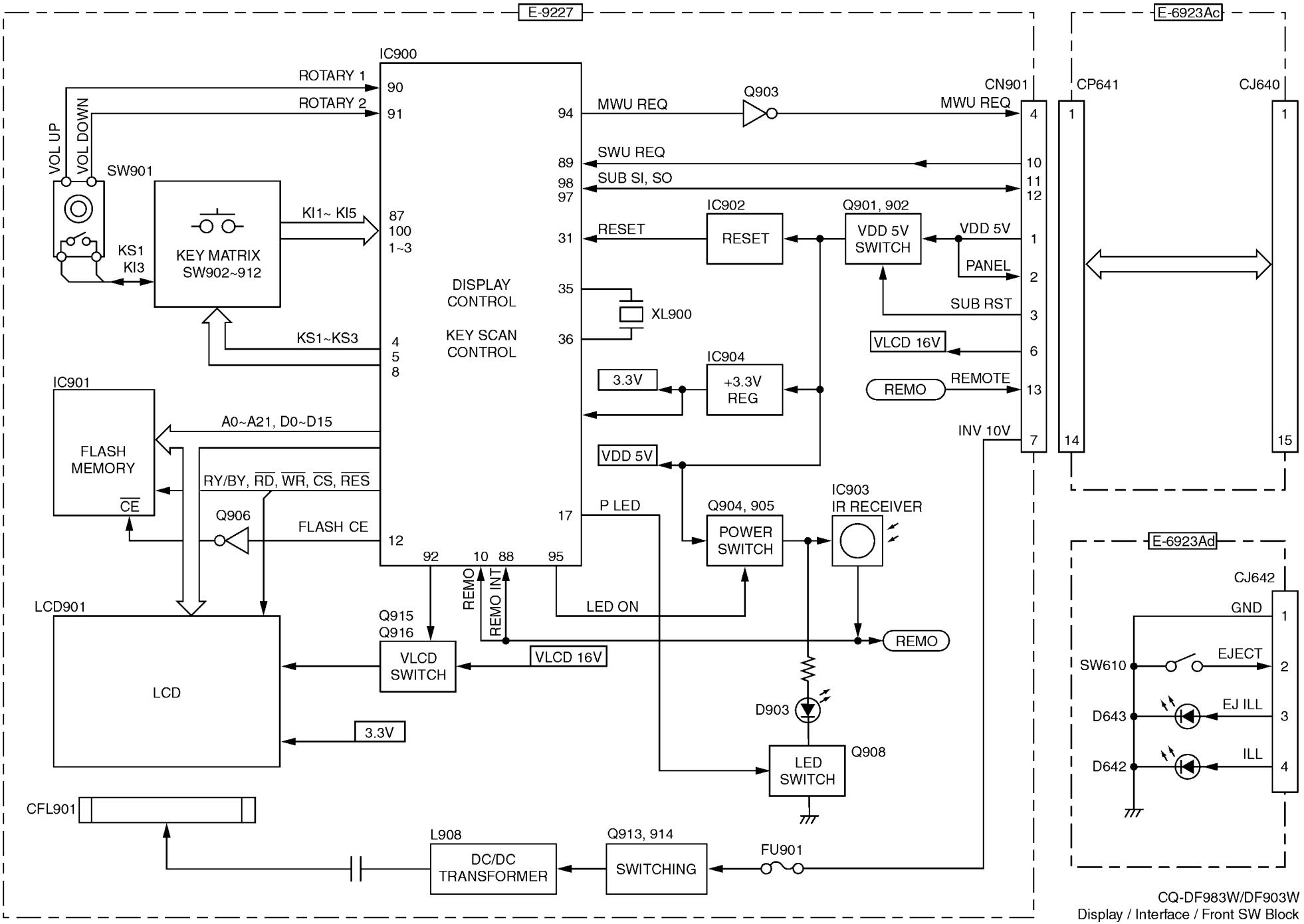

CQ-DF983W/DF903W
Display / Interface / Front SW Block

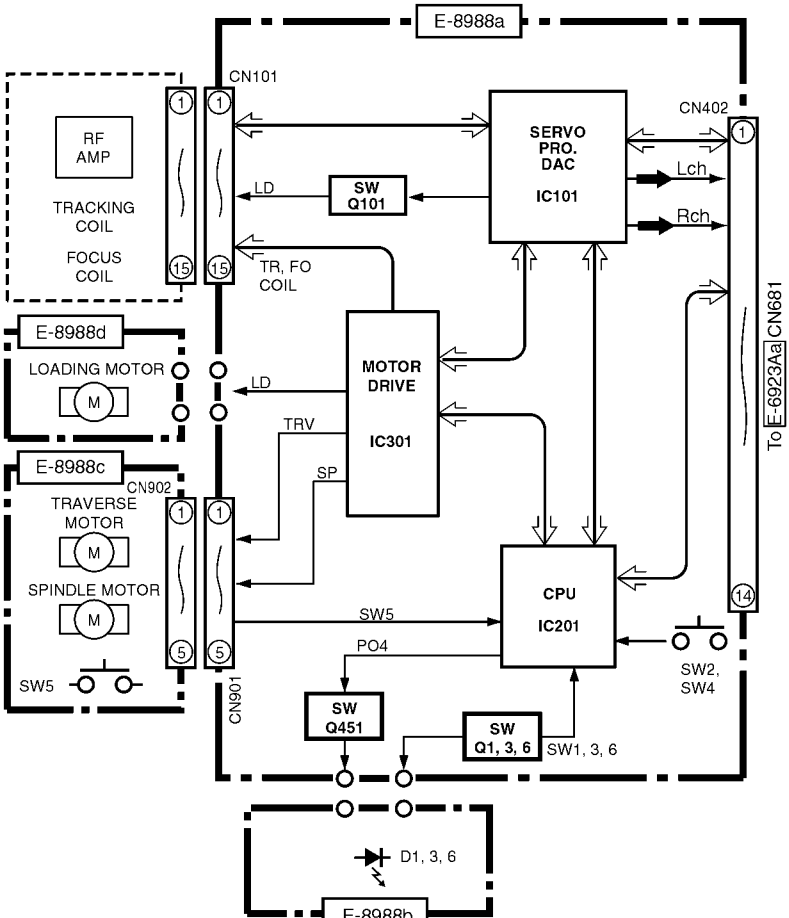
E-8988a
CN101
RF AMP
TRACKING COIL
FOCUS COIL
LD
SW Q101
SERVO PRO. DAC
IC101
CN402
Lch
Rch
TR, FO COIL
E-8988d
LOADING MOTOR
M
LD
MOTOR DRIVE
IC301
TRV
SP
To E-6923Aa CN681
E-8988c
CN902
TRAVERSE MOTOR
M
SPINDLE MOTOR
M
SW5
CPU
IC201
SW5
PO4
SW2, SW4
CN901
SW Q451
SW Q1, 3, 6
SW1, 3, 6
D1, 3, 6
E-8988b

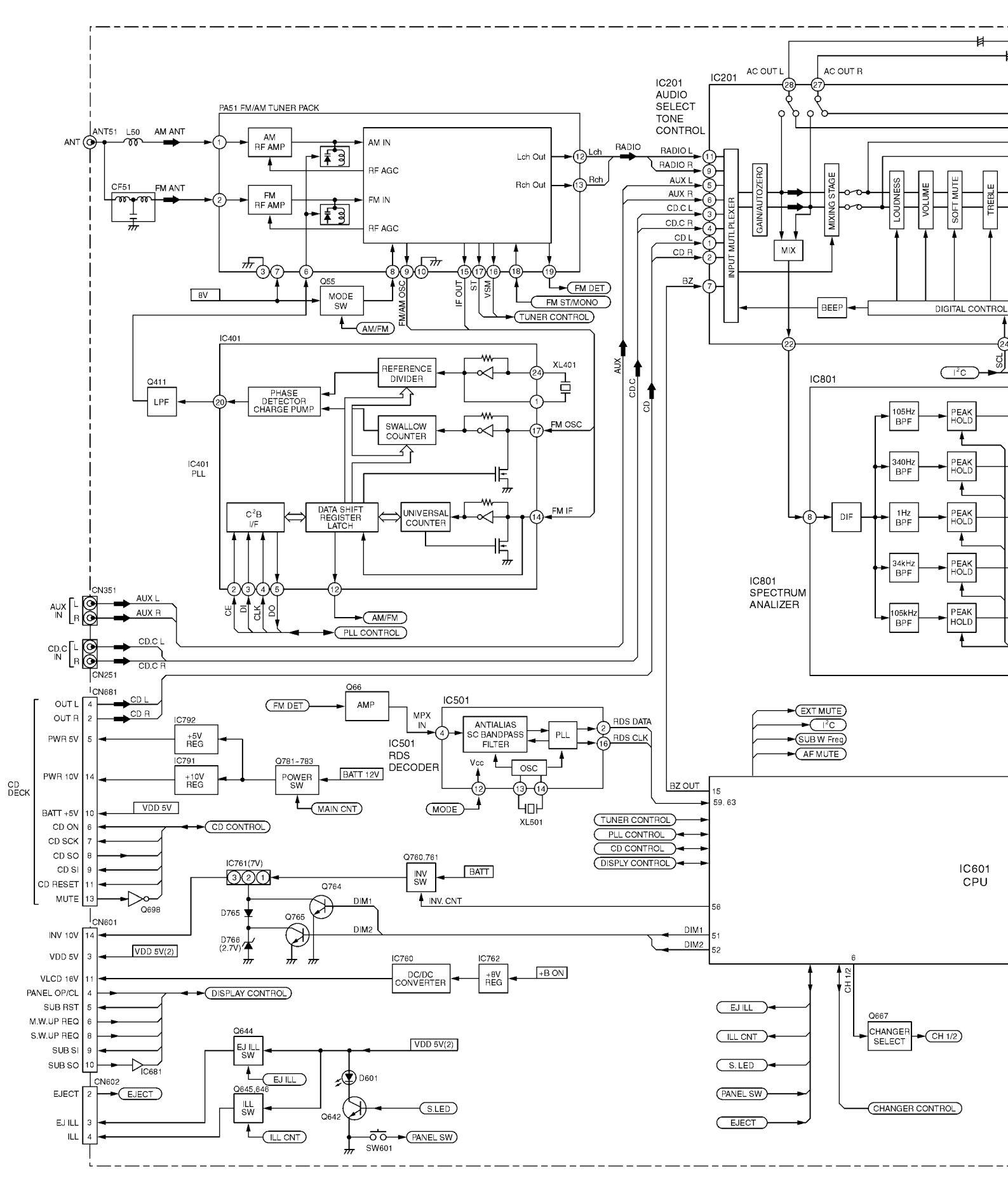
PA51 FM/AM TUNER PACK
ANT
ANT51
L50
AM ANT
CF51
FM ANT
AM RF AMP
FM RF AMP
AM IN
RF AGC
FM IN
RF AGC
Lch Out
Rch Out
Lch
Rch
RADIO
8V
Q55
MODE SW
AM/FM
FM/AM OSC
IF OUT
ST
VSM
FM DET
FM ST/MONO
TUNER CONTROL
IC201
IC201 AUDIO SELECT TONE CONTROL
AC OUT L
AC OUT R
RADIO L
RADIO R
AUX L
AUX R
CD.C L
CD.C R
CD L
CD R
BZ
INPUT MUTLPLEXER
GAIN/AUTOZERO
MIX
MIXING STAGE
LOUDNESS
VOLUME
SOFT MUTE
TREBLE
BEEP
DIGITAL CONTROL
AUX
CD.C
CD
IC401
Q411
LPF
PHASE DETECTOR CHARGE PUMP
REFERENCE DIVIDER
XL401
SWALLOW COUNTER
FM OSC
IC401 PLL
C²B I/F
DATA SHIFT REGISTER LATCH
UNIVERSAL COUNTER
FM IF
CE
DI
CLK
DO
AM/FM
PLL CONTROL
I²C
SCL
IC801
105Hz BPF
340Hz BPF
1Hz BPF
34kHz BPF
105kHz BPF
PEAK HOLD
DIF
IC801 SPECTRUM ANALIZER
CN351
AUX IN
AUX L
AUX R
CD.C IN
CD.C L
CD.C R
CN251
CN681
OUT L
OUT R
PWR 5V
PWR 10V
BATT +5V
CD ON
CD SCK
CD SO
CD SI
CD RESET
MUTE
CD DECK
CD L
CD R
IC792
+5V REG
IC791
+10V REG
Q781~783
POWER SW
BATT 12V
MAIN CNT
VDD 5V
CD CONTROL
FM DET
Q66
AMP
MPX IN
IC501
IC501 RDS DECODER
ANTIALIAS SC BANDPASS FILTER
PLL
OSC
Vcc
MODE
XL501
RDS DATA
RDS CLK
EXT MUTE
I²C
SUB W Freq
AF MUTE
BZ OUT
TUNER CONTROL
PLL CONTROL
CD CONTROL
DISPLY CONTROL
IC601 CPU
IC761(7V)
Q760.761
INV SW
BATT
INV. CNT
Q764
Q765
D765
D766 (2.7V)
DIM1
DIM2
Q698
CN601
INV 10V
VDD 5V
VDD 5V(2)
VLCD 16V
PANEL OP/CL
SUB RST
M.W.UP REQ
S.W.UP REQ
SUB SI
SUB SO
IC681
IC760
DC/DC CONVERTER
IC762
+8V REG
+B ON
DISPLAY CONTROL
Q644
EJ ILL SW
VDD 5V(2)
EJ ILL
D601
CN602
EJECT
Q645,646
ILL SW
Q642
S.LED
EJ ILL
ILL
ILL CNT
SW601
PANEL SW
CH 1/2
Q667
CHANGER SELECT
CHANGER CONTROL

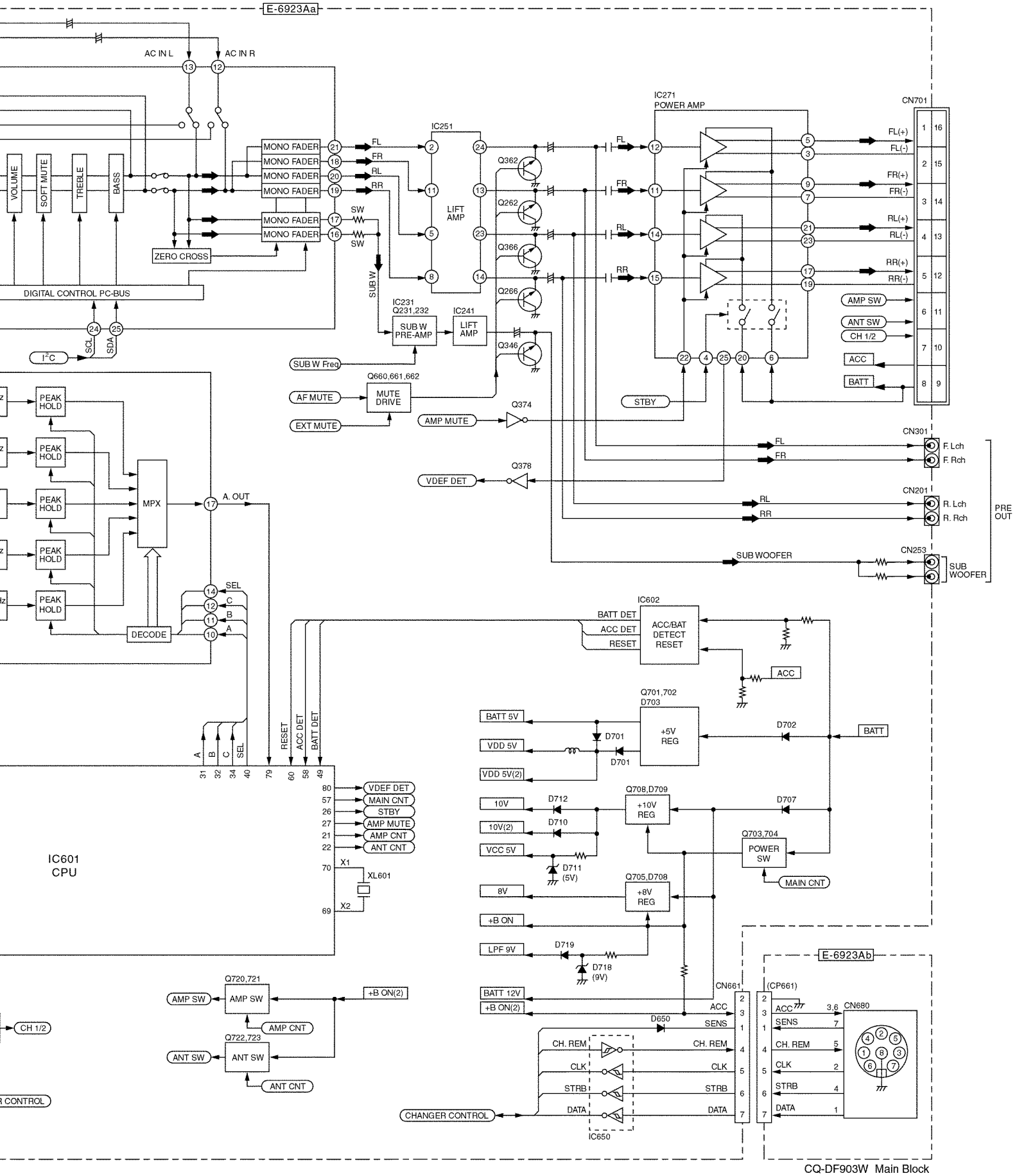
E-6923Aa
AC IN L
AC IN R
VOLUME
SOFT MUTE
TREBLE
BASS
MONO FADER
ZERO CROSS
DIGITAL CONTROL PC-BUS
I²C
SCL
SDA
SW
SUB W
IC251
LIFT AMP
Q362
Q262
Q366
Q266
Q346
IC231
Q231,232
SUB W PRE-AMP
IC241
LIFT AMP
SUB W Freq
Q660,661,662
MUTE DRIVE
AF MUTE
EXT MUTE
AMP MUTE
Q374
VDEF DET
Q378
IC271
POWER AMP
STBY
CN701
FL(+)
FL(-)
FR(+)
FR(-)
RL(+)
RL(-)
RR(+)
RR(-)
AMP SW
ANT SW
CH 1/2
ACC
BATT
CN301
F. Lch
F. Rch
CN201
R. Lch
R. Rch
PRE OUT
SUB WOOFER
CN253
PEAK HOLD
MPX
A. OUT
DECODE
SEL
IC602
BATT DET
ACC DET
RESET
ACC/BAT DETECT RESET
Q701,702
D703
+5V REG
BATT 5V
VDD 5V
VDD 5V(2)
D701
D702
BATT
Q708,D709
+10V REG
10V
10V(2)
VCC 5V
D712
D710
D711 (5V)
D707
Q703,704
POWER SW
MAIN CNT
Q705,D708
+8V REG
8V
+B ON
LPF 9V
D719
D718 (9V)
IC601
CPU
VDEF DET
MAIN CNT
STBY
AMP MUTE
AMP CNT
ANT CNT
XL601
Q720,721
AMP SW
+B ON(2)
Q722,723
ANT SW
CH 1/2
R CONTROL
E-6923Ab
CN661
(CP661)
CN680
BATT 12V
+B ON(2)
D650
SENS
CH. REM
CLK
STRB
DATA
CHANGER CONTROL
IC650

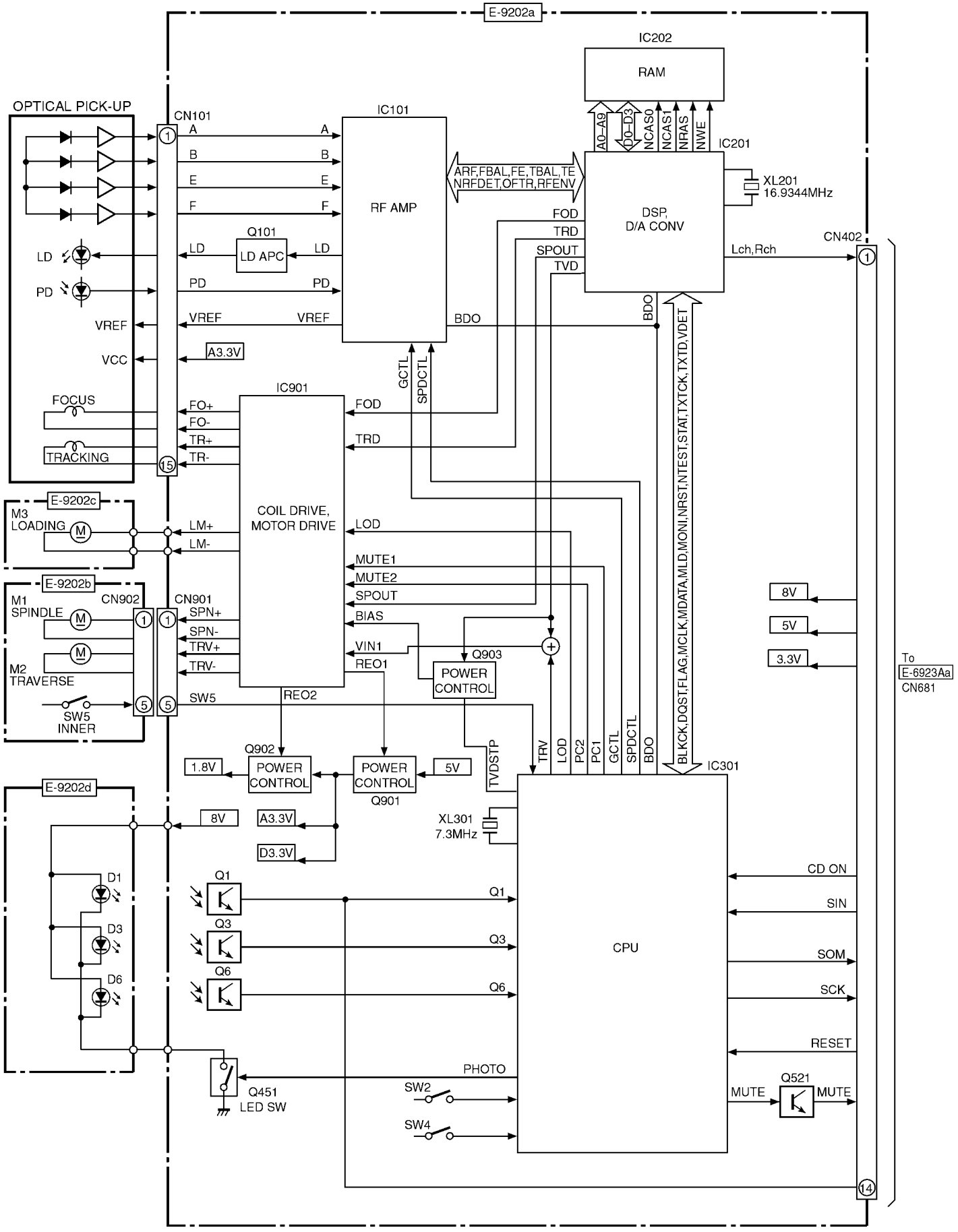
E-9202a
IC202
RAM
OPTICAL PICK-UP
CN101
IC101
A0–A9
D0–D3
NCAS0
NCAS1
NRAS
NWE
IC201
A
B
E
F
RF AMP
ARF,FBAL,FE,TBAL,TE
NRFDET,OFTR,RFENV
XL201
16.9344MHz
DSP,
D/A CONV
FOD
TRD
SPOUT
TVD
Q101
LD APC
LD
PD
VREF
VCC
A3.3V
BDO
CN402
Lch,Rch
GCTL
SPDCTL
IC901
FOCUS
TRACKING
FO+
FO-
TR+
TR-
COIL DRIVE,
MOTOR DRIVE
E-9202c
M3
LOADING
LM+
LM-
LOD
MUTE1
MUTE2
SPOUT
BIAS
VIN1
REO1
REO2
E-9202b
M1
SPINDLE
CN902
CN901
SPN+
SPN-
TRV+
TRV-
M2
TRAVERSE
SW5
INNER
Q903
POWER
CONTROL
8V
5V
3.3V
To
E-6923Aa
CN681
BLKCK,DQST,FLAG,MCLK,MDATA,MLD,MONI,NRST,NTEST,STAT,TXTCK,TXTD,VDET
Q902
1.8V
POWER
CONTROL
POWER
CONTROL
Q901
TVDSTP
TRV
LOD
PC2
PC1
GCTL
SPDCTL
BDO
IC301
E-9202d
8V
A3.3V
D3.3V
XL301
7.3MHz
D1
D3
D6
Q1
Q3
Q6
CPU
CD ON
SIN
SOM
SCK
RESET
PHOTO
Q451
LED SW
SW2
SW4
MUTE
Q521
MUTE

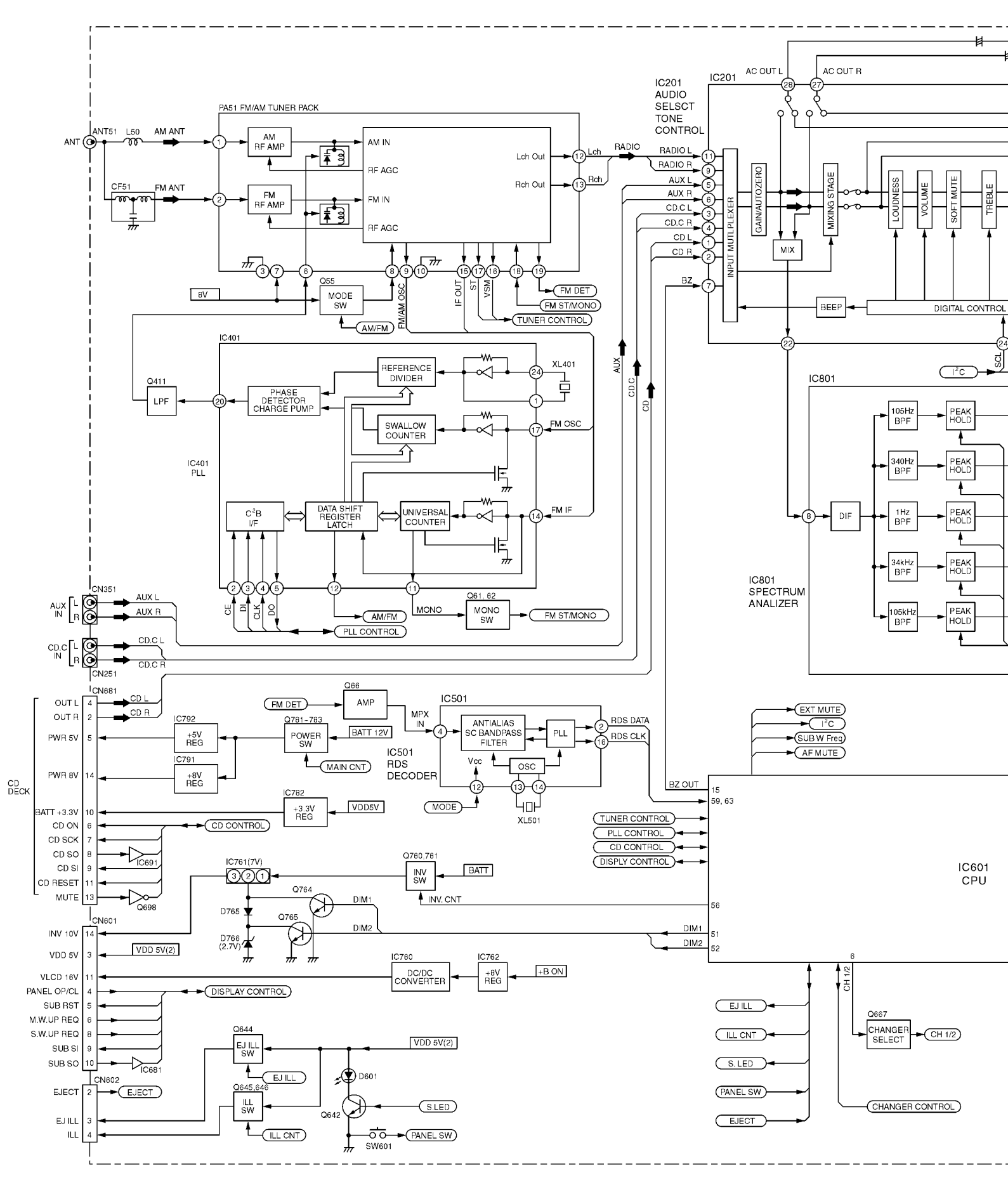
PA51 FM/AM TUNER PACK
ANT
ANT51
L50
AM ANT
CF51
FM ANT
AM RF AMP
FM RF AMP
AM IN
RF AGC
FM IN
RF AGC
Lch Out
Rch Out
Lch
Rch
RADIO
8V
Q55
MODE SW
AM/FM
FM/AM OSC
IF OUT
ST
VSM
FM DET
FM ST/MONO
TUNER CONTROL
IC201
IC201 AUDIO SELSCT TONE CONTROL
AC OUT L
AC OUT R
RADIO L
RADIO R
AUX L
AUX R
CD.C L
CD.C R
CD L
CD R
BZ
INPUT MUTLPLEXER
GAIN/AUTOZERO
MIX
MIXING STAGE
LOUDNESS
VOLUME
SOFT MUTE
TREBLE
BEEP
DIGITAL CONTROL
AUX
CD.C
CD
I²C
SCL
IC401
IC401 PLL
Q411
LPF
PHASE DETECTOR CHARGE PUMP
REFERENCE DIVIDER
XL401
SWALLOW COUNTER
FM OSC
C²B I/F
DATA SHIFT REGISTER LATCH
UNIVERSAL COUNTER
FM IF
CE
DI
CLK
DO
PLL CONTROL
MONO
Q61, 62
MONO SW
FM ST/MONO
IC801
IC801 SPECTRUM ANALIZER
DIF
105Hz BPF
340Hz BPF
1Hz BPF
34kHz BPF
105kHz BPF
PEAK HOLD
CN351
AUX IN
AUX L
AUX R
CD.C IN
CD.C L
CD.C R
CN251
CN681
CD DECK
OUT L
OUT R
PWR 5V
PWR 8V
BATT +3.3V
CD ON
CD SCK
CD SO
CD SI
CD RESET
MUTE
CD L
CD R
IC792
+5V REG
IC791
+8V REG
Q781-783
POWER SW
BATT 12V
MAIN CNT
IC782
+3.3V REG
VDD5V
CD CONTROL
IC691
Q698
Q66
AMP
FM DET
IC501
IC501 RDS DECODER
MPX IN
ANTIALIAS SC BANDPASS FILTER
PLL
OSC
Vcc
MODE
XL501
RDS DATA
RDS CLK
EXT MUTE
I²C
SUB W Freq
AF MUTE
BZ OUT
TUNER CONTROL
PLL CONTROL
CD CONTROL
DISPLY CONTROL
IC601
IC601 CPU
IC761(7V)
Q760,761
INV SW
BATT
INV. CNT
Q764
Q765
D765
D766 (2.7V)
DIM1
DIM2
CN601
INV 10V
VDD 5V
VDD 5V(2)
VLCD 16V
PANEL OP/CL
SUB RST
M.W.UP REQ
S.W.UP REQ
SUB SI
SUB SO
IC681
IC760
DC/DC CONVERTER
IC762
+8V REG
+B ON
DISPLAY CONTROL
CN602
EJECT
EJ ILL
ILL
Q644
EJ ILL SW
Q645,646
ILL SW
ILL CNT
D601
Q642
S.LED
SW601
PANEL SW
CH 1/2
Q667
CHANGER SELECT
CHANGER CONTROL

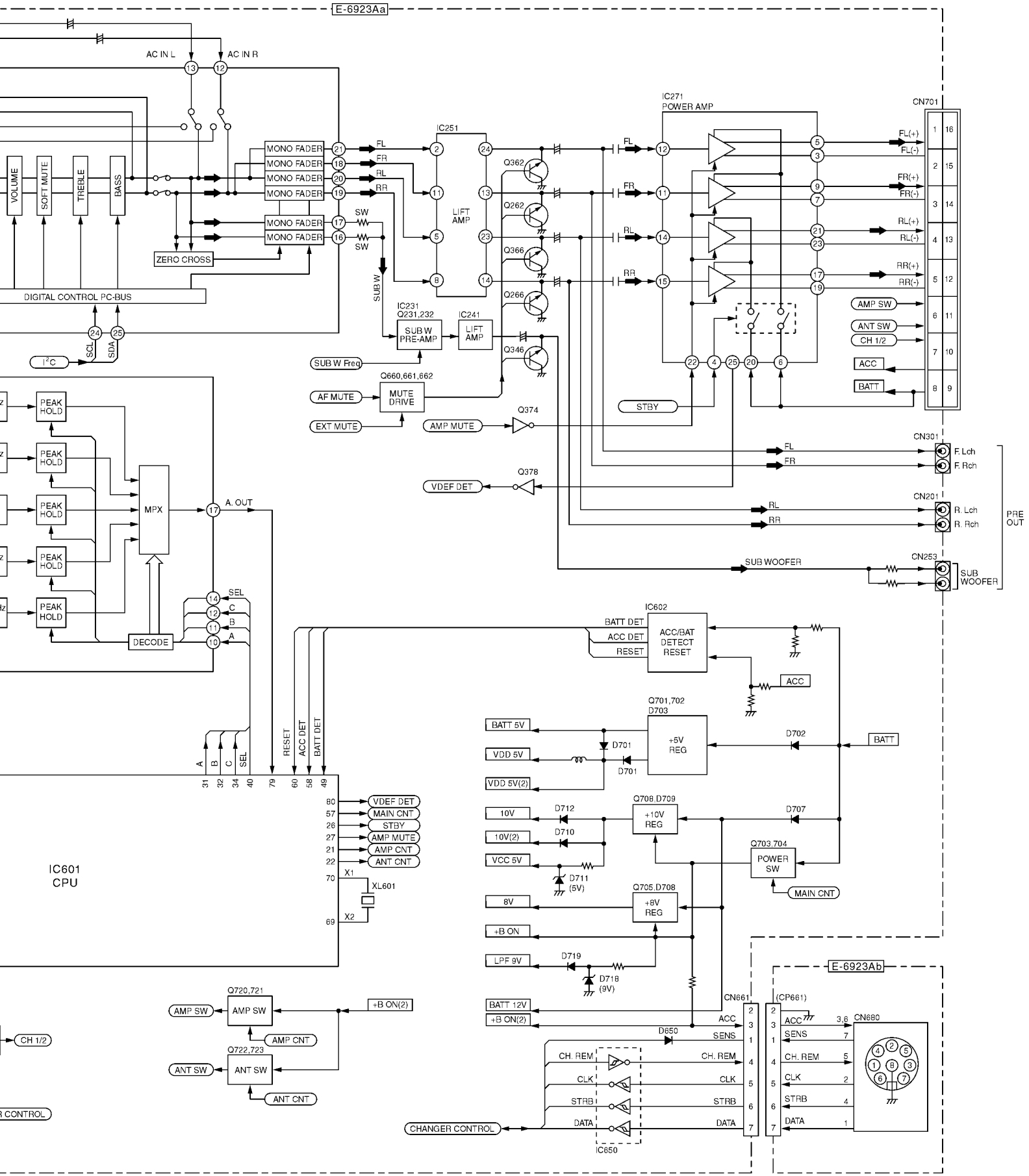
E-6923Aa
AC IN L
AC IN R
VOLUME
SOFT MUTE
TREBLE
BASS
MONO FADER
ZERO CROSS
DIGITAL CONTROL PC-BUS
I²C
SCL
SDA
IC251
LIFT AMP
SUB W
IC231 Q231,232
SUB W PRE-AMP
IC241
LIFT AMP
SUB W Freq
Q660,661,662
MUTE DRIVE
AF MUTE
EXT MUTE
Q374
AMP MUTE
Q378
VDEF DET
IC271
POWER AMP
CN701
FL(+)
FL(-)
FR(+)
FR(-)
RL(+)
RL(-)
RR(+)
RR(-)
AMP SW
ANT SW
CH 1/2
ACC
BATT
STBY
CN301
F. Lch
F. Rch
CN201
R. Lch
R. Rch
PRE OUT
SUB WOOFER
CN253
PEAK HOLD
MPX
A. OUT
DECODE
SEL
IC601
CPU
RESET
ACC DET
BATT DET
IC602
ACC/BAT DETECT RESET
BATT 5V
VDD 5V
VDD 5V(2)
Q701,702 D703
+5V REG
D701
D702
10V
10V(2)
VCC 5V
D712
D710
D711 (5V)
Q708,D709
+10V REG
D707
Q703,704
POWER SW
MAIN CNT
8V
Q705,D708
+8V REG
+B ON
LPF 9V
D719
D718 (9V)
VDEF DET
MAIN CNT
STBY
AMP MUTE
AMP CNT
ANT CNT
XL601
X1
X2
Q720,721
AMP SW
+B ON(2)
Q722,723
ANT SW
BATT 12V
CN661
(CP661)
CN680
D650
SENS
CH. REM
CLK
STRB
DATA
CHANGER CONTROL
IC650
E-6923Ab

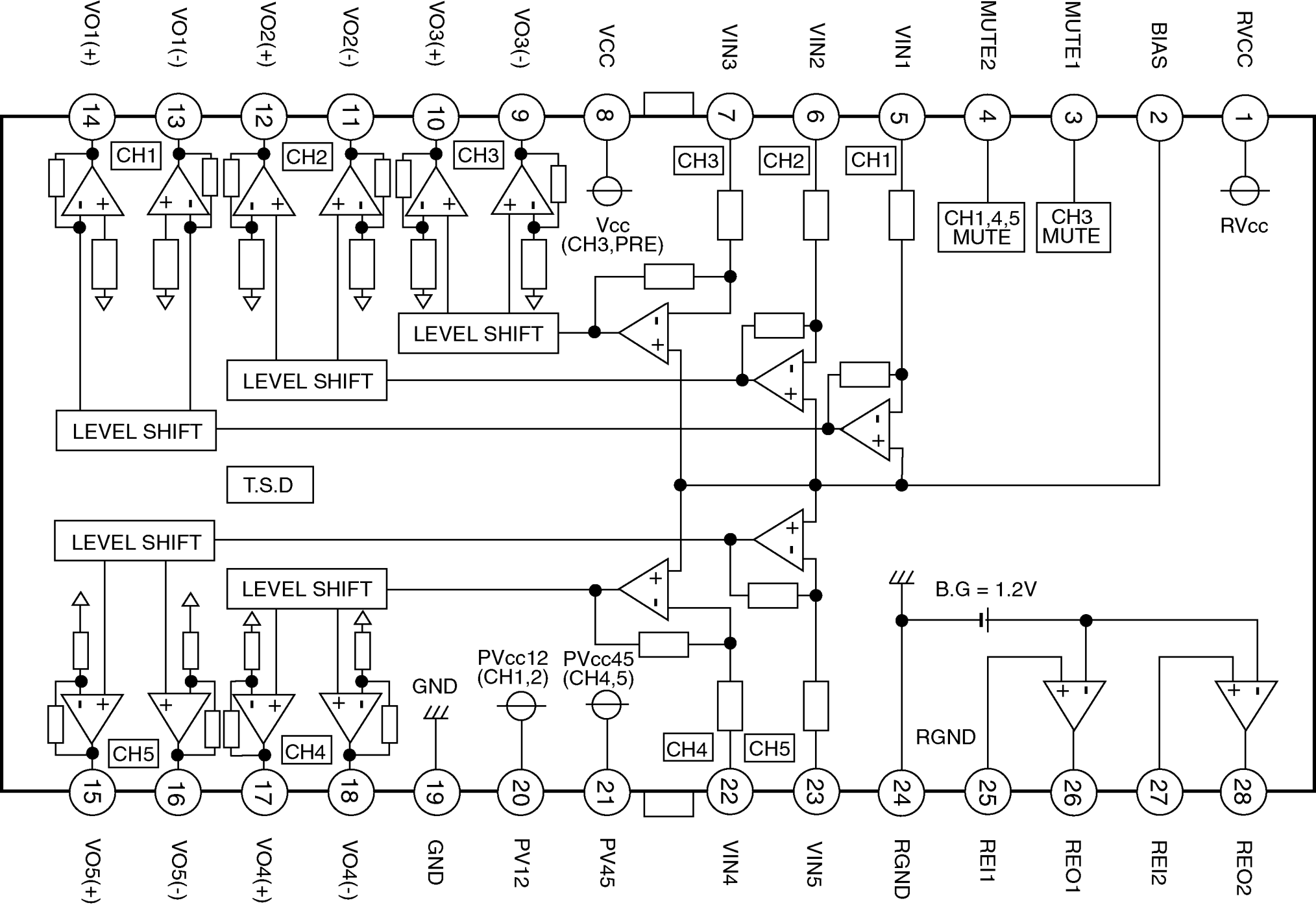
VO1(+)
VO1(-)
VO2(+)
VO2(-)
VO3(+)
VO3(-)
VCC
VIN3
VIN2
VIN1
MUTE2
MUTE1
BIAS
RVCC
14
13
12
11
10
9
8
7
6
5
4
3
2
1
CH1
CH2
CH3
CH3
CH2
CH1
Vcc
(CH3,PRE)
CH1,4,5
MUTE
CH3
MUTE
RVcc
LEVEL SHIFT
LEVEL SHIFT
LEVEL SHIFT
T.S.D
LEVEL SHIFT
LEVEL SHIFT
B.G = 1.2V
PVcc12
(CH1,2)
PVcc45
(CH4,5)
GND
CH5
CH4
CH4
CH5
RGND
15
16
17
18
19
20
21
22
23
24
25
26
27
28
VO5(+)
VO5(-)
VO4(+)
VO4(-)
GND
PV12
PV45
VIN4
VIN5
RGND
REI1
REO1
REI2
REO2

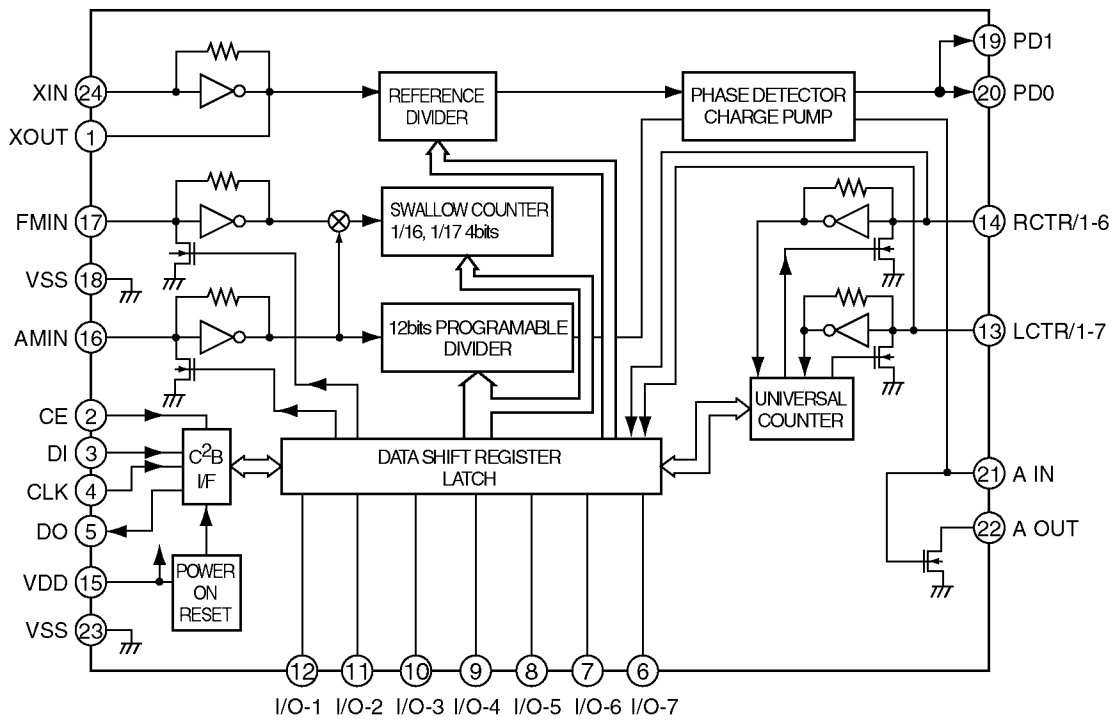
XIN
24
XOUT
1
FMIN
17
VSS
18
AMIN
16
CE
2
DI
3
CLK
4
DO
5
VDD
15
VSS
23
REFERENCE DIVIDER
PHASE DETECTOR CHARGE PUMP
SWALLOW COUNTER 1/16, 1/17 4bits
12bits PROGRAMABLE DIVIDER
C2B I/F
DATA SHIFT REGISTER LATCH
POWER ON RESET
UNIVERSAL COUNTER
19
PD1
20
PD0
14
RCTR/1-6
13
LCTR/1-7
21
A IN
22
A OUT
12
11
10
9
8
7
6
I/O-1
I/O-2
I/O-3
I/O-4
I/O-5
I/O-6
I/O-7

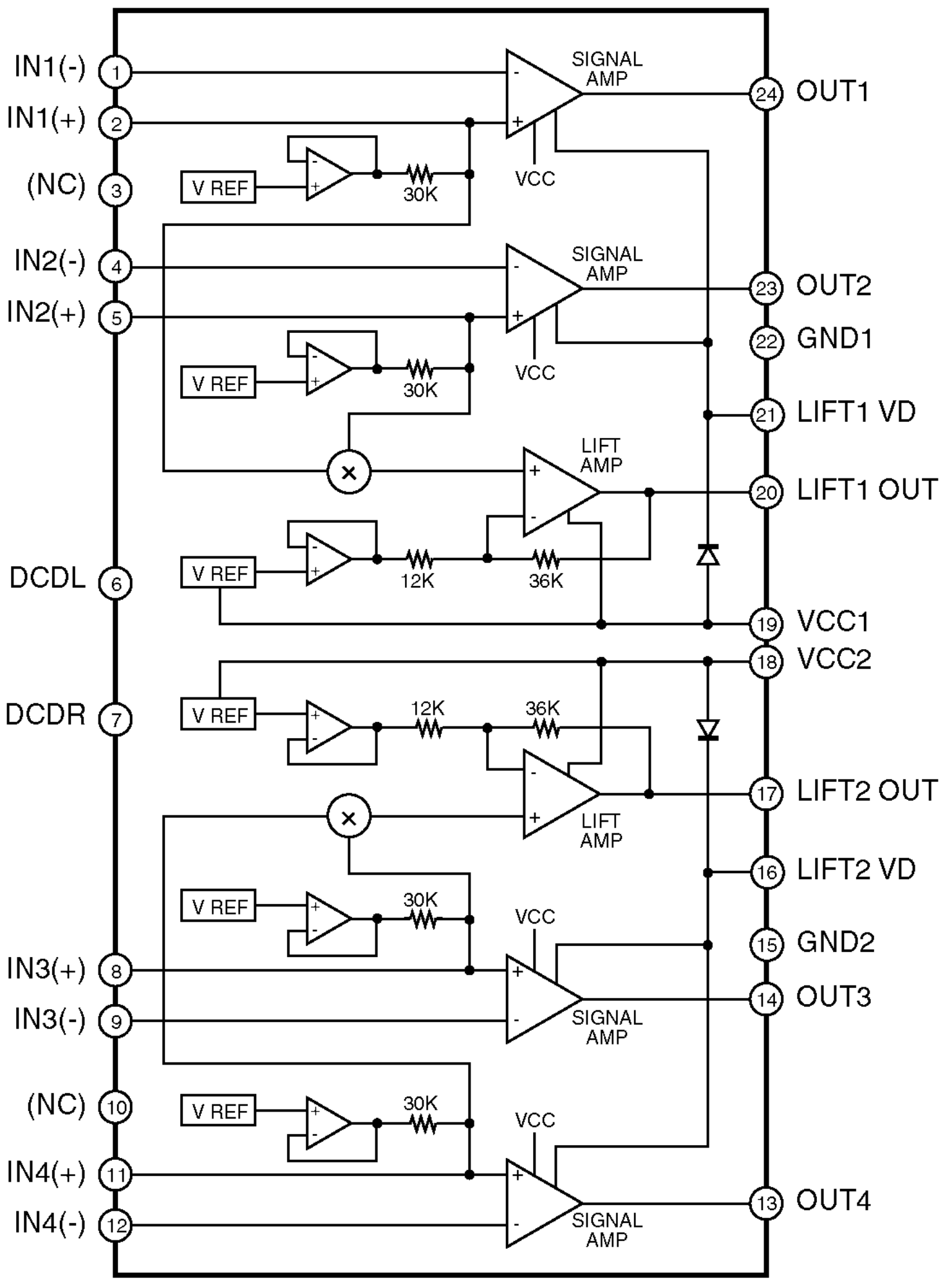
IN1(-)
1
IN1(+)
2
(NC)
3
IN2(-)
4
IN2(+)
5
DCDL
6
DCDR
7
IN3(+)
8
IN3(-)
9
(NC)
10
IN4(+)
11
IN4(-)
12
SIGNAL AMP
VCC
V REF
30K
LIFT AMP
12K
36K
24
OUT1
23
OUT2
22
GND1
21
LIFT1 VD
20
LIFT1 OUT
19
VCC1
18
VCC2
17
LIFT2 OUT
16
LIFT2 VD
15
GND2
14
OUT3
13
OUT4

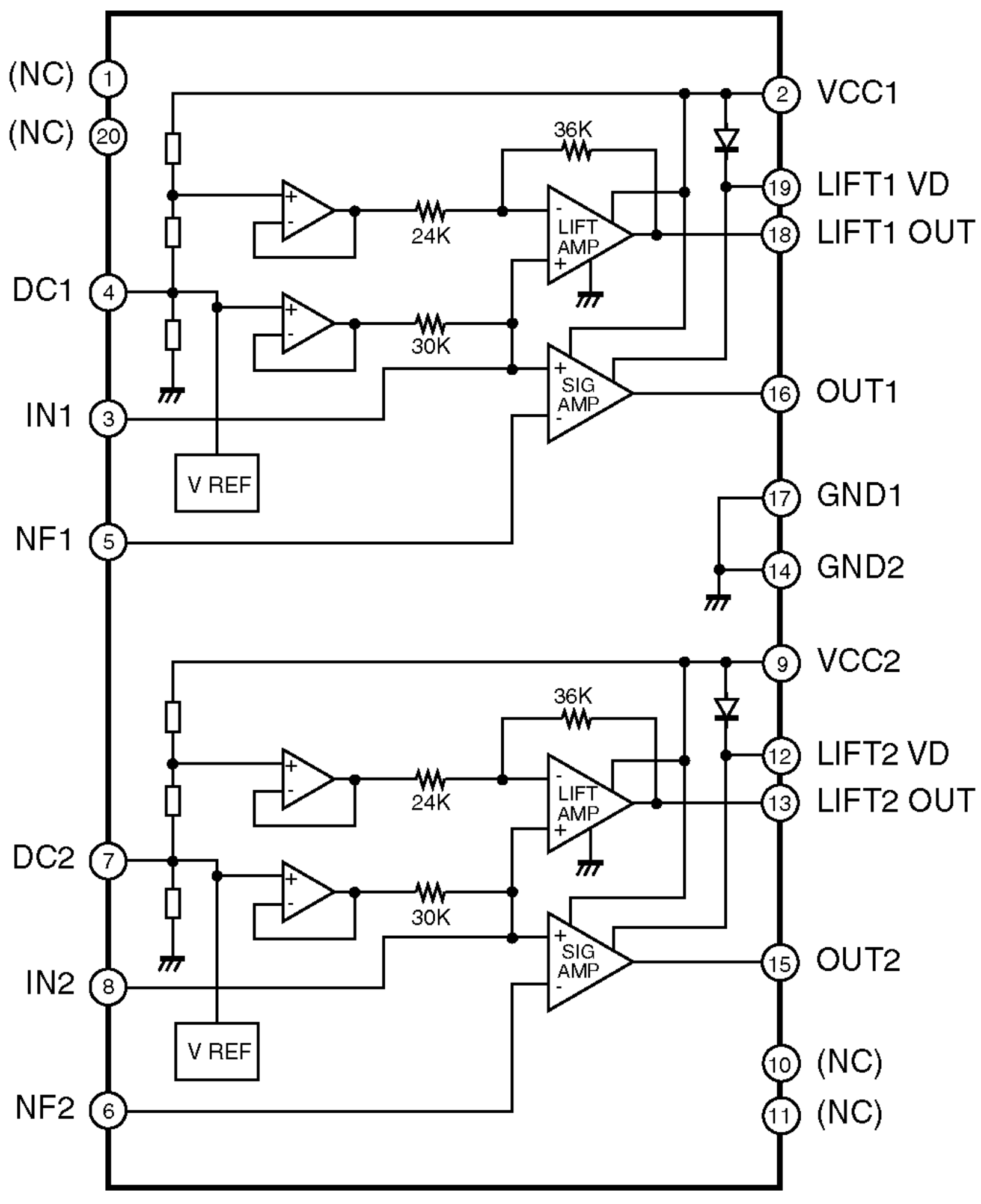
(NC) 1
(NC) 20
DC1 4
IN1 3
NF1 5
DC2 7
IN2 8
NF2 6
2 VCC1
19 LIFT1 VD
18 LIFT1 OUT
16 OUT1
17 GND1
14 GND2
9 VCC2
12 LIFT2 VD
13 LIFT2 OUT
15 OUT2
10 (NC)
11 (NC)
36K
24K
30K
LIFT AMP
SIG AMP
V REF
36K
24K
30K
LIFT AMP
SIG AMP
V REF

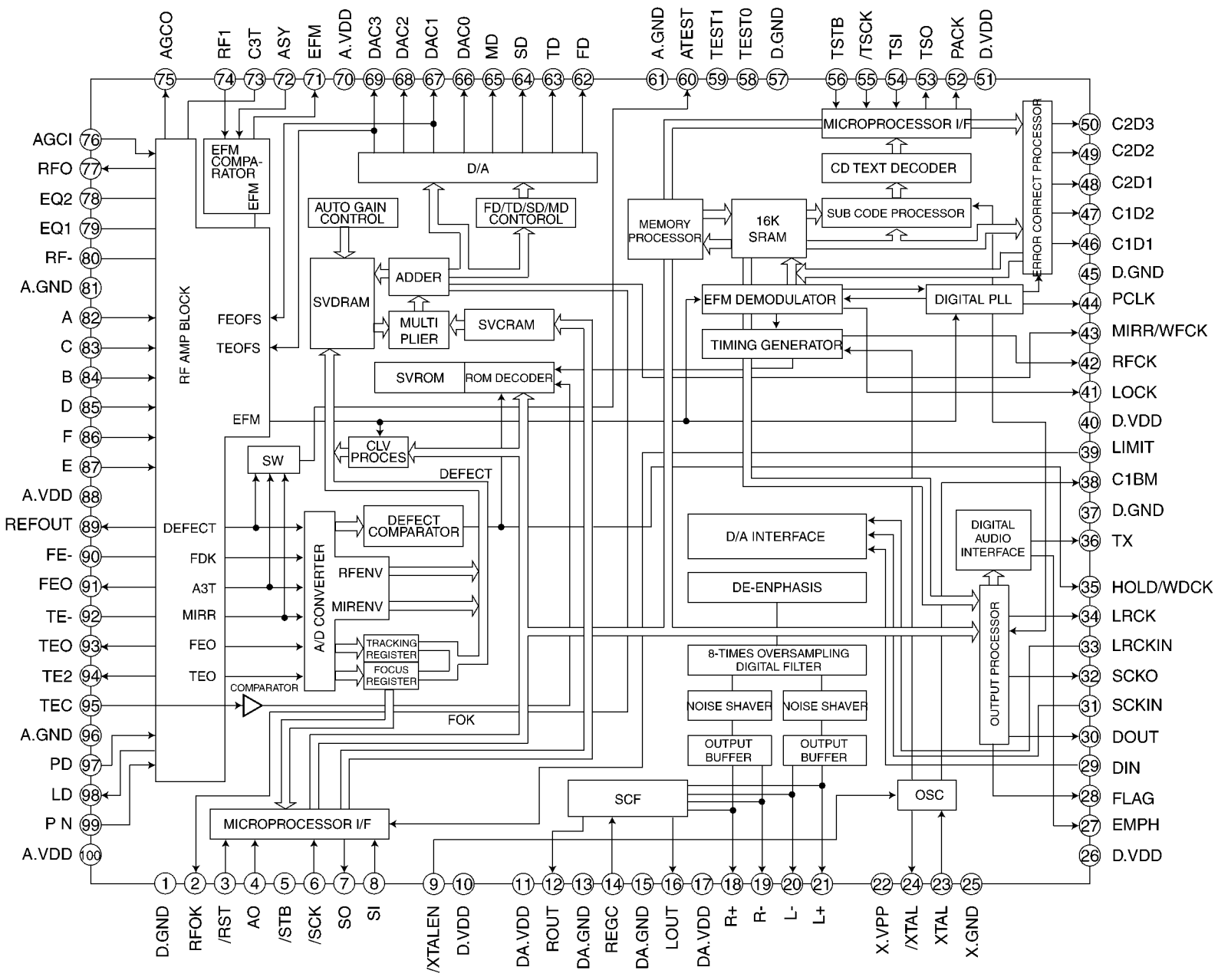
AGCO 75
RF1 74
C3T 73
ASY 72
EFM 71
A.VDD 70
DAC3 69
DAC2 68
DAC1 67
DAC0 66
MD 65
SD 64
TD 63
FD 62
A.GND 61
ATEST 60
TEST1 59
TEST0 58
D.GND 57
TSTB 56
/TSCK 55
TSI 54
TSO 53
PACK 52
D.VDD 51
AGCI 76
RFO 77
EQ2 78
EQ1 79
RF- 80
A.GND 81
A 82
C 83
B 84
D 85
F 86
E 87
A.VDD 88
REFOUT 89
FE- 90
FEO 91
TE- 92
TEO 93
TE2 94
TEC 95
A.GND 96
PD 97
LD 98
P N 99
A.VDD 100
C2D3 50
C2D2 49
C2D1 48
C1D2 47
C1D1 46
D.GND 45
PCLK 44
MIRR/WFCK 43
RFCK 42
LOCK 41
D.VDD 40
LIMIT 39
C1BM 38
D.GND 37
TX 36
HOLD/WDCK 35
LRCK 34
LRCKIN 33
SCKO 32
SCKIN 31
DOUT 30
DIN 29
FLAG 28
EMPH 27
D.VDD 26
D.GND 1
RFOK 2
/RST 3
AO 4
/STB 5
/SCK 6
SO 7
SI 8
/XTALEN 9
D.VDD 10
DA.VDD 11
ROUT 12
DA.GND 13
REGC 14
DA.GND 15
LOUT 16
DA.VDD 17
R+ 18
R- 19
L- 20
L+ 21
X.VPP 22
/XTAL 24
XTAL 23
X.GND 25
RF AMP BLOCK
EFM COMPA-RATOR
EFM
FEOFS
TEOFS
EFM
DEFECT
FDK
A3T
MIRR
FEO
TEO
COMPARATOR
FOK
D/A
AUTO GAIN CONTROL
FD/TD/SD/MD CONTOROL
SVDRAM
ADDER
MULTI PLIER
SVCRAM
SVROM
ROM DECODER
SW
CLV PROCES
DEFECT
DEFECT COMPARATOR
A/D CONVERTER
RFENV
MIRENV
TRACKING REGISTER
FOCUS REGISTER
MICROPROCESSOR I/F
MEMORY PROCESSOR
16K SRAM
MICROPROCESSOR I/F
CD TEXT DECODER
SUB CODE PROCESSOR
ERROR CORRECT PROCESSOR
EFM DEMODULATOR
DIGITAL PLL
TIMING GENERATOR
D/A INTERFACE
DE-ENPHASIS
DIGITAL AUDIO INTERFACE
OUTPUT PROCESSOR
8-TIMES OVERSAMPLING DIGITAL FILTER
NOISE SHAVER
NOISE SHAVER
OUTPUT BUFFER
OUTPUT BUFFER
SCF
OSC
MICROPROCESSOR I/F

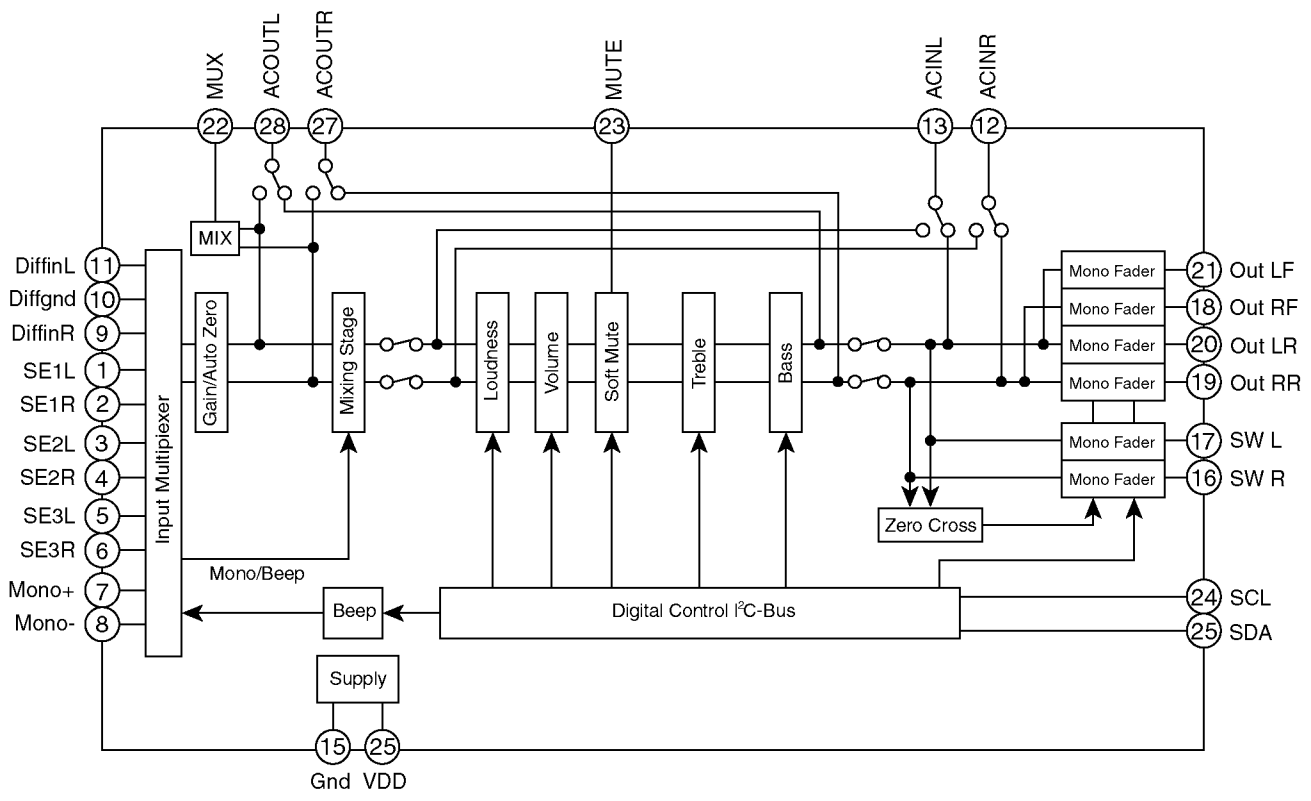
MUX
ACOUTL
ACOUTR
MUTE
ACINL
ACINR
22
28
27
23
13
12
MIX
DiffinL
Diffgnd
DiffinR
SE1L
SE1R
SE2L
SE2R
SE3L
SE3R
Mono+
Mono-
11
10
9
1
2
3
4
5
6
7
8
Input Multipiexer
Gain/Auto Zero
Mixing Stage
Loudness
Volume
Soft Mute
Treble
Bass
Mono Fader
Mono Fader
Mono Fader
Mono Fader
Mono Fader
Mono Fader
21
18
20
19
17
16
Out LF
Out RF
Out LR
Out RR
SW L
SW R
Zero Cross
Mono/Beep
Beep
Digital Control I²C-Bus
24
25
SCL
SDA
Supply
15
25
Gnd
VDD

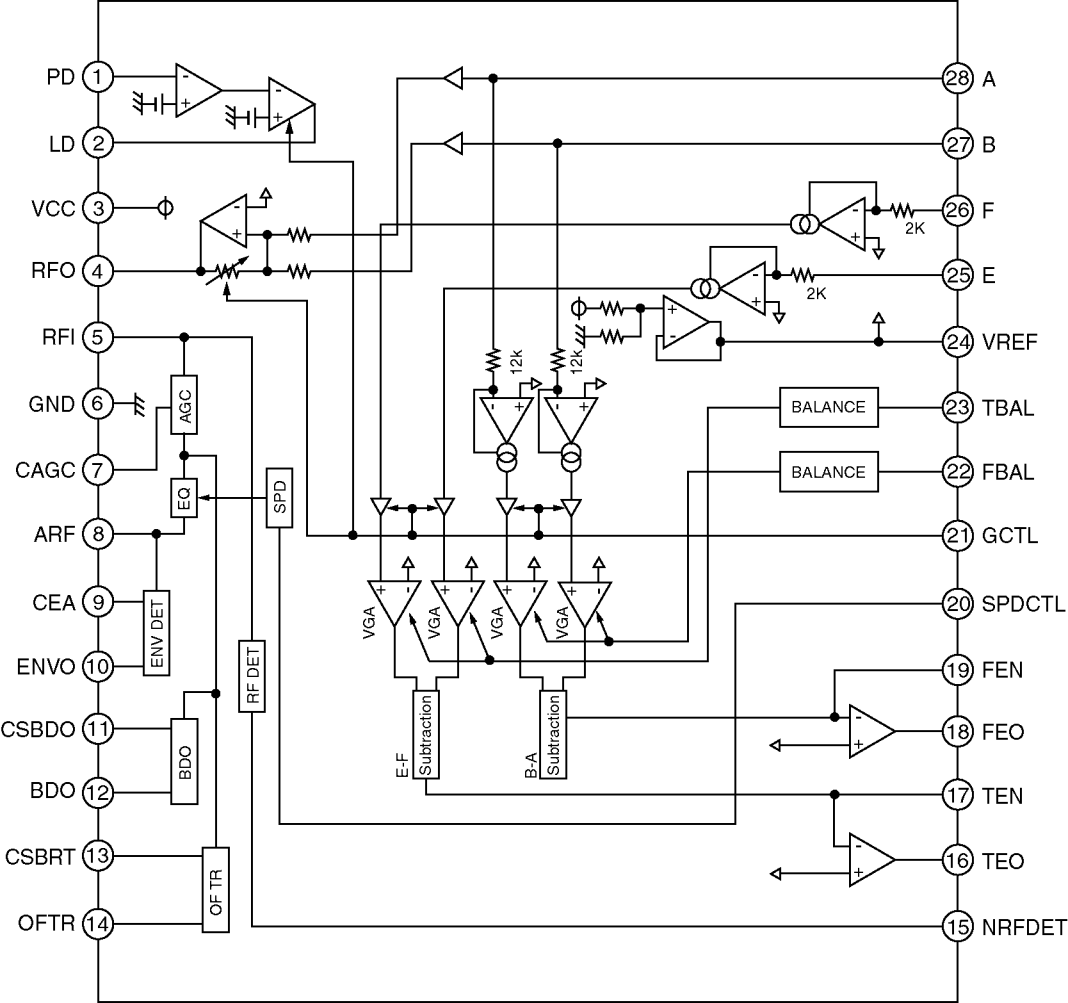
PD 1
LD 2
VCC 3
RFO 4
RFI 5
GND 6
CAGC 7
ARF 8
CEA 9
ENVO 10
CSBDO 11
BDO 12
CSBRT 13
OFTR 14
28 A
27 B
26 F
25 E
24 VREF
23 TBAL
22 FBAL
21 GCTL
20 SPDCTL
19 FEN
18 FEO
17 TEN
16 TEO
15 NRFDET
AGC
EQ
SPD
ENV DET
RF DET
BDO
OF TR
12k
12k
2K
2K
BALANCE
BALANCE
VGA
VGA
VGA
VGA
E-F Subtraction
B-A Subtraction

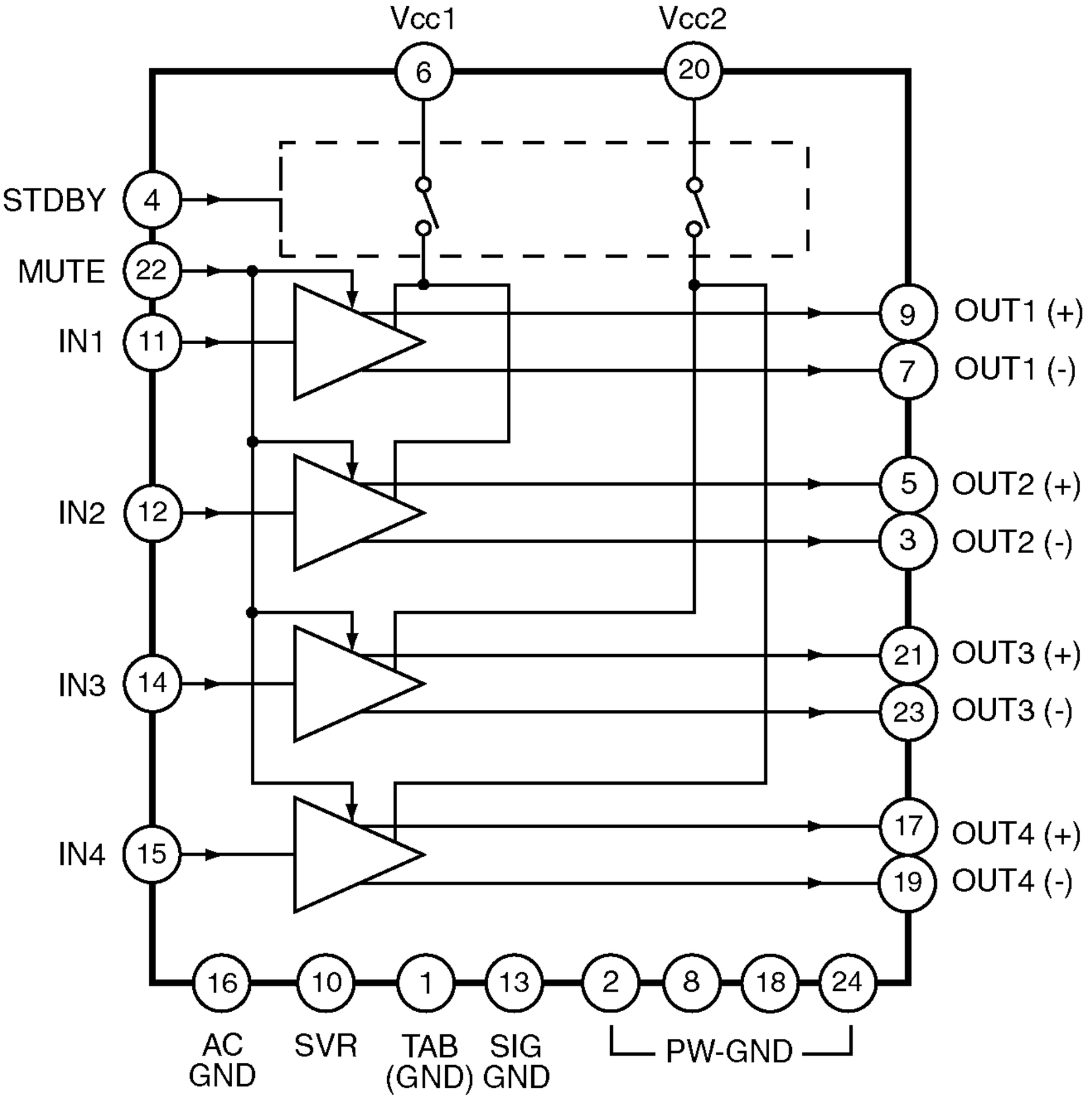
Vcc1
Vcc2
6
20
STDBY
4
MUTE
22
IN1
11
IN2
12
IN3
14
IN4
15
9
OUT1 (+)
7
OUT1 (-)
5
OUT2 (+)
3
OUT2 (-)
21
OUT3 (+)
23
OUT3 (-)
17
OUT4 (+)
19
OUT4 (-)
16
10
1
13
2
8
18
24
AC GND
SVR
TAB (GND)
SIG GND
PW-GND

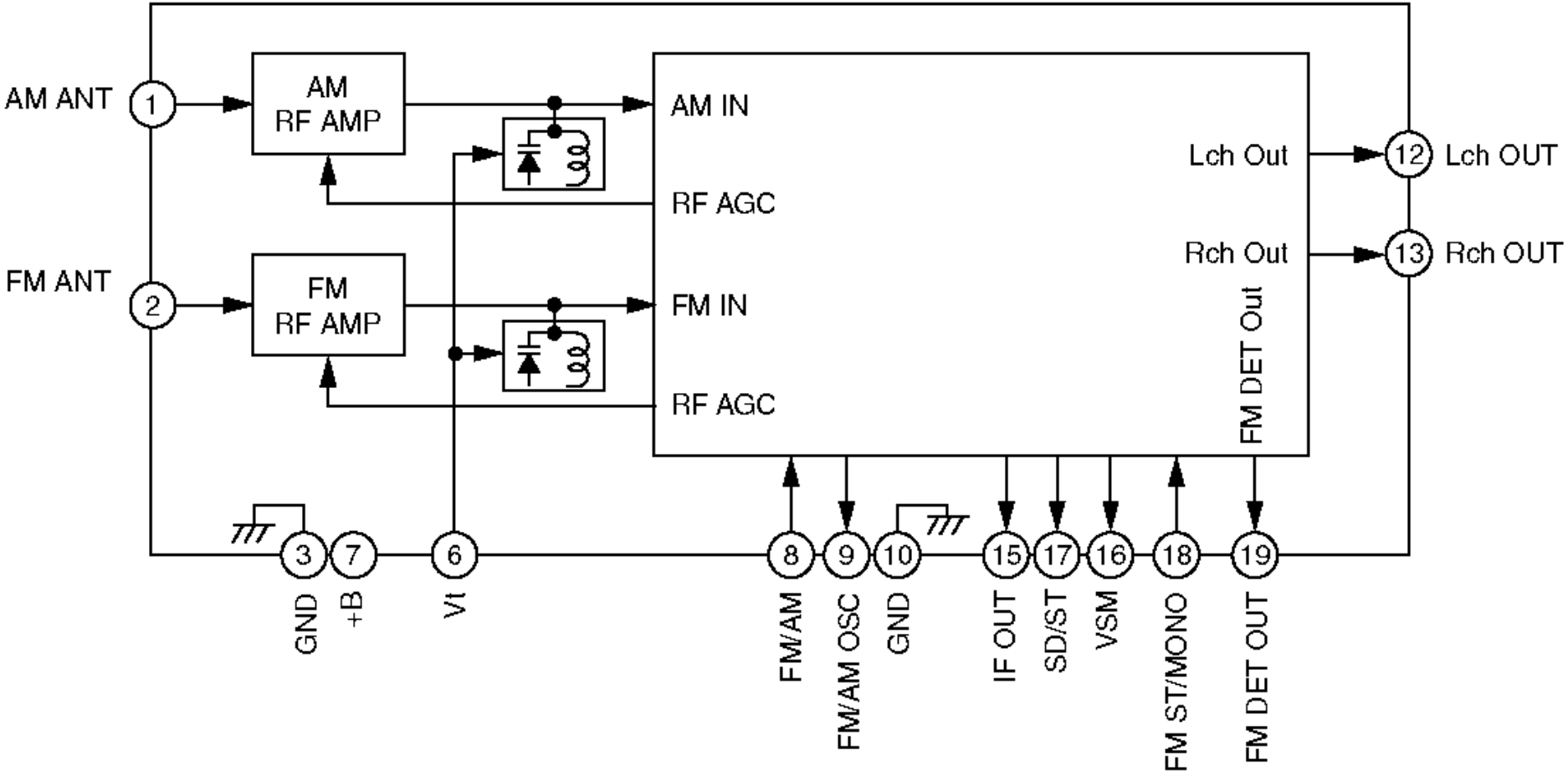
AM ANT
1
AM
RF AMP
AM IN
RF AGC
FM ANT
2
FM
RF AMP
FM IN
RF AGC
Lch Out
Rch Out
FM DET Out
12
Lch OUT
13
Rch OUT
3
7
6
8
9
10
15
17
16
18
19
GND
+B
Vt
FM/AM
FM/AM OSC
GND
IF OUT
SD/ST
VSM
FM ST/MONO
FM DET OUT

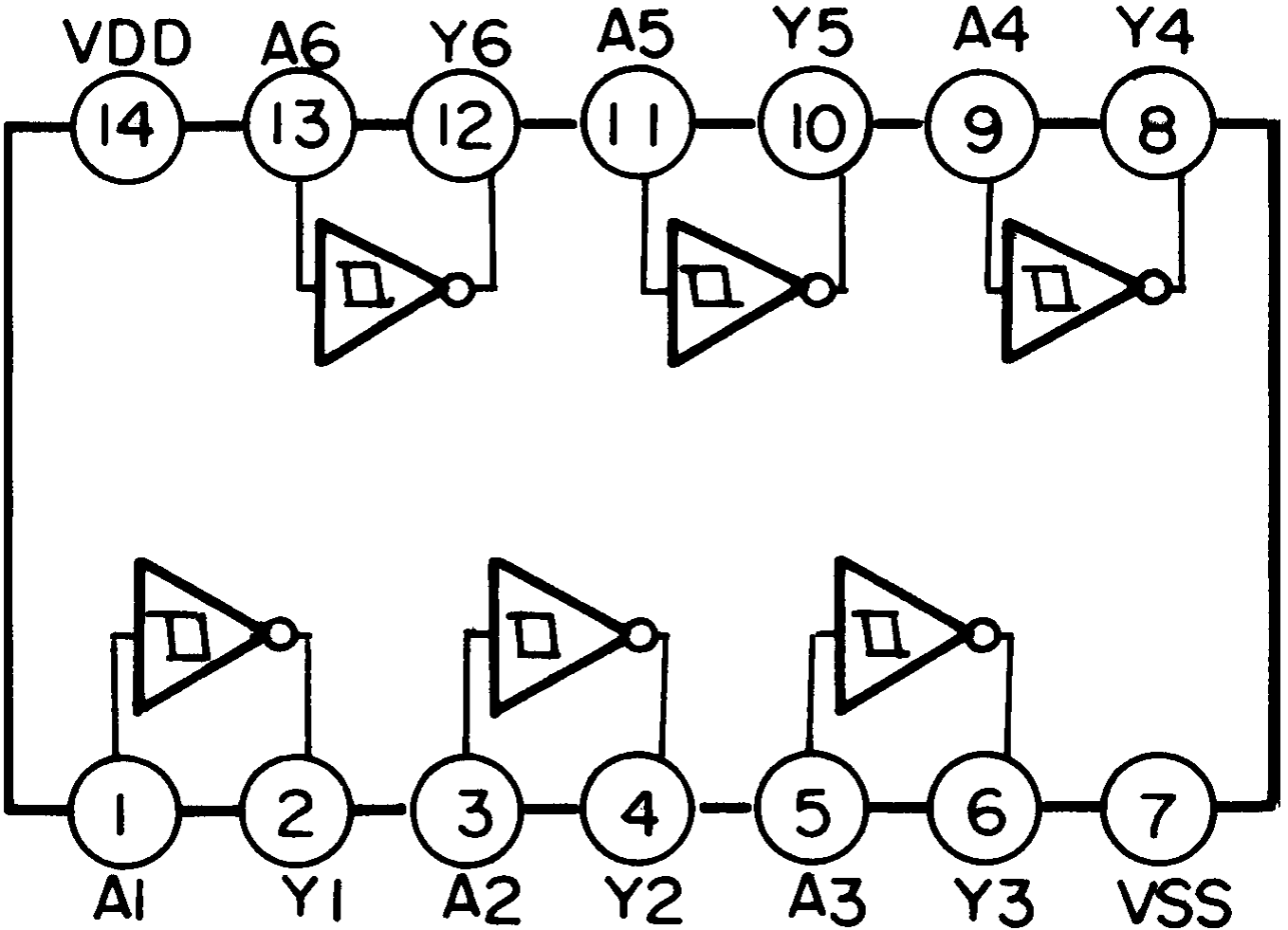
VDD
A6
Y6
A5
Y5
A4
Y4
14
13
12
11
10
9
8
1
2
3
4
5
6
7
A1
Y1
A2
Y2
A3
Y3
VSS

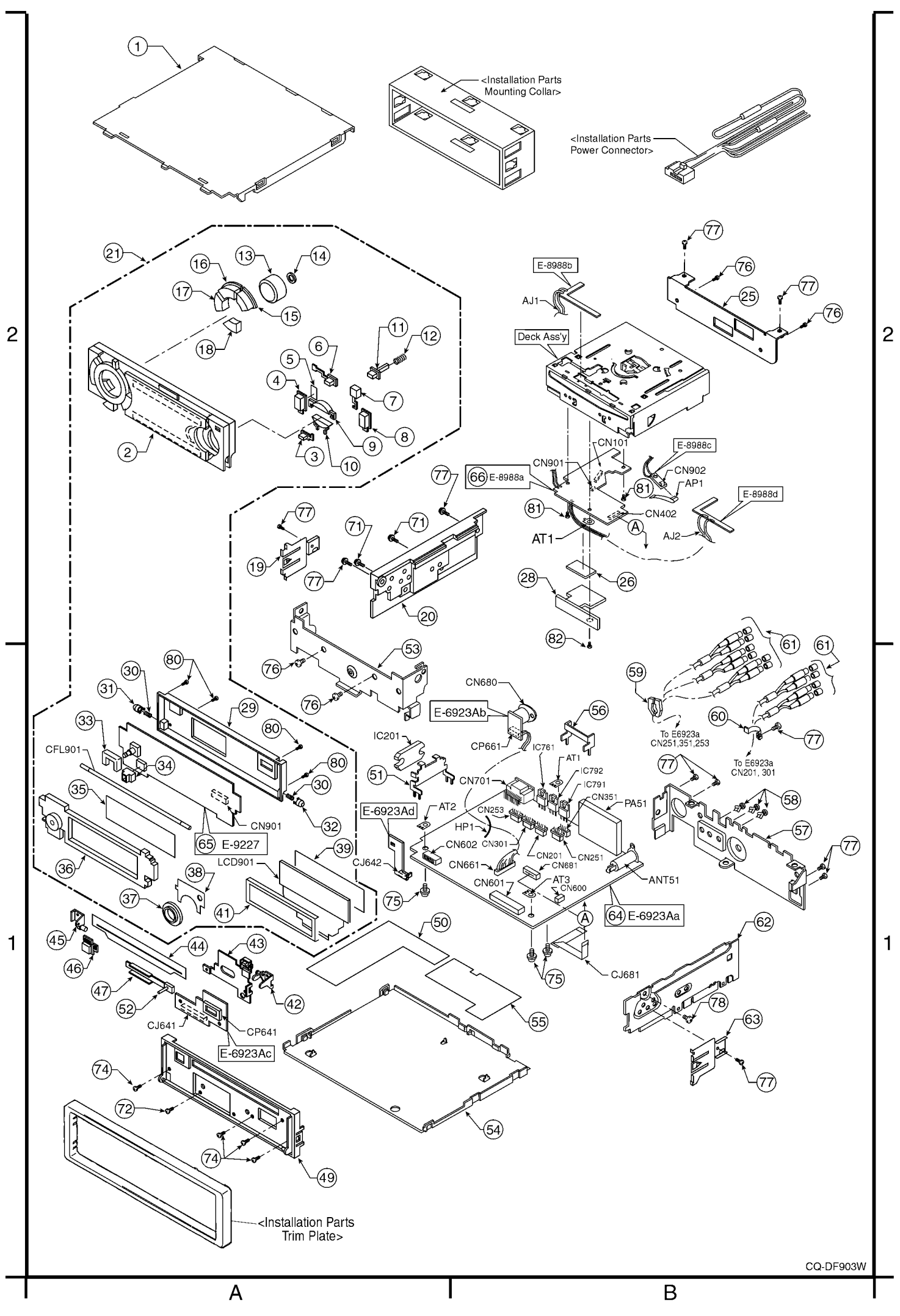
1
<Installation Parts Mounting Collar>
<Installation Parts Power Connector>
21
16
13
14
17
15
18
11
12
6
5
4
7
8
9
3
10
2
77
76
25
E-8988b
AJ1
Deck Ass'y
CN101
E-8988c
CN901
CN902
66 E-8988a
AP1
81
E-8988d
CN402
A
AT1
AJ2
19
71
20
28
26
82
53
61
59
60
To E6923a CN251,351,253
To E6923a CN201, 301
58
57
80
30
31
29
33
CFL901
34
35
32
CN901
65 E-9227
36
39
LCD901
38
37
41
45
46
44
43
42
47
52
CJ641
CP641
E-6923Ac
74
72
49
<Installation Parts Trim Plate>
CN680
E-6923Ab
56
IC201
CP661
IC761
AT1
51
CN701
IC792
IC791
CN351
PA51
E-6923Ad
AT2
CN253
HP1
CN602
CN301
CN201
CN251
CN661
CN681
CJ642
CN601
AT3
CN600
ANT51
75
64 E-6923Aa
50
CJ681
62
78
63
55
54

CQ-DF903W

A B

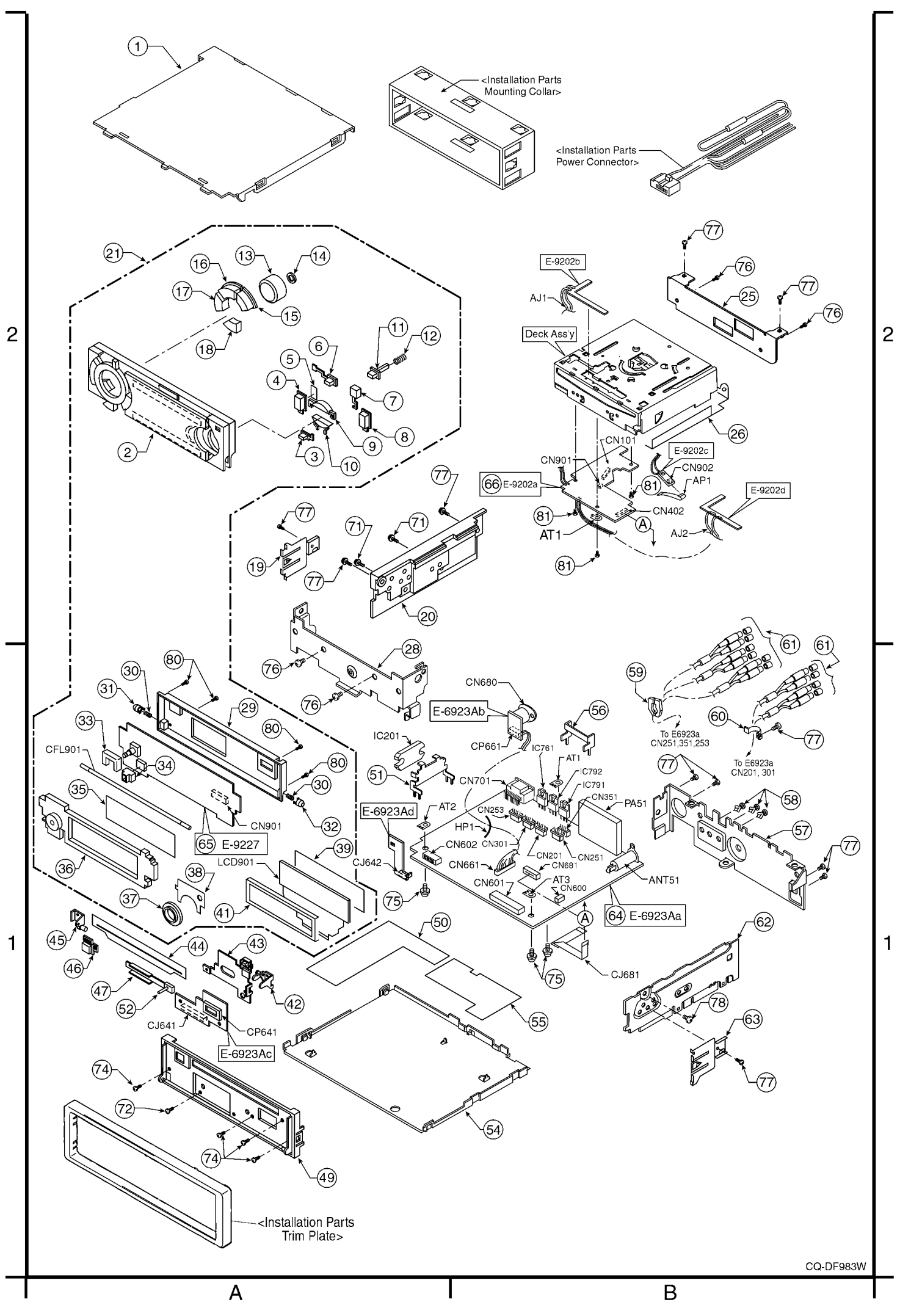
<Installation Parts Mounting Collar>
<Installation Parts Power Connector>
E-9202b
AJ1
Deck Ass'y
CN101
E-9202c
CN902
AP1
CN901
66 E-9202a
CN402
AT1
AJ2
E-9202d
CN680
E-6923Ab
CP661
IC761
AT1
IC792
IC791
CN351
PA51
CN701
IC201
CN253
HP1
CN301
CN602
CN661
CN601
CN201
CN251
CN681
AT3
CN600
ANT51
64 E-6923Aa
CJ681
E-6923Ad
AT2
CJ642
To E6923a CN251,351,253
To E6923a CN201, 301
CFL901
CN901
65 E-9227
LCD901
CJ641
CP641
E-6923Ac
<Installation Parts Trim Plate>

CQ-DF983W

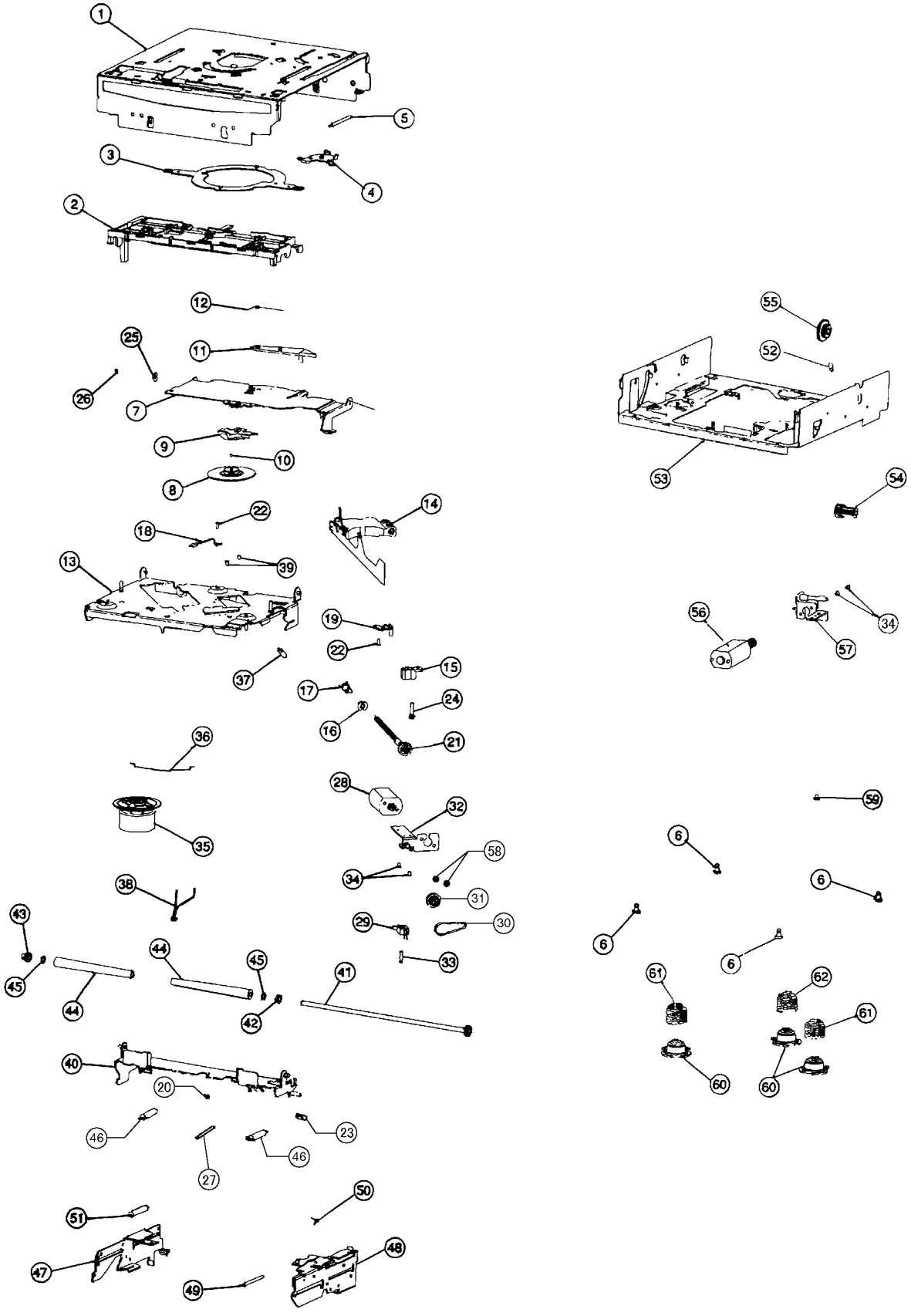
1
5
3
4
2
12
25
11
26
7
9
10
8
22
14
18
39
13
19
22
37
15
17
24
16
21
36
28
32
35
58
34
31
38
29
30
43
33
44
45
45
41
44
42
40
20
46
23
46
27
50
51
47
48
49
55
52
53
54
56
34
57
59
6
6
6
6
61
62
61
60
60

NCD8
'01.12

CAUTION:

This product utilizes a laser diode with the unit turned "on", laser radiation is emitted from the pickup lens.

Laser radiation from the pickup lens is safety level, but be sure the followings:

1. Do not disassemble the optical pickup unit, since radiation from exposed laser diode is dangerous.
2. Do not adjust the variable resistor on the pickup unit. It was already adjusted.
3. Do not look at the focus lens using optical instruments.
4. Recommend not to look at pickup lens for a long time.

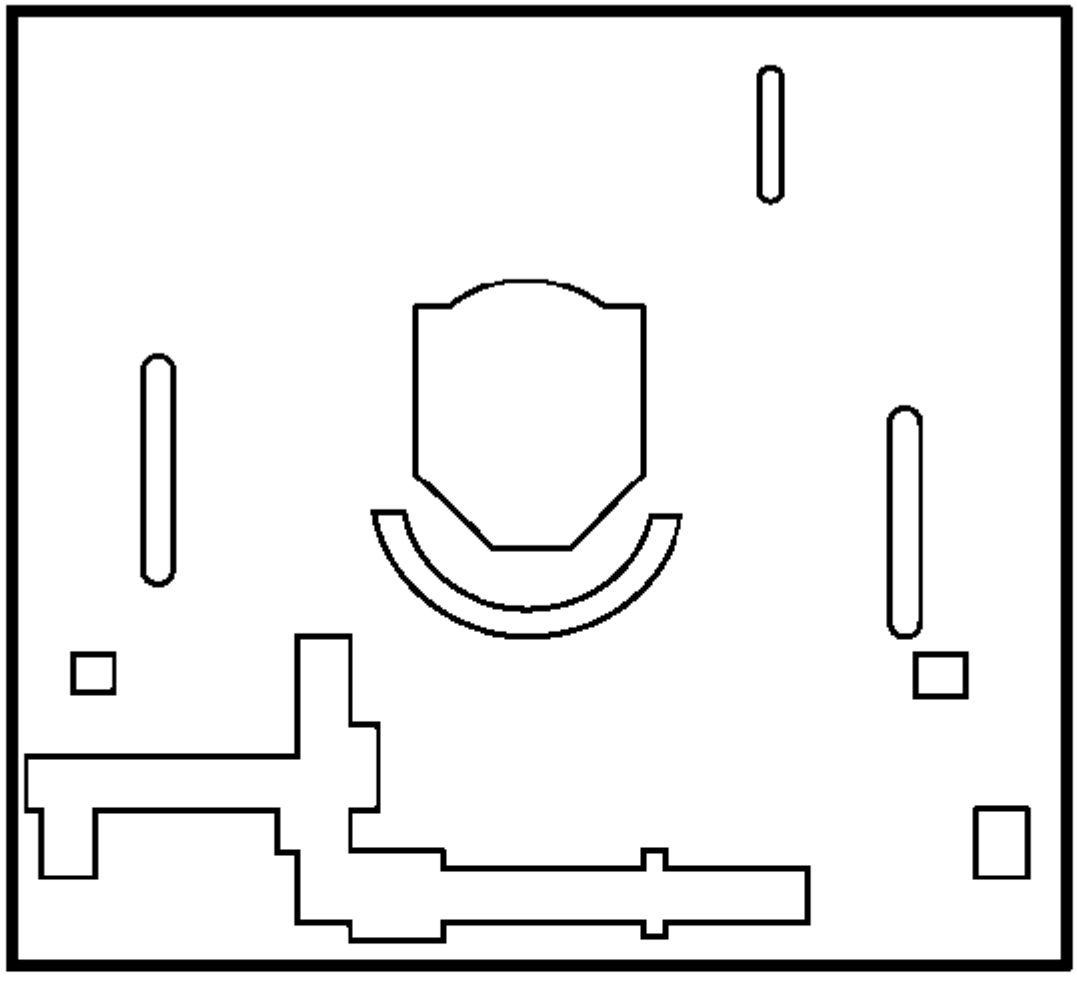

Deck Ass'y (Upper Side)

Caution

This Product utilizes a laser.
Use of controls or adjustments or performance of procedures other than those specified herein may result in hazardous radiation exposure.

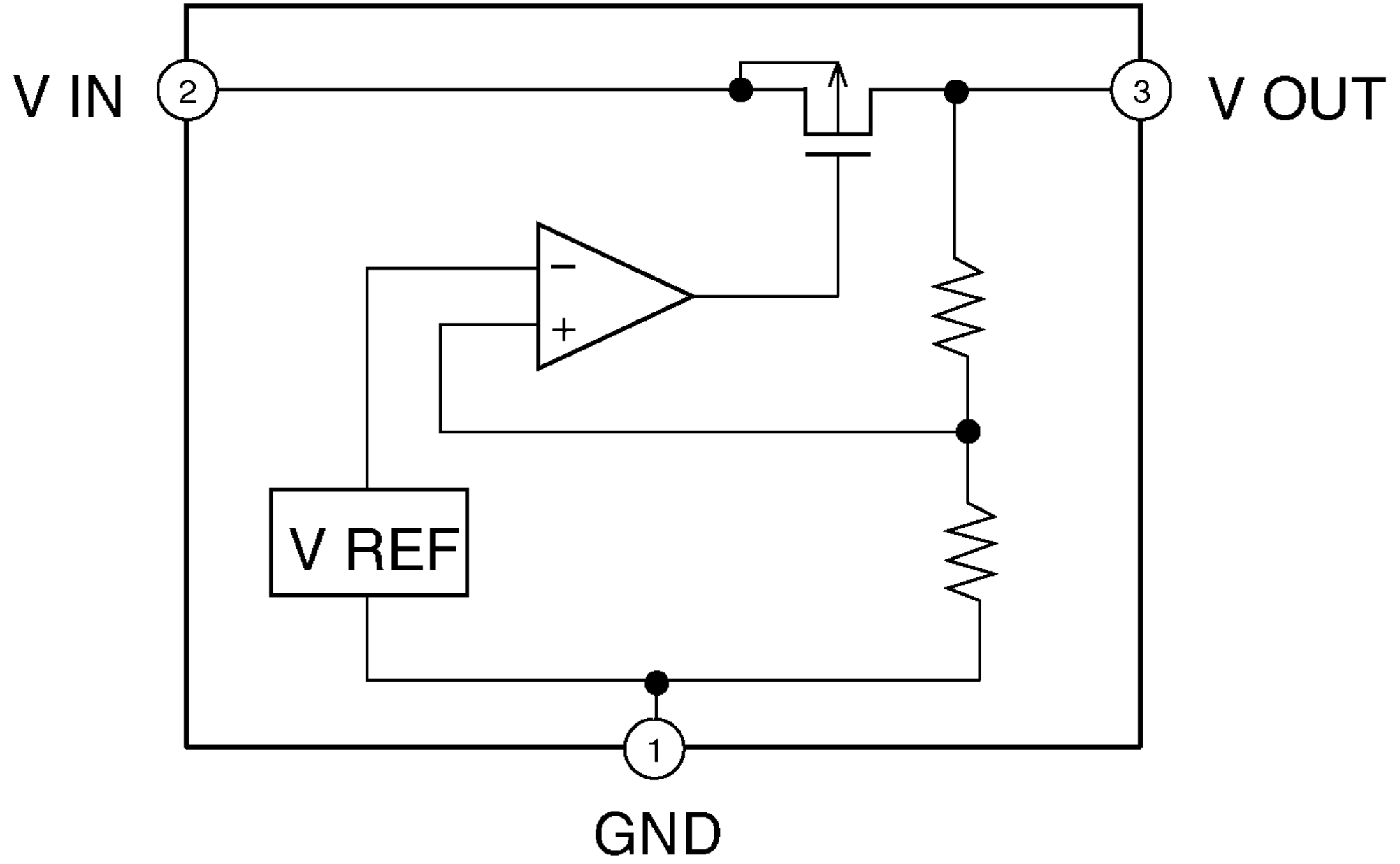
V IN
2
3
V OUT
−
+
V REF
1
GND

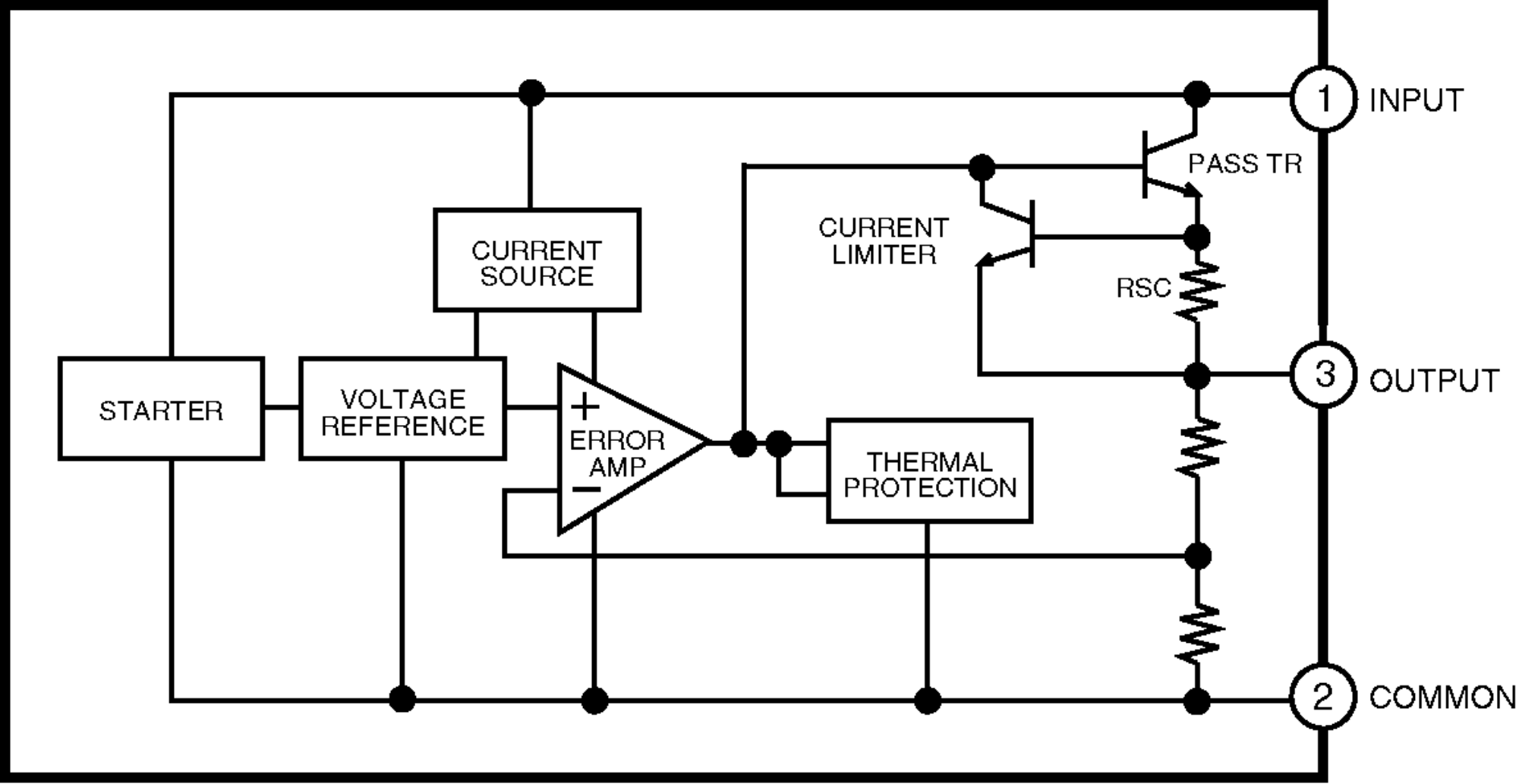
1
INPUT
PASS TR
CURRENT
LIMITER
CURRENT
SOURCE
RSC
3
OUTPUT
STARTER
VOLTAGE
REFERENCE
+
ERROR
AMP
−
THERMAL
PROTECTION
2
COMMON

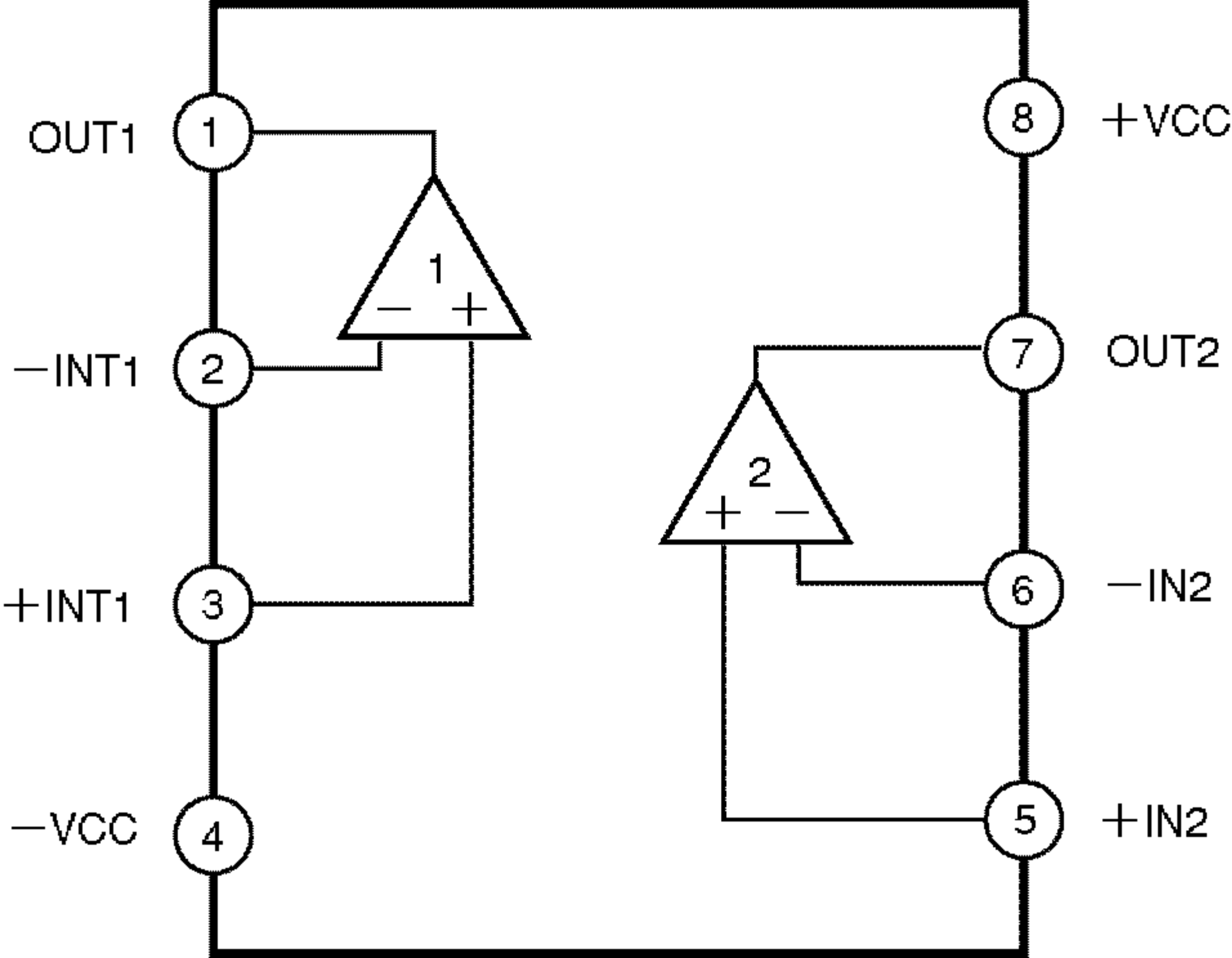
OUT1
1
−INT1
2
+INT1
3
−VCC
4
8
+VCC
7
OUT2
6
−IN2
5
+IN2
1
2

21.5. CD Servo Block [CQ-DF903W]

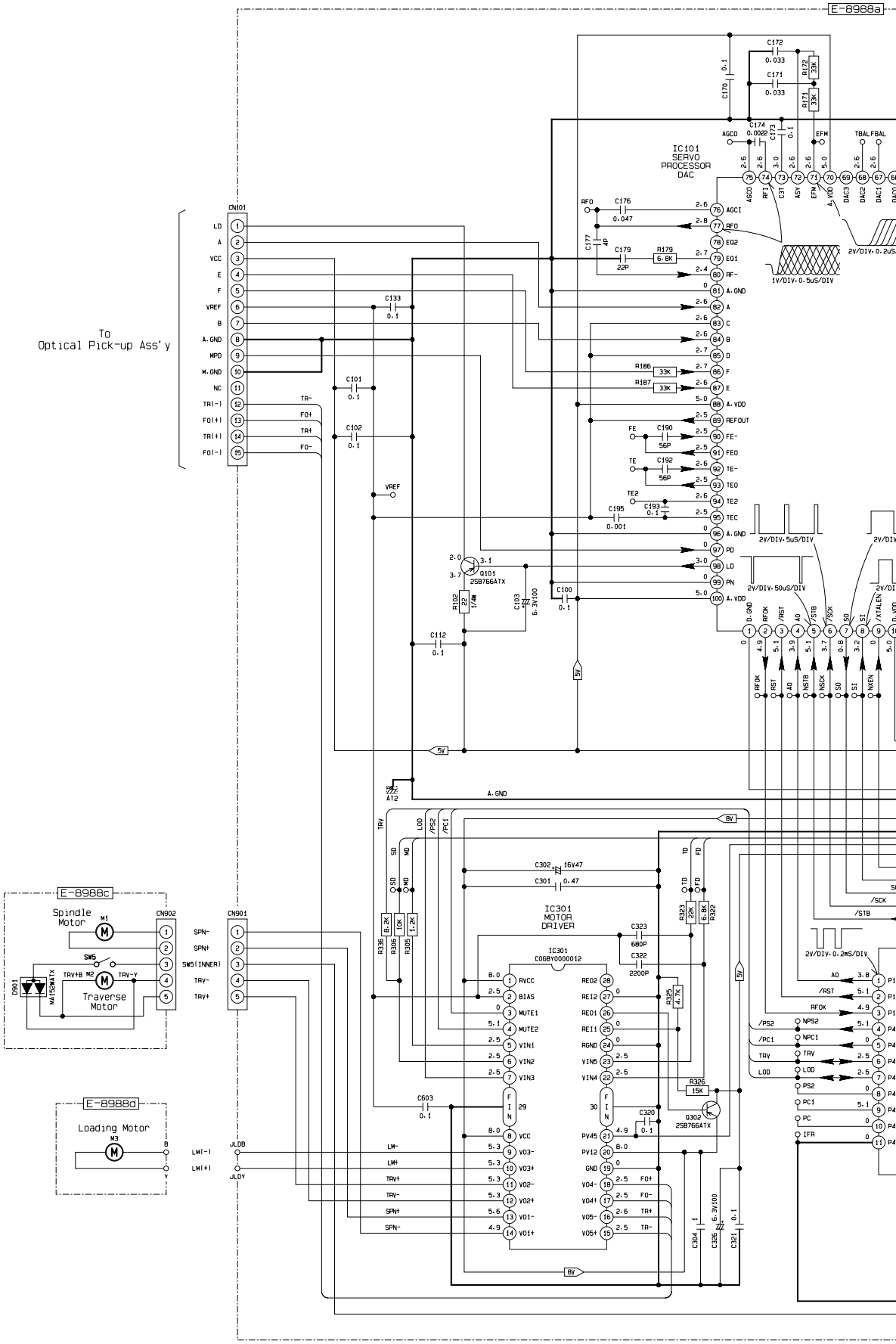

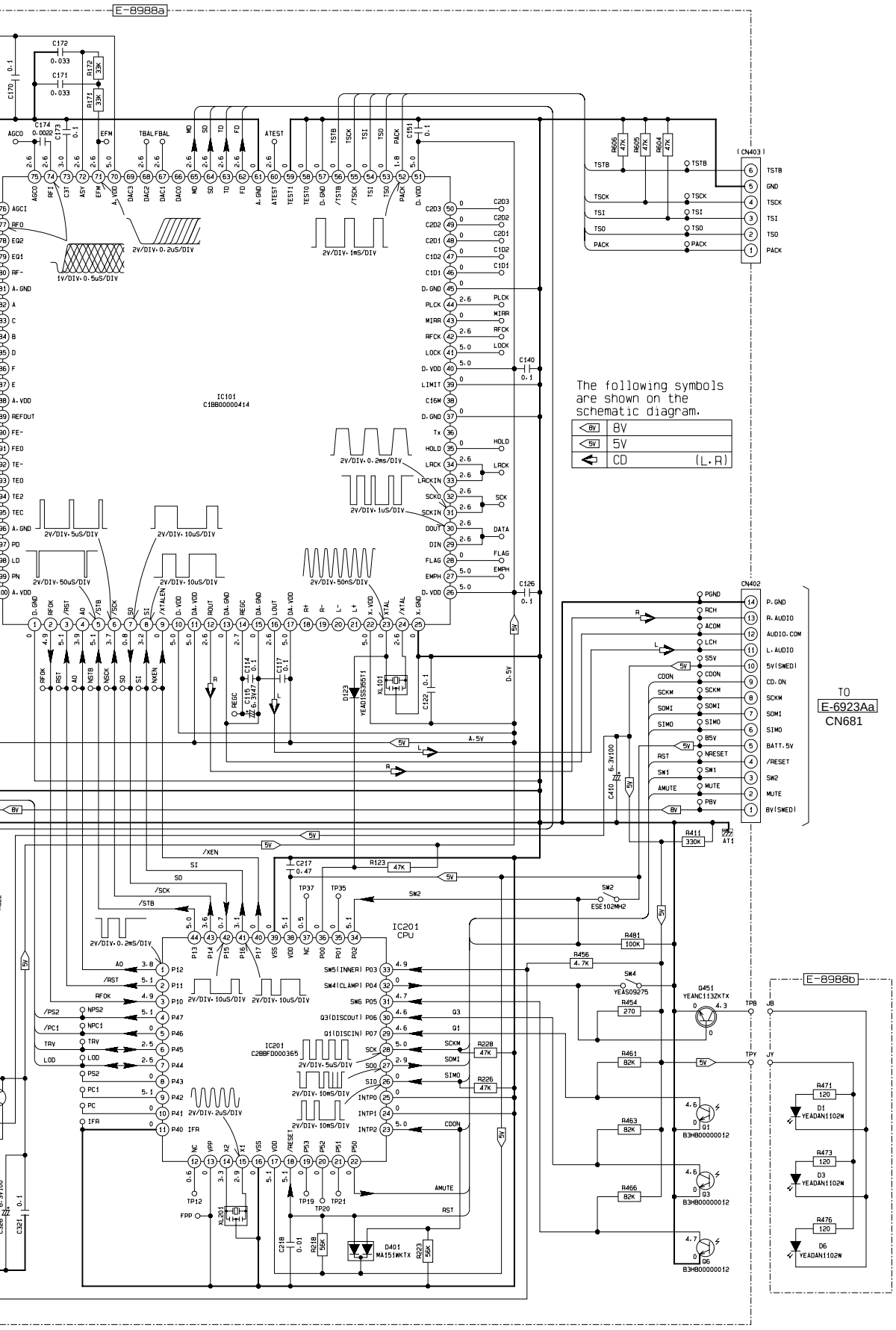

CQ-DF903W CD DECK (NCD8)

Printed in Japan (K) 2003. 3 (Recycled Paper)

21.4. CD Servo Block [CQ-DF983W]

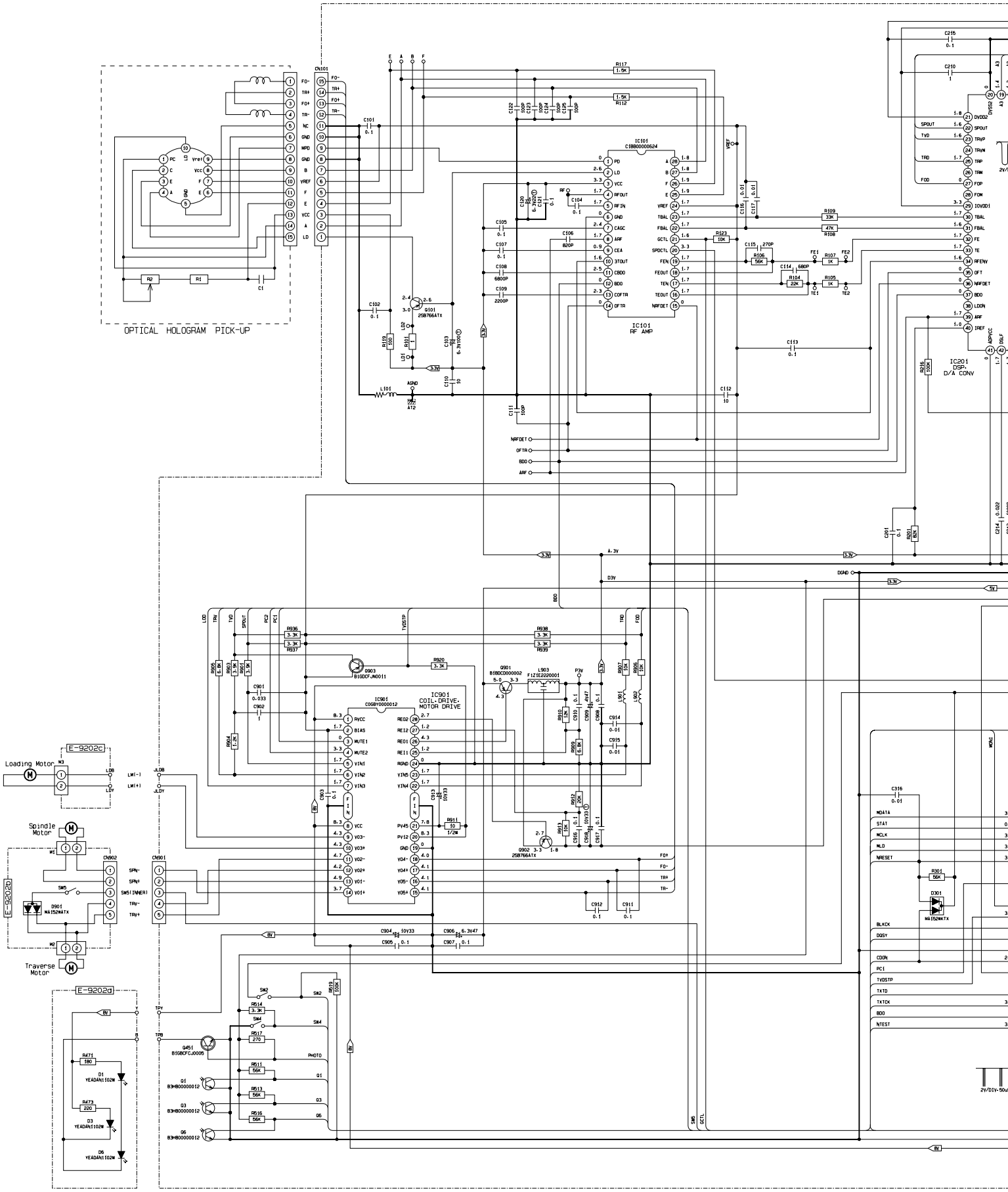

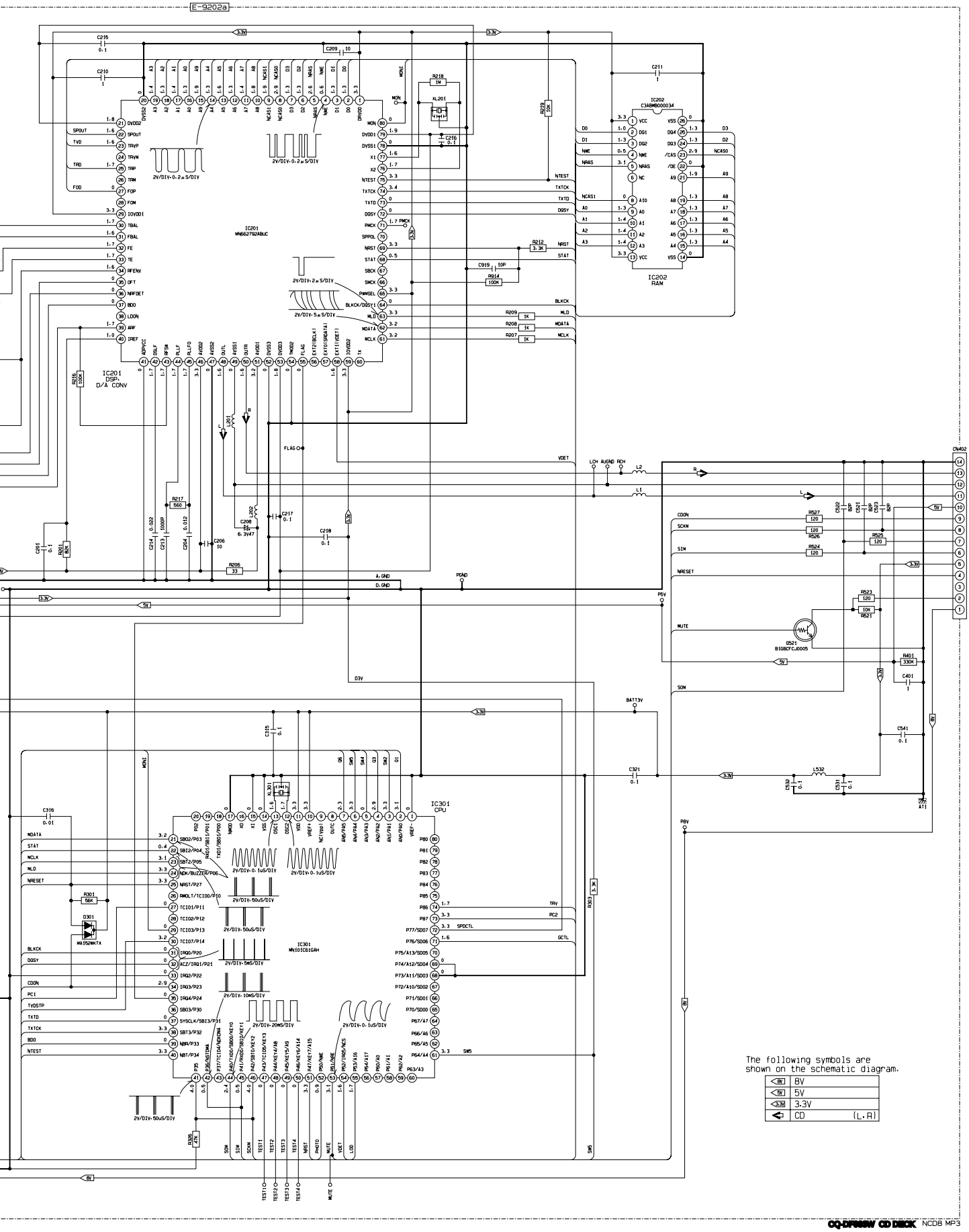
E-9202a
IC201
MN66279248UC
IC201
DSP,
D/A CONV
IC202
C3AB9000034
IC202
RAM
IC301
CPU
IC301
MN101C01GAH
CN402
TO E-6923A@CN681
The following symbols are
shown on the schematic diagram.
8V
5V
3.3V
CD (L,R)

21.2. Main Block [CQ-DF903W]

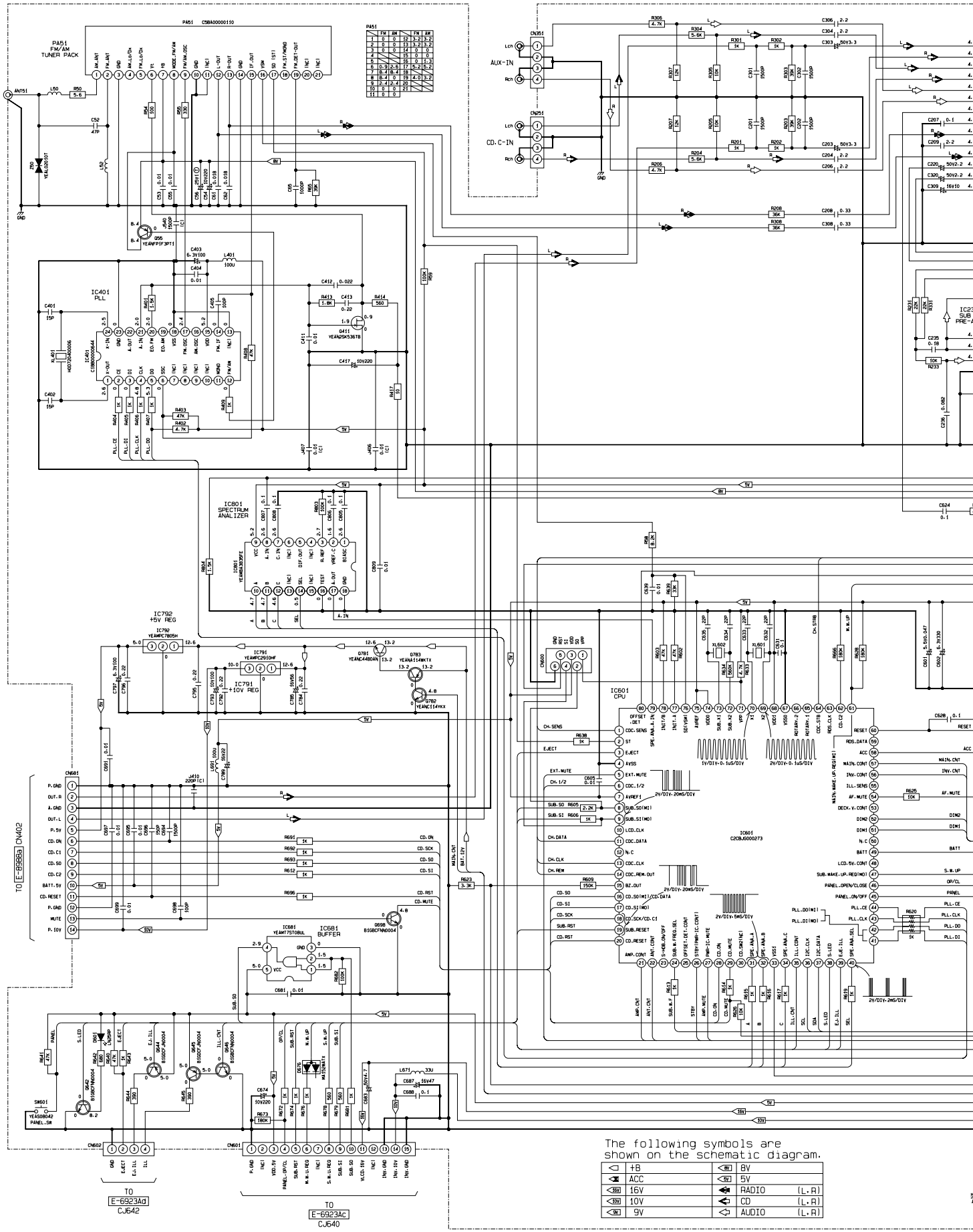

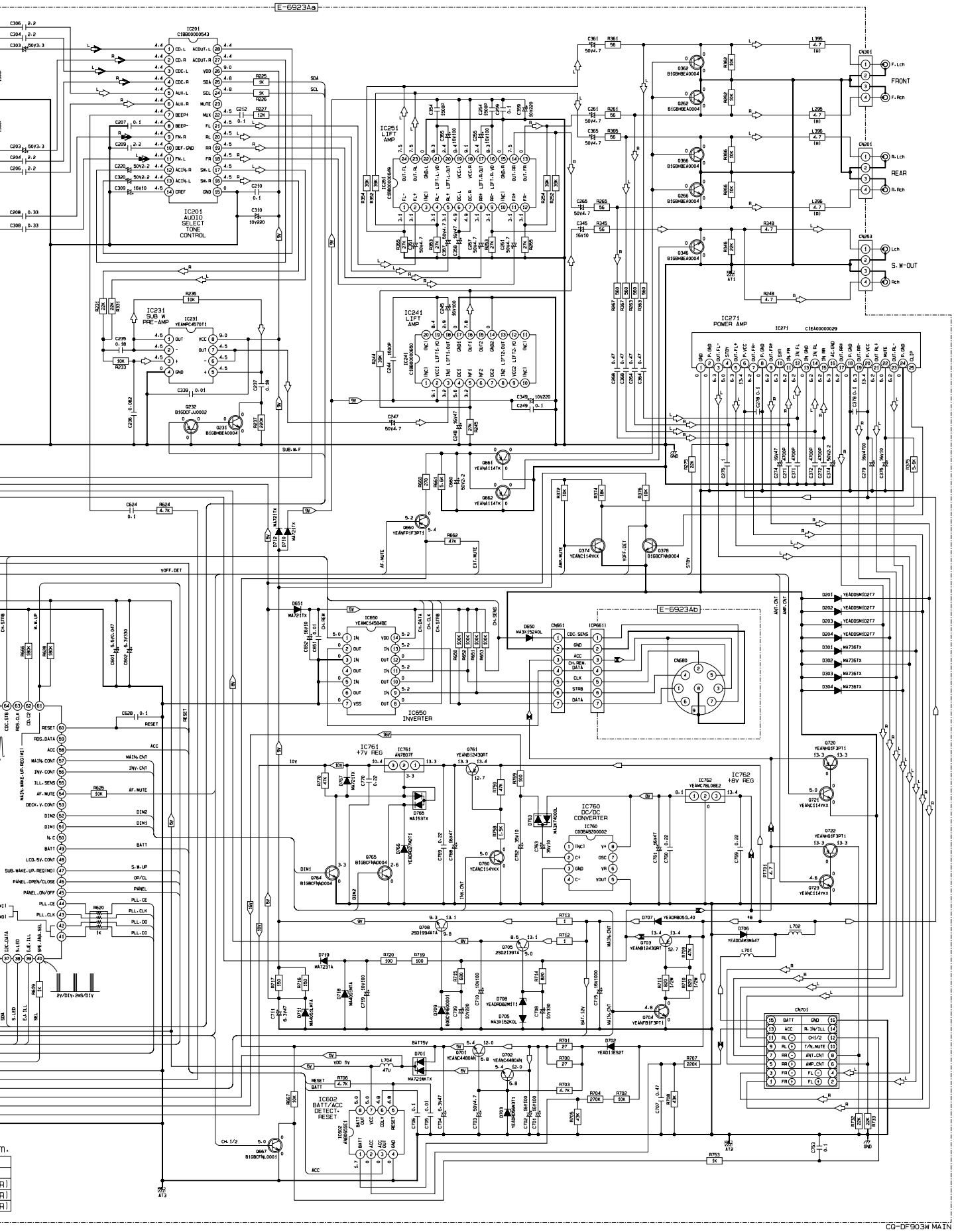
E-6923Aa
E-6923Ab
IC201 AUDIO SELECT TONE CONTROL
IC231 SUB W PRE-AMP
IC251 L.FT AMP
IC241 L.FT AMP
IC271 POWER AMP
IC650 INVERTER
IC761 +7V REG
IC762 +8V REG
IC760 DC/DC CONVERTER
IC602 BATT/ACC DETECT-RESET
FRONT
REAR
S.W-OUT
CQ-DF903W MAIN

21 SCHEMATIC DIAGRAM-2

21.1. Main Block [CQ-DF983W]

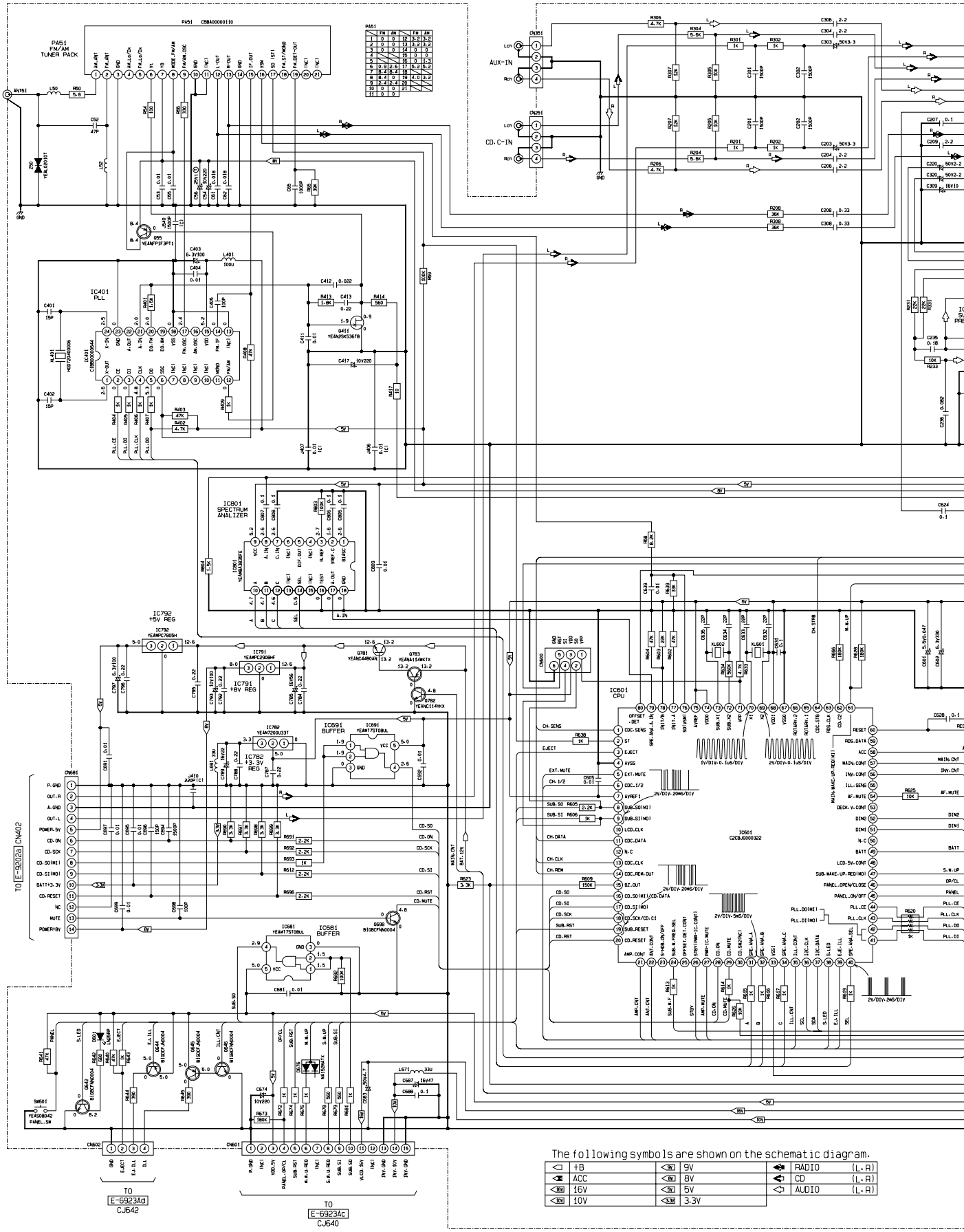

The following symbols are shown on the schematic diagram.

+B		9V		RADIO	(L,R)
ACC		8V		CD	(L,R)
16V		5V		AUDIO	(L,R)
10V		3.3V			

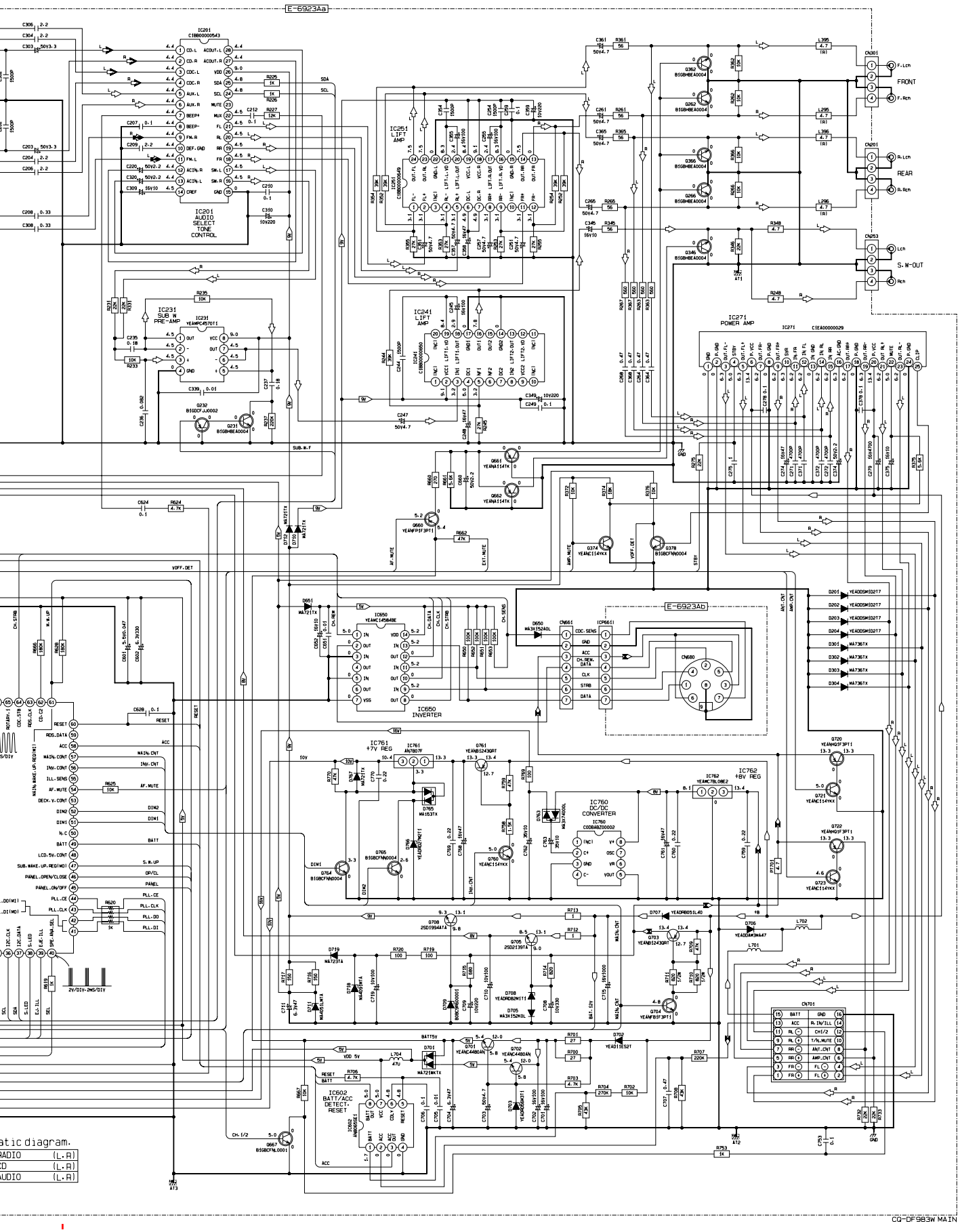
E-6923Aa
IC201
AUDIO SELECT TONE CONTROL
IC231
SUB W PRE-AMP
IC251
LIFT AMP
IC241
LIFT AMP
IC271
POWER AMP
FRONT
REAR
S.W-OUT
E-6923Ab
IC650
INVERTER
IC761
+7V REG
IC762
+8V REG
IC760
DC/DC CONVERTER
IC602
BATT/ACC DETECT-RESET
CN701
CQ-DF983W MAIN

21.3. Display Block

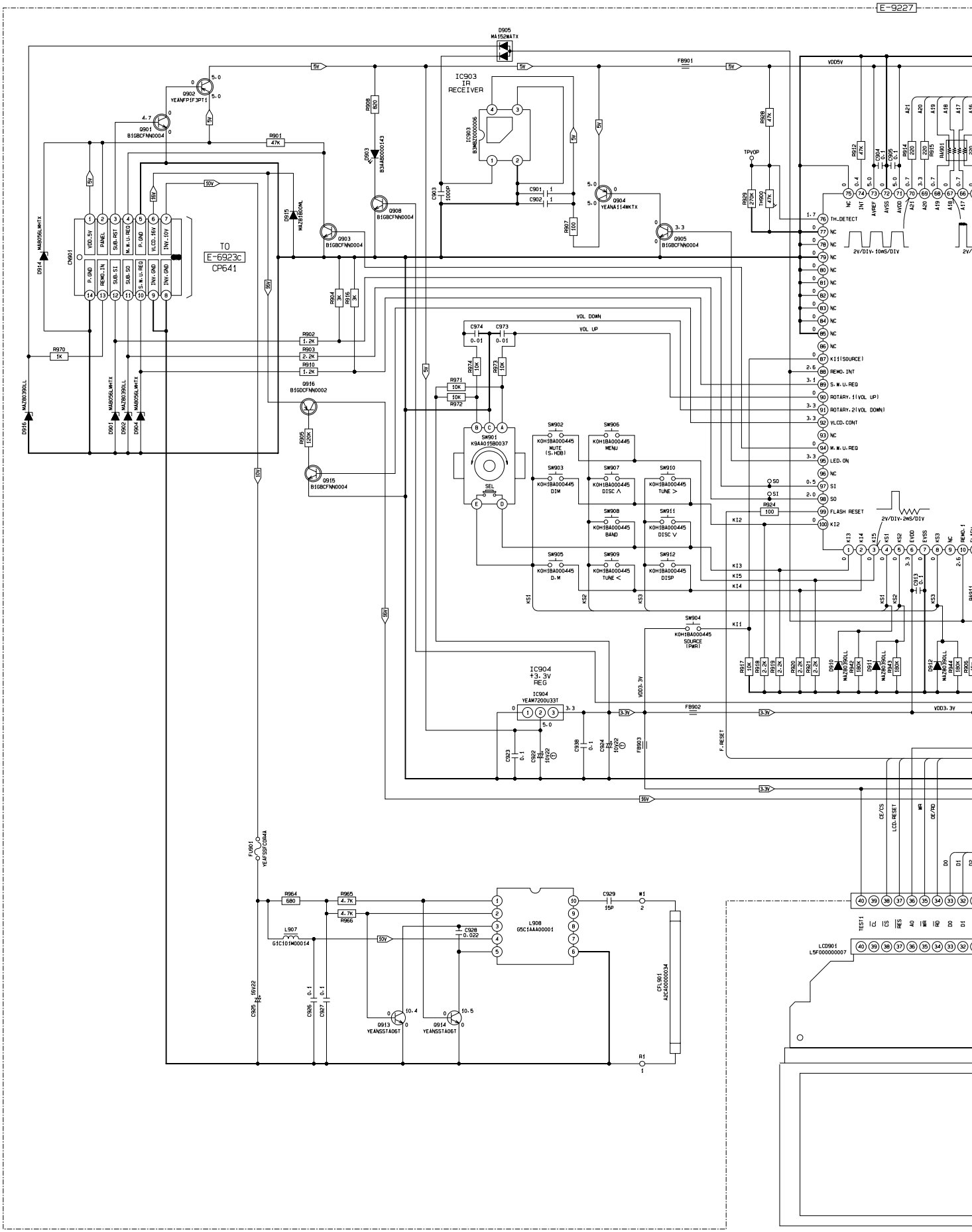

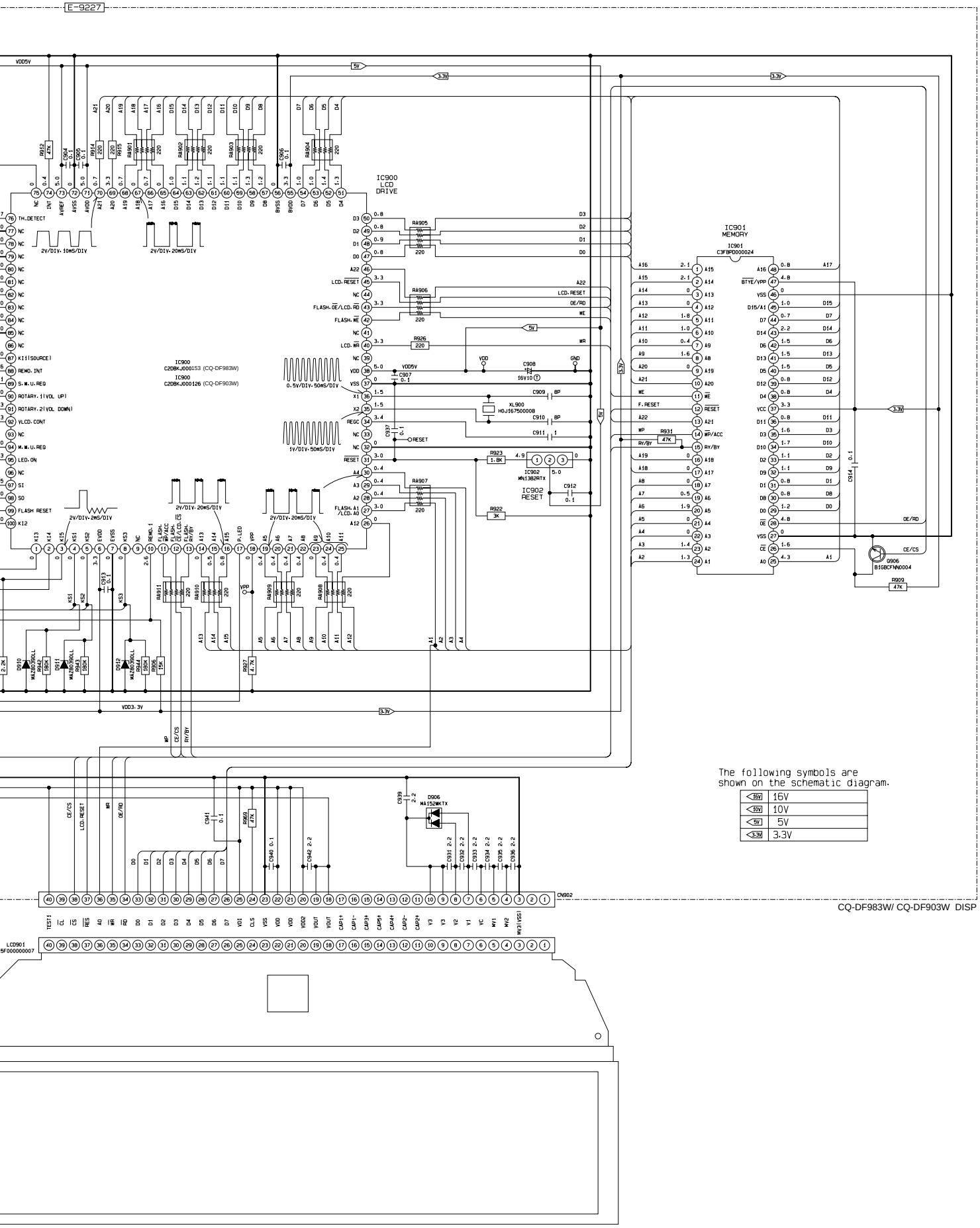

CQ-DF983W/ CQ-DF903W DISP

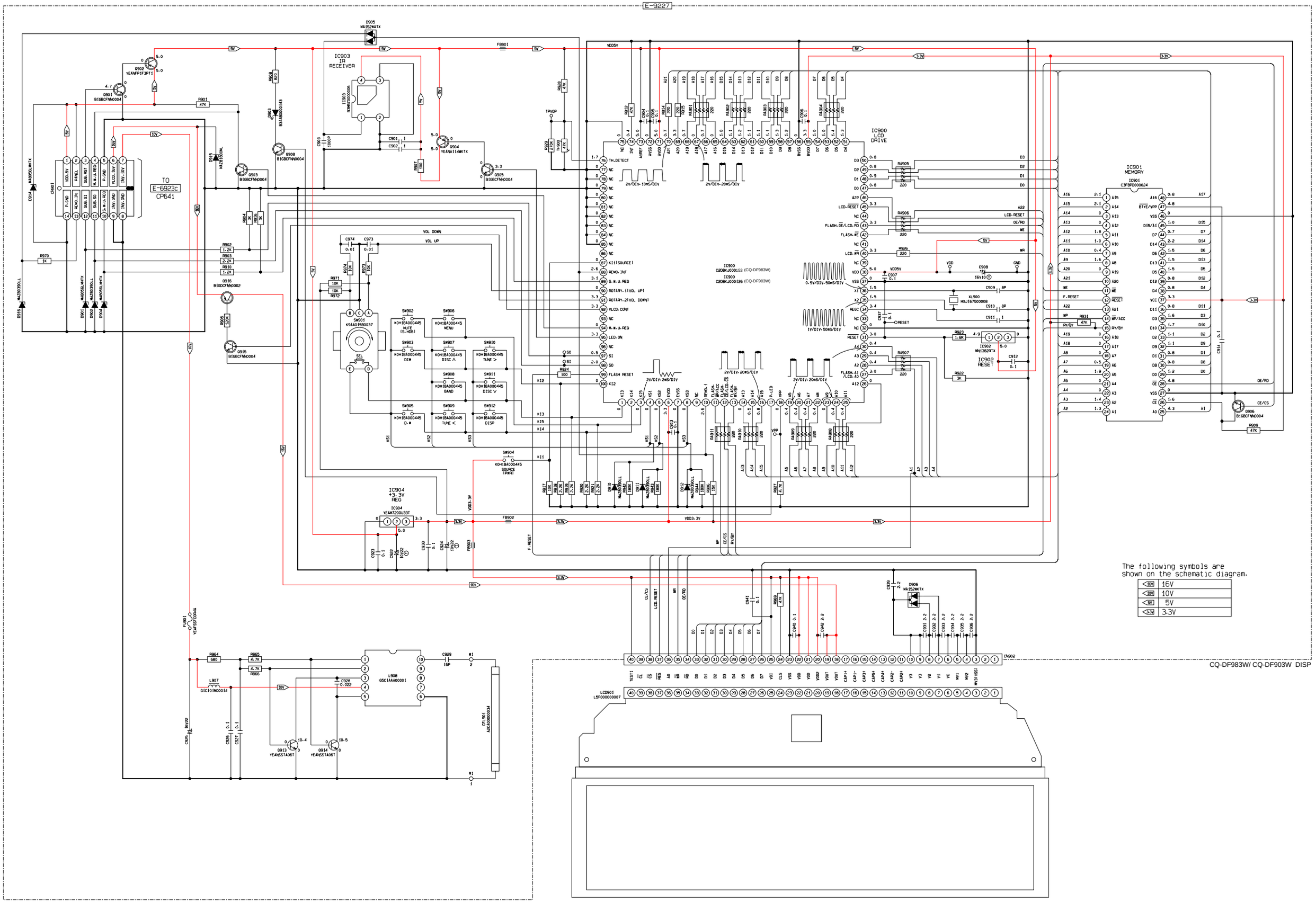

The following symbols are shown on the schematic diagram.

16V	16V
10V	10V
5V	5V
3.3V	3.3V

The following symbols are shown on the schematic diagram.

16V	16V
10V	10V
5V	5V

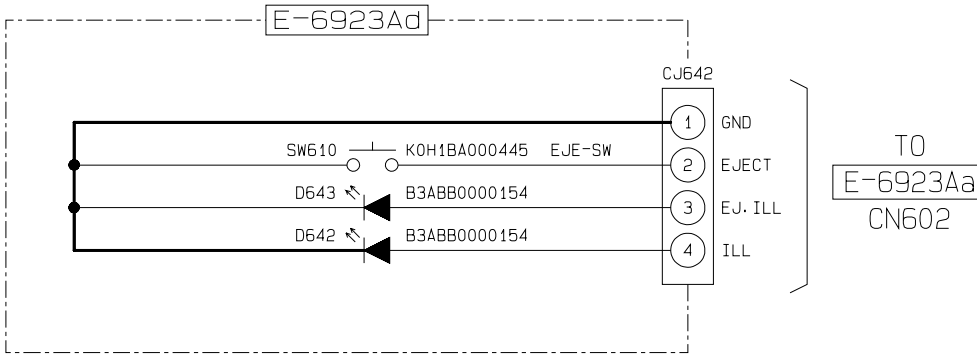

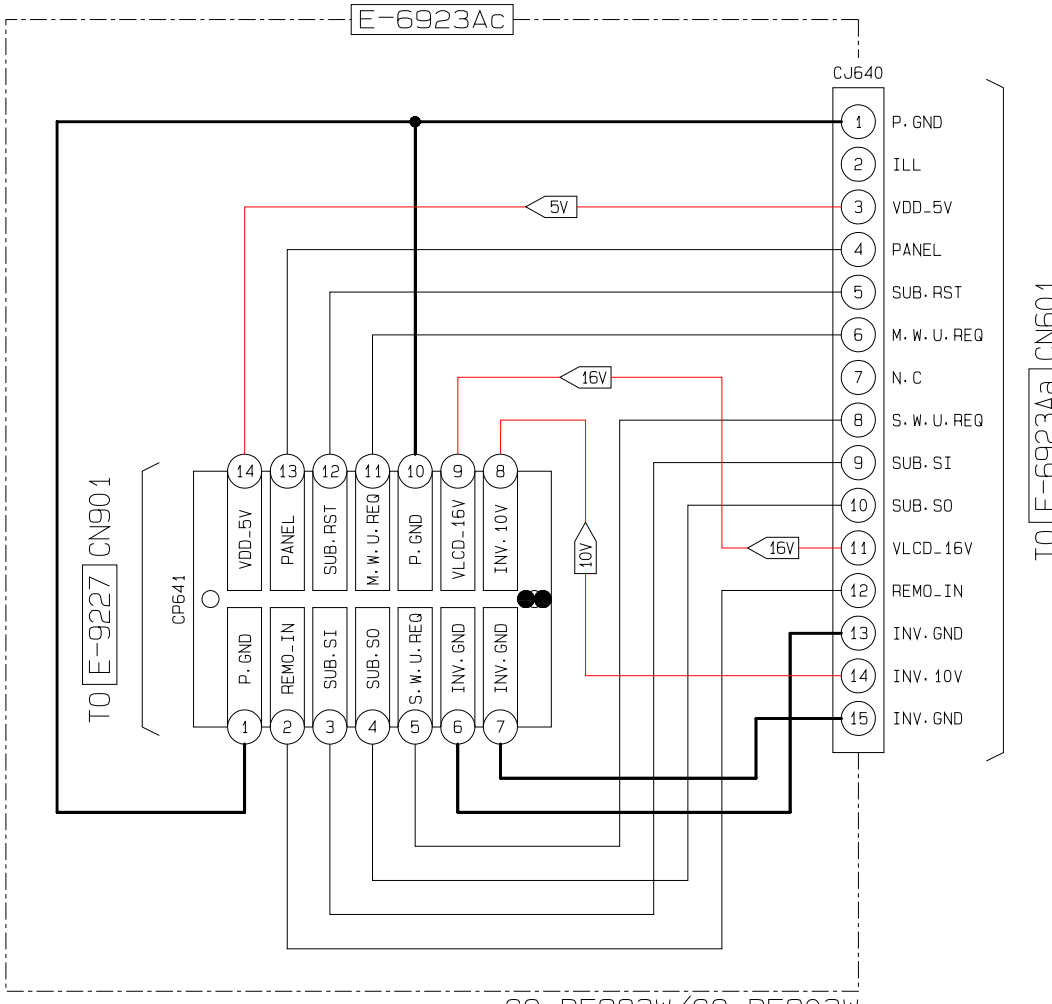

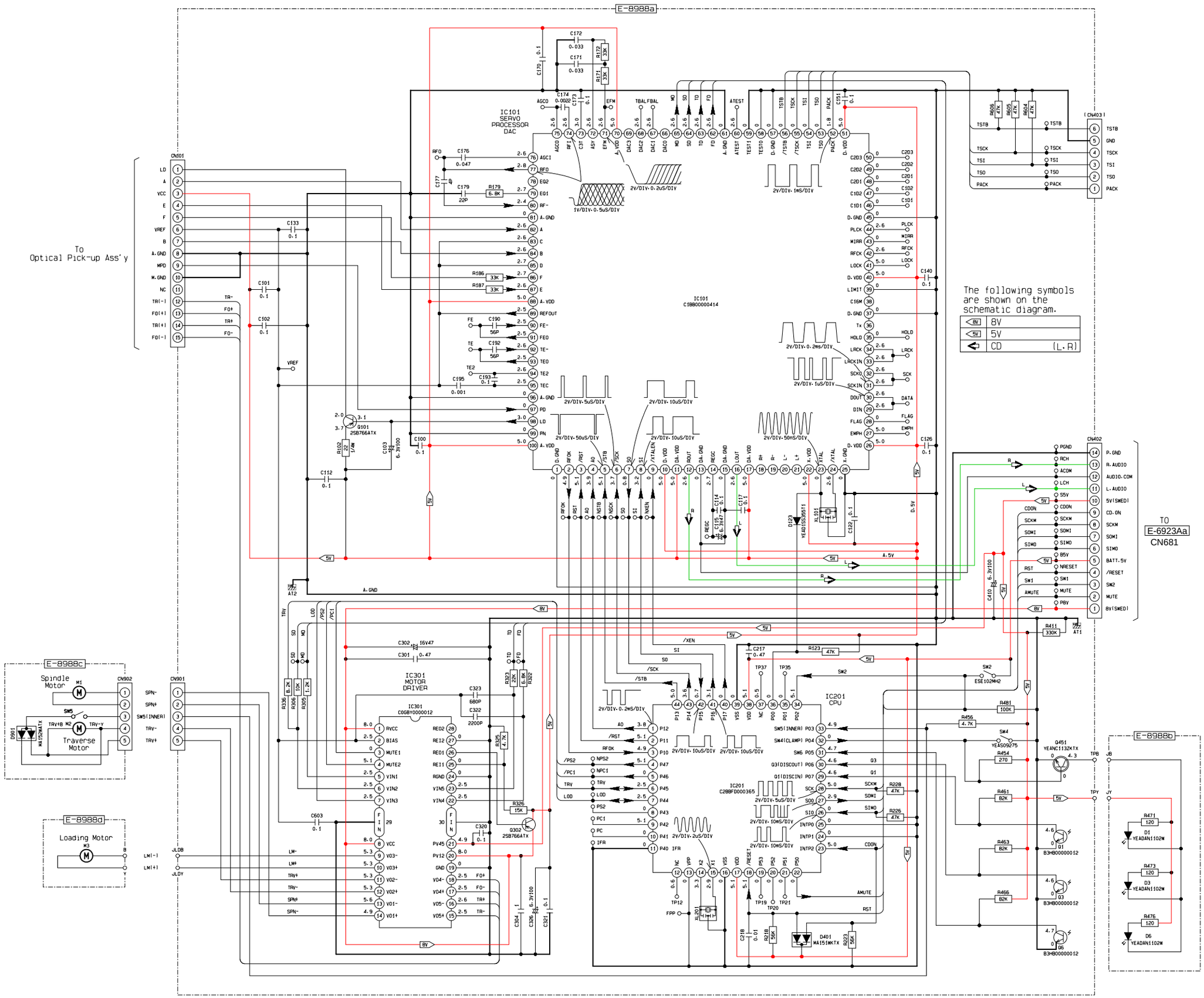

CQ-DF903W CD DECK (NCD8)

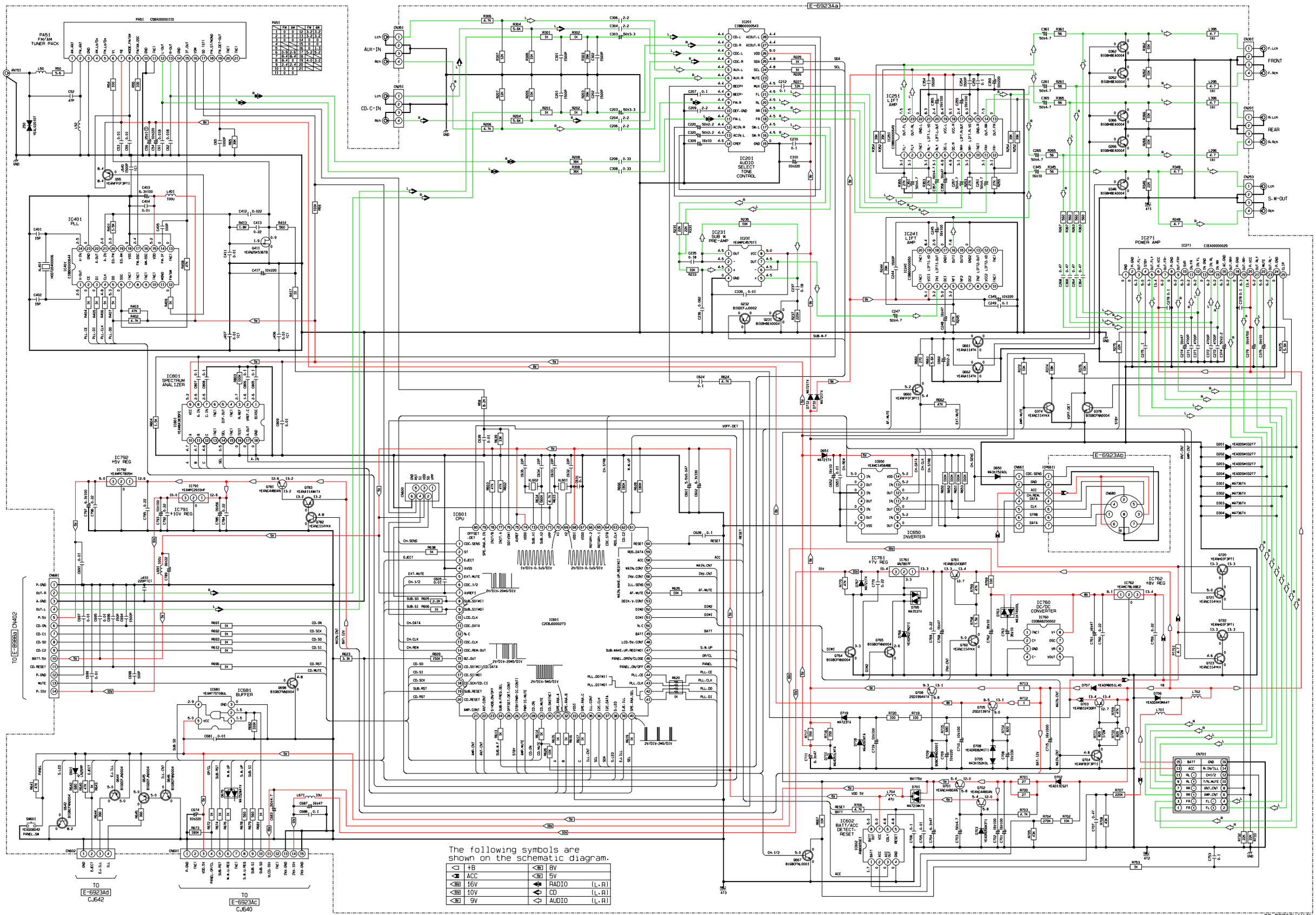
E-6923Aa
PA51 FM/AM TUNER PACK
AUX-IN
CD.C-IN
IC201 AUDIO SELECT TONE CONTROL
IC231 SUB W PRE-AMP
IC251 LIFT AMP
IC241 LIFT AMP
IC271 POWER AMP
FRONT
REAR
S.W-OUT
IC401 PLL
IC801 SPECTRUM ANALIZER
IC792 +5V REG
IC791 +10V REG
IC601 CPU
IC681 BUFFER
IC650 INVERTER
E-6923Ab
IC761 +7V REG
IC762 +8V REG
IC760 DC/DC CONVERTER
IC602 BATT/ACC DETECT-RESET
TO E-6998a CN402
TO E-6923Ad CJ642
TO E-6923Ac CJ640
The following symbols are shown on the schematic diagram.
+B
ACC
16V
10V
9V
8V
5V
RADIO (L.R)
CD (L.R)
AUDIO (L.R)
CQ-DF903W MAIN

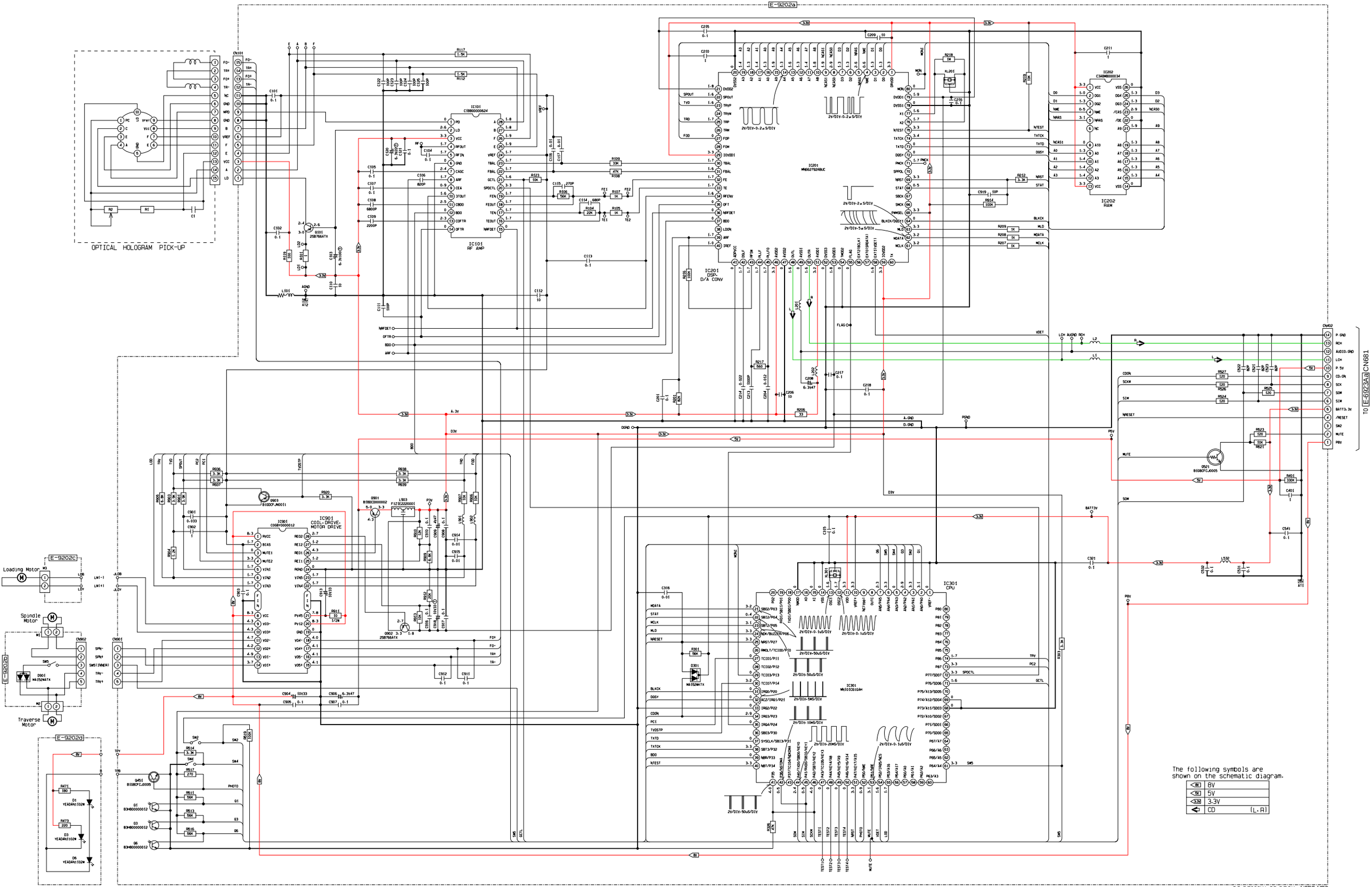
E-9202a
OPTICAL HOLOGRAM PICK-UP
IC101
RF AMP
IC201
DSP,
D/A CONV
IC202
RAM
IC301
CPU
IC901
COIL-DRIVE-
MOTOR DRIVE
Loading Motor
Spindle
Motor
Traverse
Motor
E-9202c
E-9202d
CN402
TO E-6923A CN601
The following symbols are
shown on the schematic diagram.
8V
5V
3.3V
CD (L,R)

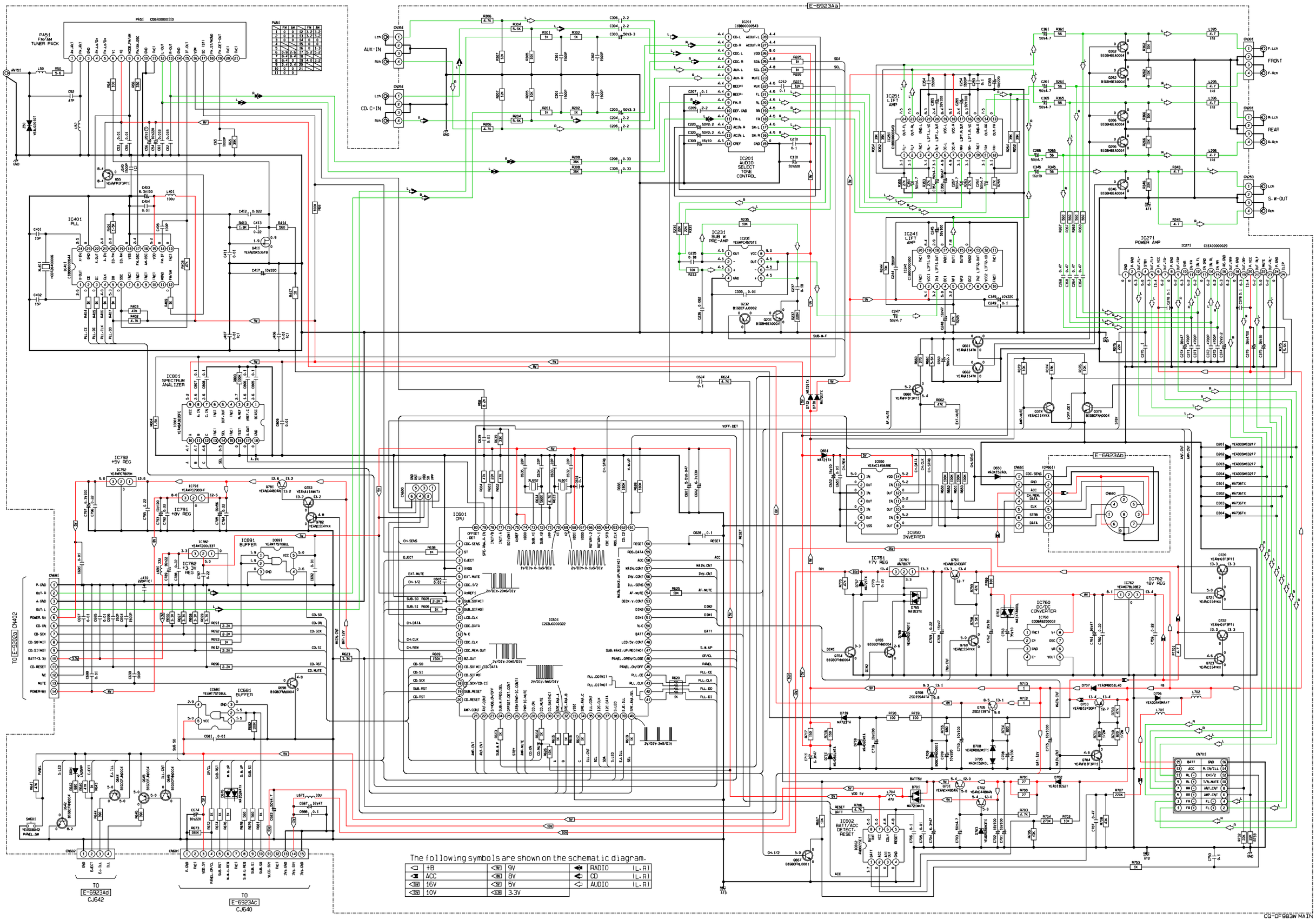
E-6923Aa
PA51 FM/AM TUNER PACK
AUX-IN
CD.C-IN
IC201 AUDIO SELECT TONE CONTROL
IC231 SUB W PRE-AMP
IC251 LIFT AMP
IC241 LIFT AMP
IC271 POWER AMP
FRONT
REAR
S.W-OUT
IC401 PLL
IC801 SPECTRUM ANALIZER
IC792 +5V REG
IC791 +8V REG
IC782 +3.3V REG
IC691 BUFFER
IC681 BUFFER
IC601 CPU
IC650 INVERTER
E-6923Ab
IC761 +7V REG
IC762 +8V REG
IC760 DC/DC CONVERTER
IC602 BATT/ACC DETECT-RESET
TO E-9202a CN402
TO E-6923Ad CJ642
TO E-6923Ac CJ640
The following symbols are shown on the schematic diagram.
+B
ACC
16V
10V
9V
8V
5V
3.3V
RADIO (L.A)
CD (L.A)
AUDIO (L.A)
CQ-DF983W MAIN

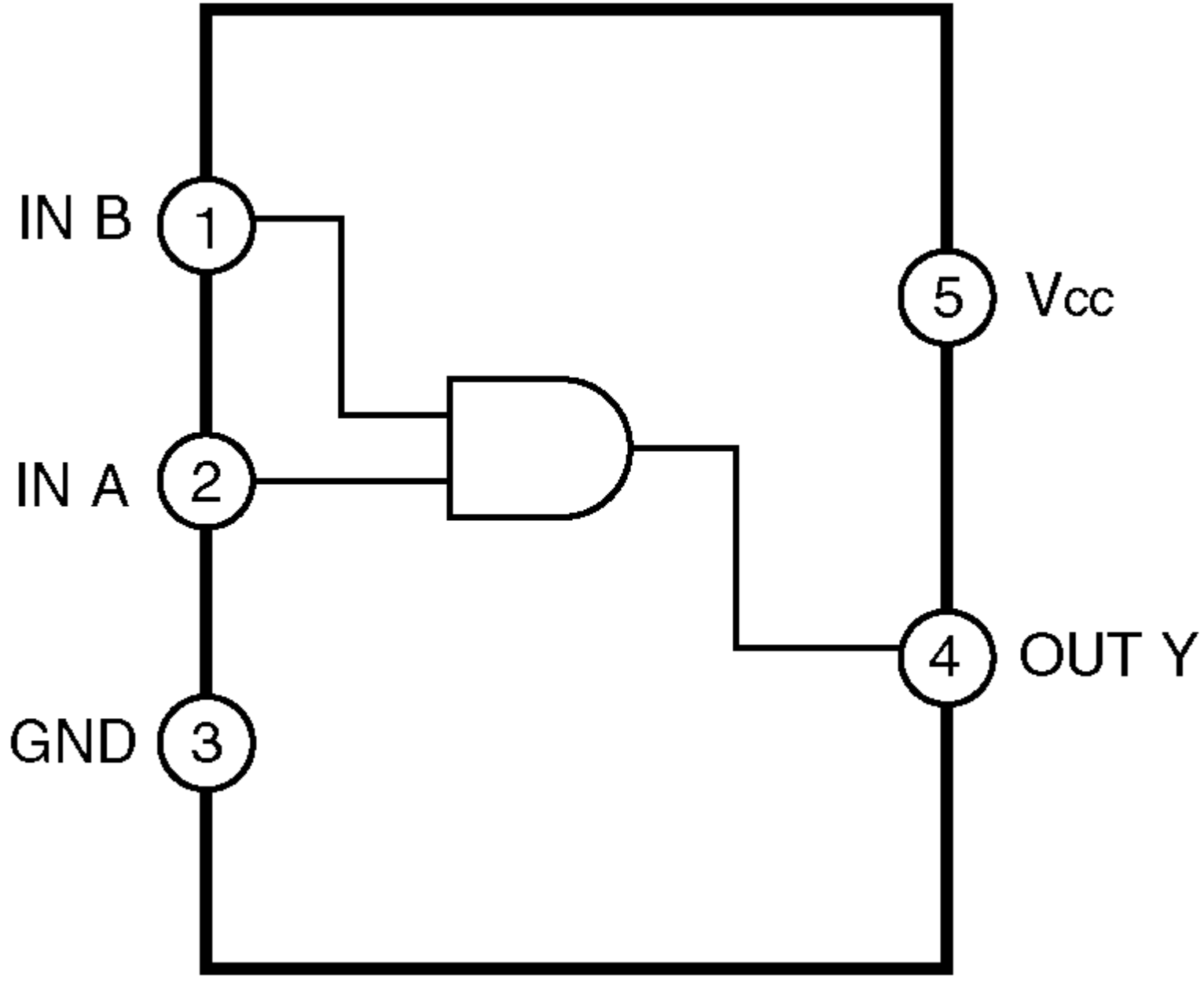
IN B
1
IN A
2
GND
3
5
Vcc
4
OUT Y

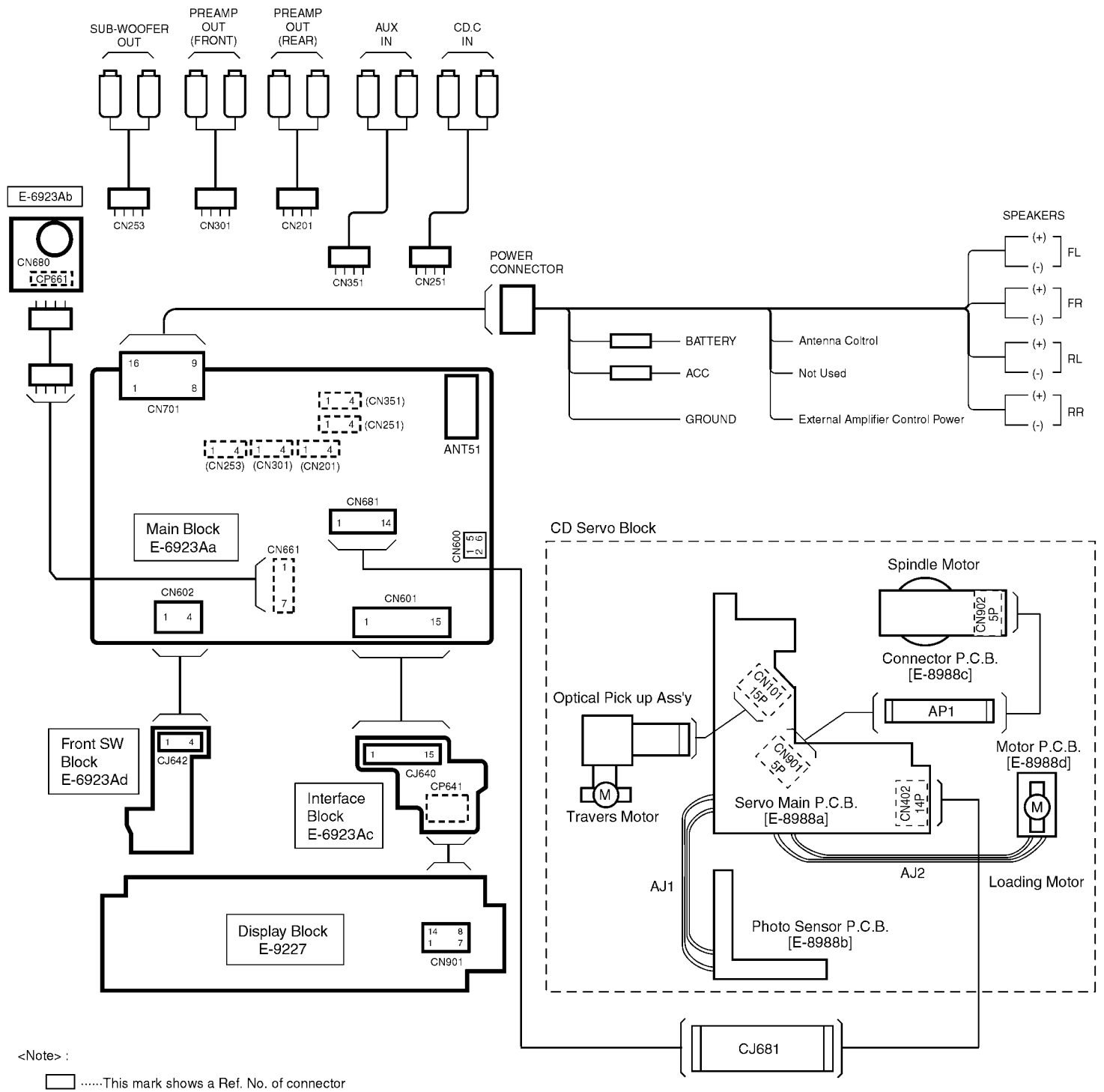

<Note> :

▭ ·····This mark shows a Ref. No. of connector

▭ ·····This mark shows a mounting position of connector.

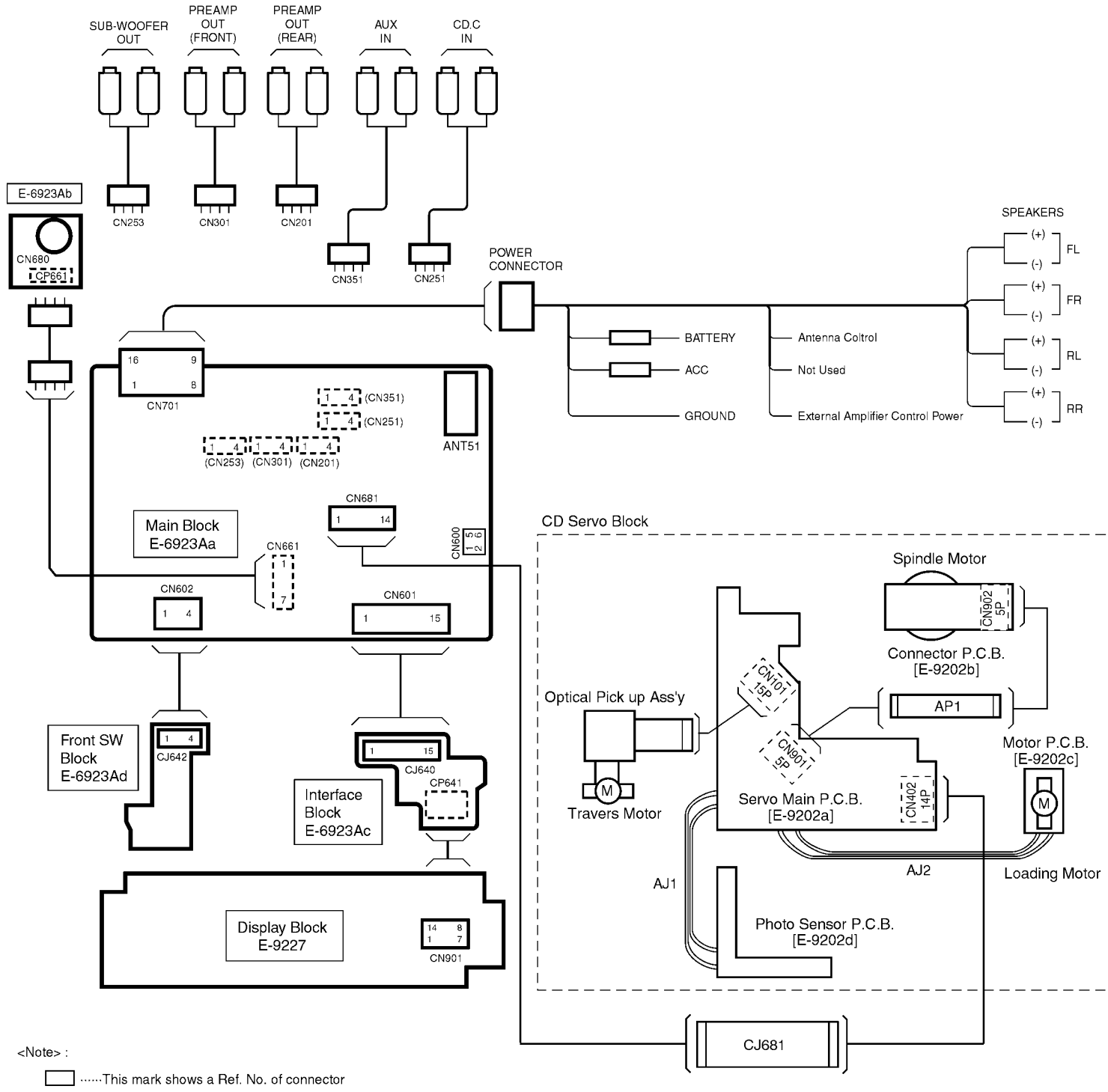

<Note> :

▭ ·····This mark shows a Ref. No. of connector

- - ·····This mark shows a mounting position of connector.

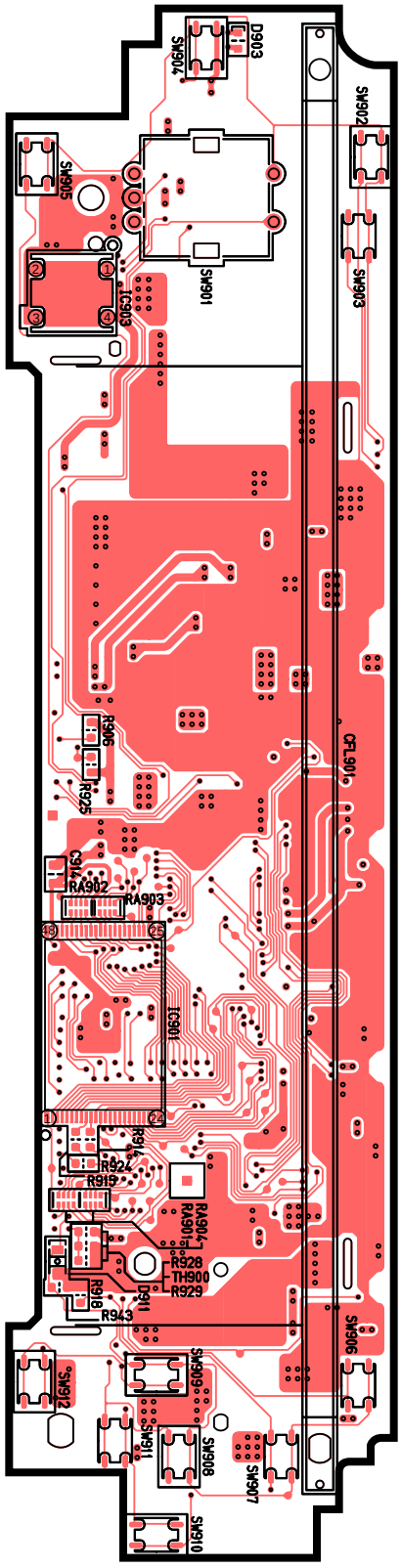

[E-9227] [Top View]

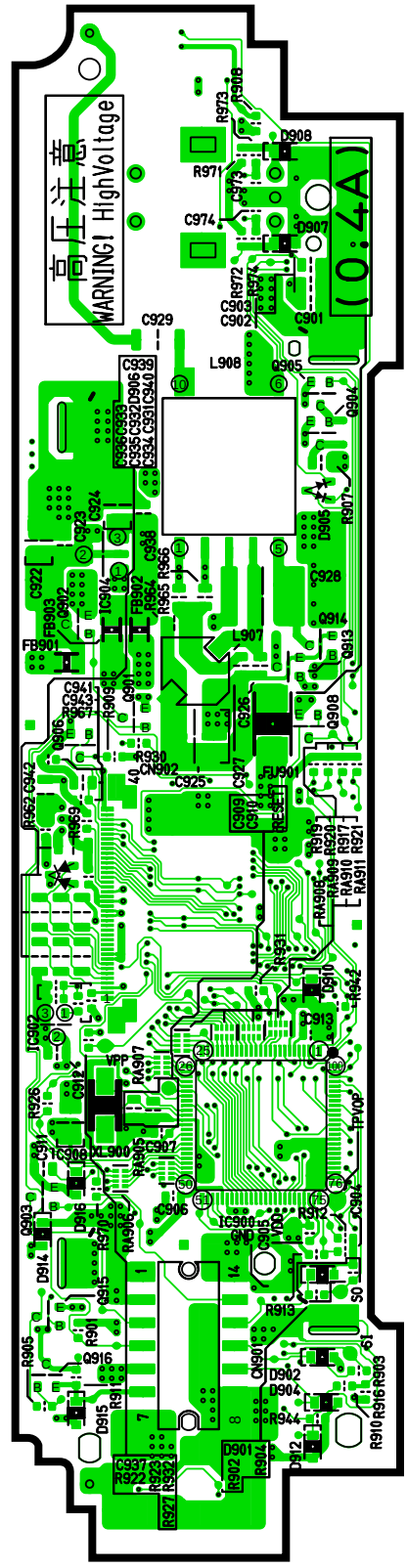

[E-9227] [Bottom View]

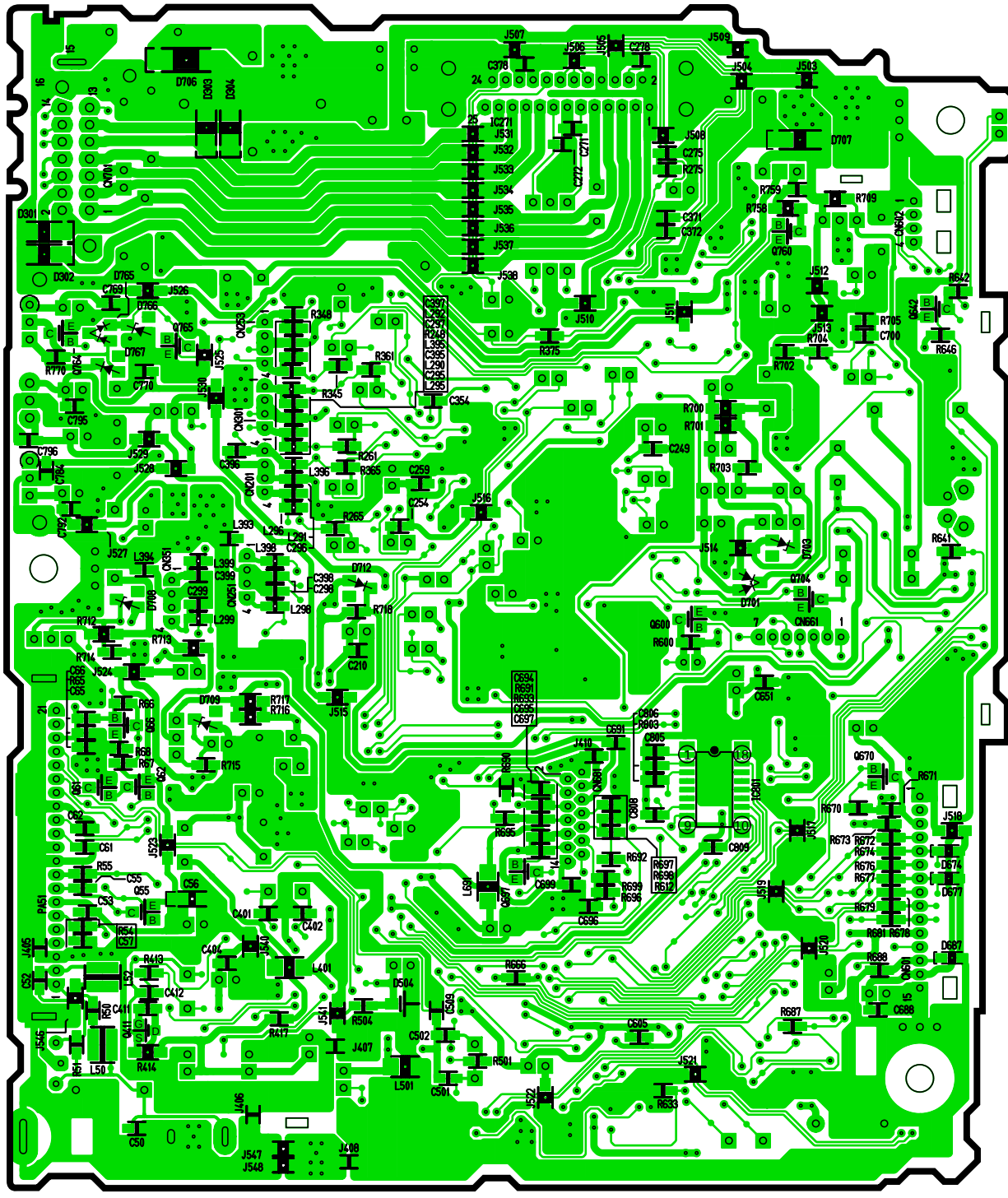

[E-6923Aa] [Bottom View]

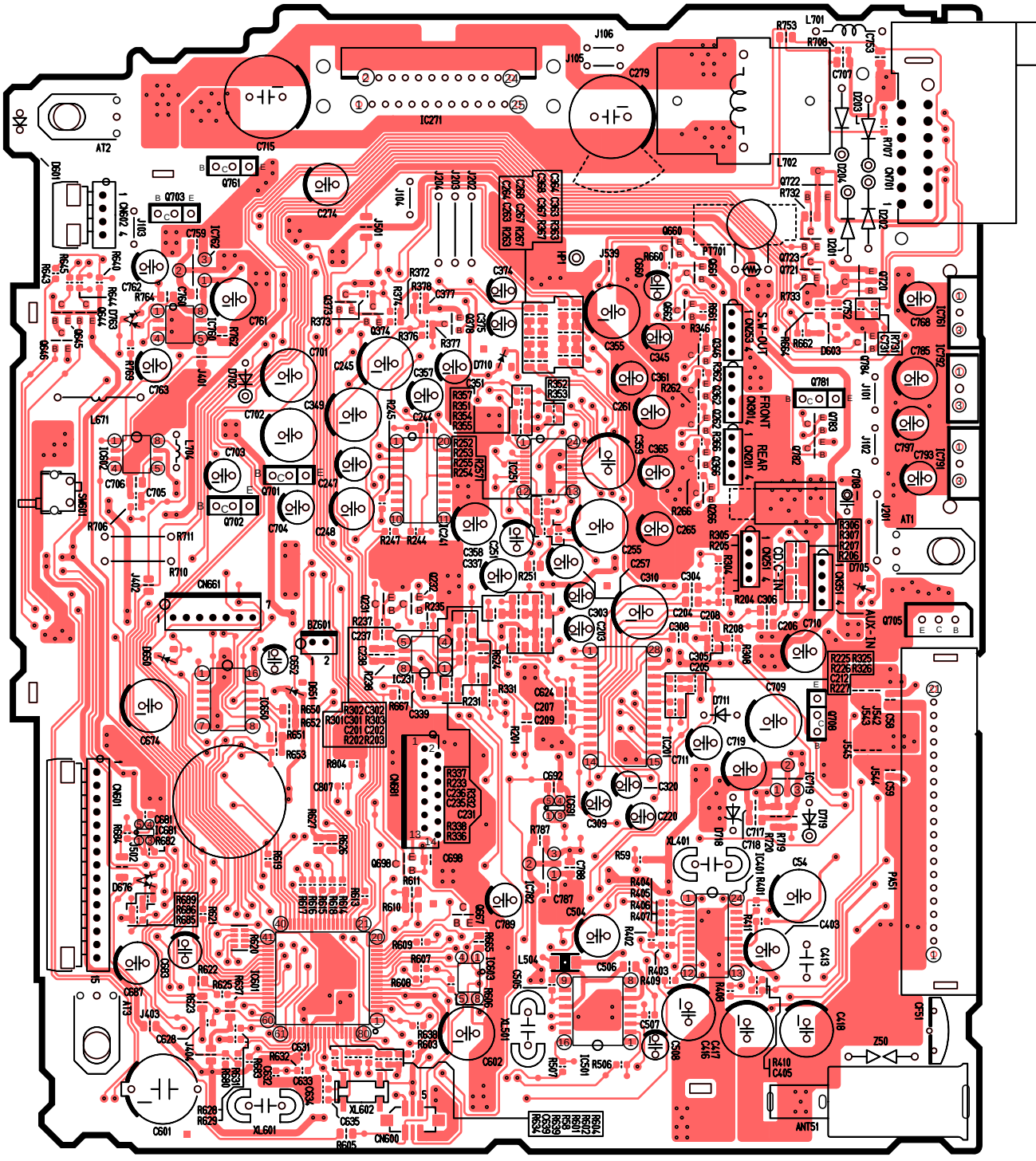

[E-6923Aa] [Top View]

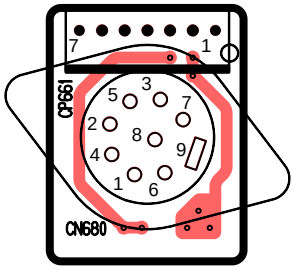

[E-6923Ab]
[Top View]

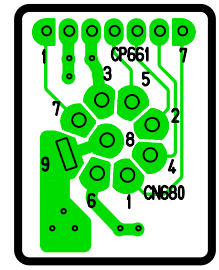

[E-6923Ab]
[Bottom View]

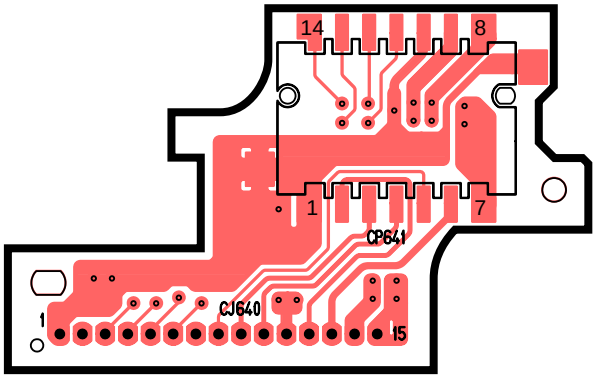

[E-6923Ac] [Top View]

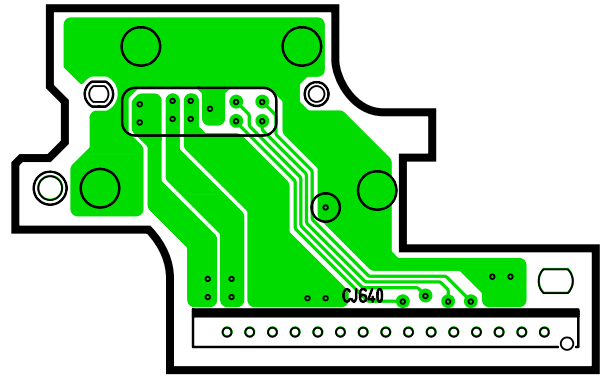

[E-6923Ac] [Bottom View]

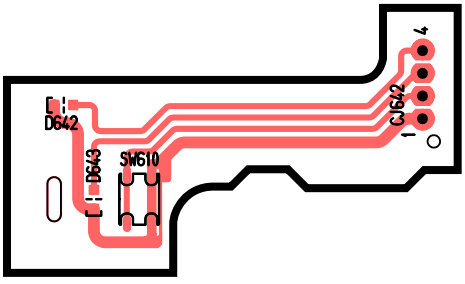

[E-6923Ad] [Top View]

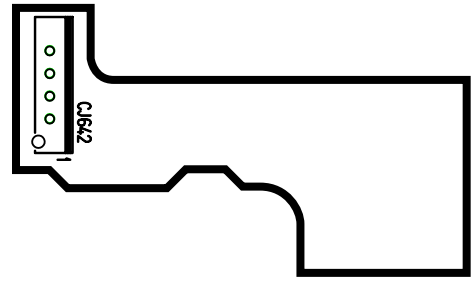

[E-6923Ad] [Bottom View]

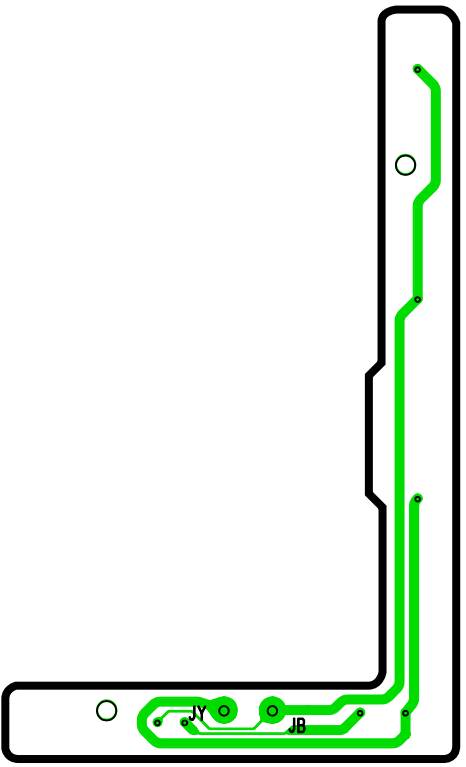

[E-8988b][Bottom View]

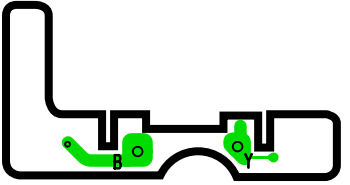

[E-8988d][Bottom View]

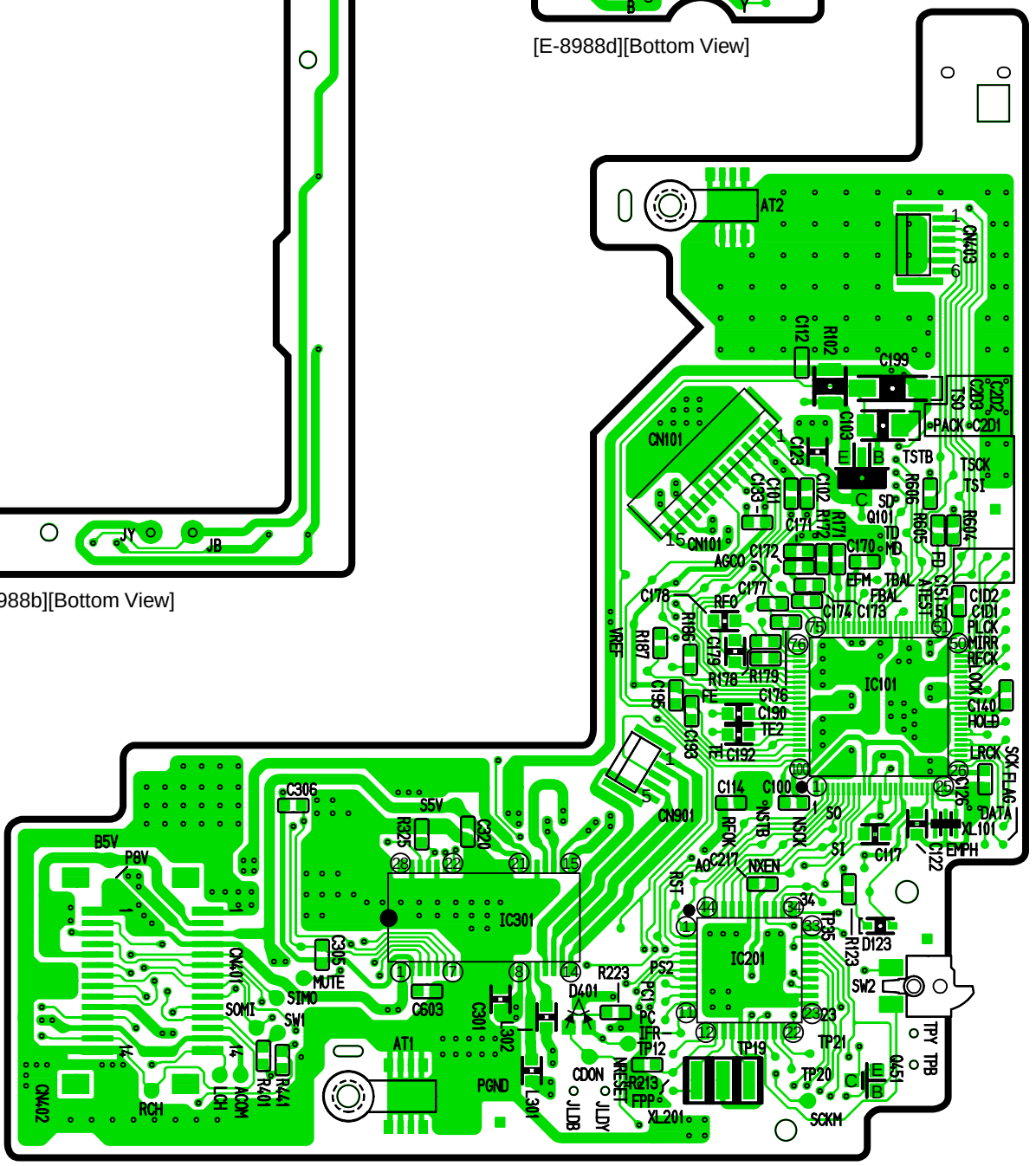

[E-8988a][Bottom View]

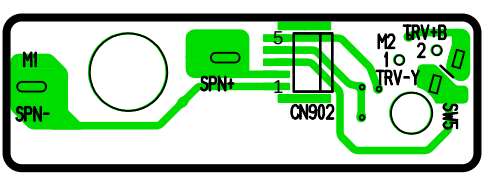

[E-8988c][Bottom View]

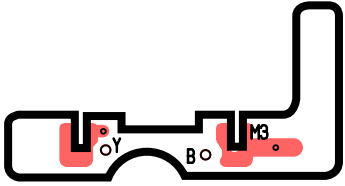

[E-8988d][Top View]

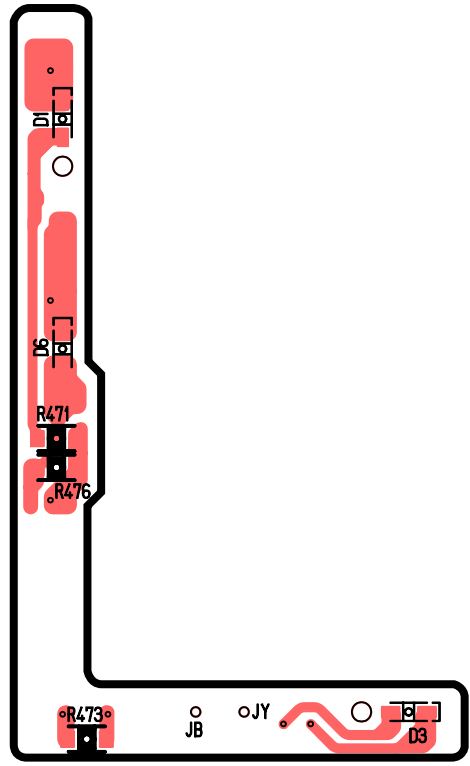

[E-8988b][Top View]

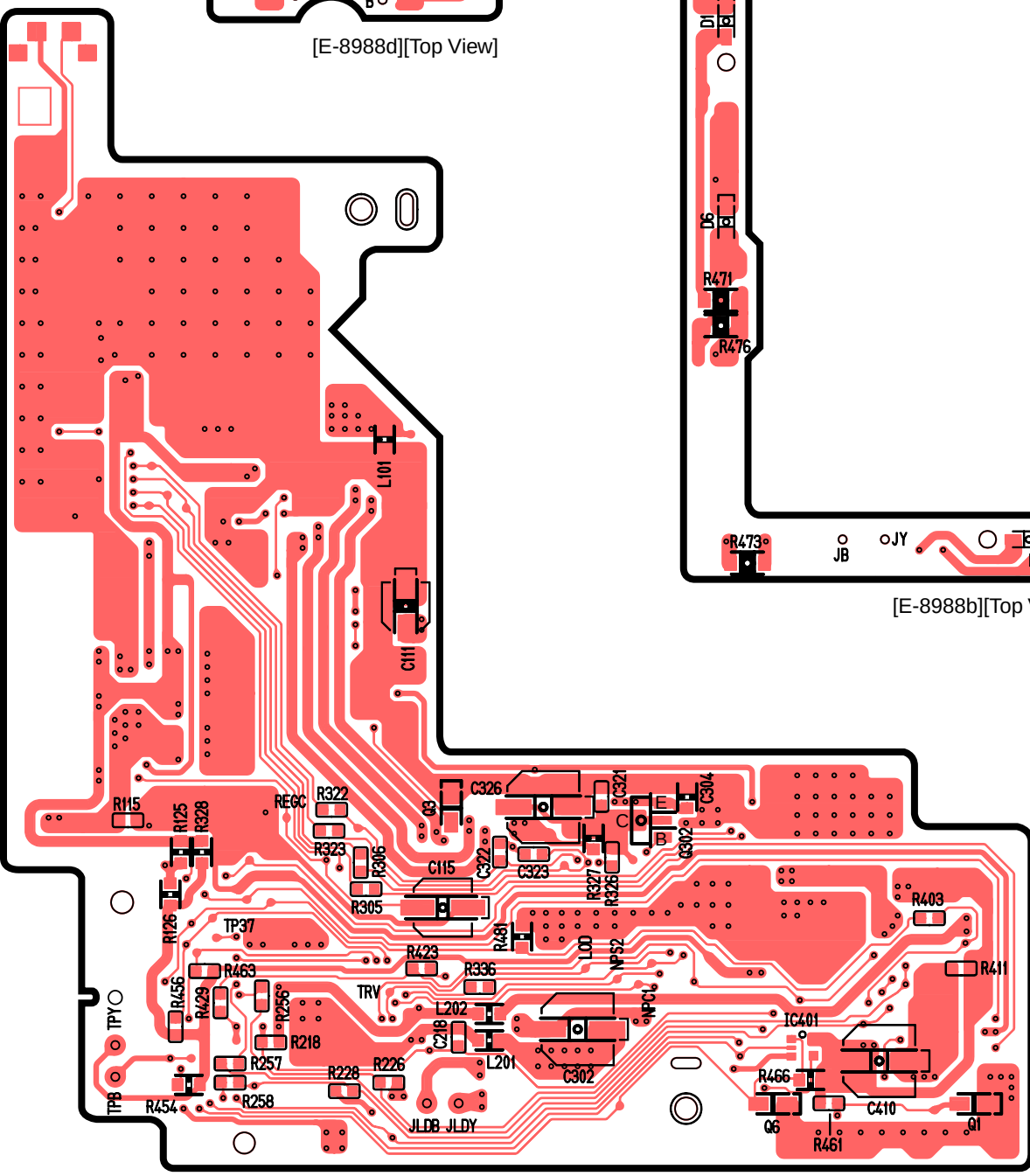

[E-8988a][Top View]

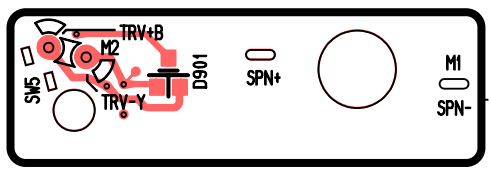

[E-8988c][Top View]

[E-9202d] [Bottom View]

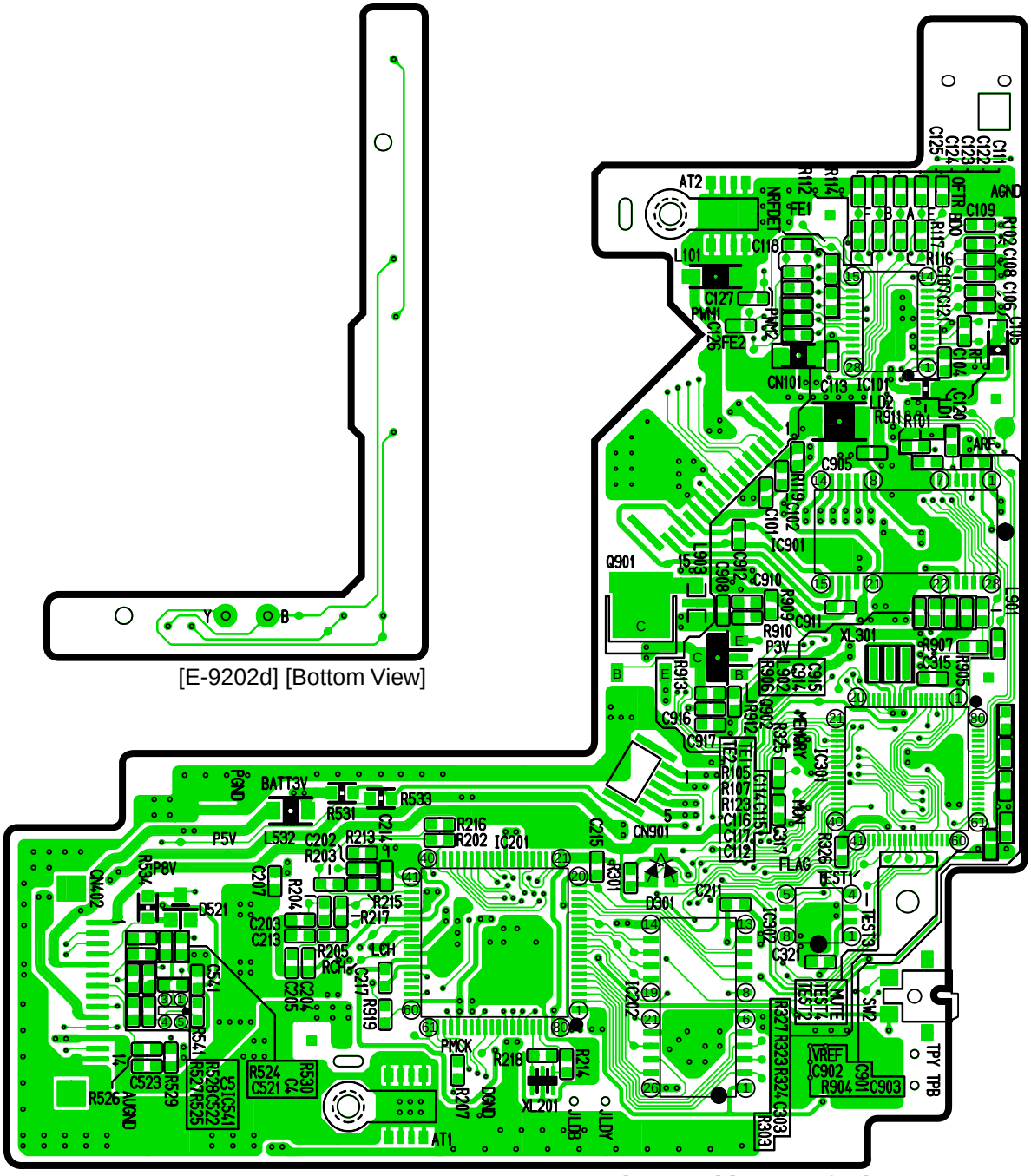

[E-9202a] [Bottom View]

[E-9202b] [Bottom View]

[E-9202c] [Bottom View]

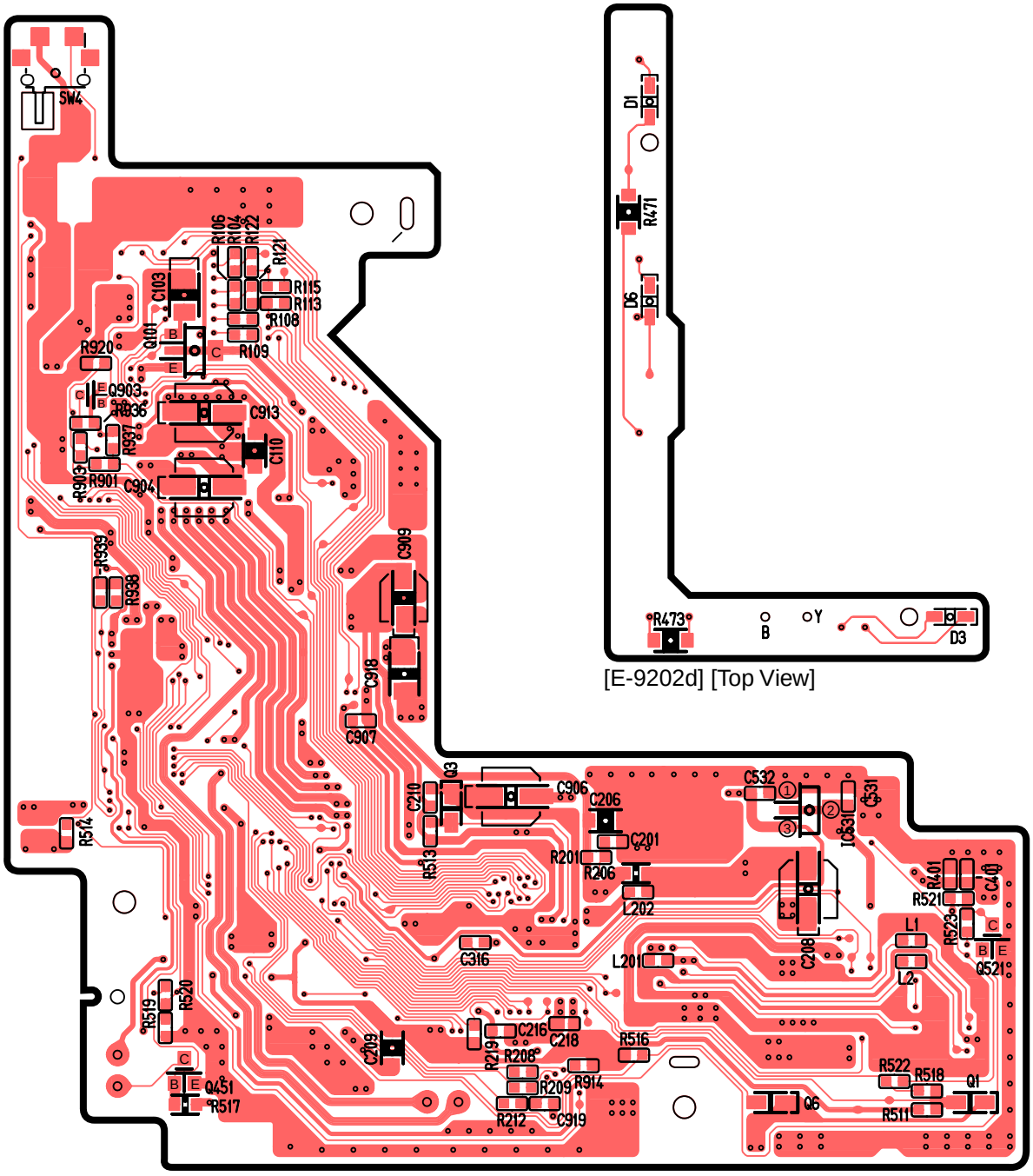

[E-9202d] [Top View]

[E-9202a] [Top View]

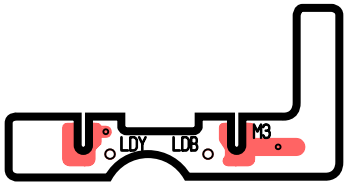

[E-9202c] [Top View]

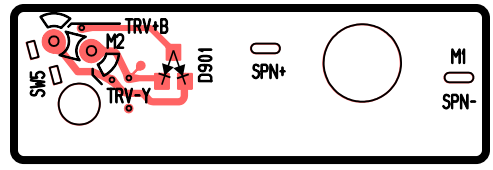

[E-9202b] [Top View]

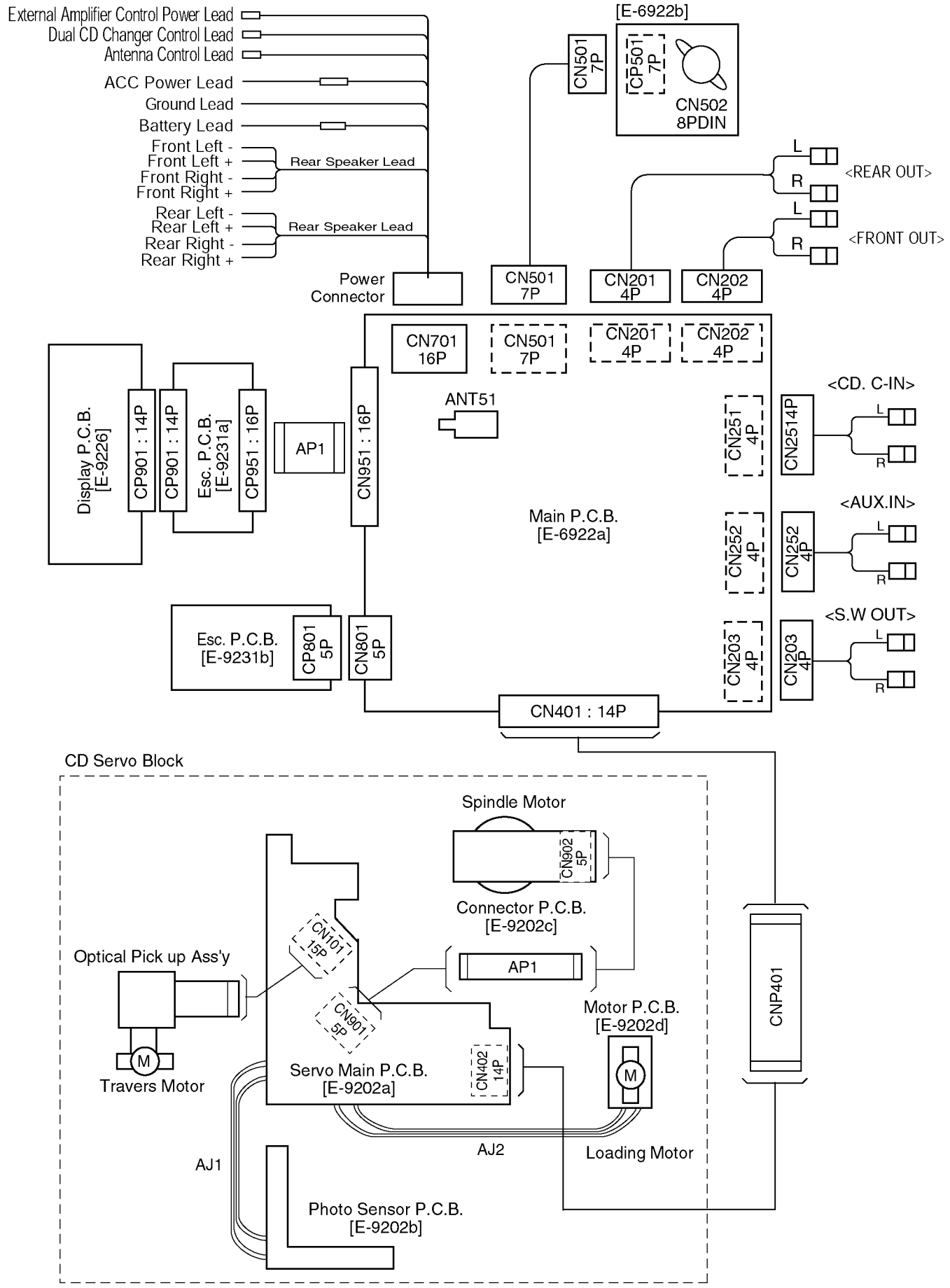

<Note> :

[ ] ·····This mark shows a Ref. No. of connector

[- - -] ·····This mark shows a mounting position of connector.