OPEN
Panasonic
MOSFET 50W x 4
VOL
FM P-6 87.9
MENU
MUTE
P.SET
BAND
AFM/ /1

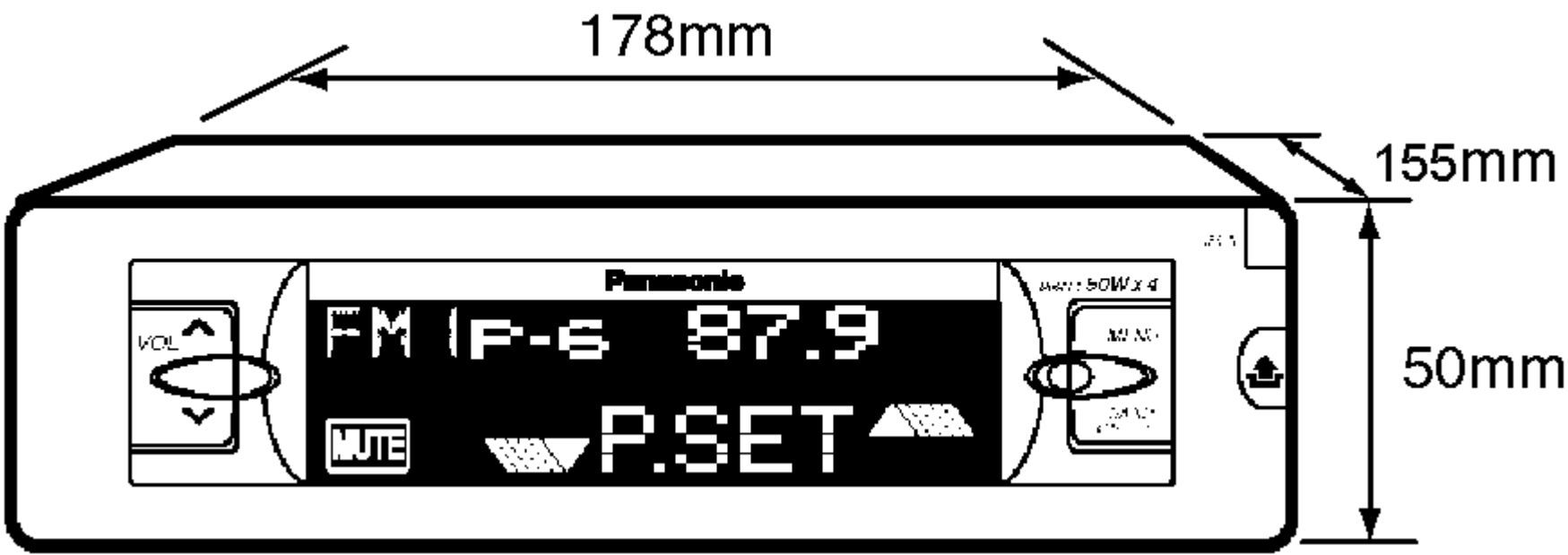
178mm
155mm
50mm
Panasonic
VOL
FM P-6 87.9
MUTE
P.SET

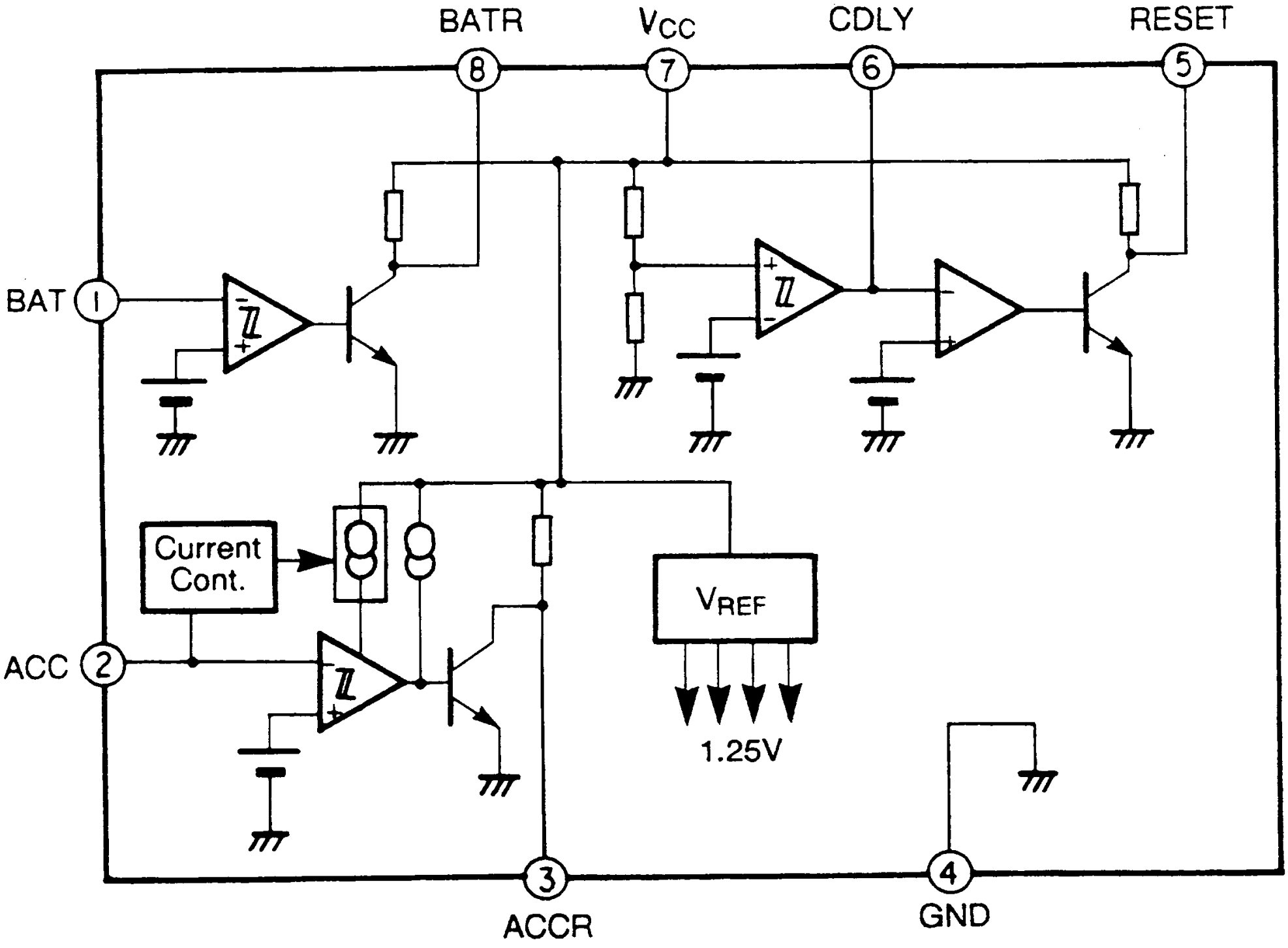
BATR
VCC
CDLY
RESET
8
7
6
5
BAT
1
Current Cont.
VREF
ACC
2
1.25V
3
ACCR
4
GND

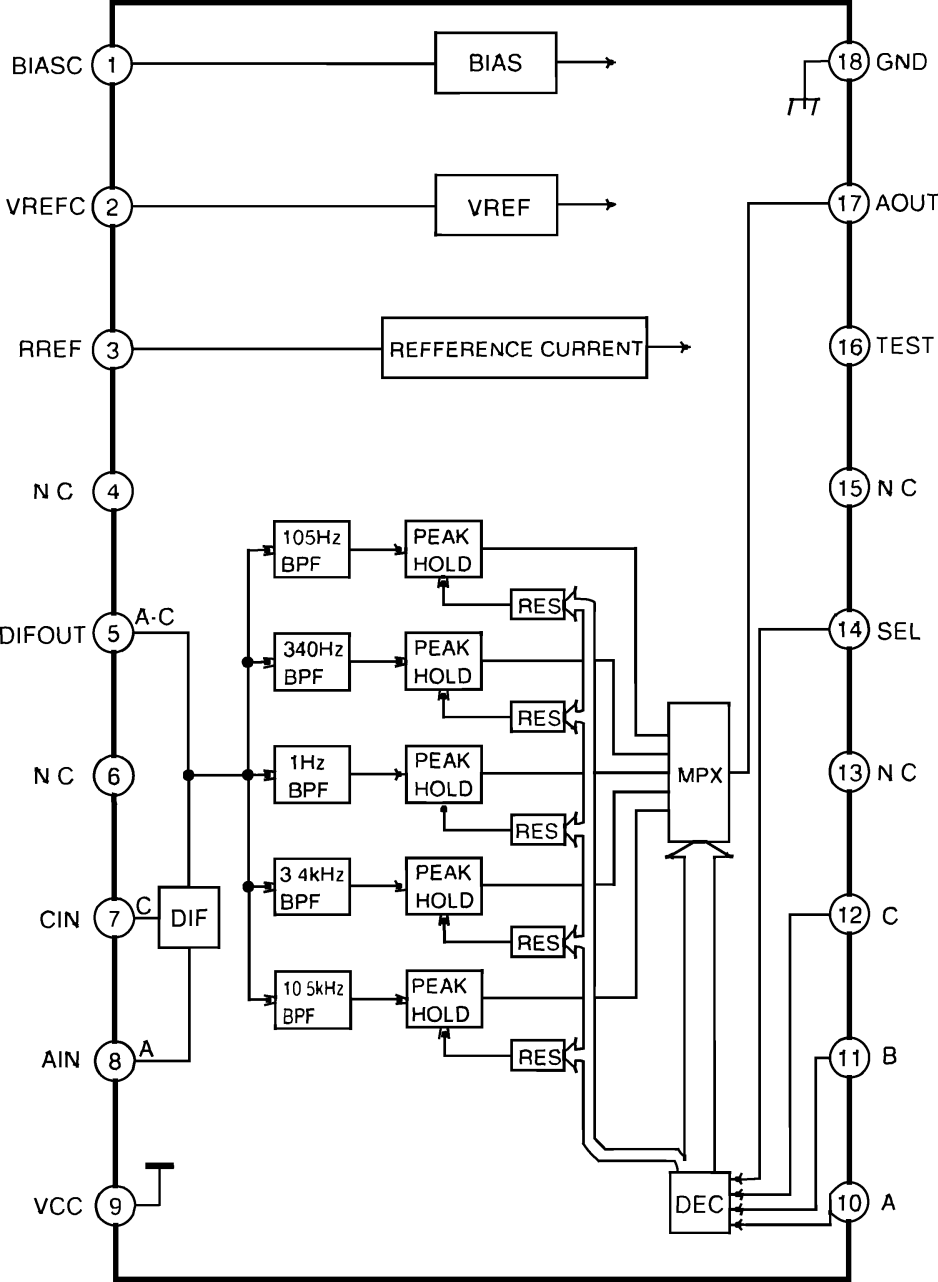
BIASC
1
BIAS
18
GND
VREFC
2
VREF
17
AOUT
RREF
3
REFFERENCE CURRENT
16
TEST
N C
4
15
N C
DIFOUT
5
A-C
14
SEL
N C
6
13
N C
CIN
7
C
DIF
12
C
AIN
8
A
11
B
VCC
9
10
A
105Hz BPF
340Hz BPF
1Hz BPF
3 4kHz BPF
10 5kHz BPF
PEAK HOLD
RES
MPX
DEC

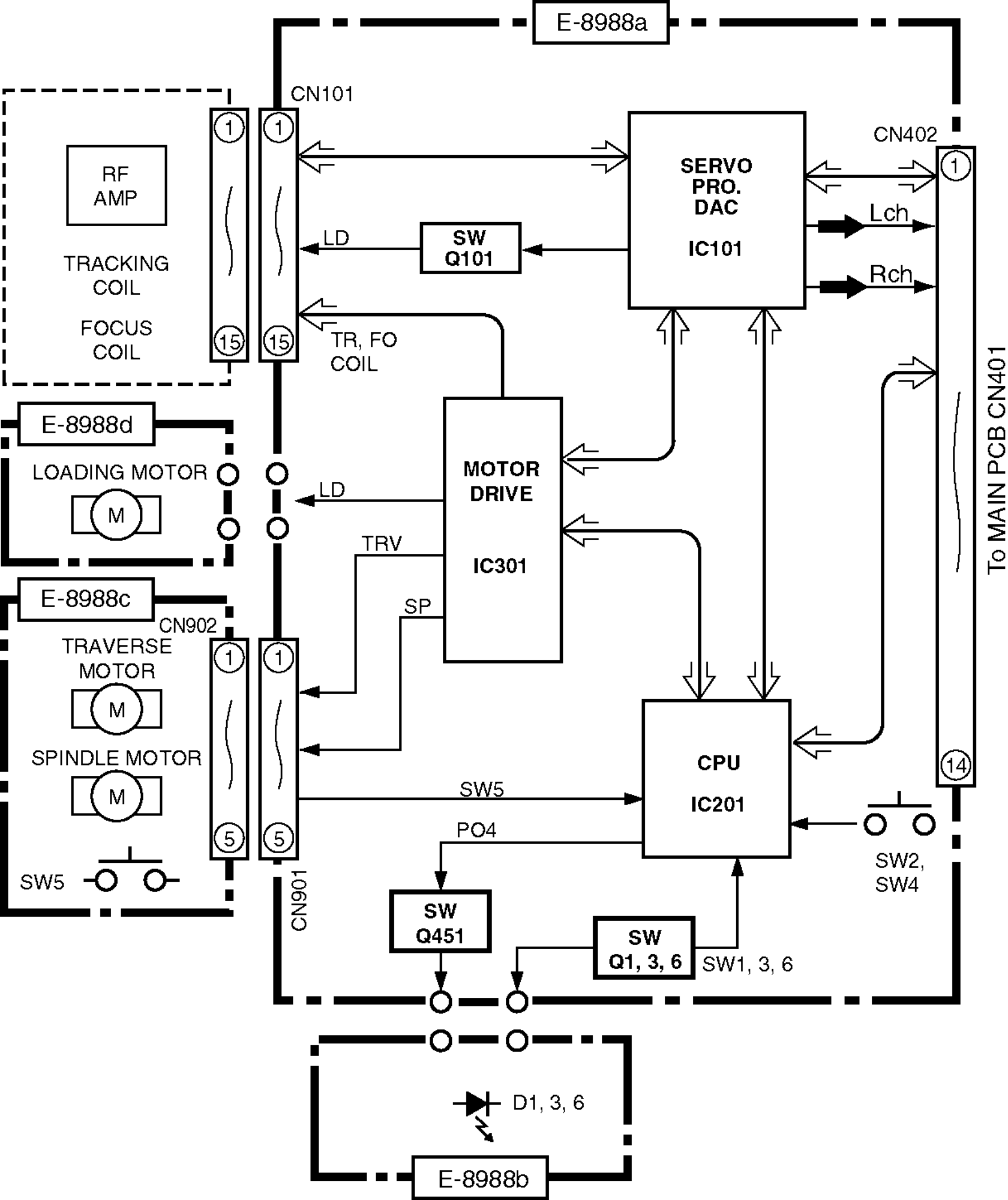
E-8988a
CN101
RF AMP
TRACKING COIL
FOCUS COIL
1
15
LD
SW Q101
SERVO PRO. DAC
IC101
CN402
Lch
Rch
TR, FO COIL
E-8988d
LOADING MOTOR
M
LD
MOTOR DRIVE
IC301
TRV
SP
E-8988c
CN902
TRAVERSE MOTOR
SPINDLE MOTOR
5
SW5
CN901
CPU
IC201
14
To MAIN PCB CN401
PO4
SW2, SW4
SW Q451
SW Q1, 3, 6
SW1, 3, 6
D1, 3, 6
E-8988b

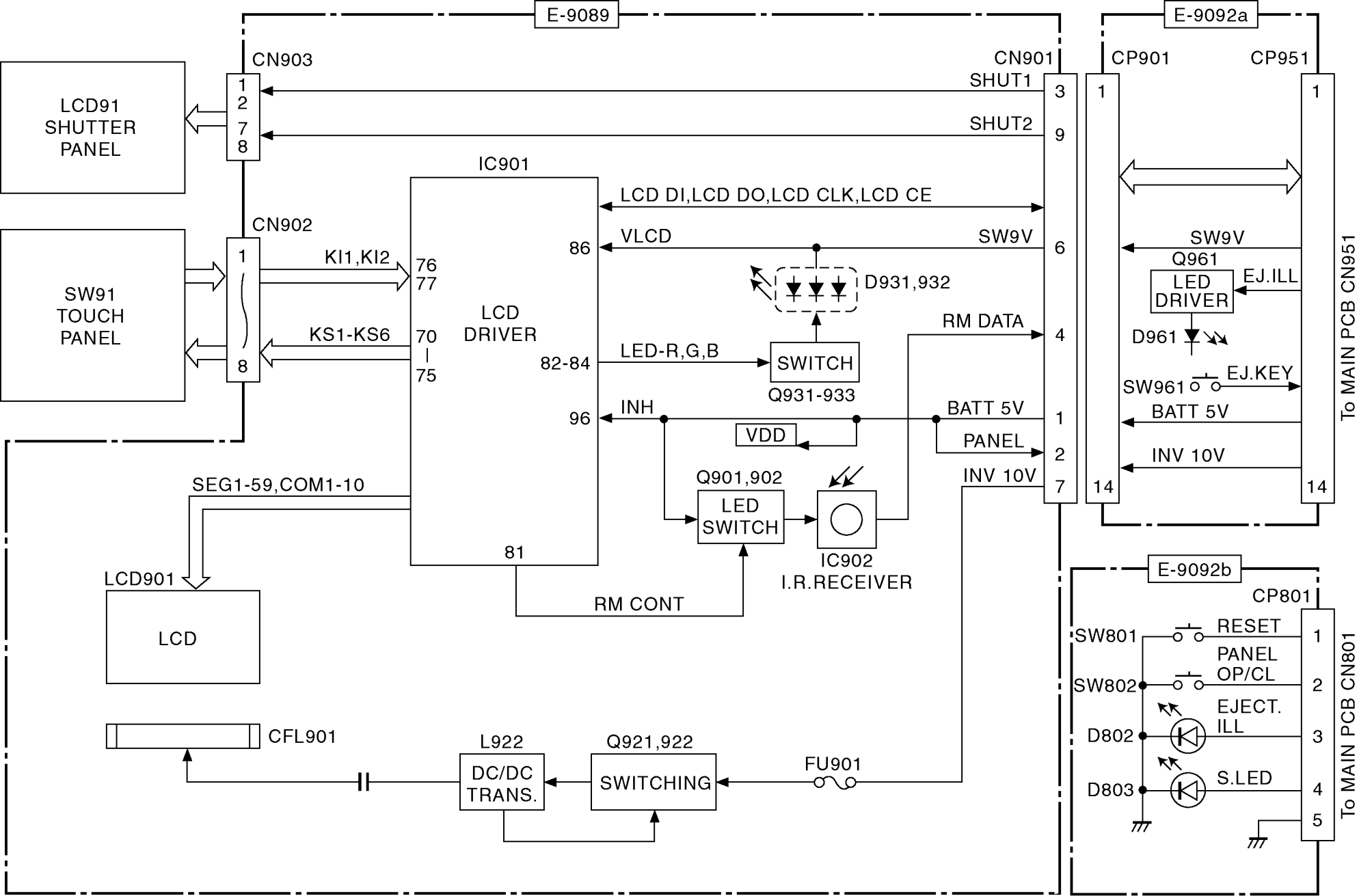
E-9089
E-9092a
E-9092b
CN903
CN901
CP901
CP951
CP801
LCD91 SHUTTER PANEL
SW91 TOUCH PANEL
CN902
SHUT1
SHUT2
IC901
LCD DI,LCD DO,LCD CLK,LCD CE
VLCD
SW9V
KI1,KI2
KS1-KS6
LCD DRIVER
D931,932
RM DATA
LED-R,G,B
SWITCH
Q931-933
INH
BATT 5V
VDD
PANEL
INV 10V
SEG1-59,COM1-10
Q901,902
LED SWITCH
IC902
I.R.RECEIVER
RM CONT
LCD901
LCD
CFL901
L922
DC/DC TRANS.
Q921,922
SWITCHING
FU901
Q961
LED DRIVER
EJ.ILL
D961
SW961
EJ.KEY
To MAIN PCB CN951
SW801
RESET
SW802
PANEL OP/CL
D802
EJECT. ILL
D803
S.LED
To MAIN PCB CN801

17 BLOCK DIAGRAM

17.1. Main Block

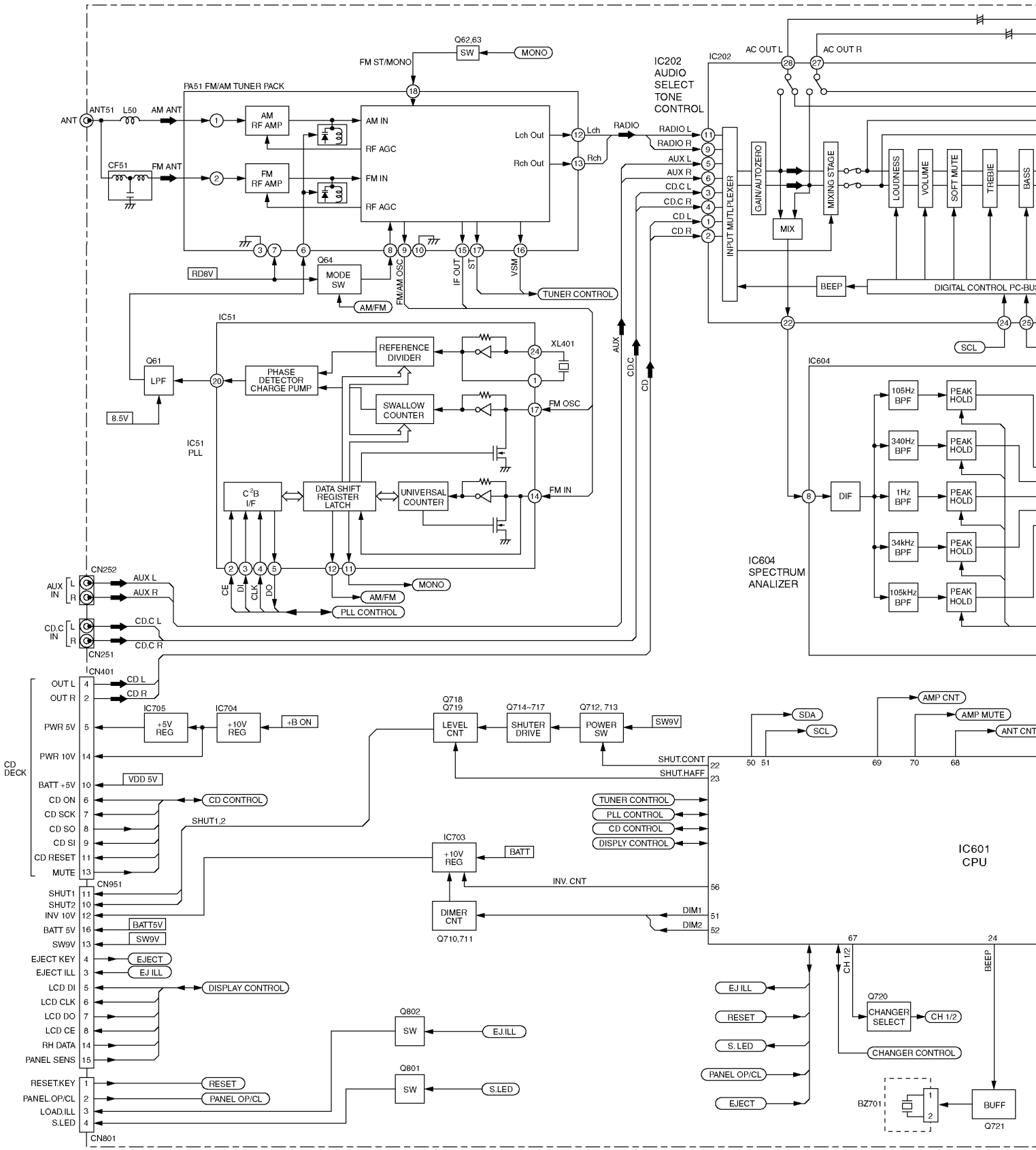

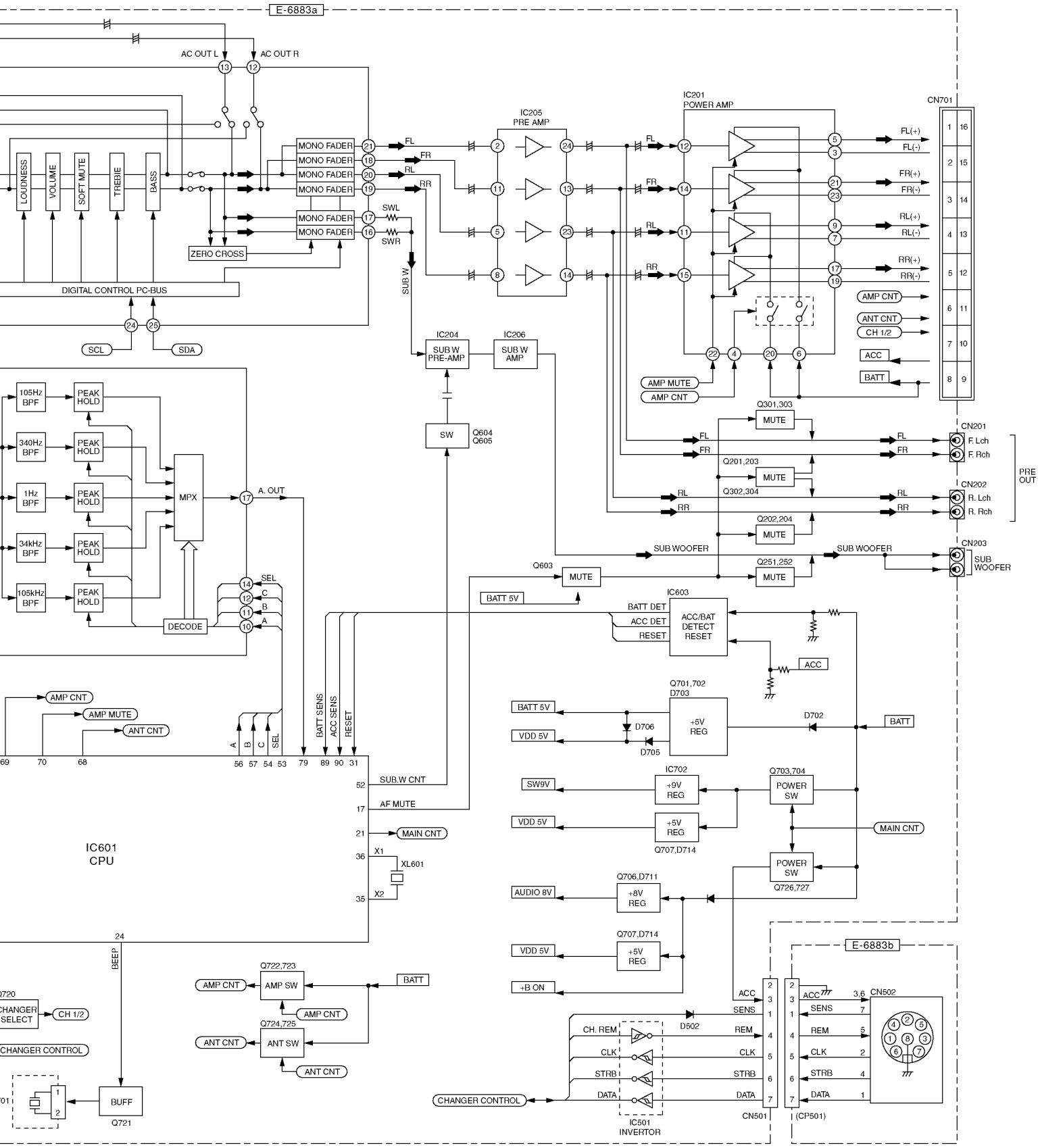

CQ-DF802U Main Block

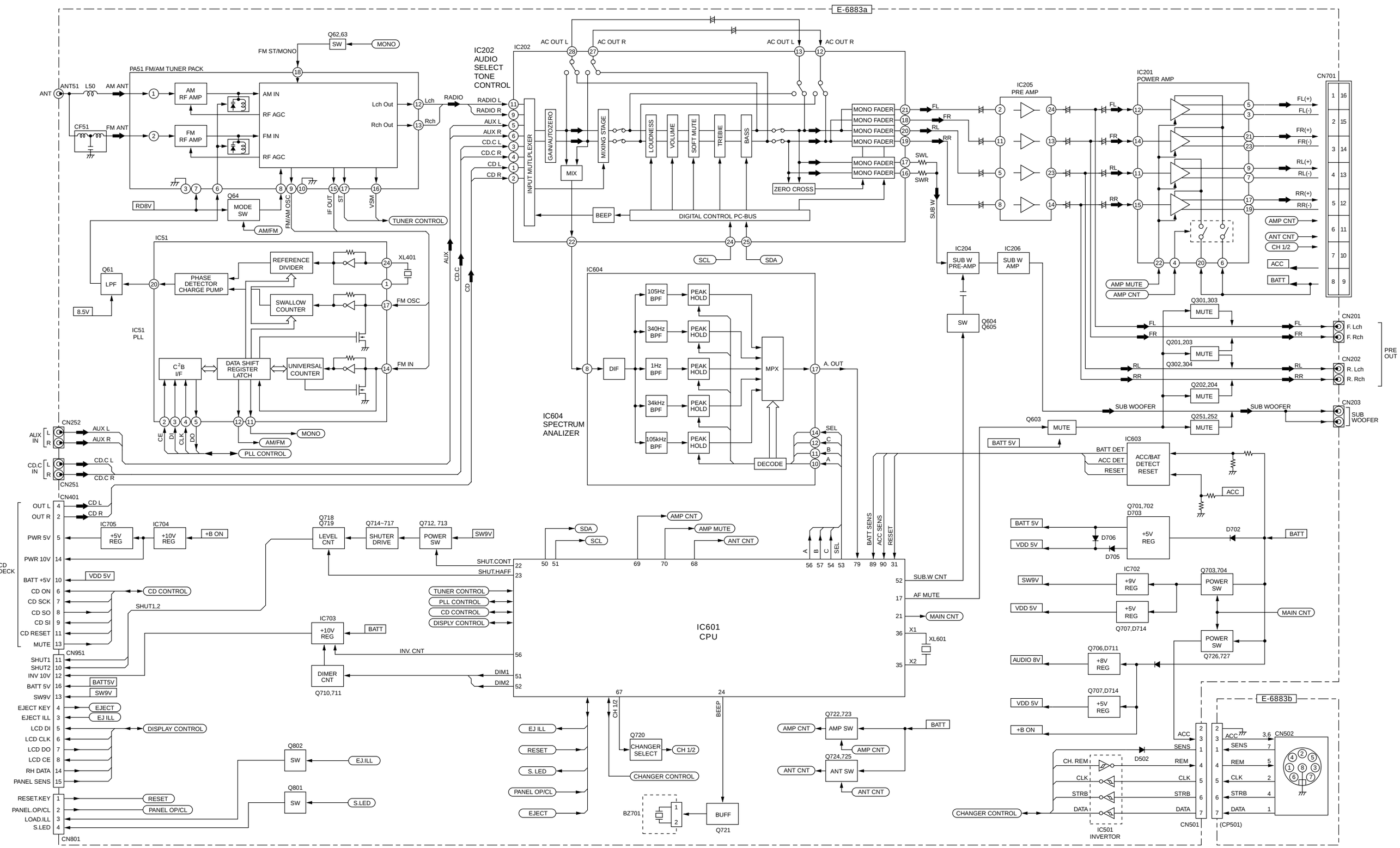

CQ-DF802U Main Block

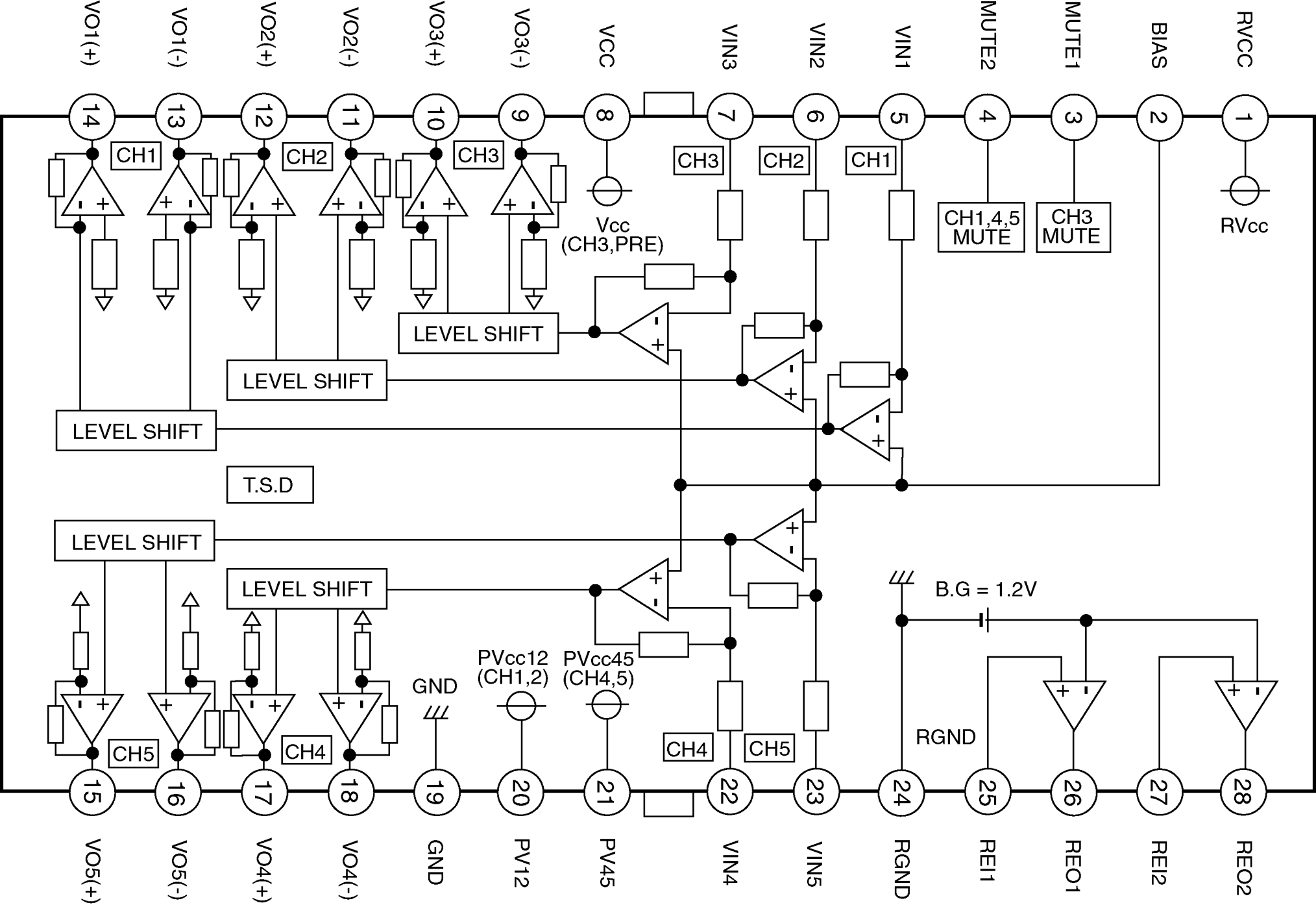
VO1(+)
VO1(-)
VO2(+)
VO2(-)
VO3(+)
VO3(-)
VCC
VIN3
VIN2
VIN1
MUTE2
MUTE1
BIAS
RVCC
14
13
12
11
10
9
8
7
6
5
4
3
2
1
CH1
CH2
CH3
CH3
CH2
CH1
Vcc
(CH3,PRE)
CH1,4,5
MUTE
CH3
MUTE
RVcc
LEVEL SHIFT
LEVEL SHIFT
LEVEL SHIFT
T.S.D
LEVEL SHIFT
LEVEL SHIFT
B.G = 1.2V
PVcc12
(CH1,2)
PVcc45
(CH4,5)
GND
CH5
CH4
CH4
CH5
RGND
15
16
17
18
19
20
21
22
23
24
25
26
27
28
VO5(+)
VO5(-)
VO4(+)
VO4(-)
GND
PV12
PV45
VIN4
VIN5
RGND
REI1
REO1
REI2
REO2

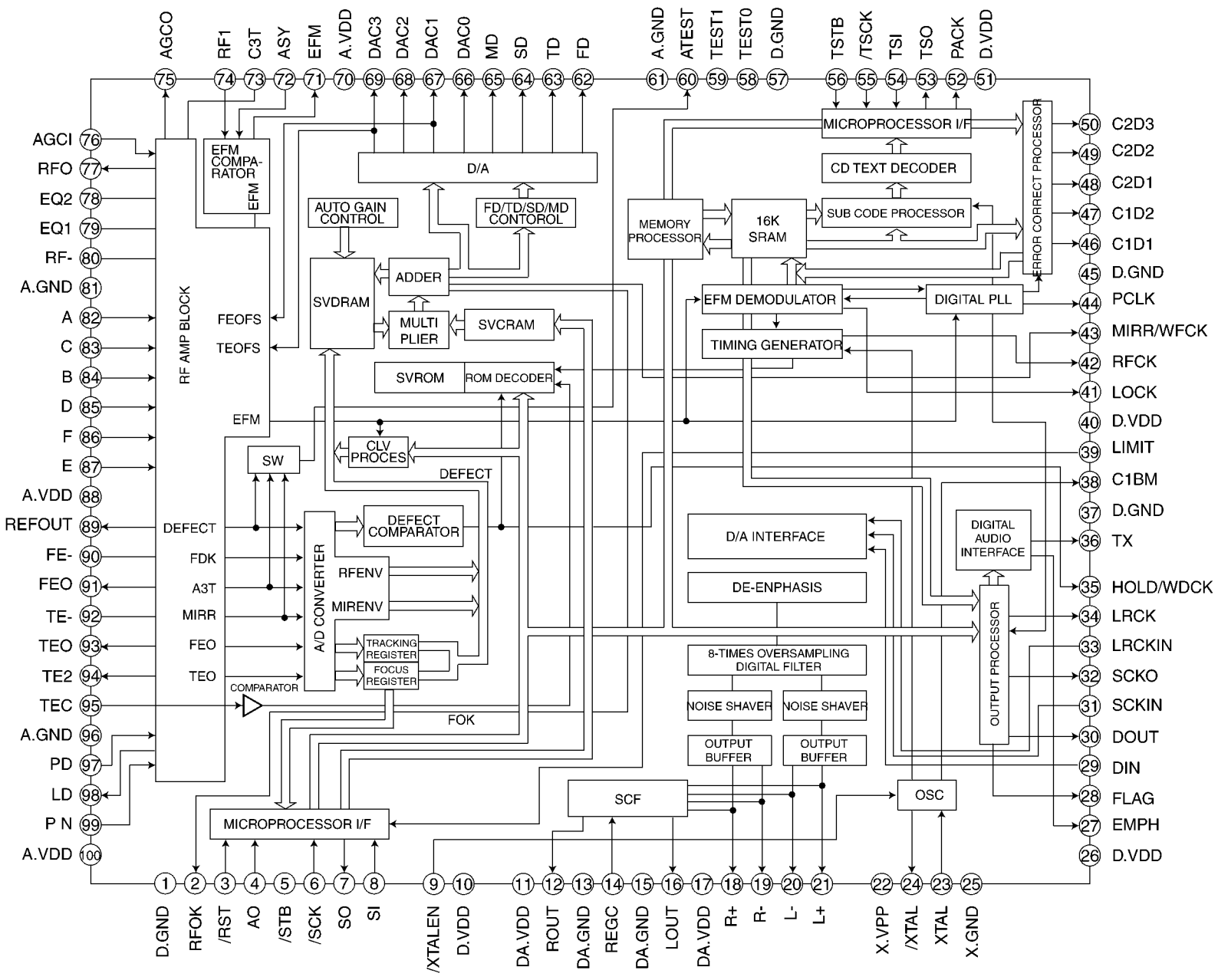
AGCO 75
RF1 74
C3T 73
ASY 72
EFM 71
A.VDD 70
DAC3 69
DAC2 68
DAC1 67
DAC0 66
MD 65
SD 64
TD 63
FD 62
A.GND 61
ATEST 60
TEST1 59
TEST0 58
D.GND 57
TSTB 56
/TSCK 55
TSI 54
TSO 53
PACK 52
D.VDD 51
AGCI 76
RFO 77
EQ2 78
EQ1 79
RF- 80
A.GND 81
A 82
C 83
B 84
D 85
F 86
E 87
A.VDD 88
REFOUT 89
FE- 90
FEO 91
TE- 92
TEO 93
TE2 94
TEC 95
A.GND 96
PD 97
LD 98
P N 99
A.VDD 100
C2D3 50
C2D2 49
C2D1 48
C1D2 47
C1D1 46
D.GND 45
PCLK 44
MIRR/WFCK 43
RFCK 42
LOCK 41
D.VDD 40
LIMIT 39
C1BM 38
D.GND 37
TX 36
HOLD/WDCK 35
LRCK 34
LRCKIN 33
SCKO 32
SCKIN 31
DOUT 30
DIN 29
FLAG 28
EMPH 27
D.VDD 26
D.GND 1
RFOK 2
/RST 3
AO 4
/STB 5
/SCK 6
SO 7
SI 8
/XTALEN 9
D.VDD 10
DA.VDD 11
ROUT 12
DA.GND 13
REGC 14
DA.GND 15
LOUT 16
DA.VDD 17
R+ 18
R- 19
L- 20
L+ 21
X.VPP 22
/XTAL 24
XTAL 23
X.GND 25
RF AMP BLOCK
EFM COMPA-RATOR
EFM
FEOFS
TEOFS
EFM
DEFECT
FDK
A3T
MIRR
FEO
TEO
COMPARATOR
FOK
D/A
AUTO GAIN CONTROL
FD/TD/SD/MD CONTOROL
SVDRAM
ADDER
MULTI PLIER
SVCRAM
SVROM
ROM DECODER
SW
CLV PROCES
DEFECT
DEFECT COMPARATOR
A/D CONVERTER
RFENV
MIRENV
TRACKING REGISTER
FOCUS REGISTER
MICROPROCESSOR I/F
MEMORY PROCESSOR
16K SRAM
MICROPROCESSOR I/F
CD TEXT DECODER
SUB CODE PROCESSOR
ERROR CORRECT PROCESSOR
EFM DEMODULATOR
DIGITAL PLL
TIMING GENERATOR
D/A INTERFACE
DE-ENPHASIS
DIGITAL AUDIO INTERFACE
OUTPUT PROCESSOR
8-TIMES OVERSAMPLING DIGITAL FILTER
NOISE SHAVER
NOISE SHAVER
OUTPUT BUFFER
OUTPUT BUFFER
SCF
OSC
MICROPROCESSOR I/F

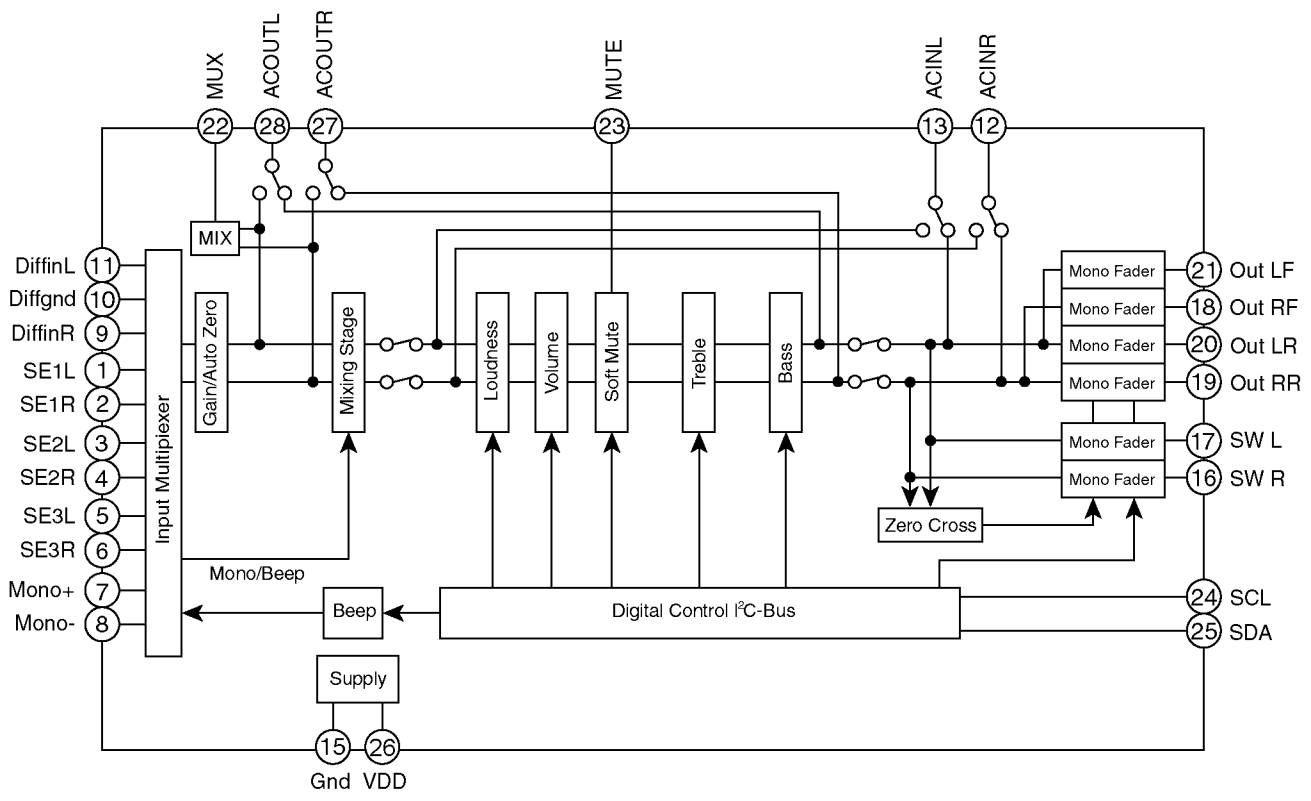
MUX
ACOUTL
ACOUTR
MUTE
ACINL
ACINR
22
28
27
23
13
12
MIX
DiffinL
Diffgnd
DiffinR
SE1L
SE1R
SE2L
SE2R
SE3L
SE3R
Mono+
Mono-
11
10
9
1
2
3
4
5
6
7
8
Input Multipiexer
Gain/Auto Zero
Mixing Stage
Loudness
Volume
Soft Mute
Treble
Bass
Mono Fader
Mono Fader
Mono Fader
Mono Fader
Mono Fader
Mono Fader
21
18
20
19
17
16
Out LF
Out RF
Out LR
Out RR
SW L
SW R
Zero Cross
Mono/Beep
Beep
Digital Control I²C-Bus
24
25
SCL
SDA
Supply
15
26
Gnd
VDD

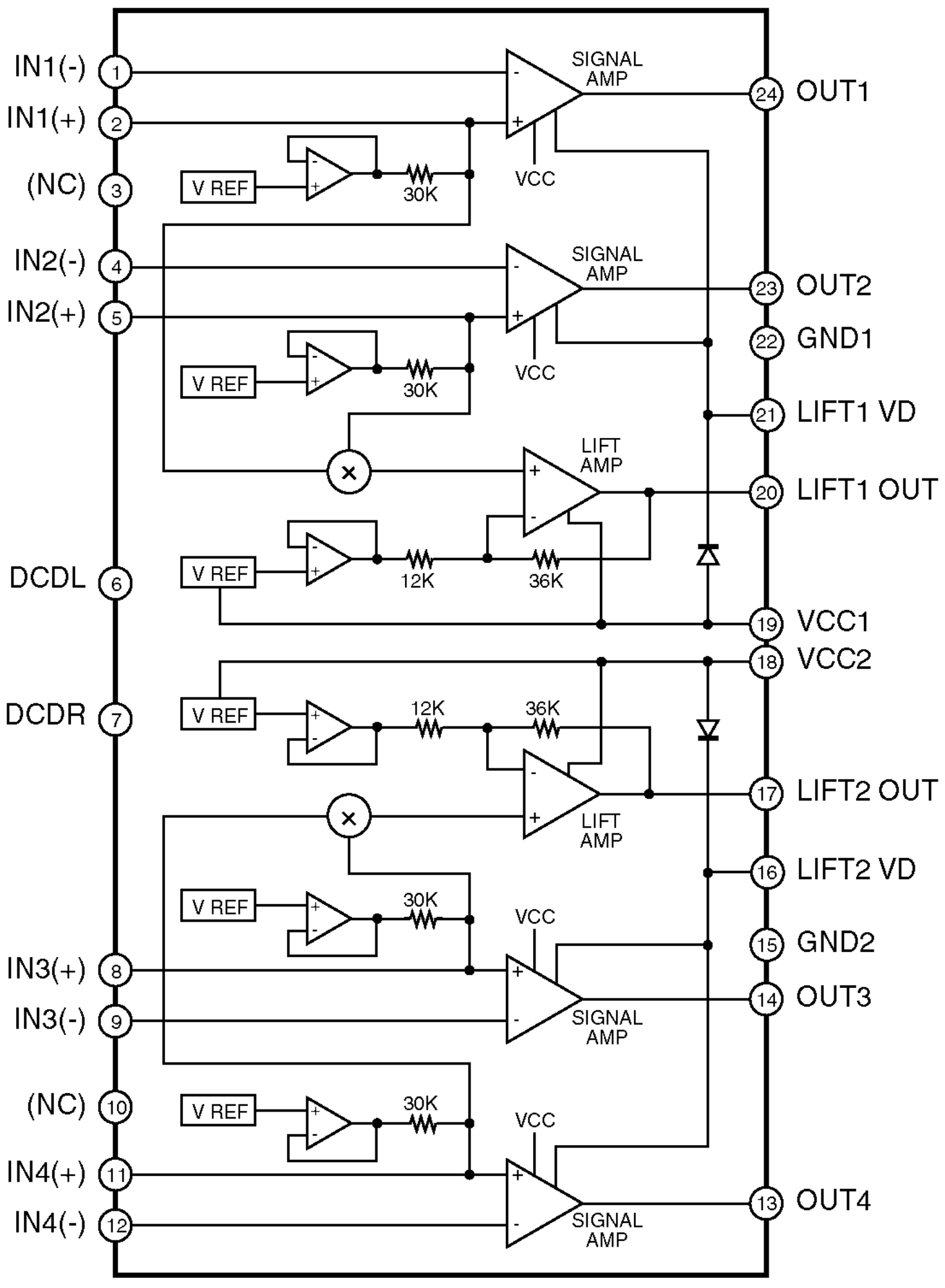
IN1(-)
1
IN1(+)
2
(NC)
3
IN2(-)
4
IN2(+)
5
DCDL
6
DCDR
7
IN3(+)
8
IN3(-)
9
(NC)
10
IN4(+)
11
IN4(-)
12
SIGNAL AMP
VCC
V REF
30K
LIFT AMP
12K
36K
24
OUT1
23
OUT2
22
GND1
21
LIFT1 VD
20
LIFT1 OUT
19
VCC1
18
VCC2
17
LIFT2 OUT
16
LIFT2 VD
15
GND2
14
OUT3
13
OUT4

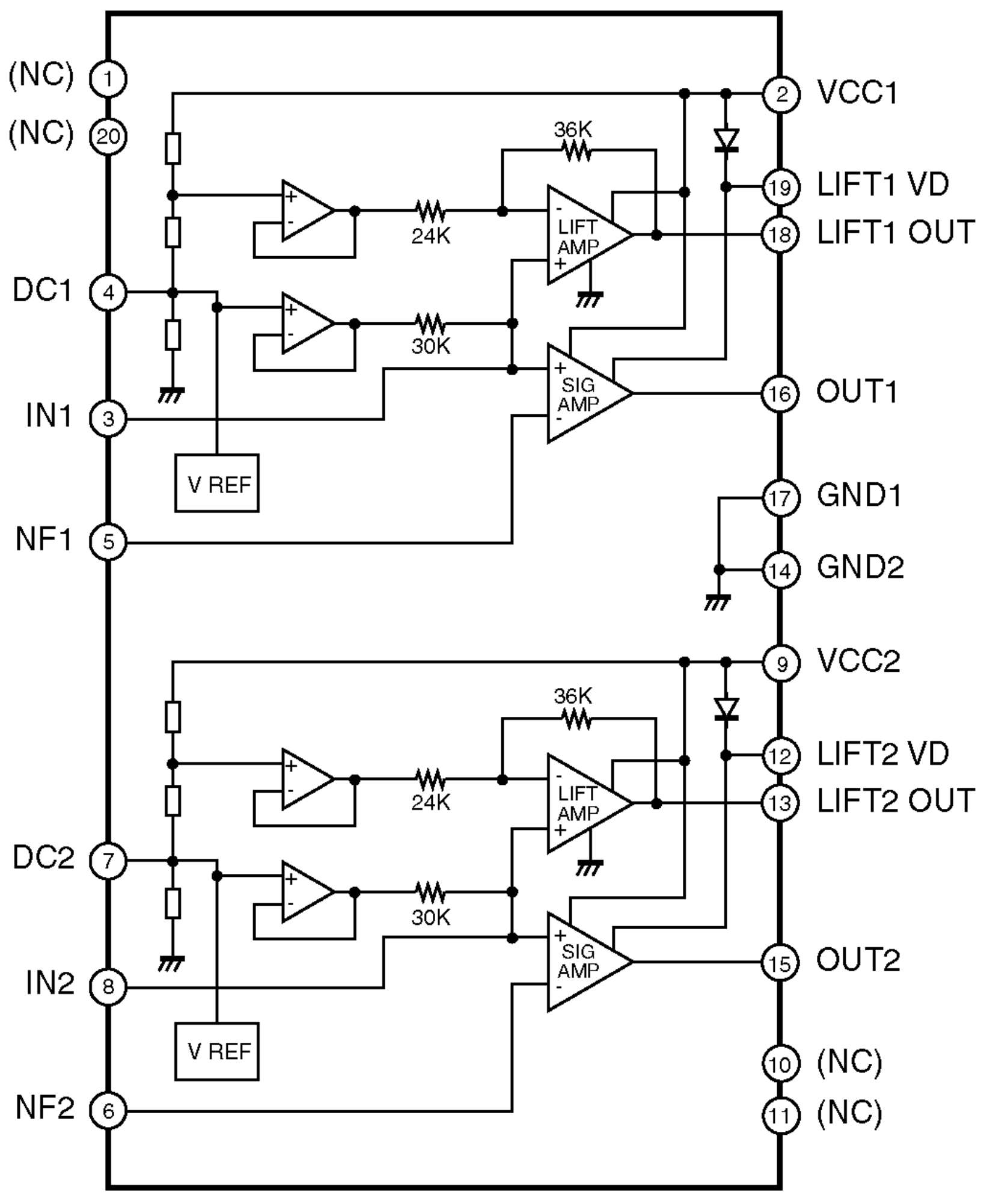
(NC) 1
(NC) 20
DC1 4
IN1 3
NF1 5
DC2 7
IN2 8
NF2 6
2 VCC1
19 LIFT1 VD
18 LIFT1 OUT
16 OUT1
17 GND1
14 GND2
9 VCC2
12 LIFT2 VD
13 LIFT2 OUT
15 OUT2
10 (NC)
11 (NC)
36K
24K
30K
LIFT AMP
SIG AMP
V REF
36K
24K
30K
LIFT AMP
SIG AMP
V REF

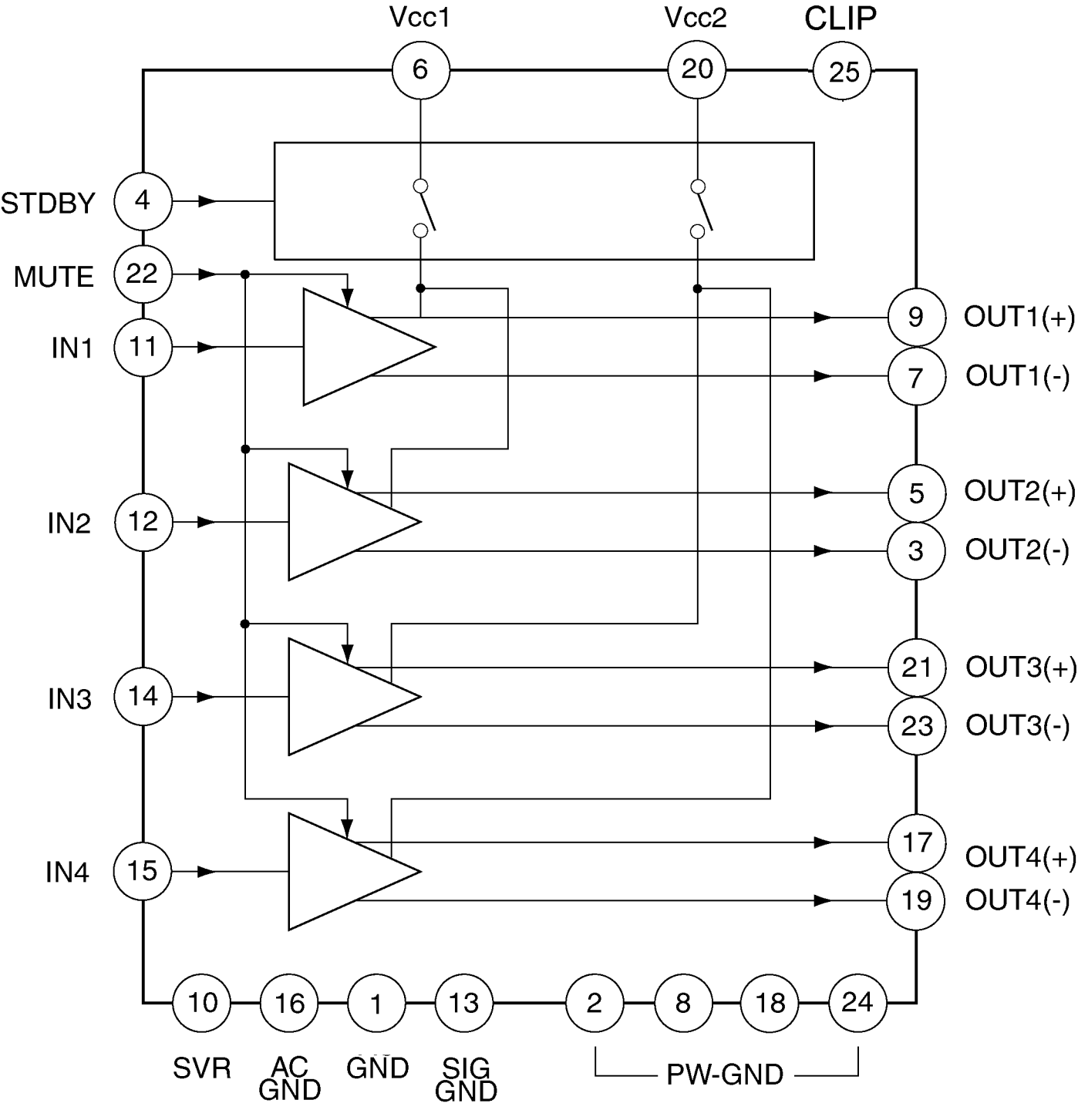
Vcc1
Vcc2
CLIP
6
20
25
STDBY
4
MUTE
22
IN1
11
IN2
12
IN3
14
IN4
15
9
OUT1(+)
7
OUT1(-)
5
OUT2(+)
3
OUT2(-)
21
OUT3(+)
23
OUT3(-)
17
OUT4(+)
19
OUT4(-)
10
16
1
13
2
8
18
24
SVR
AC GND
GND
SIG GND
PW-GND

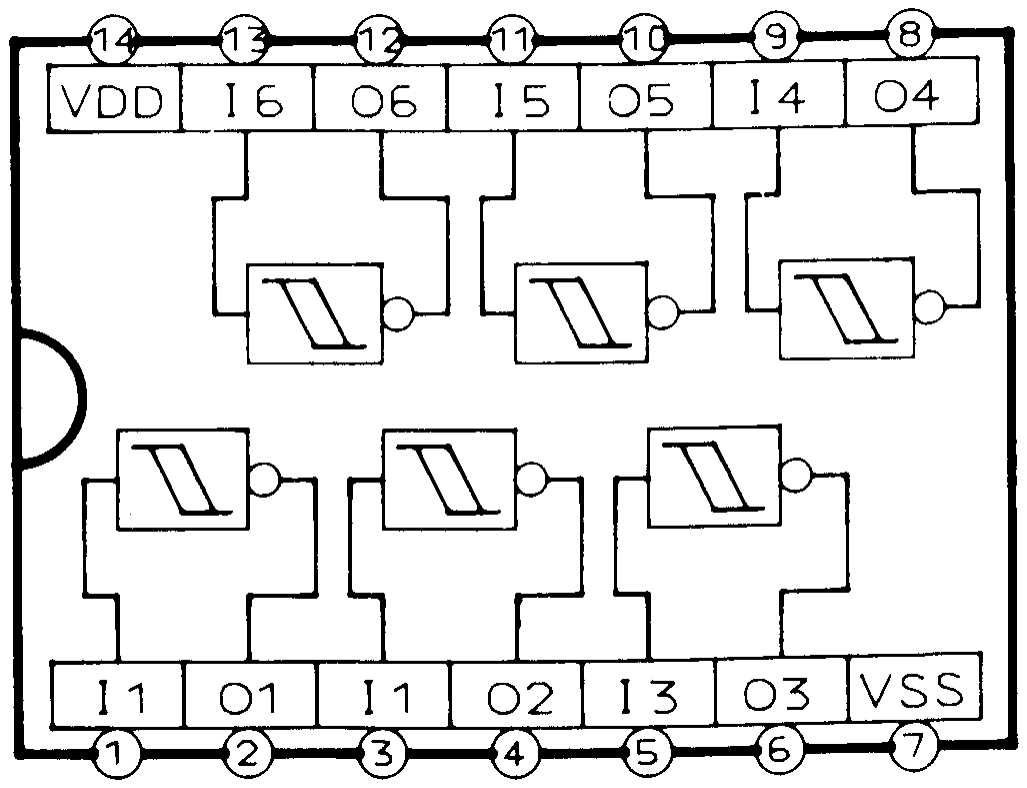
14
13
12
11
10
9
8
VDD
I6
O6
I5
O5
I4
O4
I1
O1
I1
O2
I3
O3
VSS
1
2
3
4
5
6
7

16.3. CD Servo Block

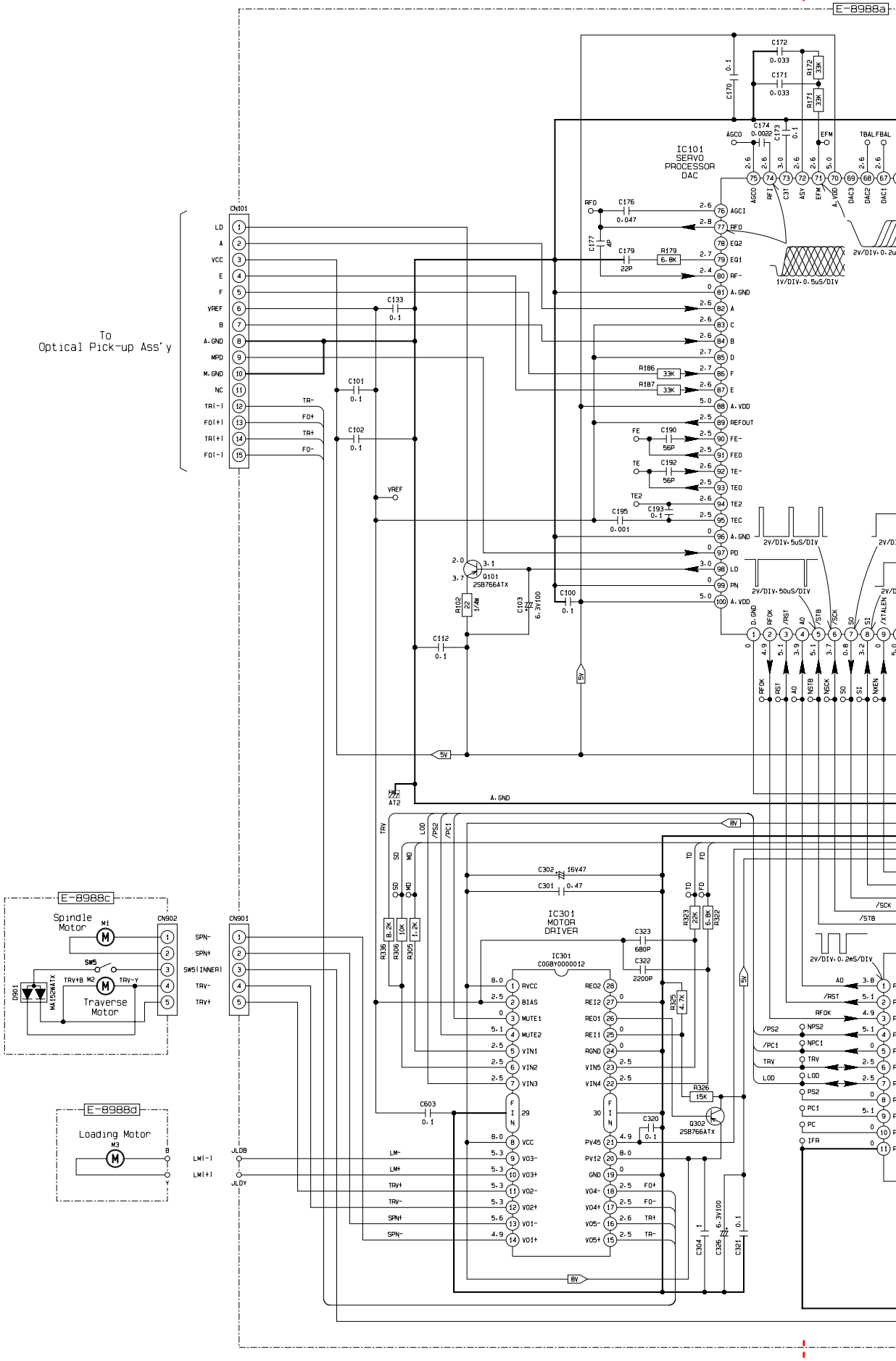

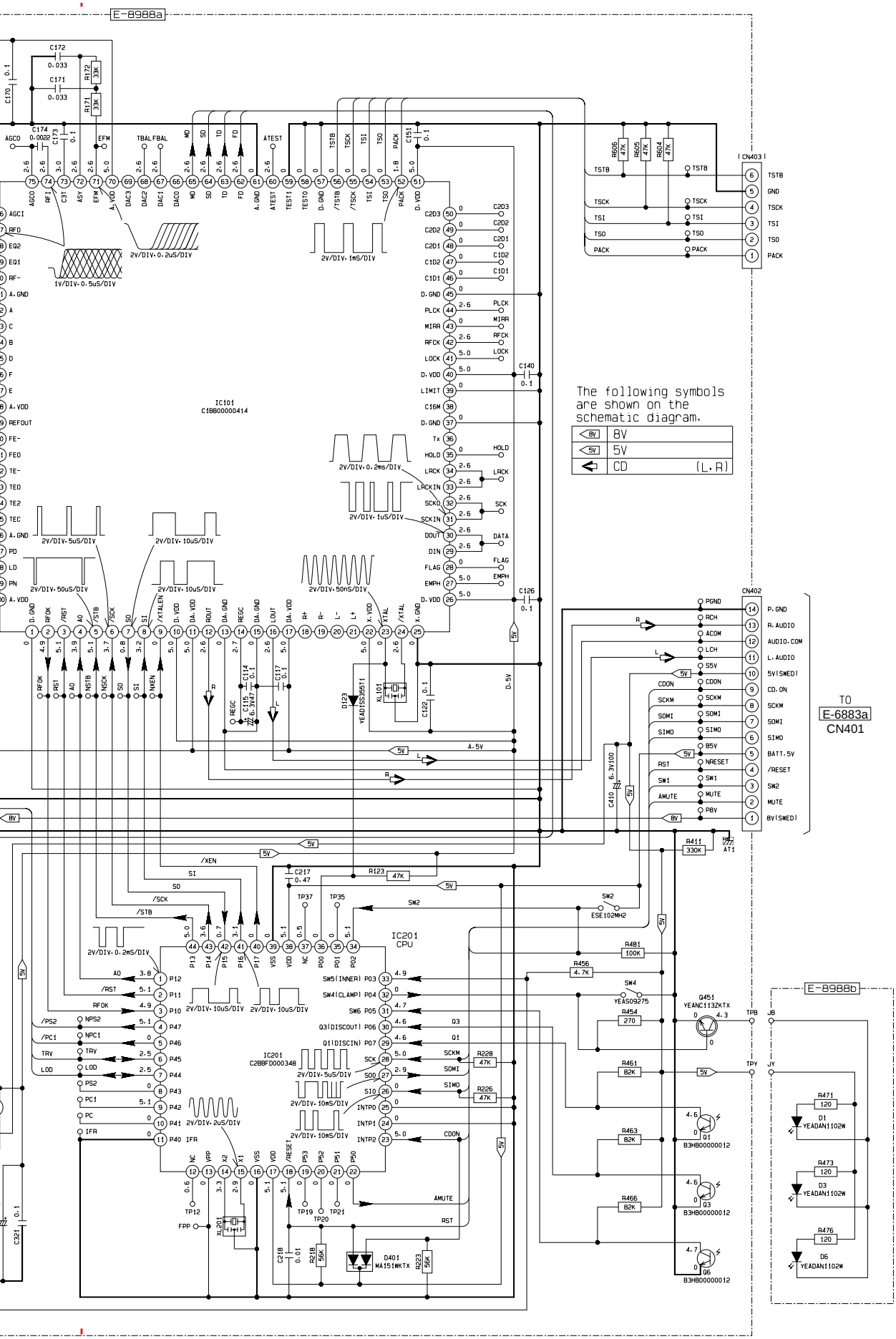
E-8988a
IC101
C1BB00000414
IC201
CPU
C2BBFD000348
CN403
CN402
TO
E-6883a
CN401
E-8988b
The following symbols
are shown on the
schematic diagram.
8V
5V
CD (L.R)

16.2. Display Block

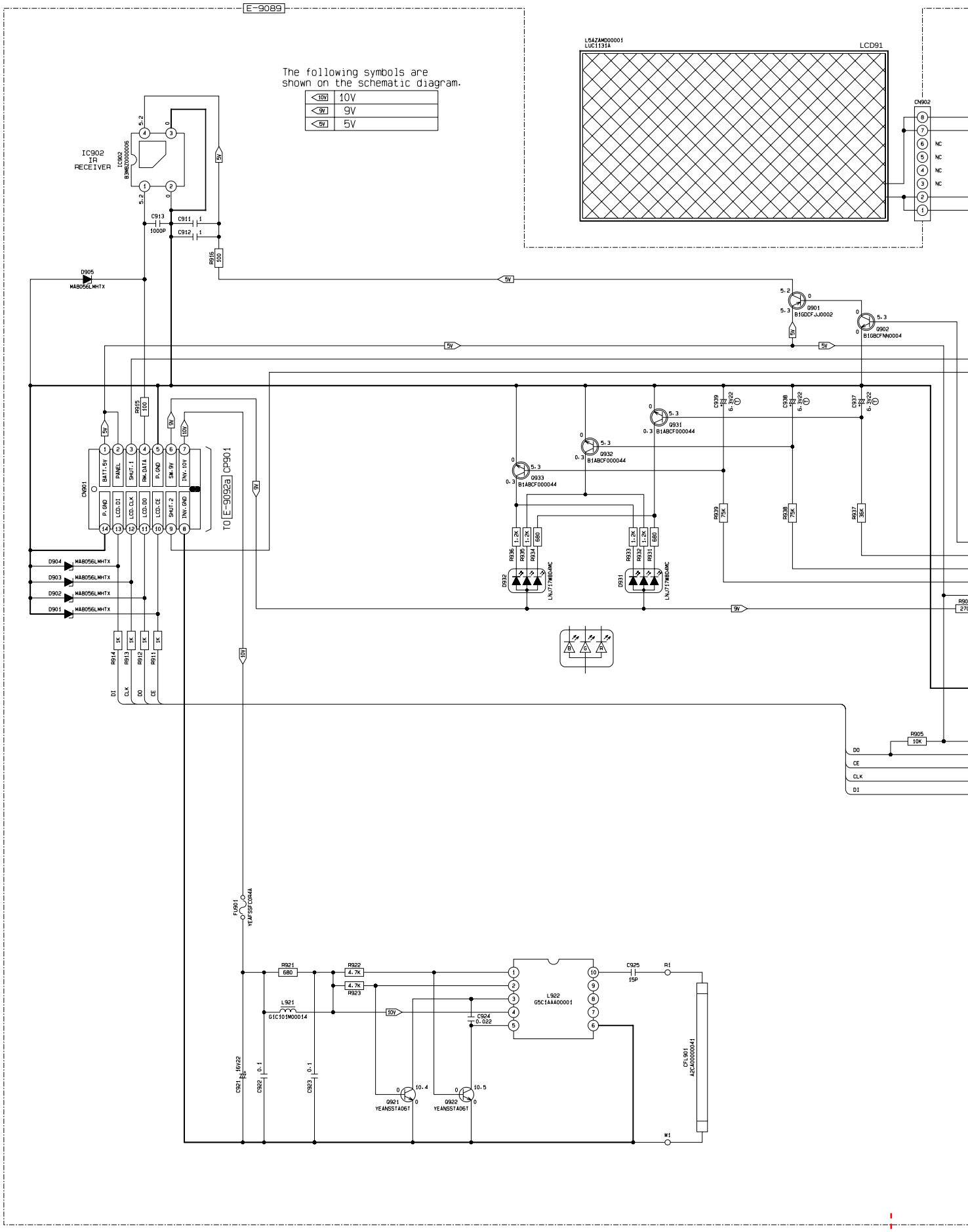

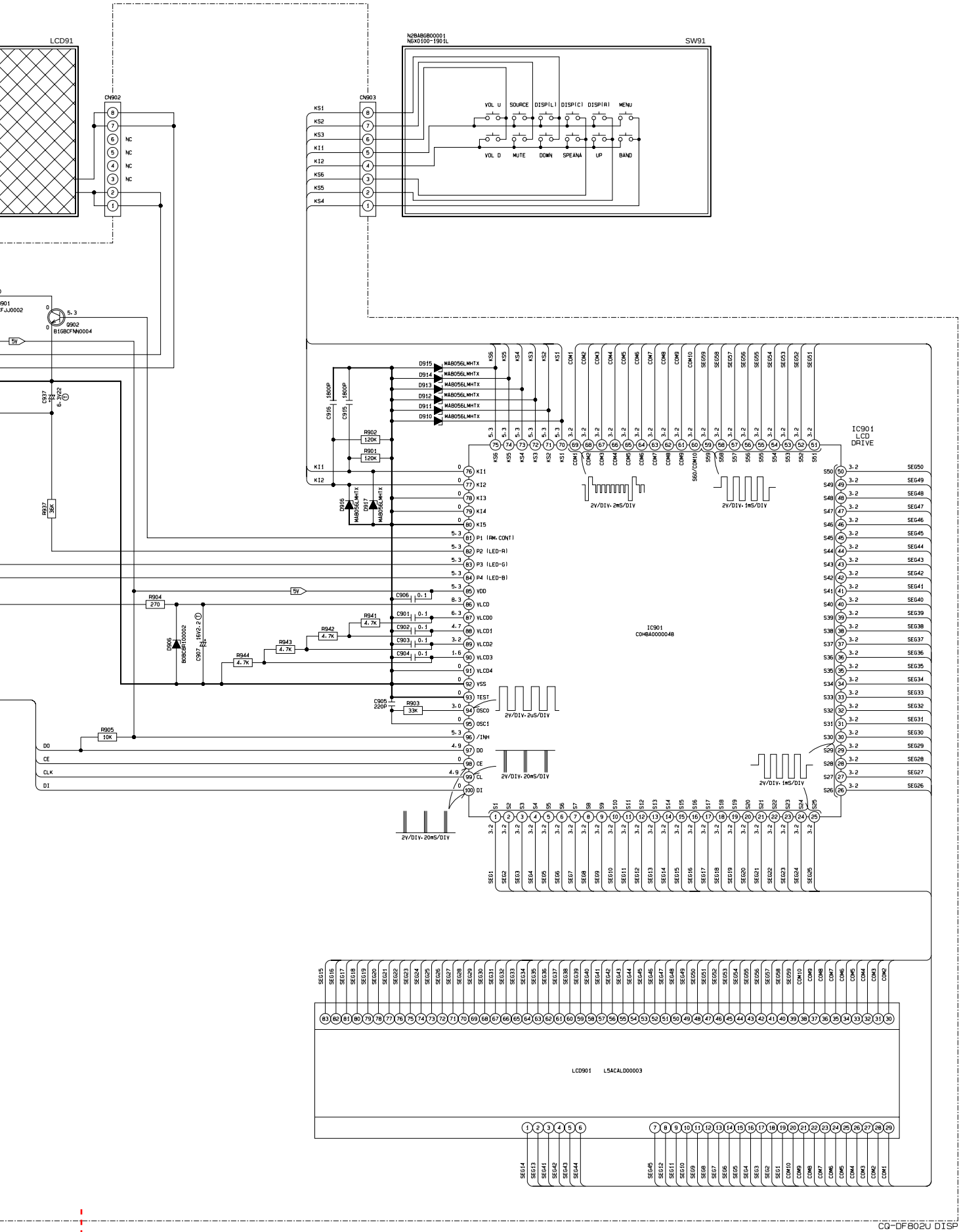
LCD91
CN902
CN903
SW91
N2BAB6B00001
N6X0100-1901L
VOL U
SOURCE
DISP(L)
DISP(C)
DISP(R)
MENU
VOL D
MUTE
DOWN
SPEANA
UP
BAND
IC901
LCD
DRIVE
IC901
C0HBA0000048
LCD901 L5ACALD00003
CQ-DF802U DISP

Printed in Japan (K)
2002.1
(Recycled Paper)

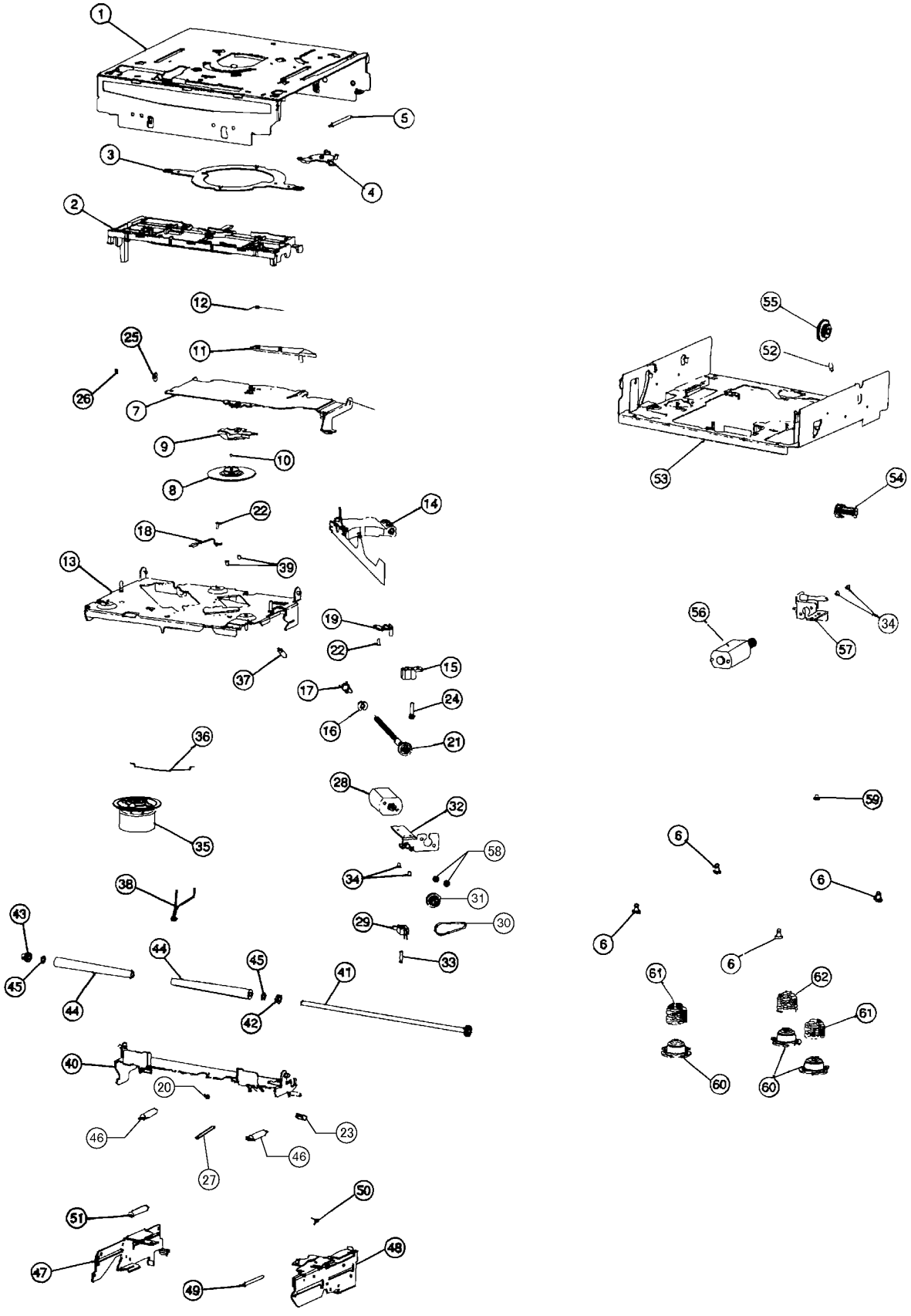
1
5
3
4
2
12
25
11
26
7
9
10
8
22
14
18
39
13
19
22
37
15
17
24
16
21
36
28
32
35
58
34
31
38
29
30
43
33
44
45
45
41
44
42
40
20
46
23
46
27
50
51
47
48
49
55
52
53
54
56
34
57
59
6
6
6
6
61
62
61
60
60

NCD8
'01.12

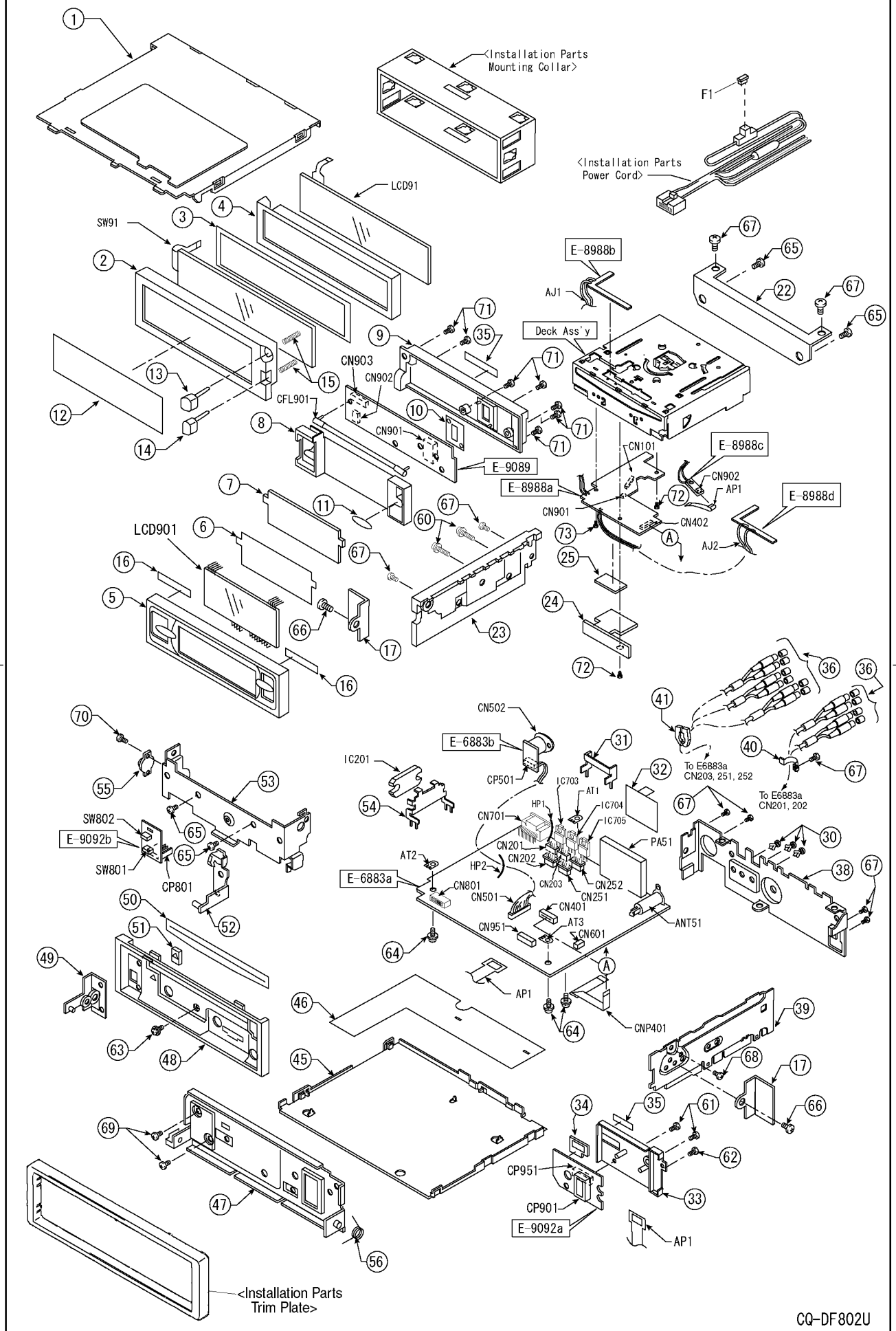
1
<Installation Parts Mounting Collar>
F1
<Installation Parts Power Cord>
LCD91
SW91
3
4
2
67
65
E-8988b
AJ1
22
67
65
71
35
9
Deck Ass'y
71
CN903
CN902
13
15
CFL901
10
12
8
CN901
71
71
14
E-9089
CN101
E-8988c
CN902
AP1
E-8988a
72
E-8988d
7
11
67
CN901
CN402
60
73
A
AJ2
LCD901
6
67
25
16
5
66
17
23
24
16
72
36
36
41
70
CN502
E-6883b
31
40
To E6883a CN203, 251, 252
67
IC201
CP501
32
55
53
54
IC703
AT1
To E6883a CN201, 202
67
HP1
IC704
SW802
CN701
IC705
30
E-9092b
65
65
CN201
PA51
AT2
CN202
HP2
38
67
SW801
CP801
E-6883a
CN801
CN203
CN252
CN501
CN251
CN401
50
52
AT3
ANT51
51
CN951
CN601
1
64
A
49
AP1
46
64
CNP401
39
63
48
45
68
17
35
61
66
34
69
62
CP951
33
47
CP901
E-9092a
AP1
56
<Installation Parts Trim Plate>

CQ-DF802U

A B

CAUTION:

This product utilizes a laser diode with the unit turned "on", laser radiation is emitted from the pickup lens.

Laser radiation from the pickup lens is safety level, but be sure the followings:

1. Do not disassemble the optical pickup unit, since radiation from exposed laser diode is dangerous.
2. Do not adjust the variable resistor on the pickup unit. It was already adjusted.
3. Do not look at the focus lens using optical instruments.
4. Recommend not to look at pickup lens for a long time.

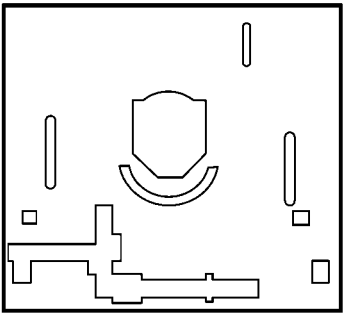

Deck Ass'y (Upper Side)

Caution

This Product utilizes a laser.

Use of controls or adjustments or performance of procedures other than those specified herein may result in hazardous radiation exposure.

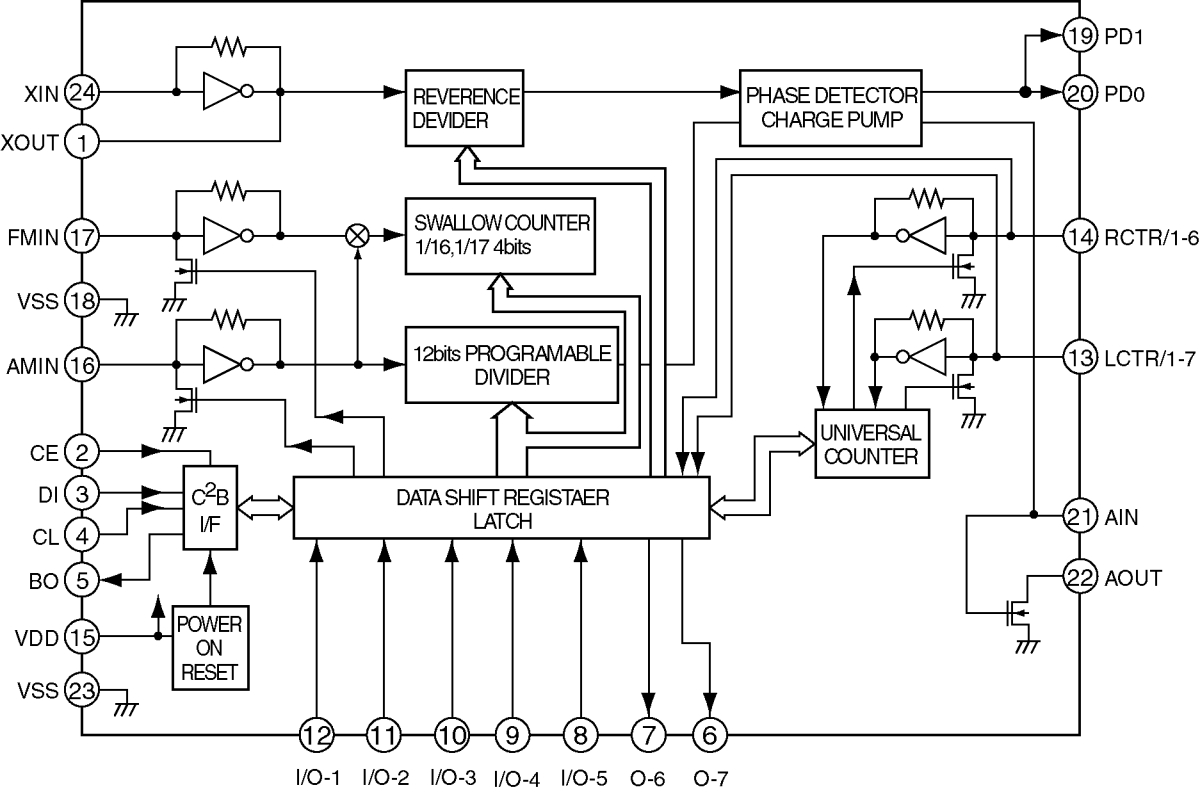
XIN 24
XOUT 1
FMIN 17
VSS 18
AMIN 16
CE 2
DI 3
CL 4
BO 5
VDD 15
VSS 23
REVERENCE DEVIDER
PHASE DETECTOR CHARGE PUMP
SWALLOW COUNTER 1/16,1/17 4bits
12bits PROGRAMABLE DIVIDER
UNIVERSAL COUNTER
C2B I/F
DATA SHIFT REGISTAER LATCH
POWER ON RESET
19 PD1
20 PD0
14 RCTR/1-6
13 LCTR/1-7
21 AIN
22 AOUT
12 I/O-1
11 I/O-2
10 I/O-3
9 I/O-4
8 I/O-5
7 O-6
6 O-7

16 SCHEMATIC DIAGRAM

16.1. Main Block

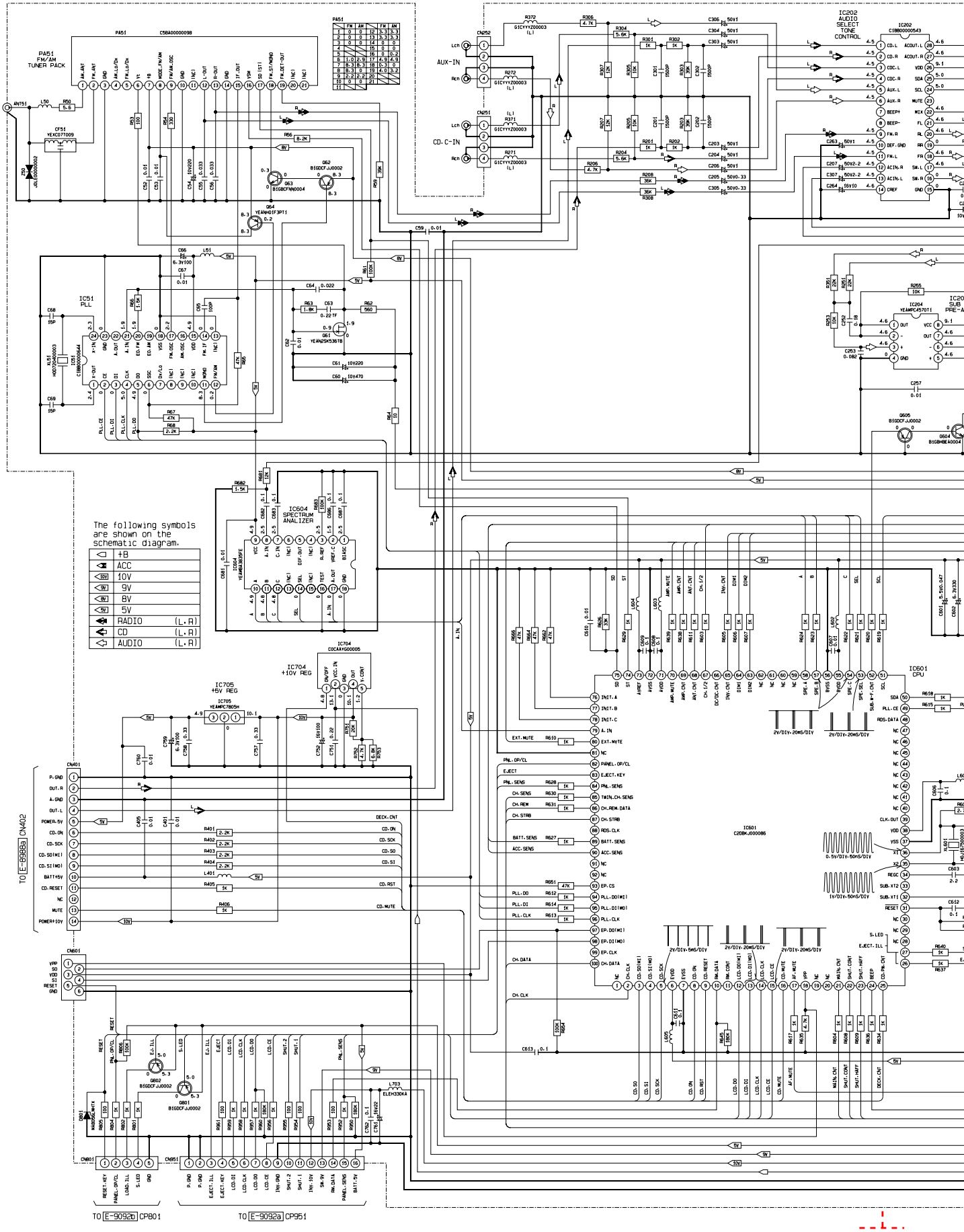

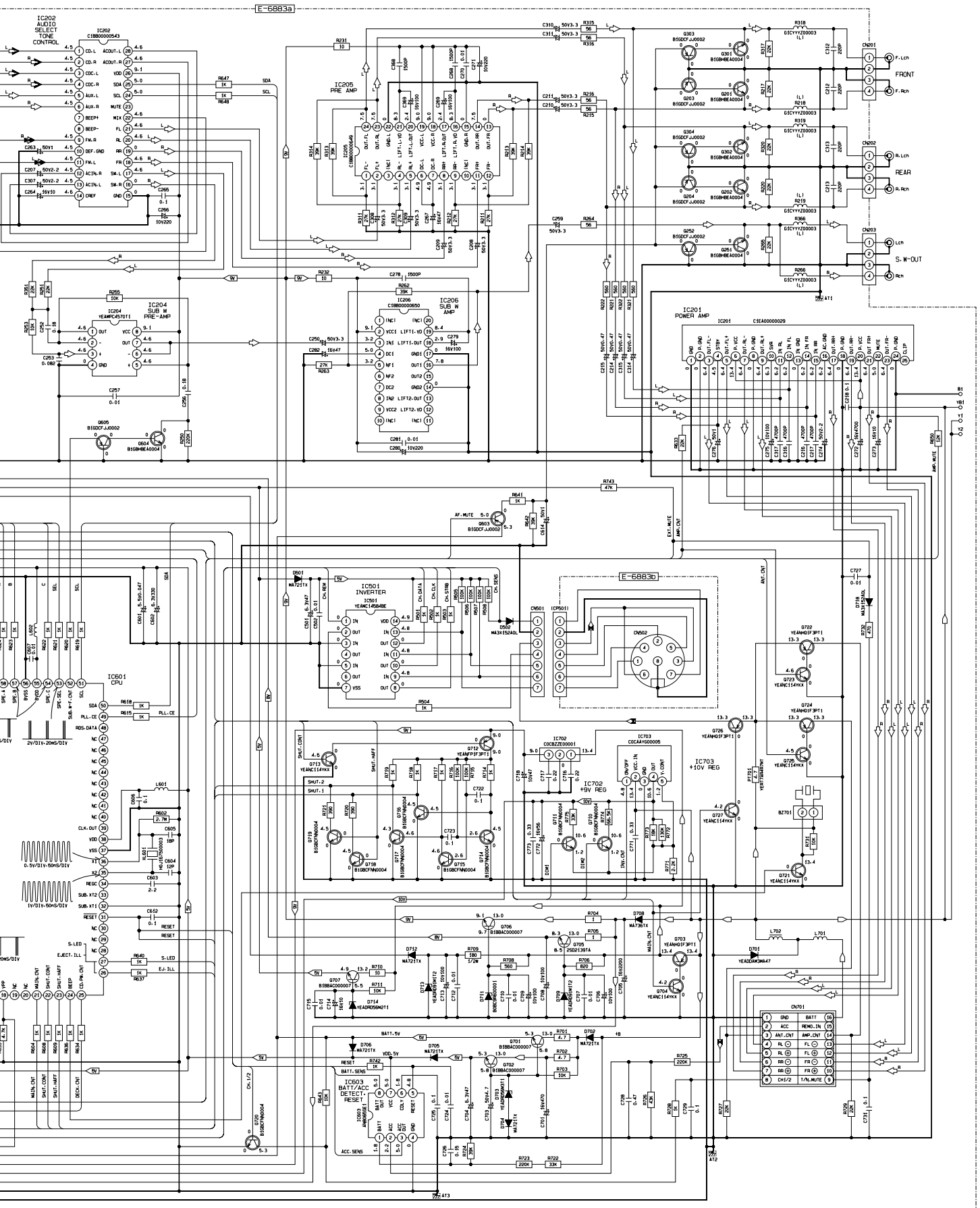
E-6883a
IC202
AUDIO
SELECT
TONE
CONTROL
IC205
PRE AMP
IC204
SUB W
PRE-AMP
IC206
SUB W
AMP
IC201
POWER AMP
FRONT
REAR
S. W-OUT
E-6883b
IC501
INVERTER
IC601
CPU
IC702
+9V REG
IC703
+10V REG
IC603
BATT/ACC
DETECT.
RESET
CN701
CQ-DF802U
MAIN

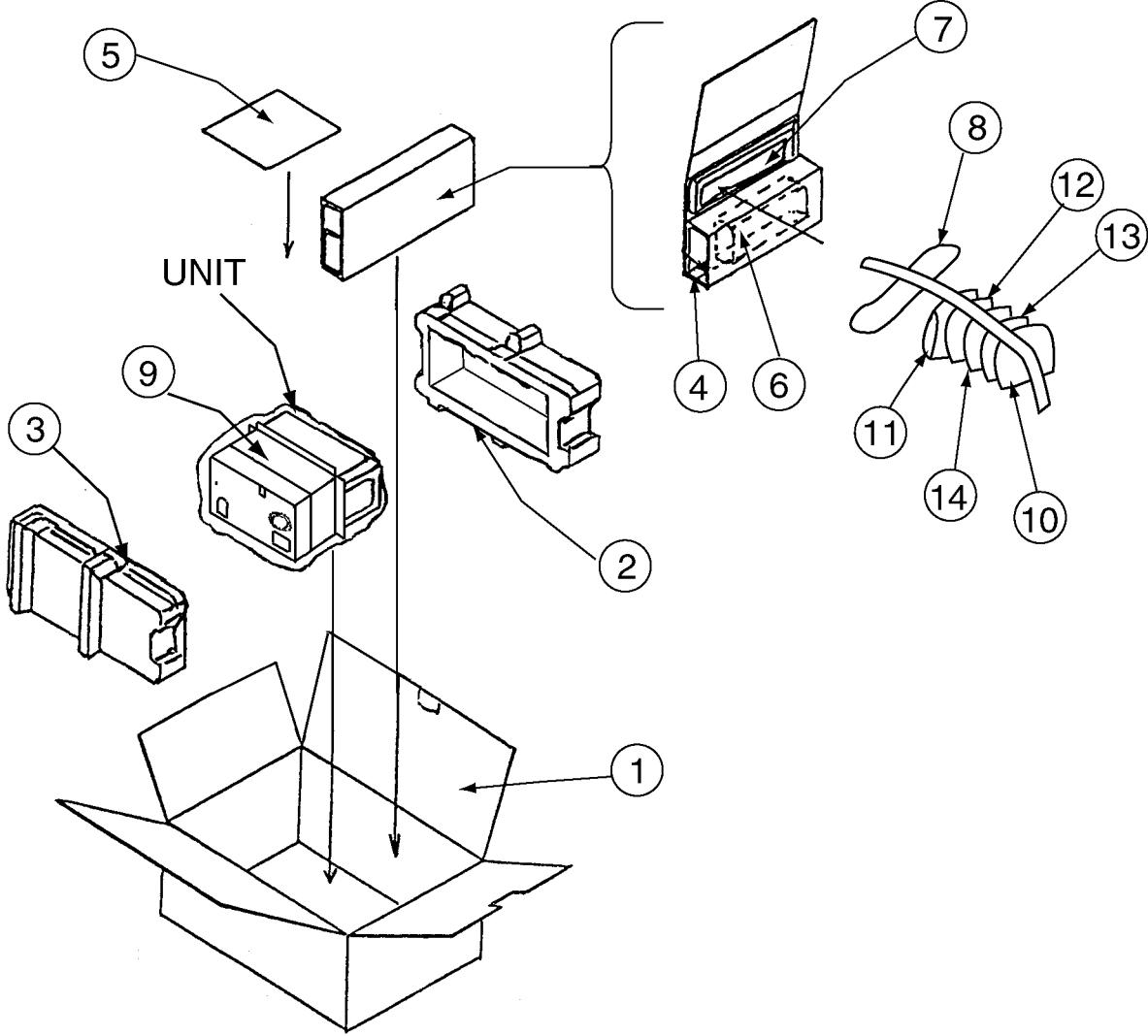
5
7
8
12
13
UNIT
9
3
4
6
11
14
10
2
1

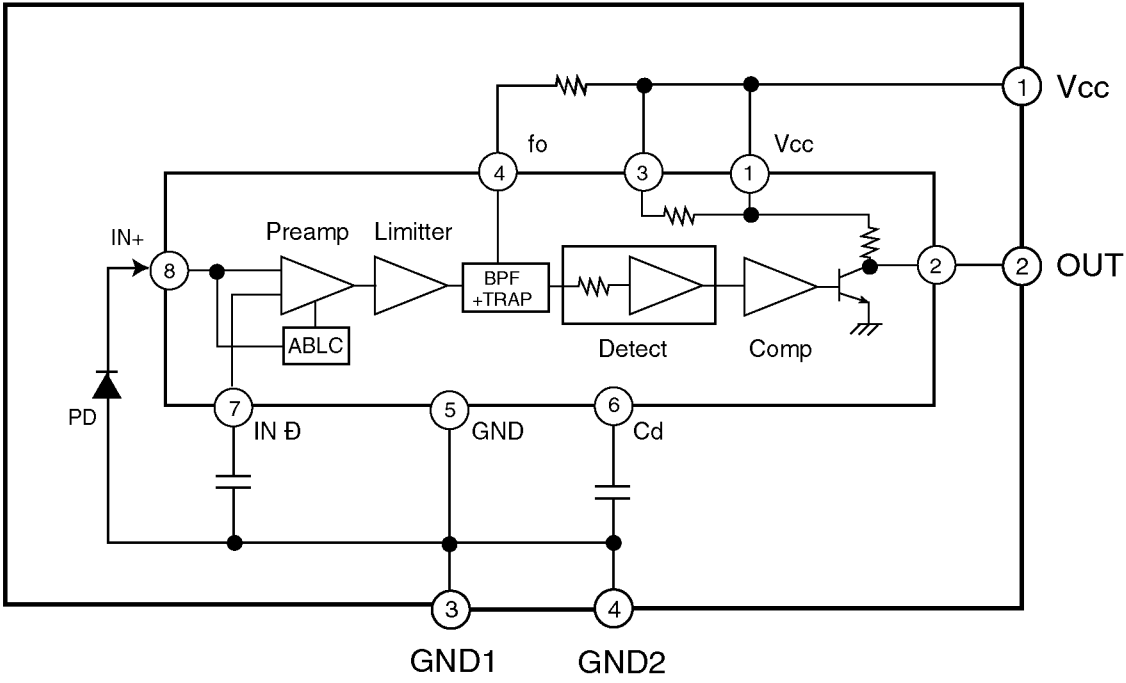
Vcc
1
fo
Vcc
4
3
1
IN+
8
Preamp
Limitter
BPF
+TRAP
2
2
OUT
ABLC
Detect
Comp
PD
7
IN Đ
5
GND
6
Cd
3
4
GND1
GND2

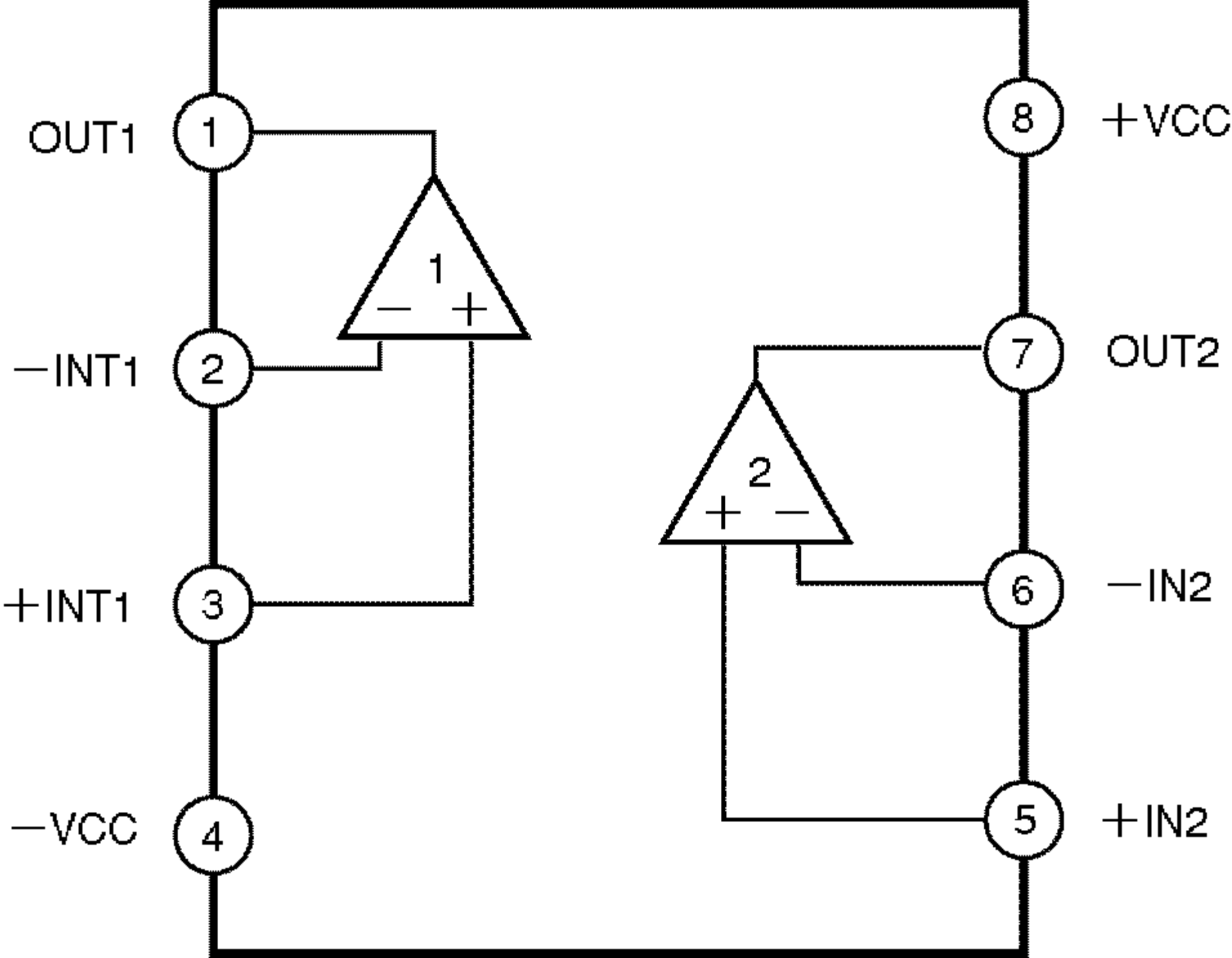
OUT1
1
−INT1
2
+INT1
3
−VCC
4
8
+VCC
7
OUT2
6
−IN2
5
+IN2
1
2

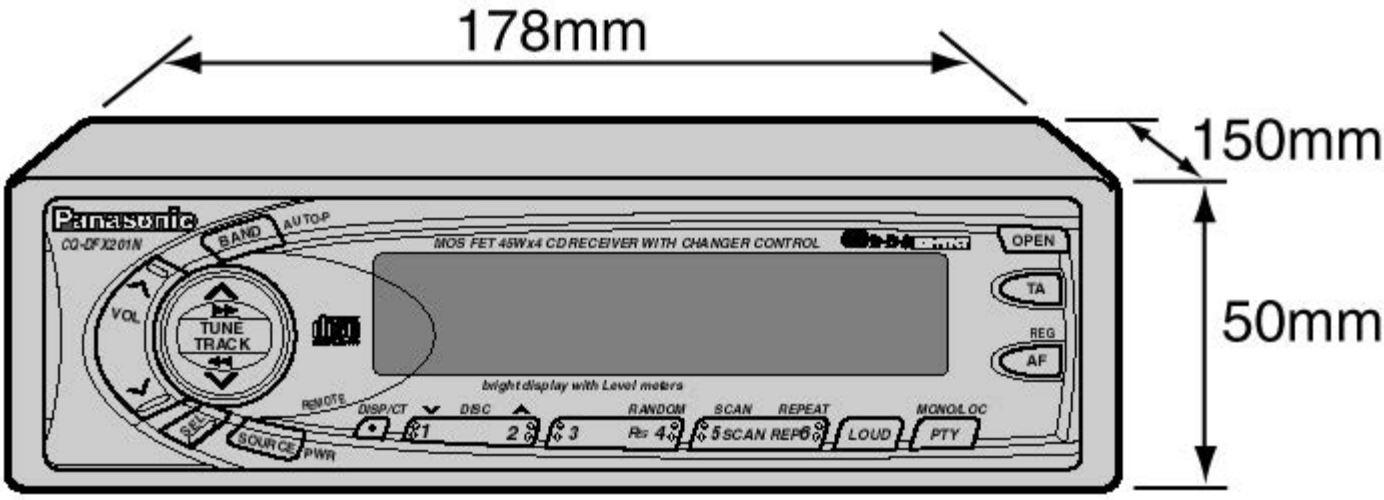
178mm
150mm
50mm
Panasonic
CQ-DFX201N
BAND
AUTO-P
MOS FET 45Wx4 CD RECEIVER WITH CHANGER CONTROL
OPEN
TA
REG
AF
VOL
TUNE
TRACK
bright display with Level meters
REMOTE
DISP/CT
DISC
RANDOM
SCAN
REPEAT
MONO/LOC
SEL
SOURCE
PWR
1
2
3
4
5 SCAN
REP 6
LOUD
PTY

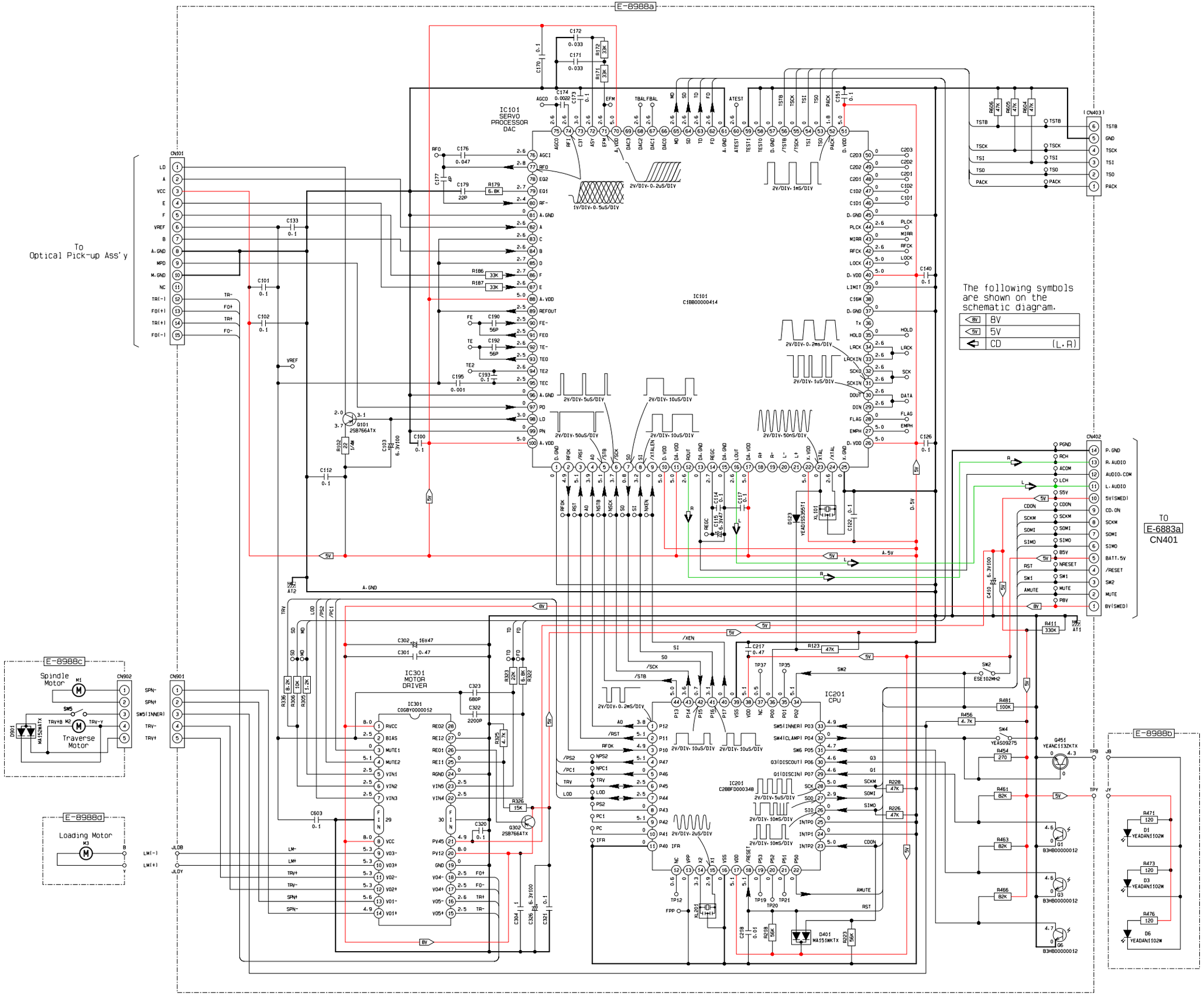
E-8988a
IC101
SERVO
PROCESSOR
DAC
IC101
C1BB00000414
CN101
To
Optical Pick-up Ass'y
CN403
CN402
TO
E-6883a
CN401
The following symbols
are shown on the
schematic diagram.
8V
5V
CD (L.R)
IC301
MOTOR
DRIVER
IC301
C0GBY0000012
IC201
CPU
IC201
C2BBF00034B
E-8988c
Spindle
Motor
Traverse
Motor
CN902
CN901
E-8988d
Loading Motor
E-8988b
Q101
2SB766ATX
Q302
2SB766ATX
Q451
YEANC113ZKTX
Q1
B3HB00000012
Q3
B3HB00000012
Q5
B3HB00000012
D1
YEADAN1102W
D3
YEADAN1102W
D6
YEADAN1102W
D401
MA151WKTX
D123
YEADISS2951
XL101
XL201
SW2
ESE102MH2
SW4
YEAS09275

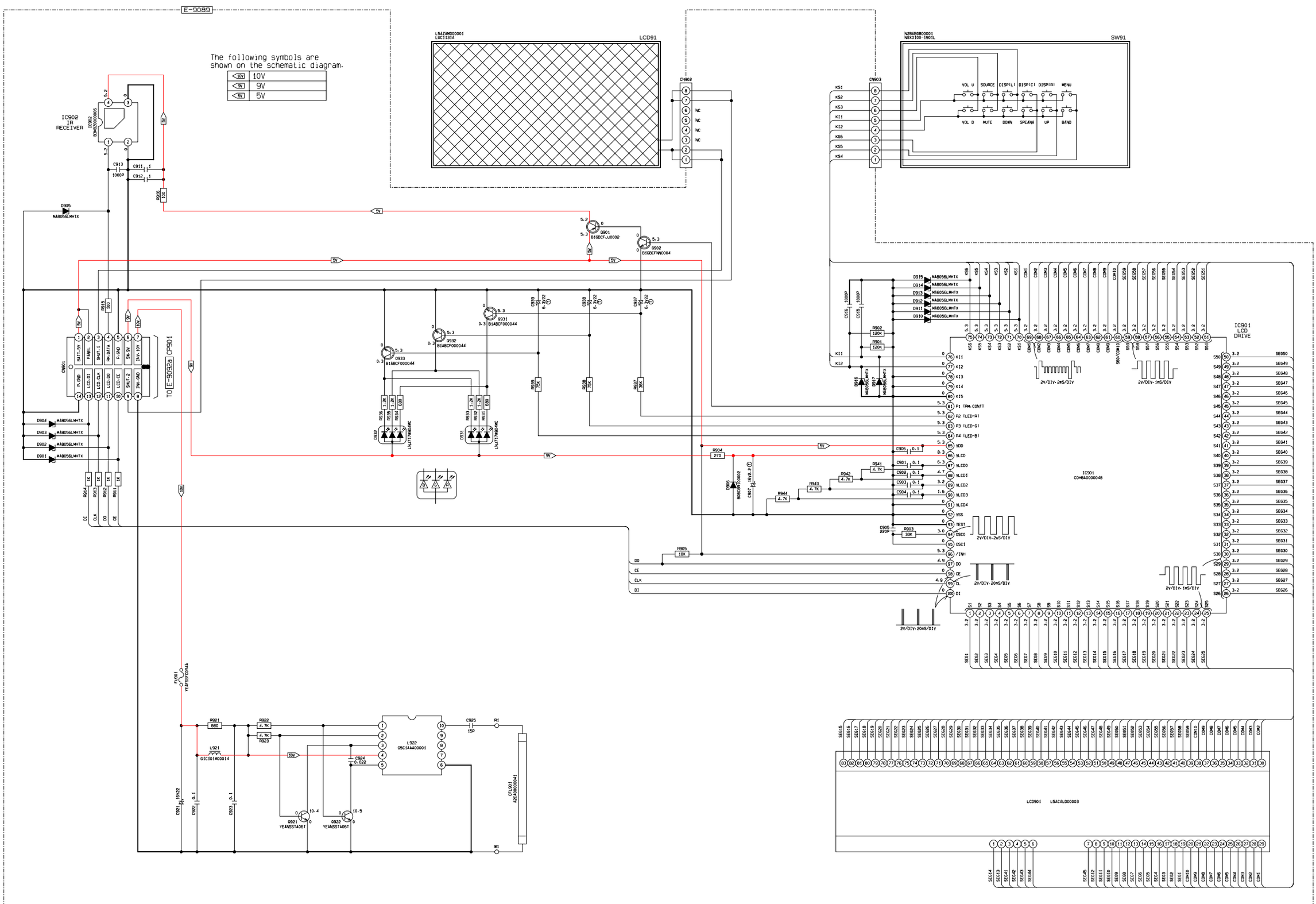
E-9089
The following symbols are shown on the schematic diagram.
10V
9V
5V
IC902 IR RECEIVER
LCD91
SW91
CN902
CN903
CN901
CP901
TO E-9092a
IC901 LCD DRIVE
IC901 C0HBA0000048
LCD901 L5AC4LD00003
Q901 B1GDCFJJ0002
Q902 B1GBCFNN0004
Q931 B1ABCF000044
Q932 B1ABCF000044
Q933 B1ABCF000044
D932 LNJ717R8WMC
D931 LNJ717R8WMC
L922 G5C1AAA00001
CFL901 N2CA0000041
Q921 YEANS514D6T
Q922 YEANS514D6T
L921 G1C101M00014
FUSE1 YEAFS5F0R44
D905 MA8056LMHTX
D904 MA8056LMHTX
D903 MA8056LMHTX
D902 MA8056LMHTX
D901 MA8056LMHTX
D906 B0BGBF000002
D916 MA8056LMHTX
D917 MA8056LMHTX
D915 MA8056LMHTX
D914 MA8056LMHTX
D913 MA8056LMHTX
D912 MA8056LMHTX
D911 MA8056LMHTX
D910 MA8056LMHTX
2V/DIV-2mS/DIV
2V/DIV-1mS/DIV
2V/DIV-2uS/DIV
2V/DIV-20mS/DIV

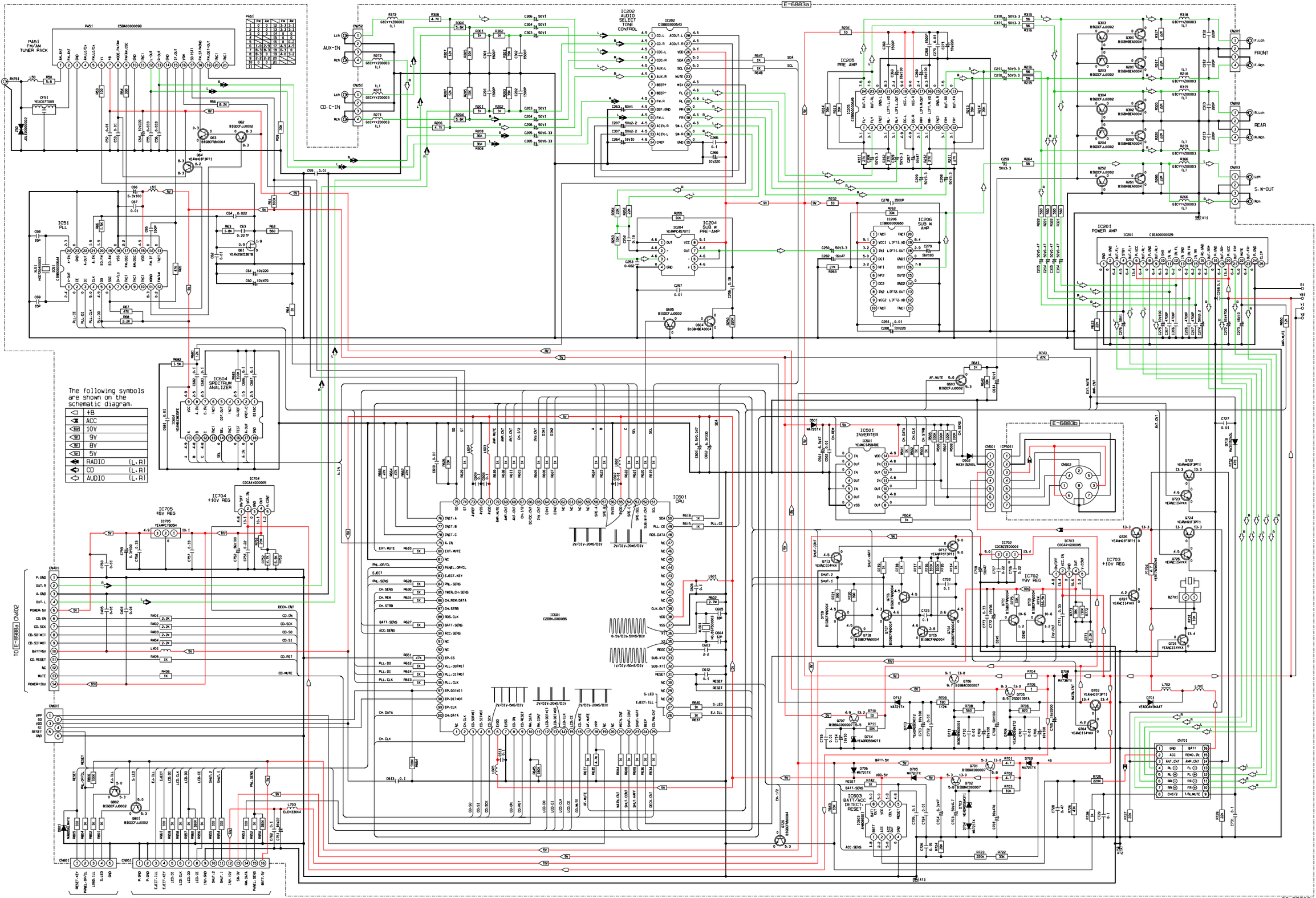

CG-DFB02U
MAIN

The following symbols are shown on the schematic diagram.

10V	10V
9V	9V
5V	5V

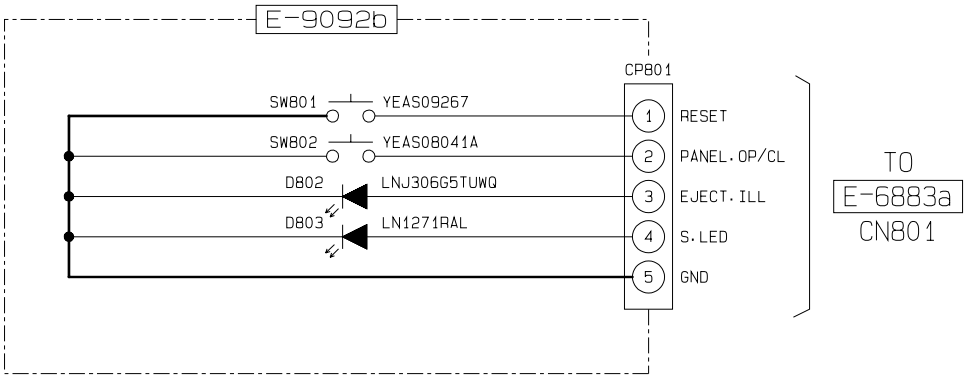

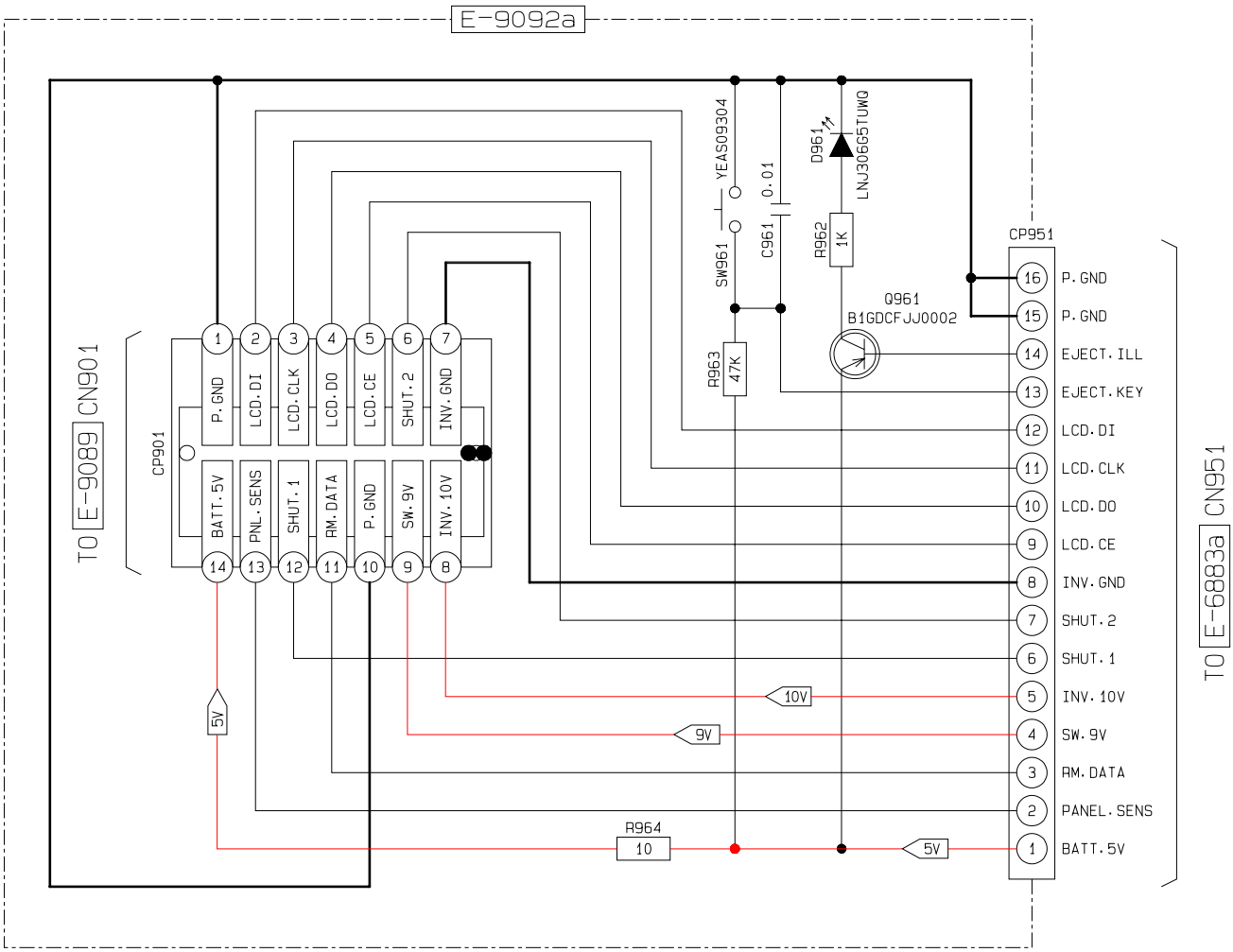

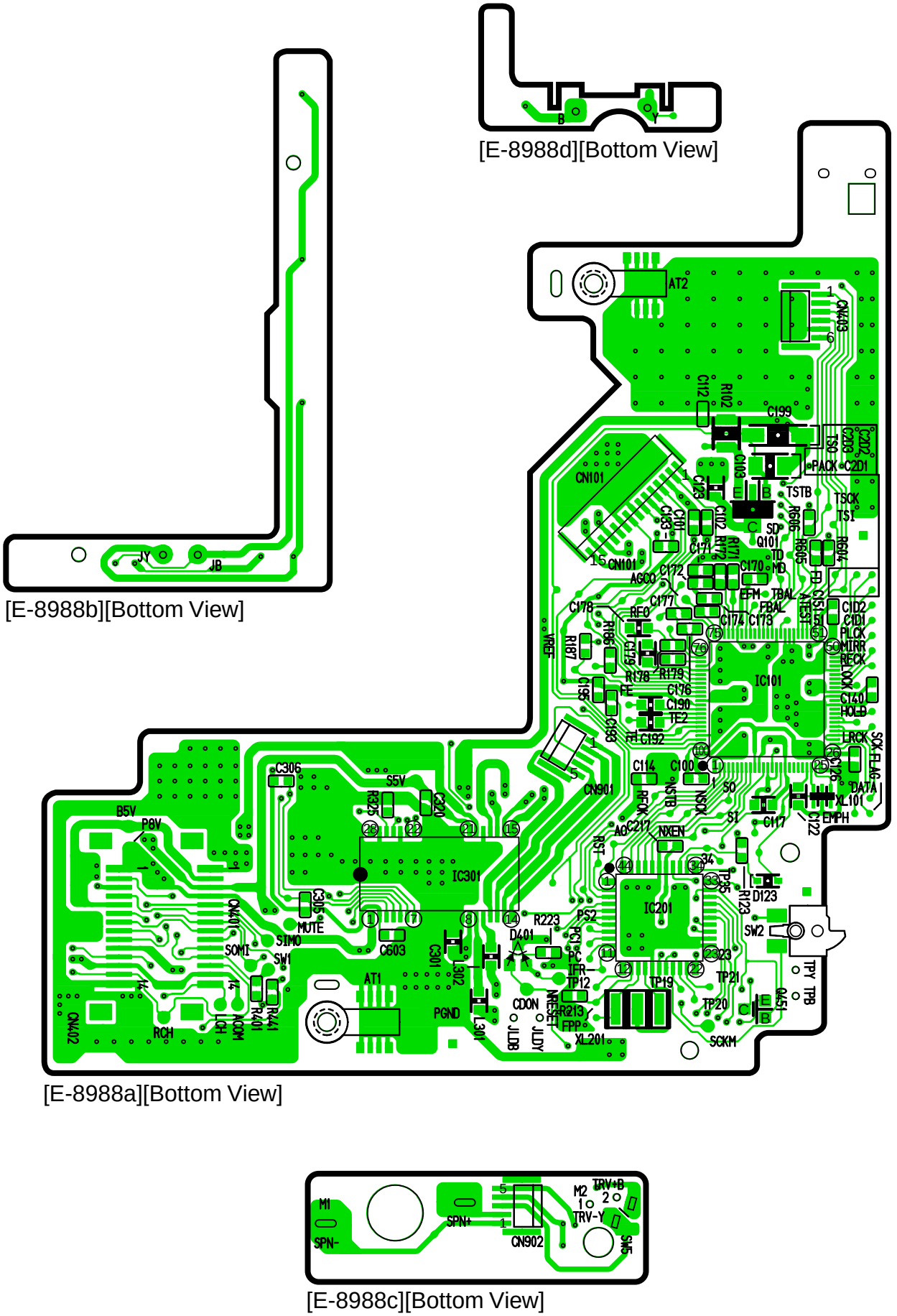

CQ-DF802U CD SERVO P.C.B.

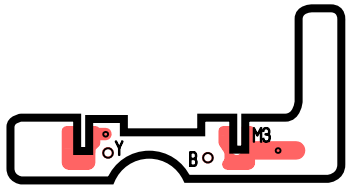

[E-8988d][Top View]

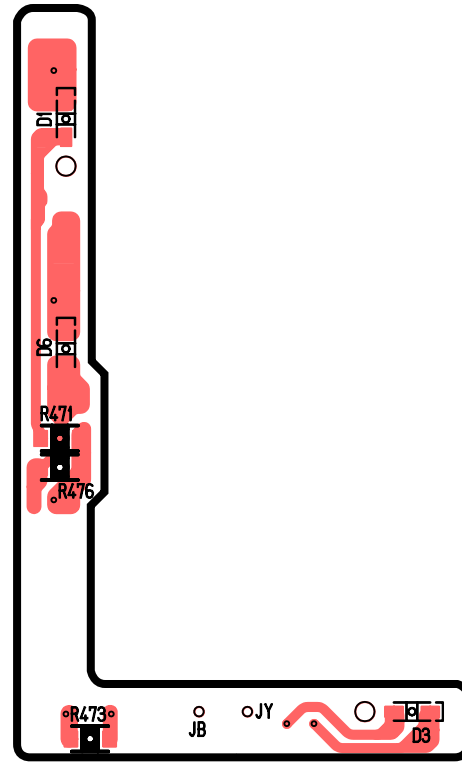

[E-8988b][Top View]

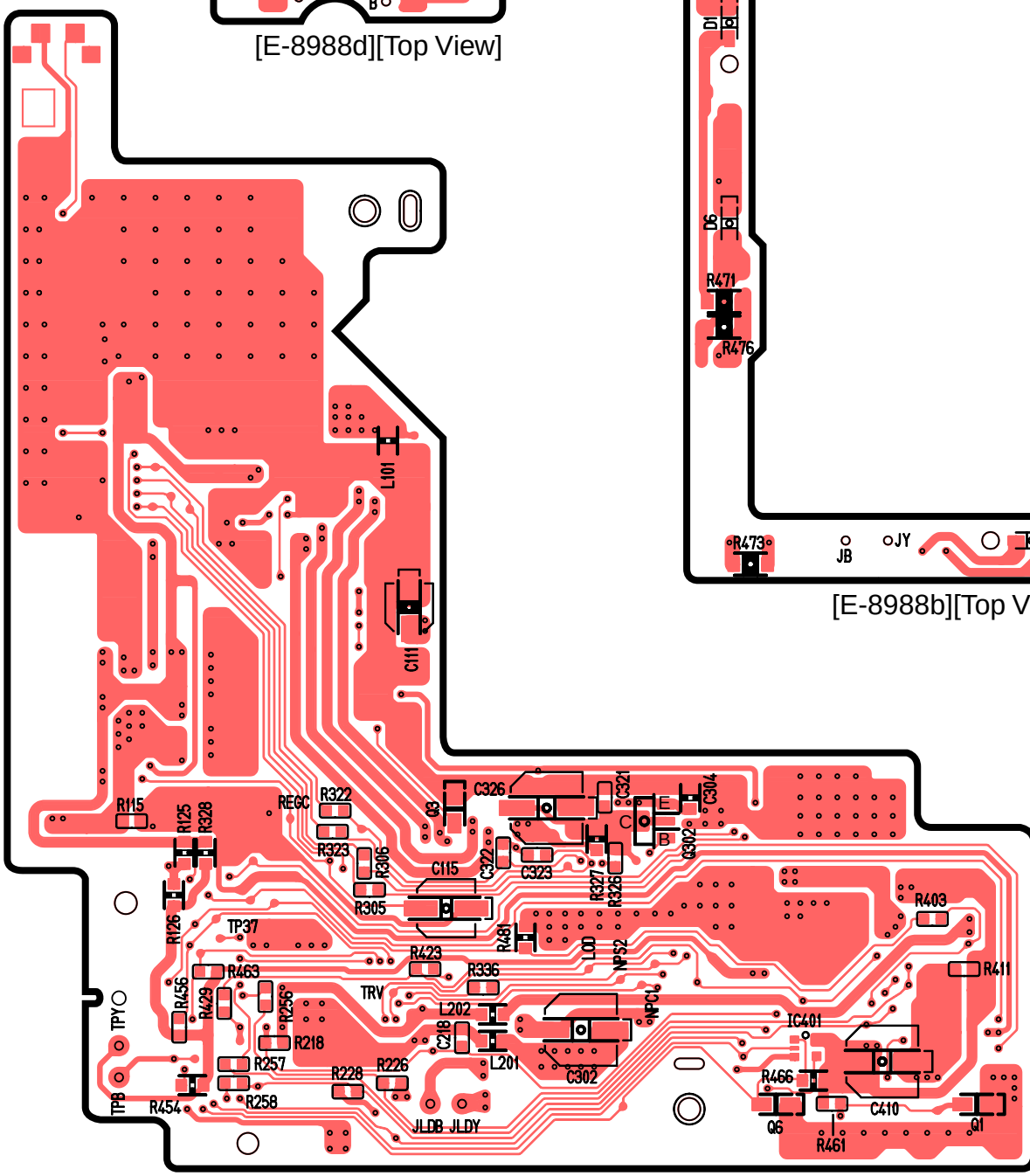

[E-8988a][Top View]

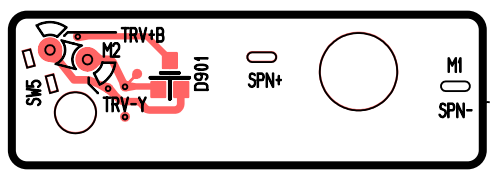

[E-8988c][Top View]

CQ-DF802U CD SERVO P.C.B.

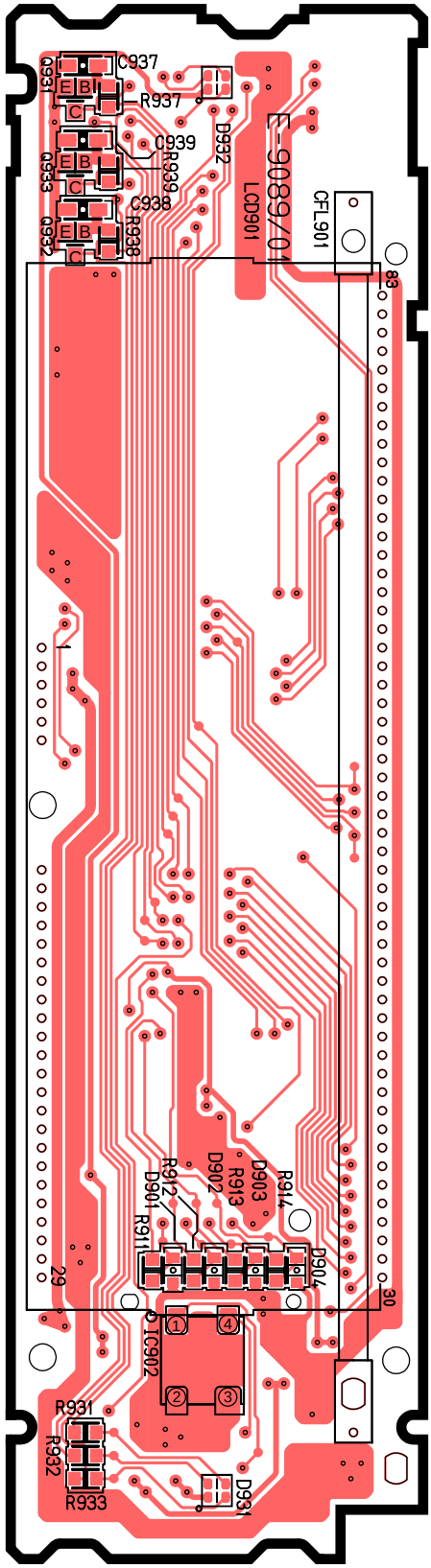

[E-9089][Top View]

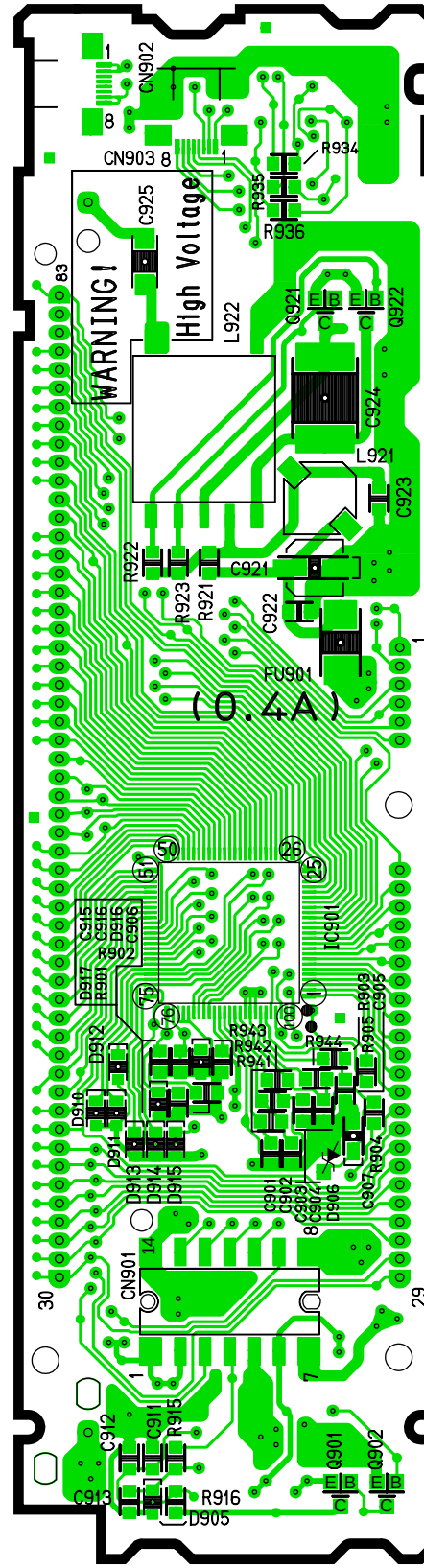

[E-9089][Bottom View]

CQ-DF802U ESC P.C.B.

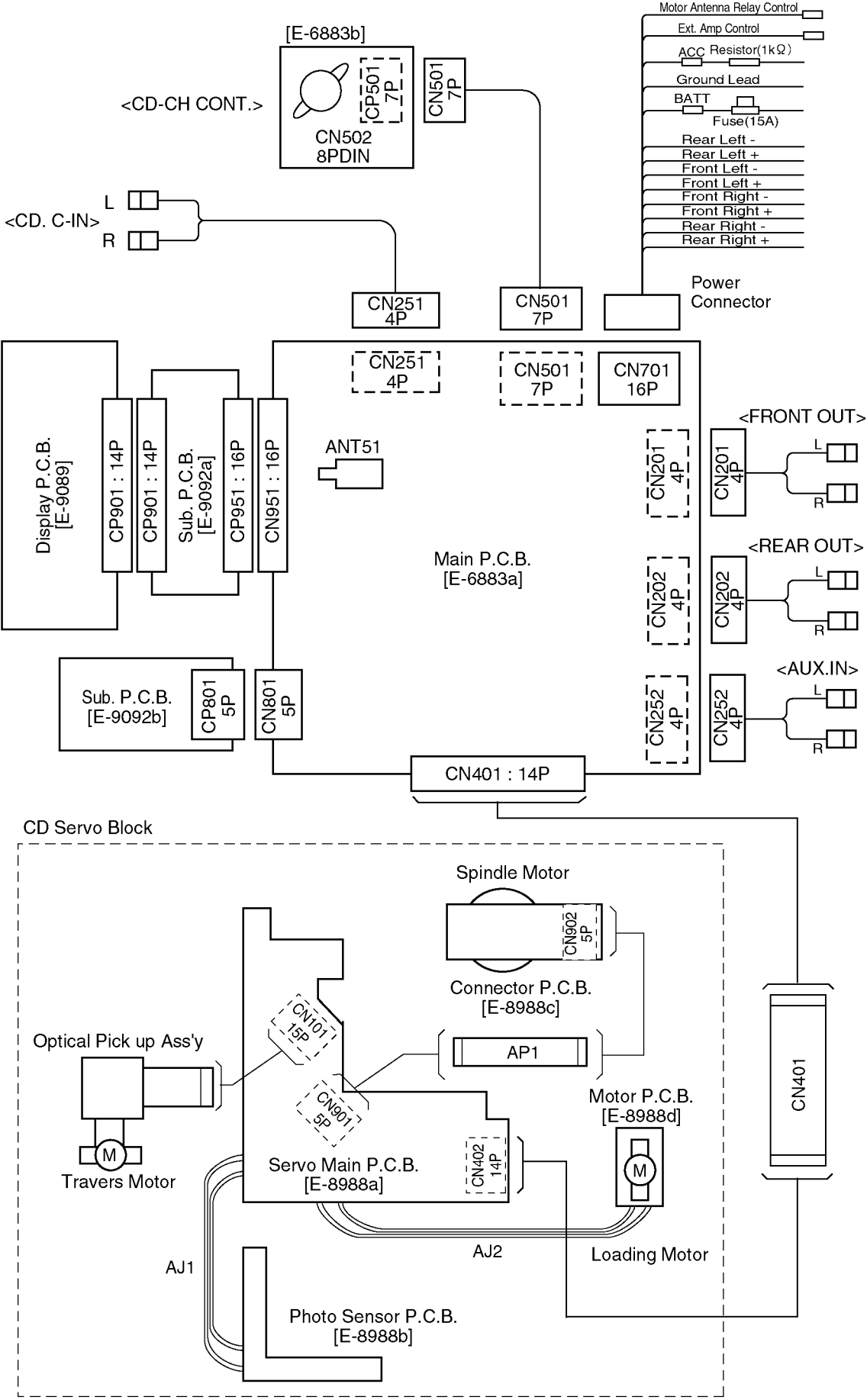

<Note> :

▭ ·····This mark shows a Ref. No. of connector

▭ ·····This mark shows a mounting position of connector.

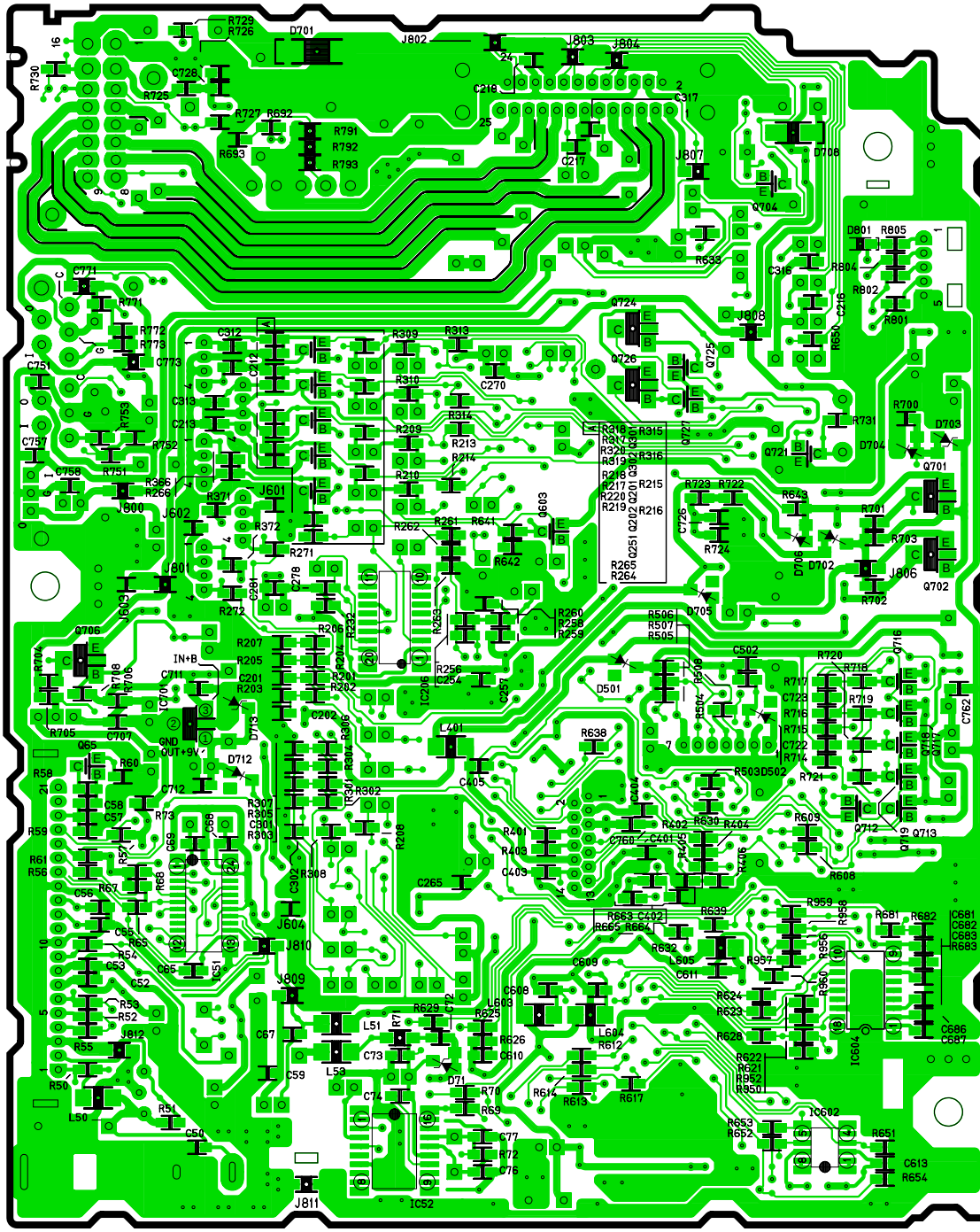

[E-6883a][Bottom View]

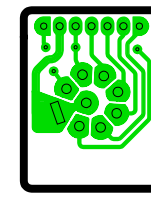

[E-6883b]
[Bottom View]

CQ-DF802U MAIN P.C.B.

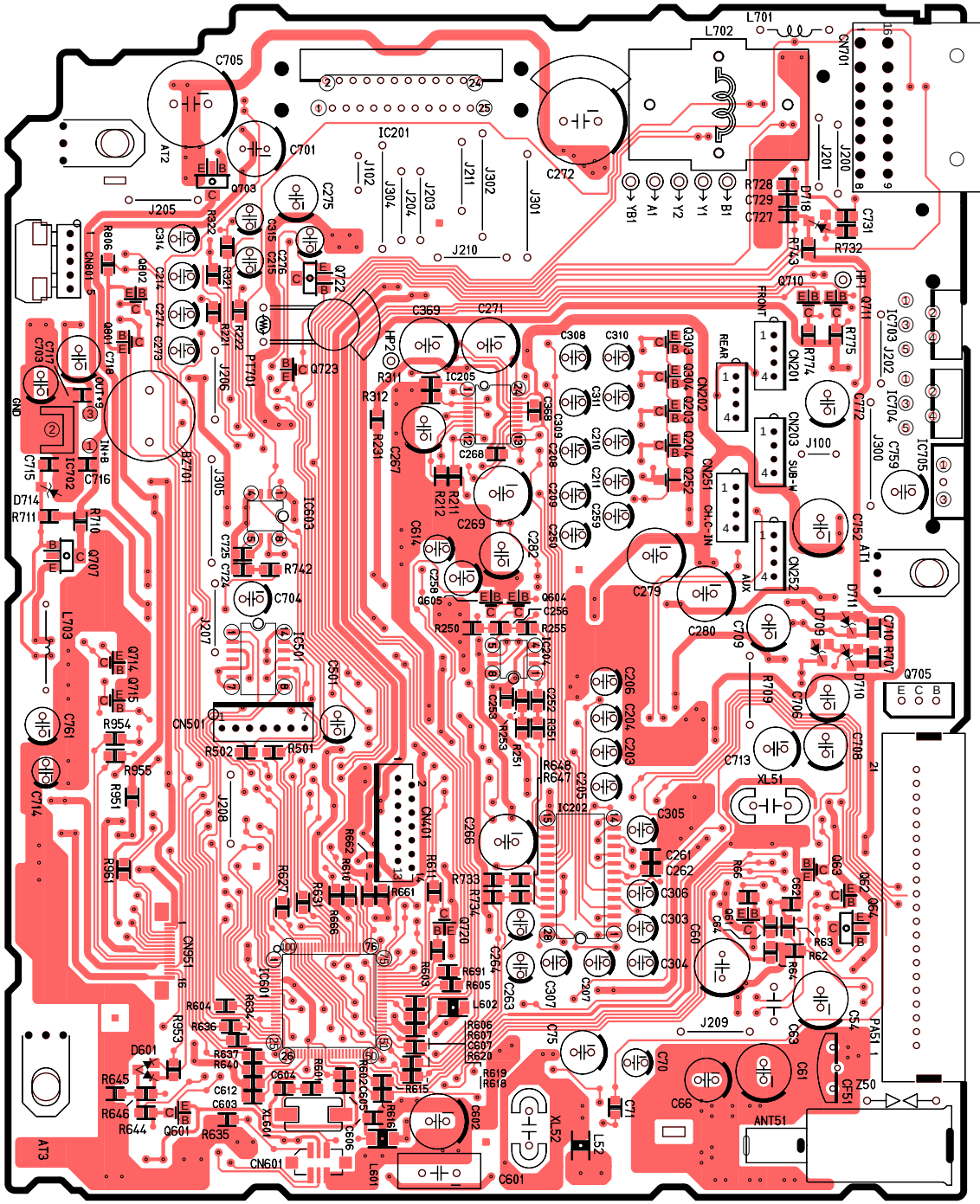

[E-6883a][Top View]

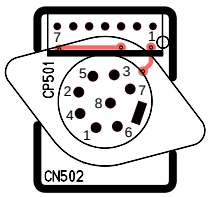

[E-6883b]
[Top View]

CQ-DF802U MAIN P.C.B

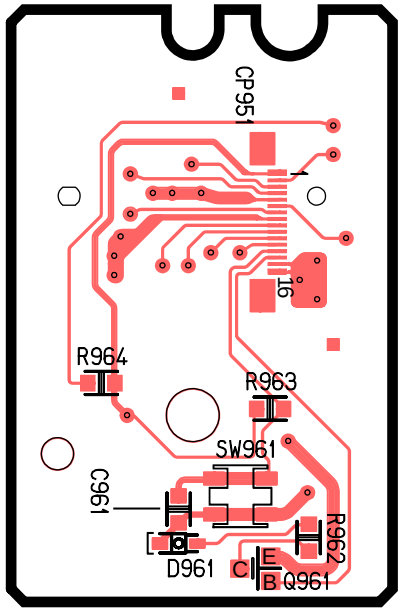

[E-9092a][Top View]

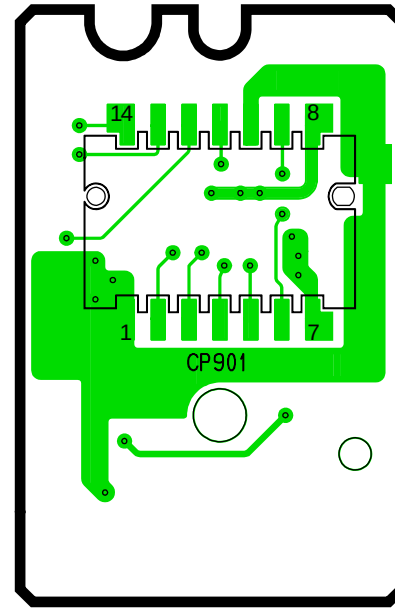

[E-9092a][Bottom View]

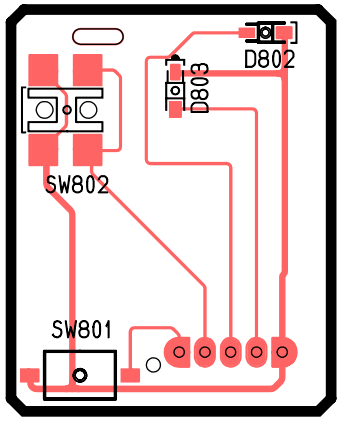

[E-9092b][Top View]

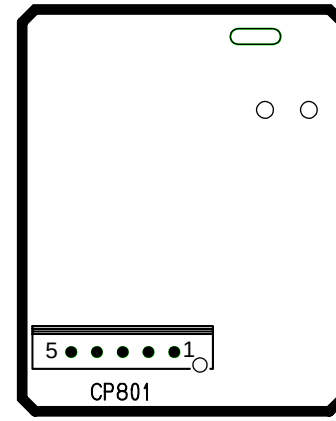

[E-9092b][Bottom View]