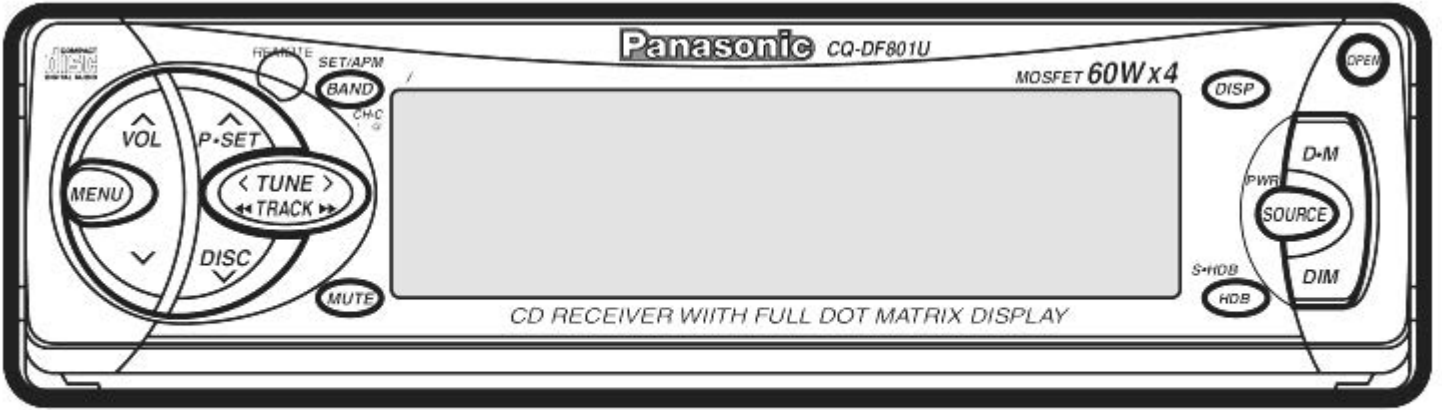
Panasonic CQ-DF801U
MOSFET 60W x 4
SET/APM
BAND
VOL
P-SET
MENU
TUNE
TRACK
DISC
MUTE
DISP
OPEN
D-M
PWR
SOURCE
S-HDB
HDB
DIM
CD RECEIVER WIITH FULL DOT MATRIX DISPLAY

(CQ-DF801U)

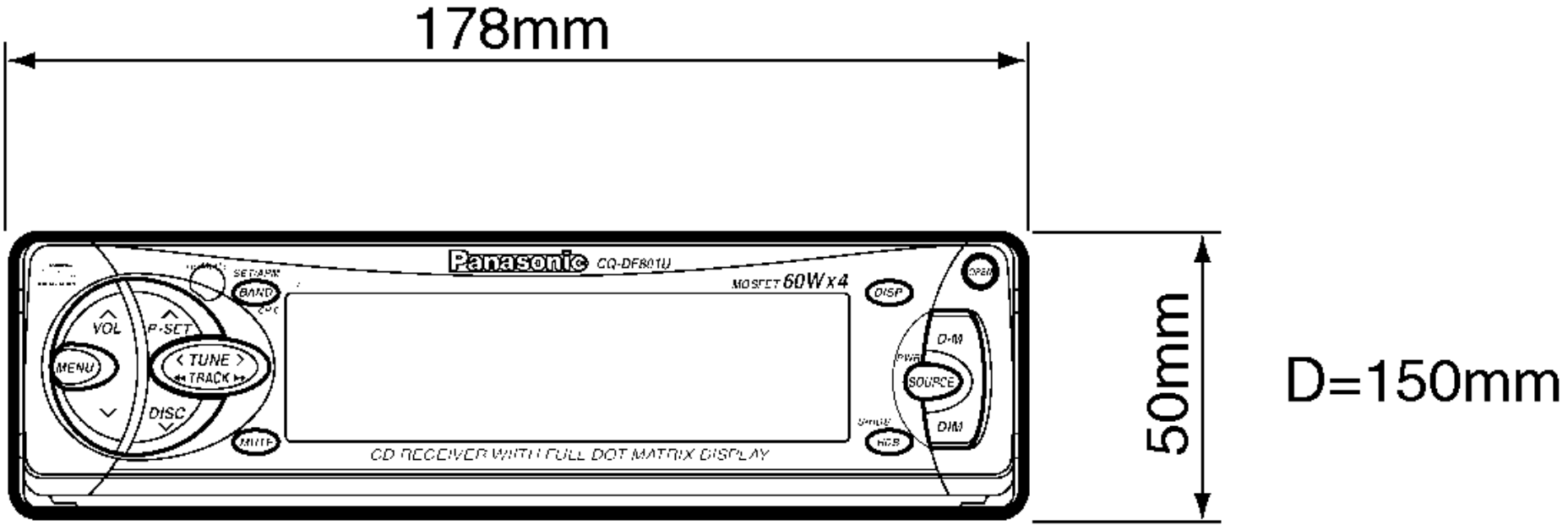
178mm
Panasonic CQ-DF801U
MOSFET 60W x 4
SET-APM
BAND
VOL
P-SET
MENU
TUNE
TRACK
DISC
MUTE
DISP
OPEN
D-M
PWR
SOURCE
DIM
HCB
CD RECEIVER WITH FULL DOT MATRIX DISPLAY
50mm
D=150mm

(CQ-DF801U)

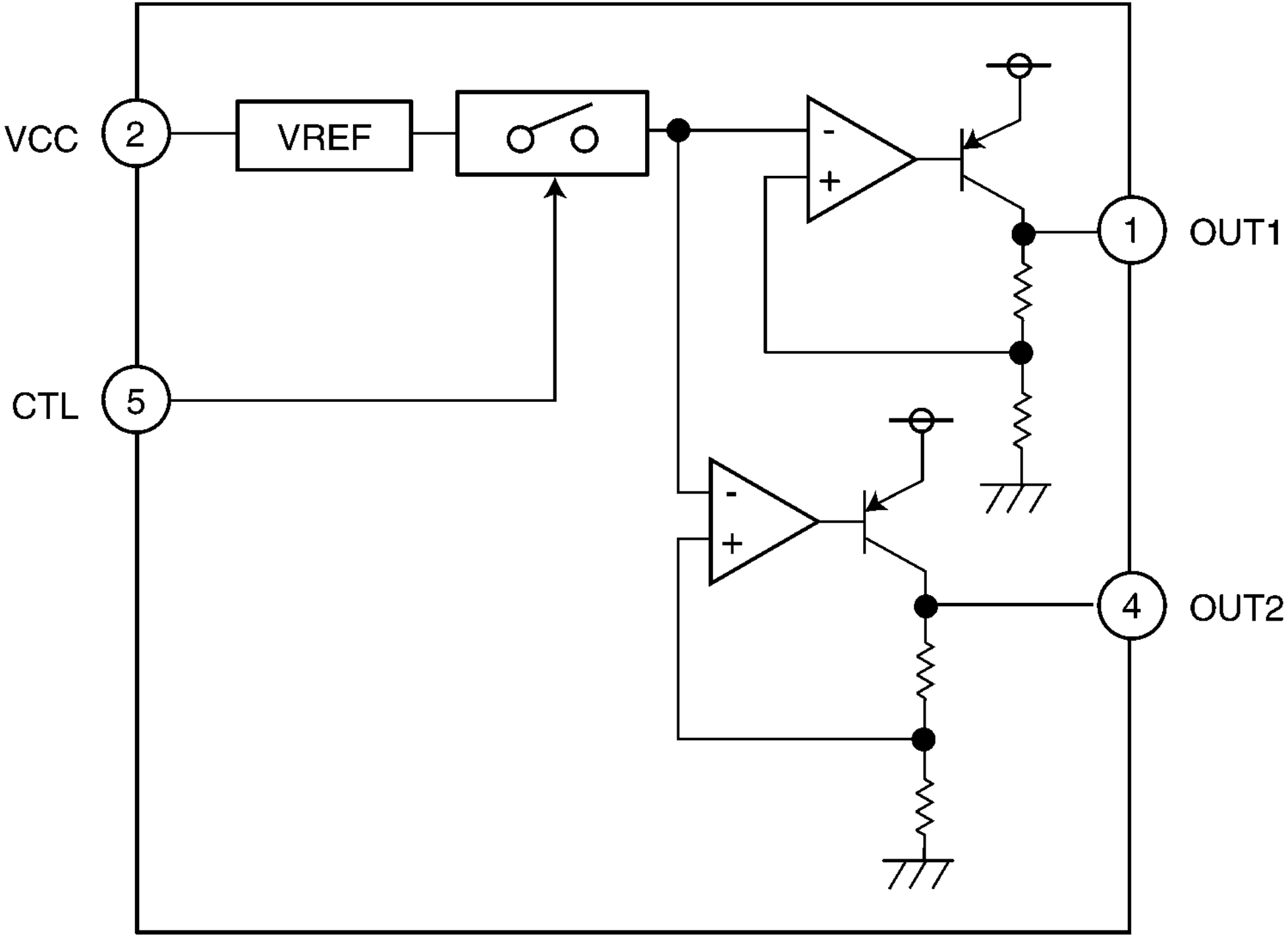
VCC
2
VREF
CTL
5
1
OUT1
4
OUT2

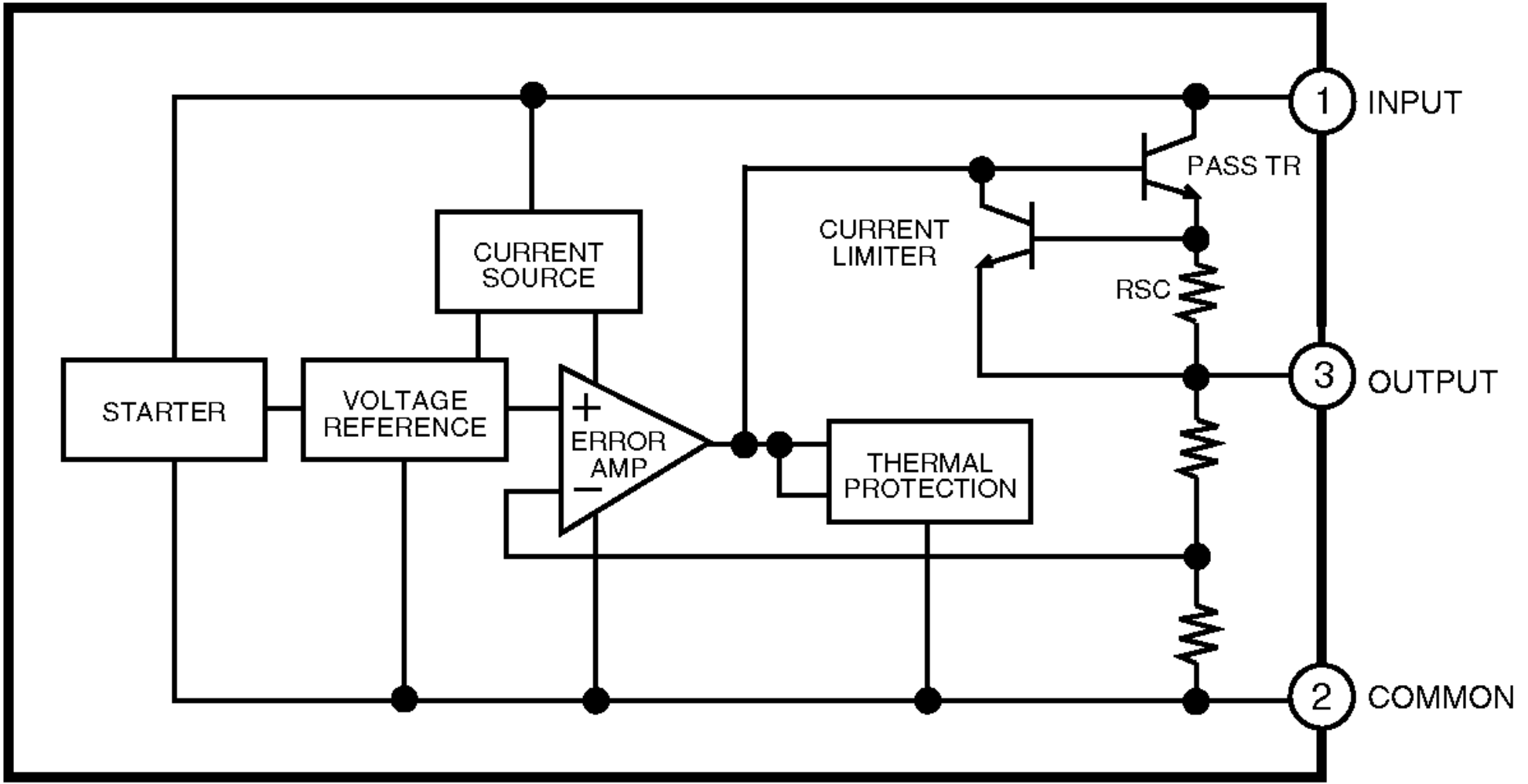
1
INPUT
PASS TR
CURRENT
LIMITER
CURRENT
SOURCE
RSC
3
OUTPUT
STARTER
VOLTAGE
REFERENCE
+
ERROR
AMP
−
THERMAL
PROTECTION
2
COMMON

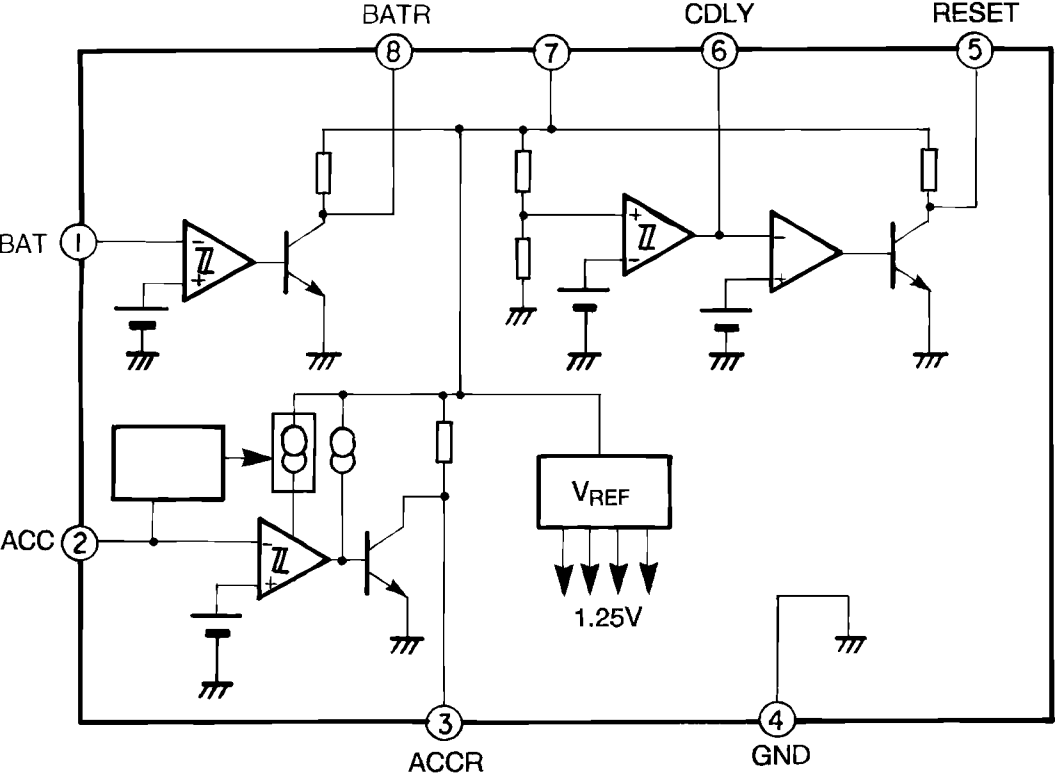
BATR
CDLY
RESET
8
7
6
5
BAT
1
ACC
2
VREF
1.25V
3
4
ACCR
GND

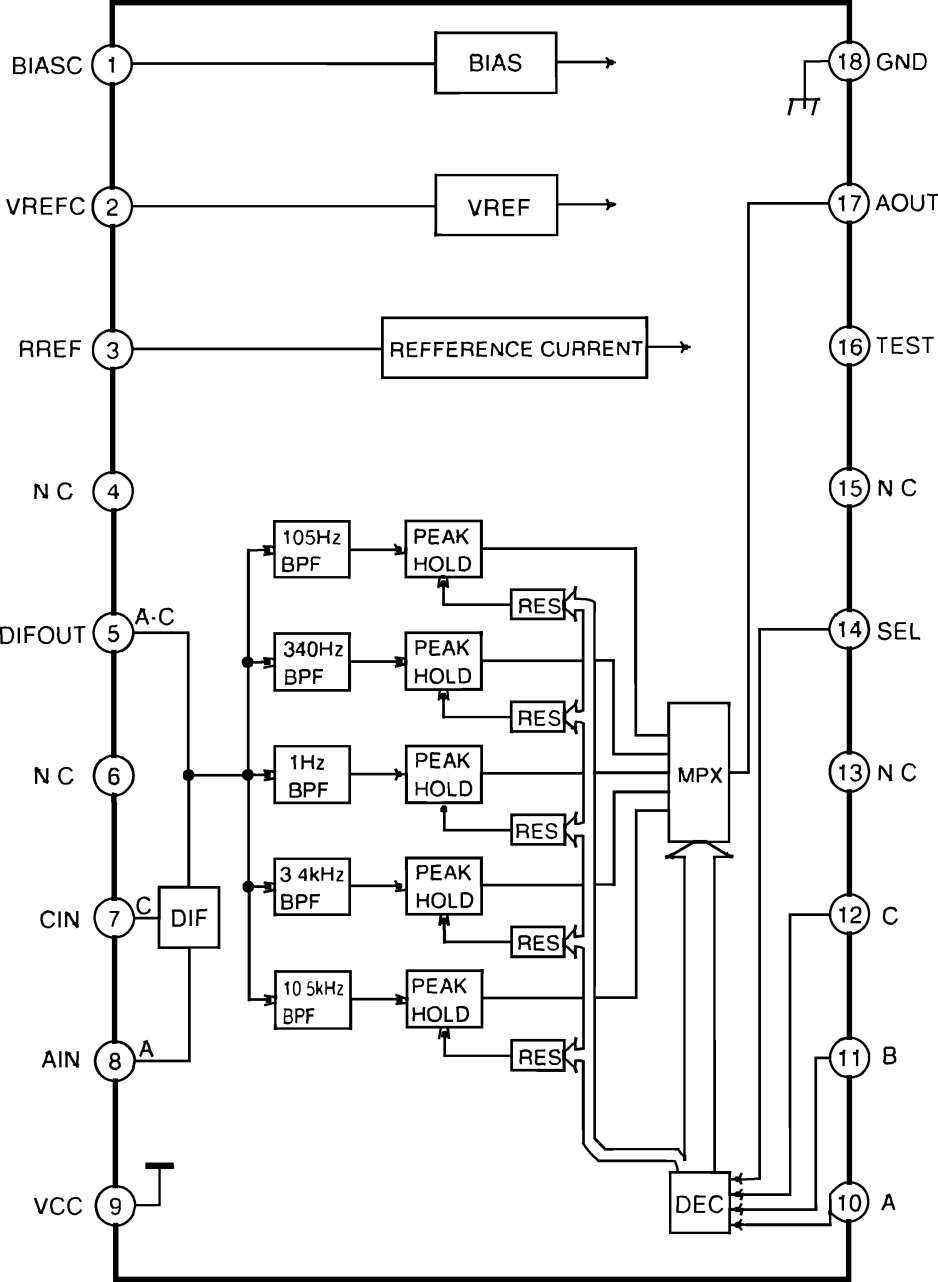
BIASC
1
BIAS
18
GND
VREFC
2
VREF
17
AOUT
RREF
3
REFFERENCE CURRENT
16
TEST
N C
4
15
N C
DIFOUT
5
A-C
14
SEL
N C
6
13
N C
CIN
7
C
DIF
12
C
AIN
8
A
11
B
VCC
9
10
A
105Hz BPF
340Hz BPF
1Hz BPF
3 4kHz BPF
10 5kHz BPF
PEAK HOLD
RES
MPX
DEC

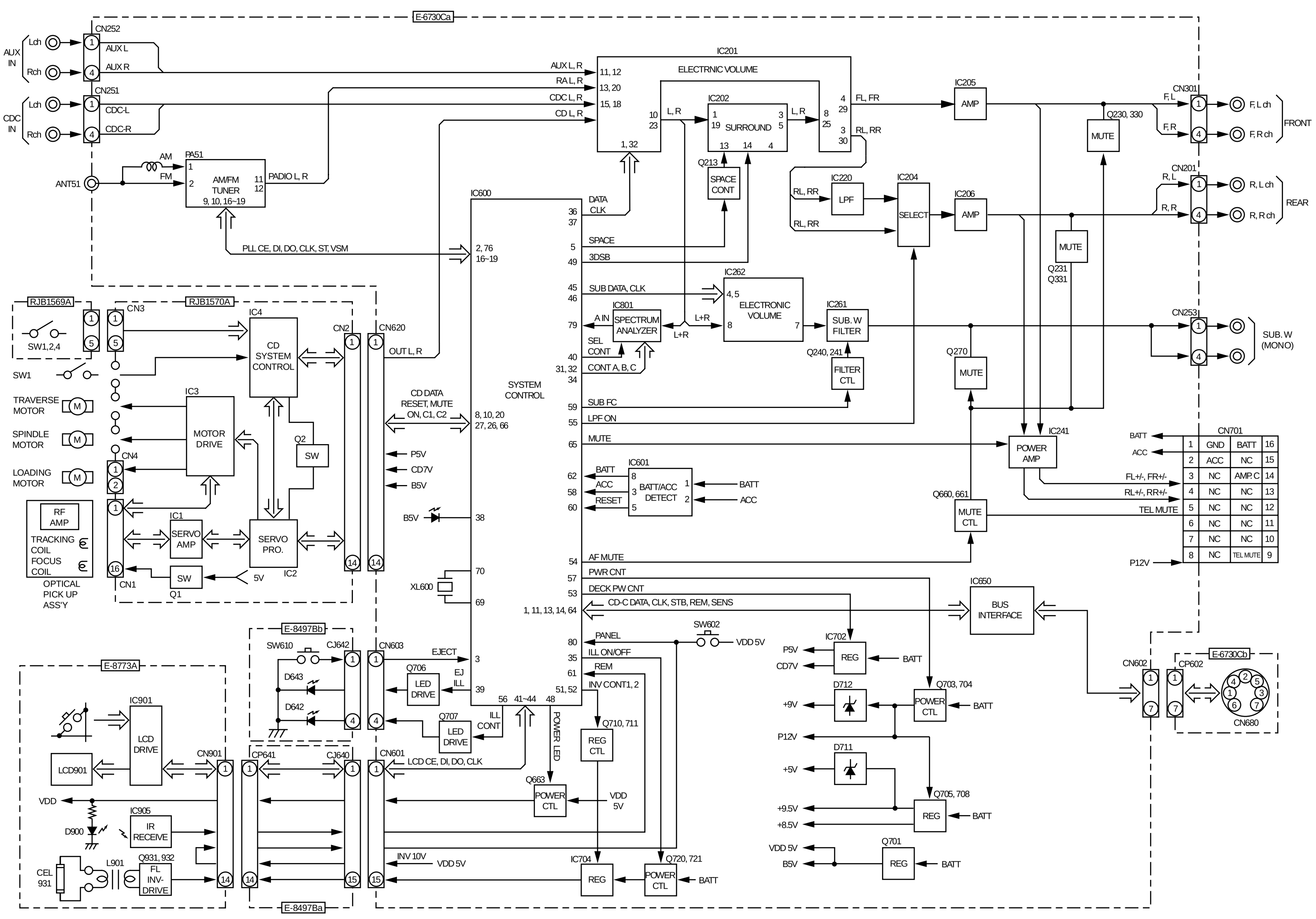
E-6730Ca
AUX IN
Lch
Rch
CN252
AUX L
AUX R
CDC IN
CN251
CDC-L
CDC-R
ANT51
AM
FM
PA51
AM/FM TUNER
9, 10, 16~19
PADIO L, R
PLL CE, DI, DO, CLK, ST, VSM
IC201
ELECTRNIC VOLUME
AUX L, R
RA L, R
CDC L, R
CD L, R
IC202
SURROUND
Q213
SPACE CONT
FL, FR
RL, RR
IC205
AMP
IC220
LPF
IC204
SELECT
IC206
AMP
Q230, 330
MUTE
Q231
Q331
CN301
F, L
F, R
F, L ch
F, R ch
FRONT
CN201
R, L
R, R
R, L ch
R, R ch
REAR
IC600
SYSTEM CONTROL
DATA
CLK
SPACE
3DSB
SUB DATA, CLK
A IN
SEL CONT
CONT A, B, C
SUB FC
LPF ON
MUTE
BATT
ACC
RESET
AF MUTE
PWR CNT
DECK PW CNT
CD-C DATA, CLK, STB, REM, SENS
PANEL
ILL ON/OFF
REM
INV CONT1, 2
IC262
ELECTRONIC VOLUME
IC801
SPECTRUM ANALYZER
L+R
IC261
SUB. W FILTER
Q240, 241
FILTER CTL
Q270
CN253
SUB. W (MONO)
IC601
BATT/ACC DETECT
IC241
POWER AMP
Q660, 661
MUTE CTL
CN701
BATT
ACC
FL+/-, FR+/-
RL+/-, RR+/-
TEL MUTE
P12V
GND
NC
AMP. C
IC650
BUS INTERFACE
SW602
VDD 5V
IC702
REG
P5V
CD7V
D712
+9V
Q703, 704
POWER CTL
P12V
D711
+5V
Q705, 708
+9.5V
+8.5V
VDD 5V
B5V
Q701
CN602
CP602
E-6730Cb
CN680
RJB1569A
SW1,2,4
SW1
CN3
RJB1570A
IC4
CD SYSTEM CONTROL
CN2
CN620
OUT L, R
TRAVERSE MOTOR
SPINDLE MOTOR
LOADING MOTOR
IC3
MOTOR DRIVE
CN4
Q2
SW
CD DATA
RESET, MUTE
ON, C1, C2
P5V
CD7V
B5V
RF AMP
TRACKING COIL
FOCUS COIL
OPTICAL PICK UP ASS'Y
IC1
SERVO AMP
SERVO PRO.
IC2
CN1
Q1
5V
XL600
E-8497Bb
SW610
CJ642
CN603
EJECT
D643
D642
Q706
LED DRIVE
EJ
ILL
Q707
ILL CONT
POWER LED
Q710, 711
REG CTL
E-8773A
IC901
LCD DRIVE
LCD901
CN901
CP641
CJ640
CN601
LCD CE, DI, DO, CLK
Q663
VDD
D900
IC905
IR RECEIVE
CEL 931
L901
Q931, 932
FL INV-DRIVE
INV 10V
IC704
Q720, 721
E-8497Ba

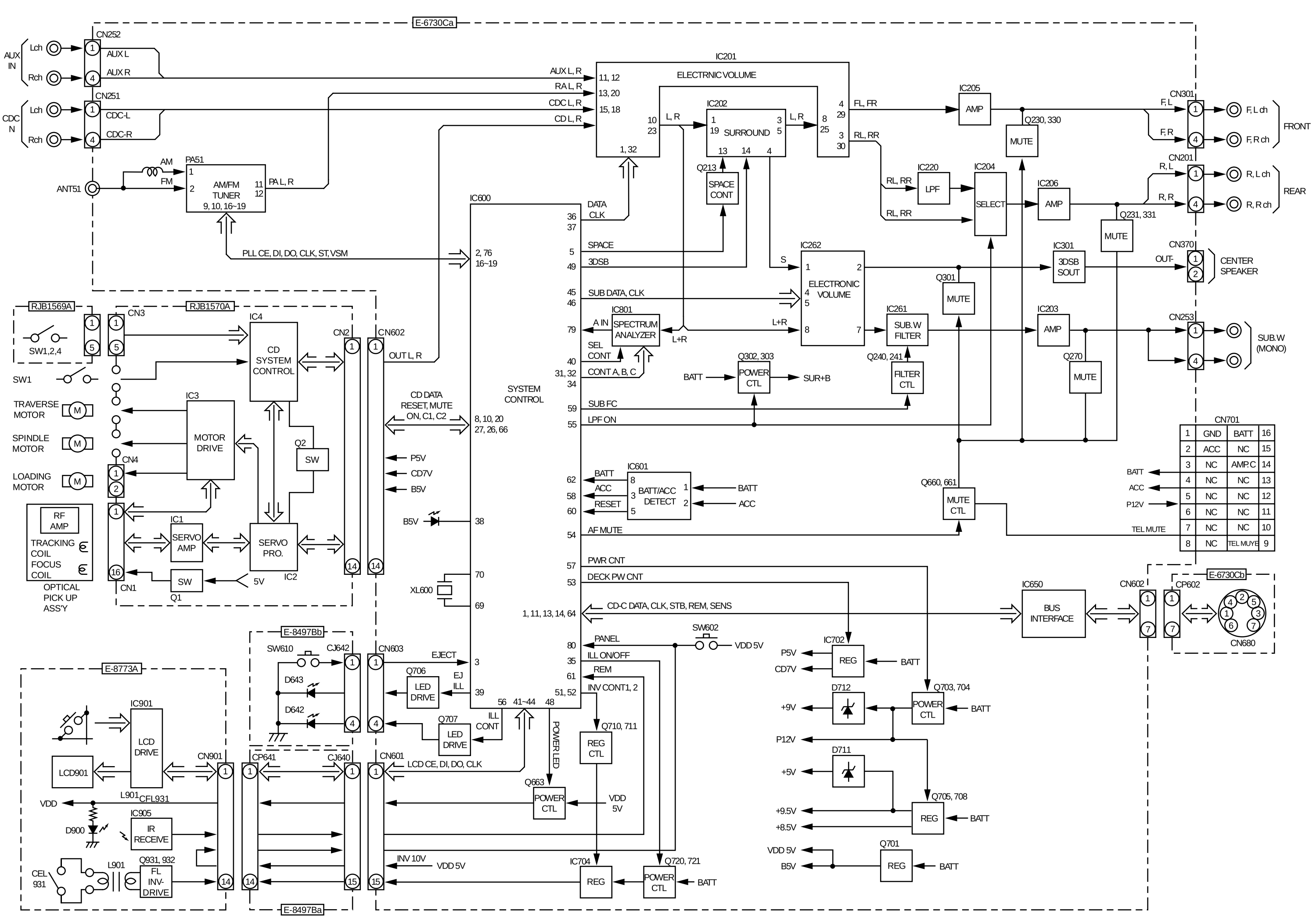

CN701			
1	GND	BATT	16
2	ACC	NC	15
3	NC	AMP.C	14
4	NC	NC	13
5	NC	NC	12
6	NC	NC	11
7	NC	NC	10
8	NC	TEL MUYE	9

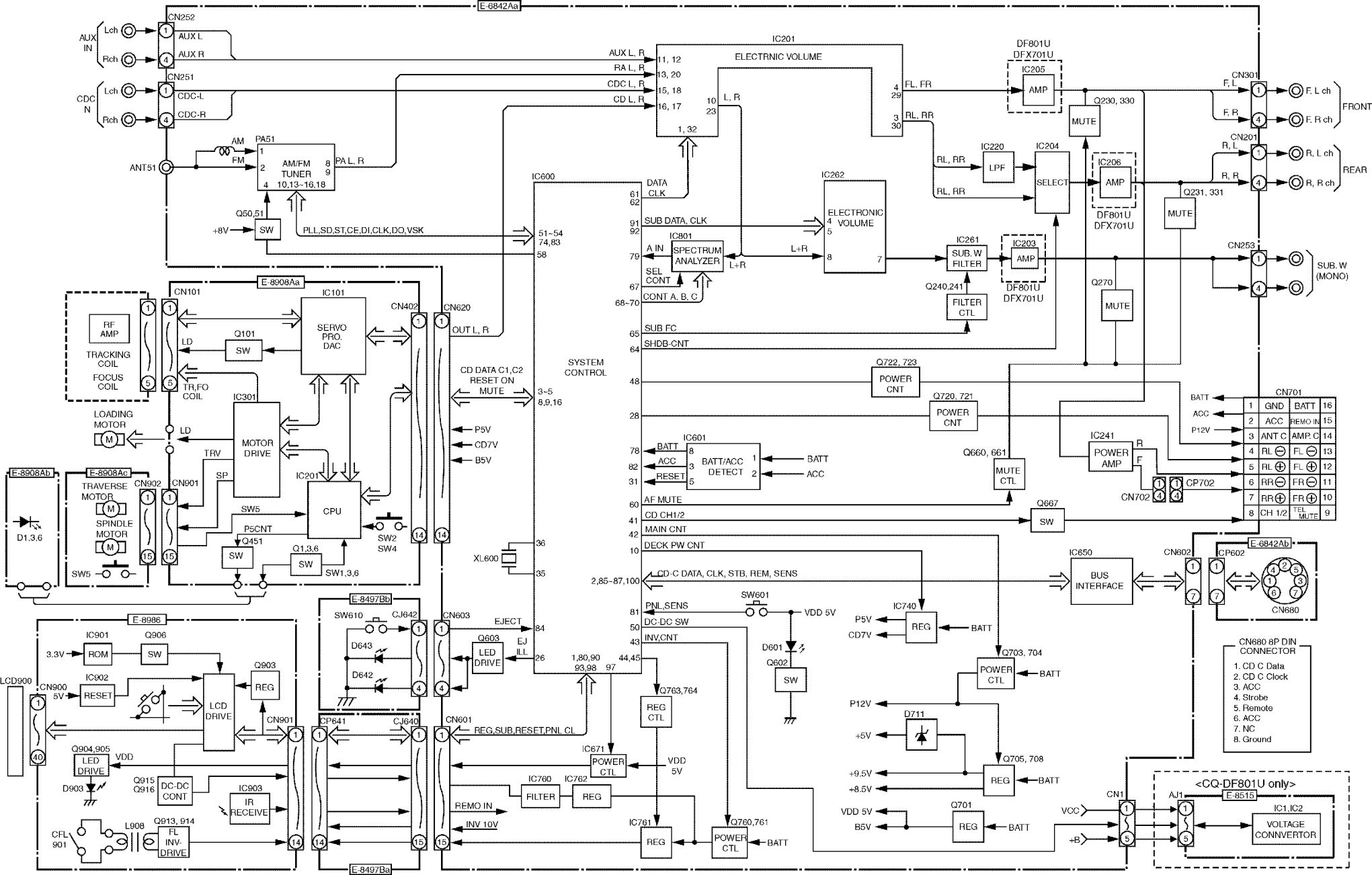
E-6842Aa
CN252
AUX IN
Lch
Rch
AUX L
AUX R
CN251
CDC N
CDC-L
CDC-R
ANT51
AM
FM
PA51
AM/FM TUNER
10,13~16,18
PA L, R
Q50,51
SW
+8V
PLL,SD,ST,CE,DI,CLK,DO,VSK
IC201
ELECTRNIC VOLUME
AUX L, R
RA L, R
CDC L, R
CD L, R
L, R
FL, FR
RL, RR
DF801U
DFX701U
IC205
AMP
Q230, 330
MUTE
CN301
F. L
F. R
F. L ch
F. R ch
FRONT
IC220
LPF
IC204
SELECT
IC206
AMP
Q231, 331
CN201
R, L
R, R
R, L ch
R, R ch
REAR
IC600
DATA
CLK
SUB DATA, CLK
A IN
SEL CONT
CONT A. B. C
IC801
SPECTRUM ANALYZER
L+R
IC262
ELECTRONIC VOLUME
IC261
SUB. W FILTER
IC203
AMP
Q240,241
FILTER CTL
Q270
CN253
SUB. W (MONO)
SUB FC
SHDB-CNT
E-8908Aa
CN101
IC101
SERVO PRO. DAC
CN402
CN620
OUT L, R
RF AMP
TRACKING COIL
FOCUS COIL
TR,FO COIL
LD
Q101
SW
CD DATA C1,C2
RESET ON MUTE
SYSTEM CONTROL
Q722, 723
POWER CNT
Q720, 721
POWER CNT
CN701
BATT
ACC
P12V
GND
ANT C
RL
RR
CH 1/2
REMO IN
AMP. C
FL
FR
TEL MUTE
LOADING MOTOR
IC301
MOTOR DRIVE
TRV
SP
IC601
BATT/ACC DETECT
RESET
Q660, 661
MUTE CTL
IC241
POWER AMP
CP702
CN702
E-8908Ab
D1,3,6
E-8908Ac
TRAVERSE MOTOR
SPINDLE MOTOR
CN902
CN901
IC201
CPU
SW5
P5CNT
Q451
Q1,3,6
SW1,3,6
SW2
SW4
P5V
CD7V
B5V
AF MUTE
CD CH1/2
MAIN CNT
DECK PW CNT
Q667
XL600
CD-C DATA, CLK, STB, REM, SENS
IC650
BUS INTERFACE
CN602
CP602
E-6842Ab
CN680
CN680 8P DIN CONNECTOR
1. CD C Data
2. CD C Clock
3. ACC
4. Strobe
5. Remote
6. ACC
7. NC
8. Ground
E-8986
IC901
ROM
Q906
SW
3.3V
IC902
RESET
LCD DRIVE
Q903
REG
LCD900
CN900
5V
CN901
Q904,905
LED DRIVE
VDD
D903
Q915
Q916
DC-DC CONT
IC903
IR RECEIVE
CFL 901
L908
Q913, 914
FL INV-DRIVE
E-8497Bb
SW610
CJ642
D643
D642
CP641
CJ640
E-8497Ba
CN603
EJECT
Q603
LED DRIVE
EJ ILL
CN601
REG,SUB,RESET,PNL CL
REMO IN
INV 10V
PNL,SENS
DC-DC SW
INV,CNT
SW601
VDD 5V
D601
Q602
SW
Q763,764
REG CTL
IC671
POWER CTL
IC760
FILTER
IC762
REG
IC761
REG
Q760,761
POWER CTL
BATT
IC740
REG
Q703, 704
POWER CTL
D711
Q705, 708
REG
Q701
REG
VDD 5V
B5V
CN1
VCC
+B
<CQ-DF801U only>
AJ1
E-8515
IC1,IC2
VOLTAGE CONNVERTOR

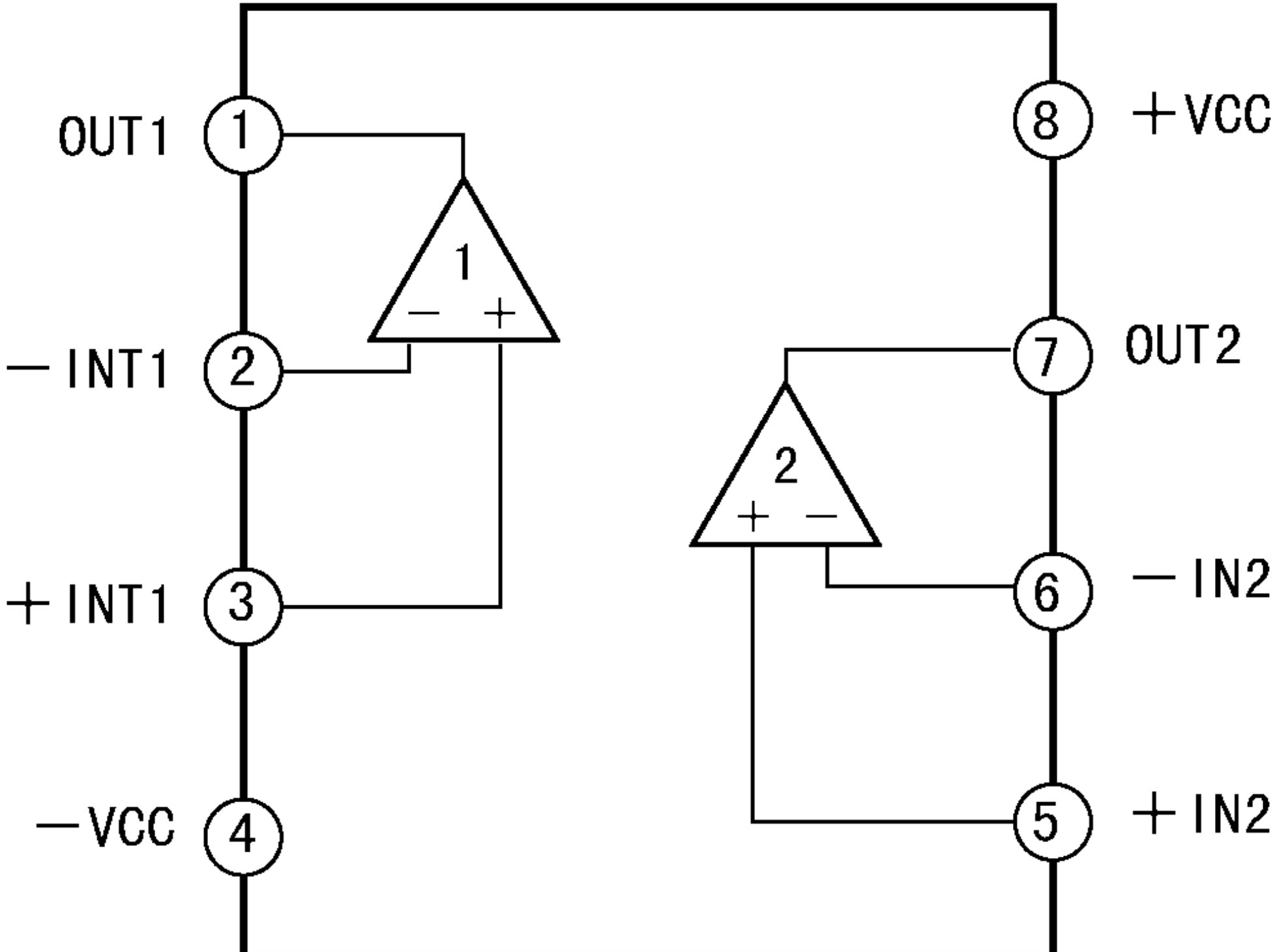
OUT1
1
−INT1
2
+INT1
3
−VCC
4
8
+VCC
7
OUT2
6
−IN2
5
+IN2
1
−
+
2
+
−

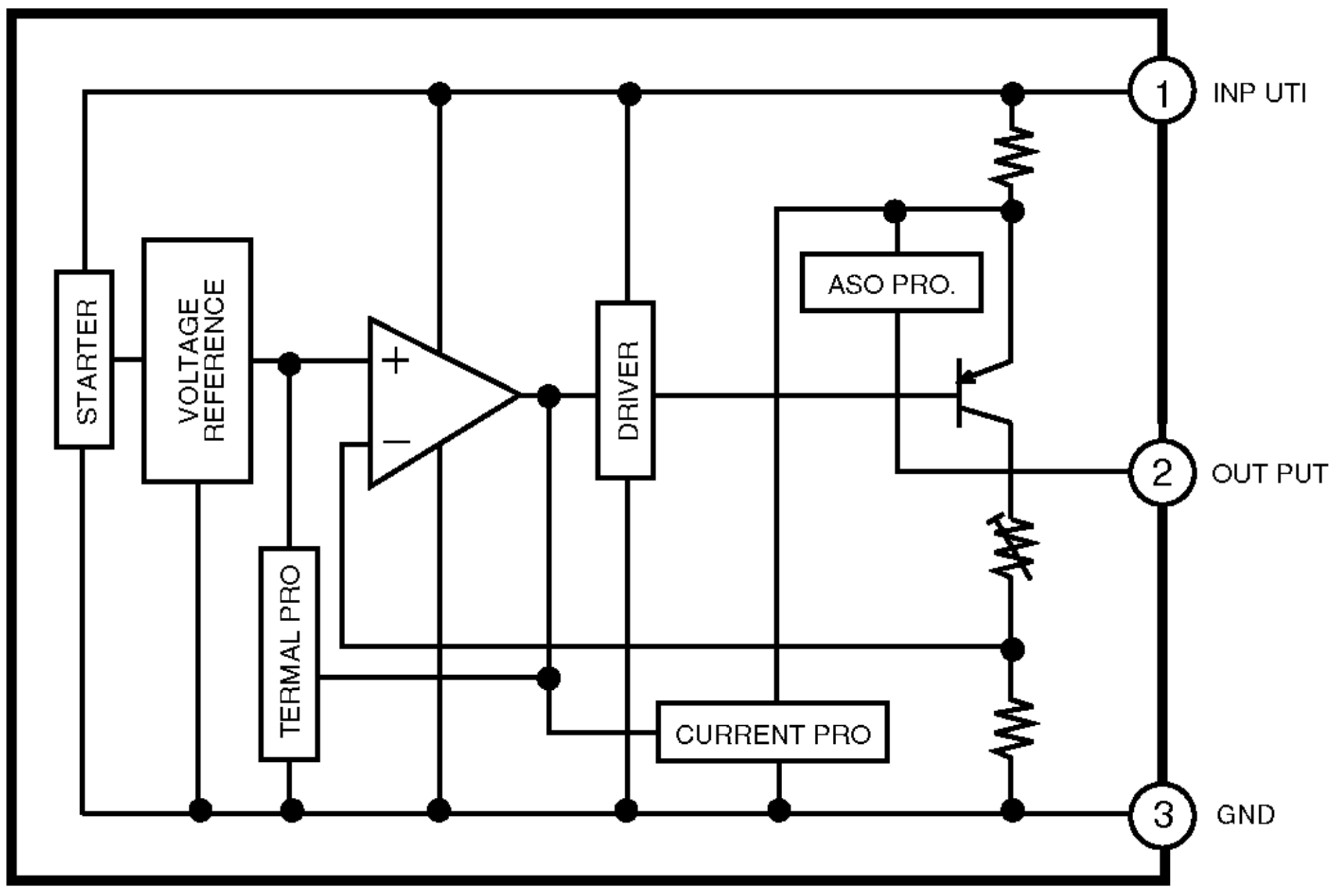
STARTER
VOLTAGE REFERENCE
TERMAL PRO
+
−
DRIVER
ASO PRO.
CURRENT PRO
1
INP UTI
2
OUT PUT
3
GND

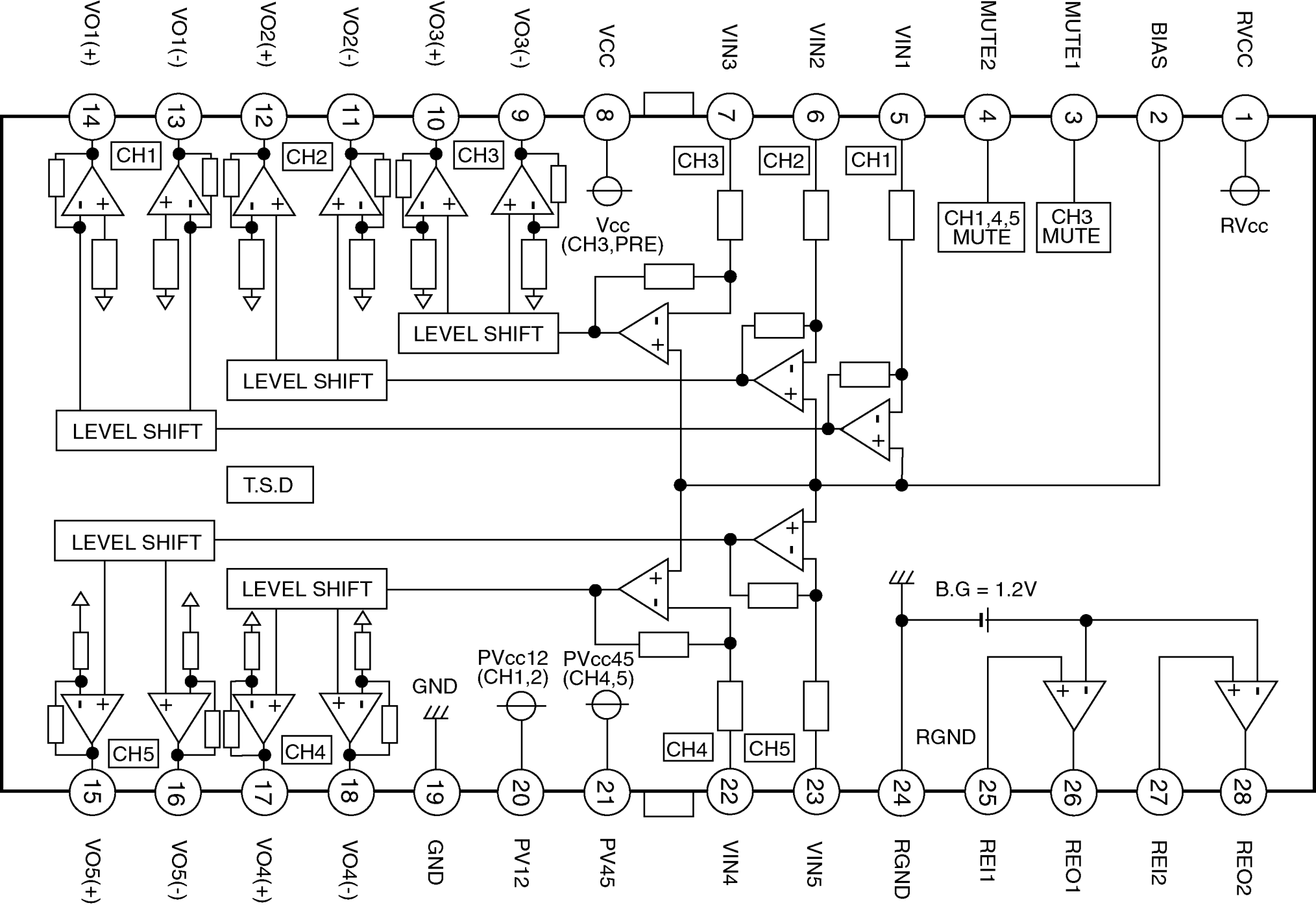
VO1(+)
VO1(-)
VO2(+)
VO2(-)
VO3(+)
VO3(-)
VCC
VIN3
VIN2
VIN1
MUTE2
MUTE1
BIAS
RVCC
14
13
12
11
10
9
8
7
6
5
4
3
2
1
CH1
CH2
CH3
CH3
CH2
CH1
Vcc
(CH3,PRE)
CH1,4,5
MUTE
CH3
MUTE
RVcc
LEVEL SHIFT
LEVEL SHIFT
LEVEL SHIFT
T.S.D
LEVEL SHIFT
LEVEL SHIFT
B.G = 1.2V
PVcc12
(CH1,2)
PVcc45
(CH4,5)
GND
CH5
CH4
CH4
CH5
RGND
15
16
17
18
19
20
21
22
23
24
25
26
27
28
VO5(+)
VO5(-)
VO4(+)
VO4(-)
GND
PV12
PV45
VIN4
VIN5
RGND
REI1
REO1
REI2
REO2

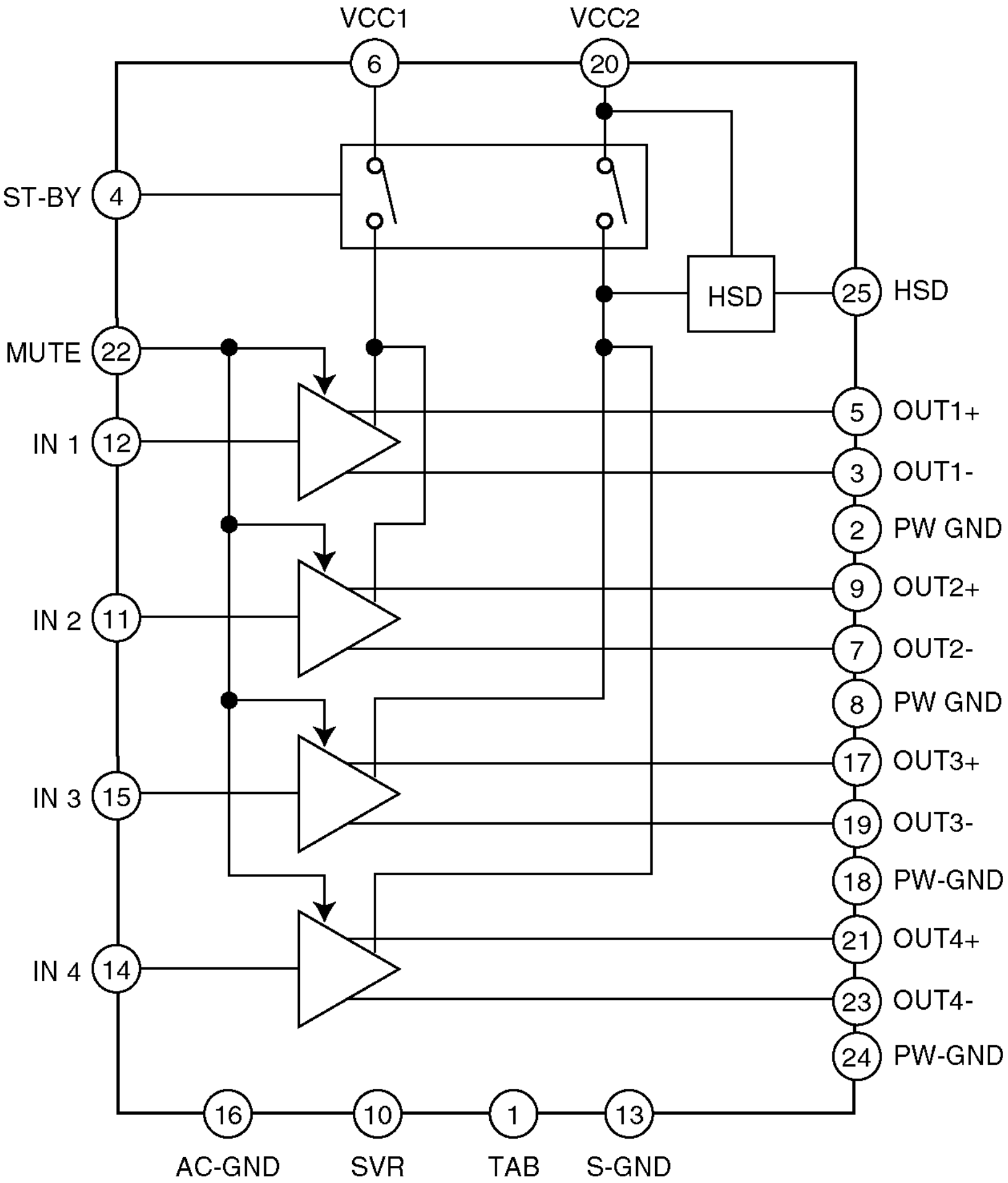
VCC1
6
VCC2
20
ST-BY
4
HSD
25
HSD
MUTE
22
IN 1
12
5
OUT1+
3
OUT1-
2
PW GND
IN 2
11
9
OUT2+
7
OUT2-
8
PW GND
IN 3
15
17
OUT3+
19
OUT3-
18
PW-GND
IN 4
14
21
OUT4+
23
OUT4-
24
PW-GND
16
10
1
13
AC-GND
SVR
TAB
S-GND

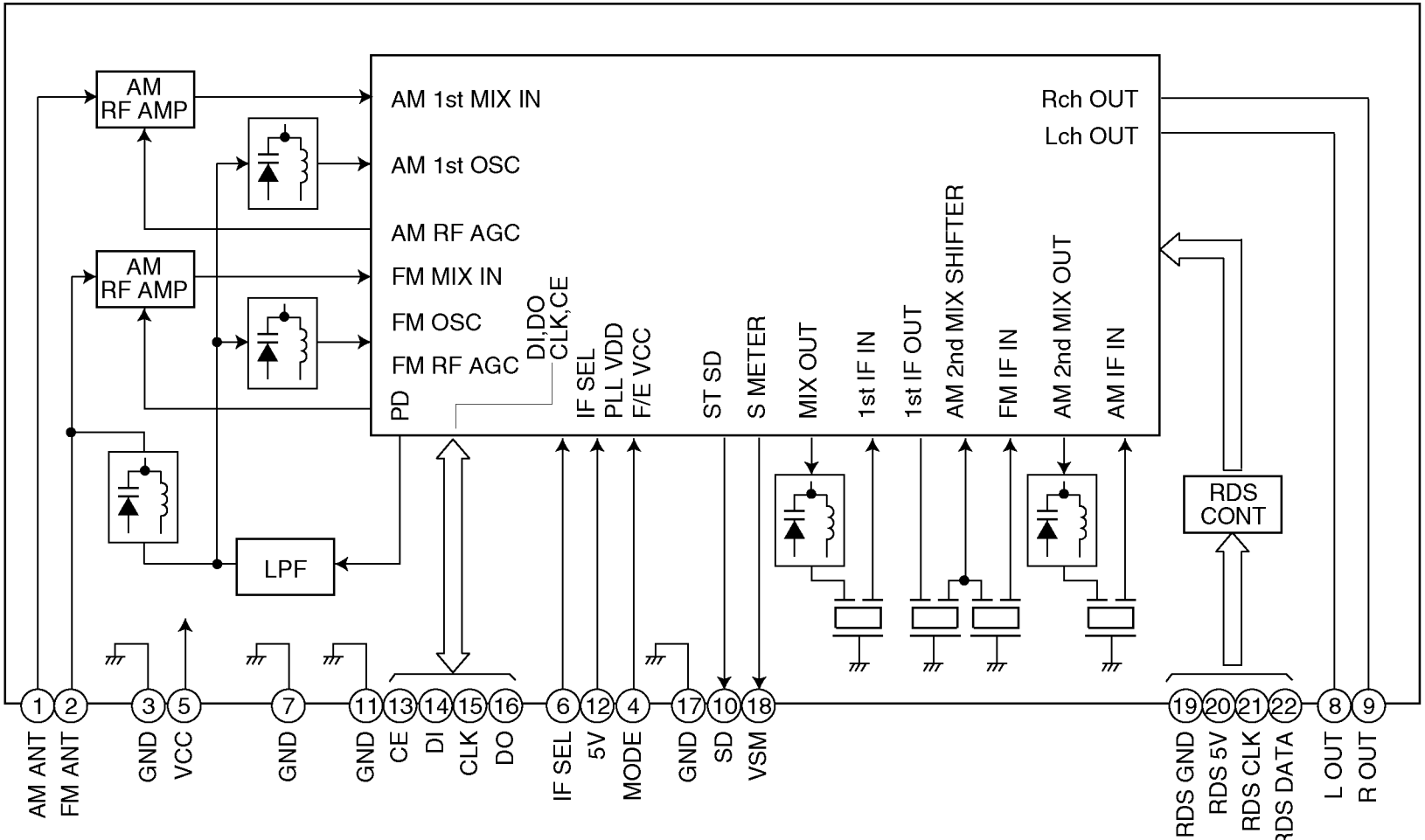
AM RF AMP
AM RF AMP
LPF
AM 1st MIX IN
AM 1st OSC
AM RF AGC
FM MIX IN
FM OSC
FM RF AGC
PD
DI,DO
CLK,CE
IF SEL
PLL VDD
F/E VCC
ST SD
S METER
MIX OUT
1st IF IN
1st IF OUT
AM 2nd MIX SHIFTER
FM IF IN
AM 2nd MIX OUT
AM IF IN
Rch OUT
Lch OUT
RDS CONT
1 AM ANT
2 FM ANT
3 GND
5 VCC
7 GND
11 GND
13 CE
14 DI
15 CLK
16 DO
6 IF SEL
12 5V
4 MODE
17 GND
10 SD
18 VSM
19 RDS GND
20 RDS 5V
21 RDS CLK
22 RDS DATA
8 L OUT
9 R OUT

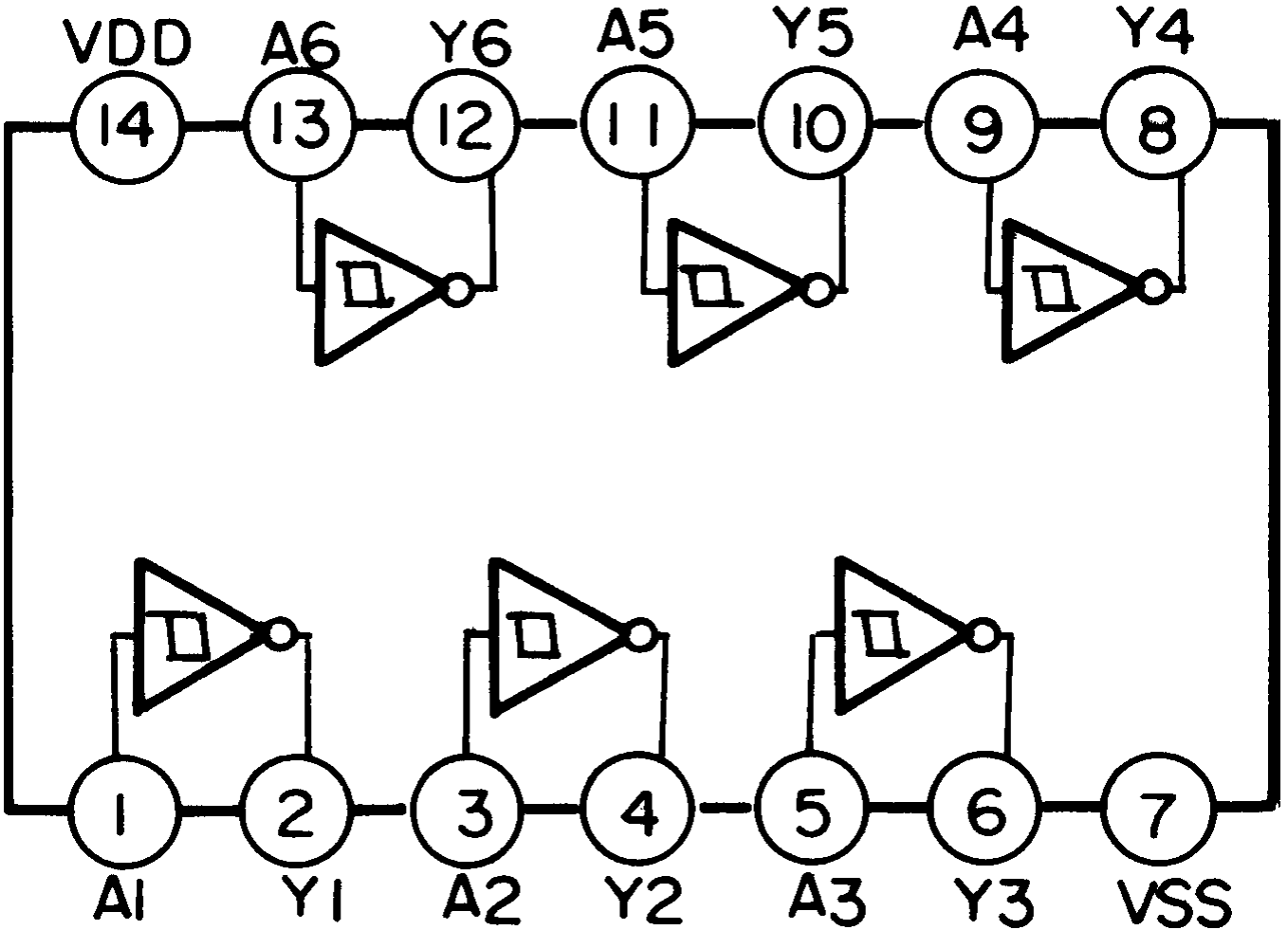
VDD
A6
Y6
A5
Y5
A4
Y4
14
13
12
11
10
9
8
1
2
3
4
5
6
7
A1
Y1
A2
Y2
A3
Y3
VSS

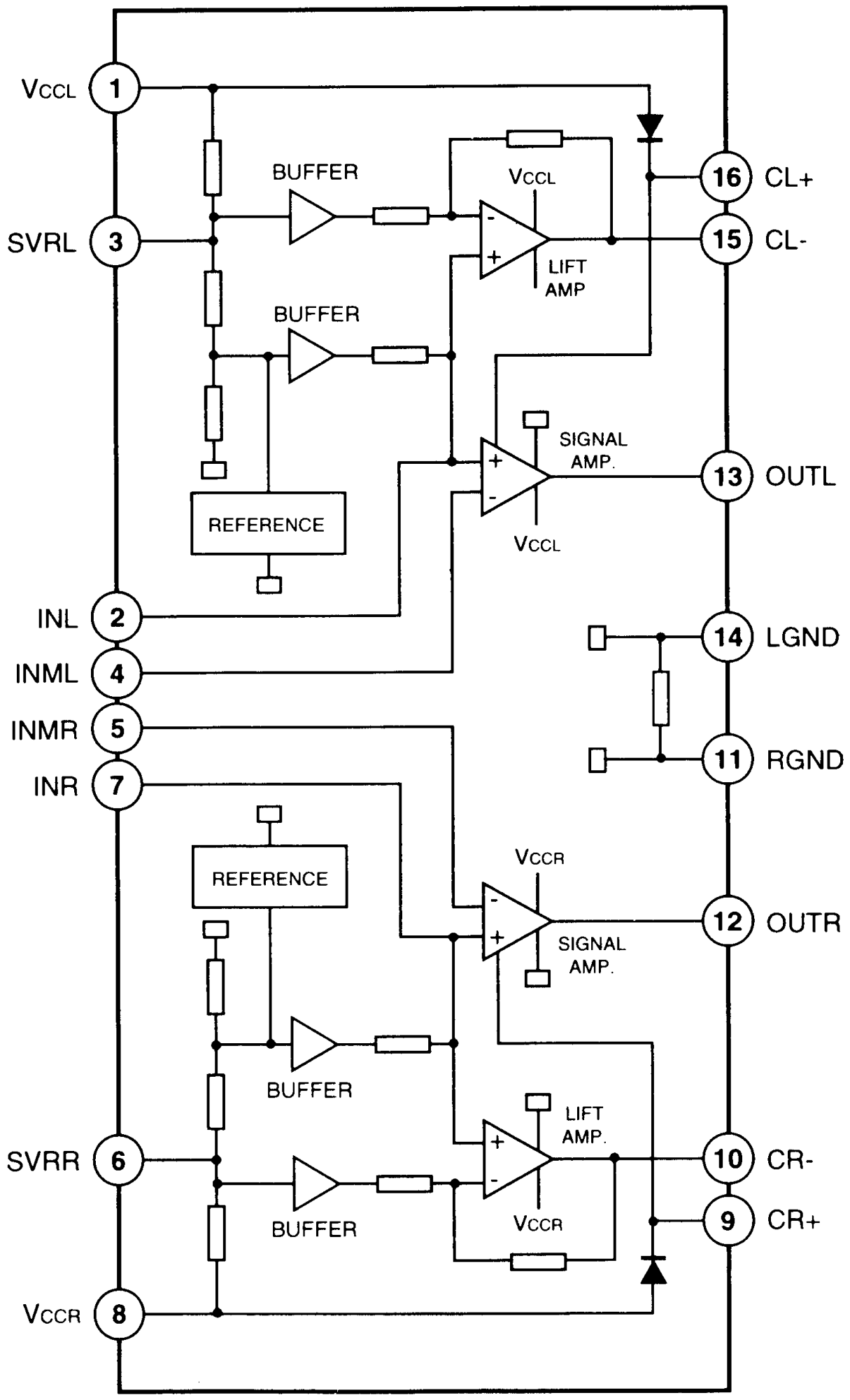
VCCL
1
SVRL
3
INL
2
INML
4
INMR
5
INR
7
SVRR
6
VCCR
8
BUFFER
BUFFER
VCCL
LIFT AMP
SIGNAL AMP.
VCCL
REFERENCE
16
CL+
15
CL-
13
OUTL
14
LGND
11
RGND
REFERENCE
VCCR
SIGNAL AMP.
12
OUTR
BUFFER
LIFT AMP.
BUFFER
VCCR
10
CR-
9
CR+

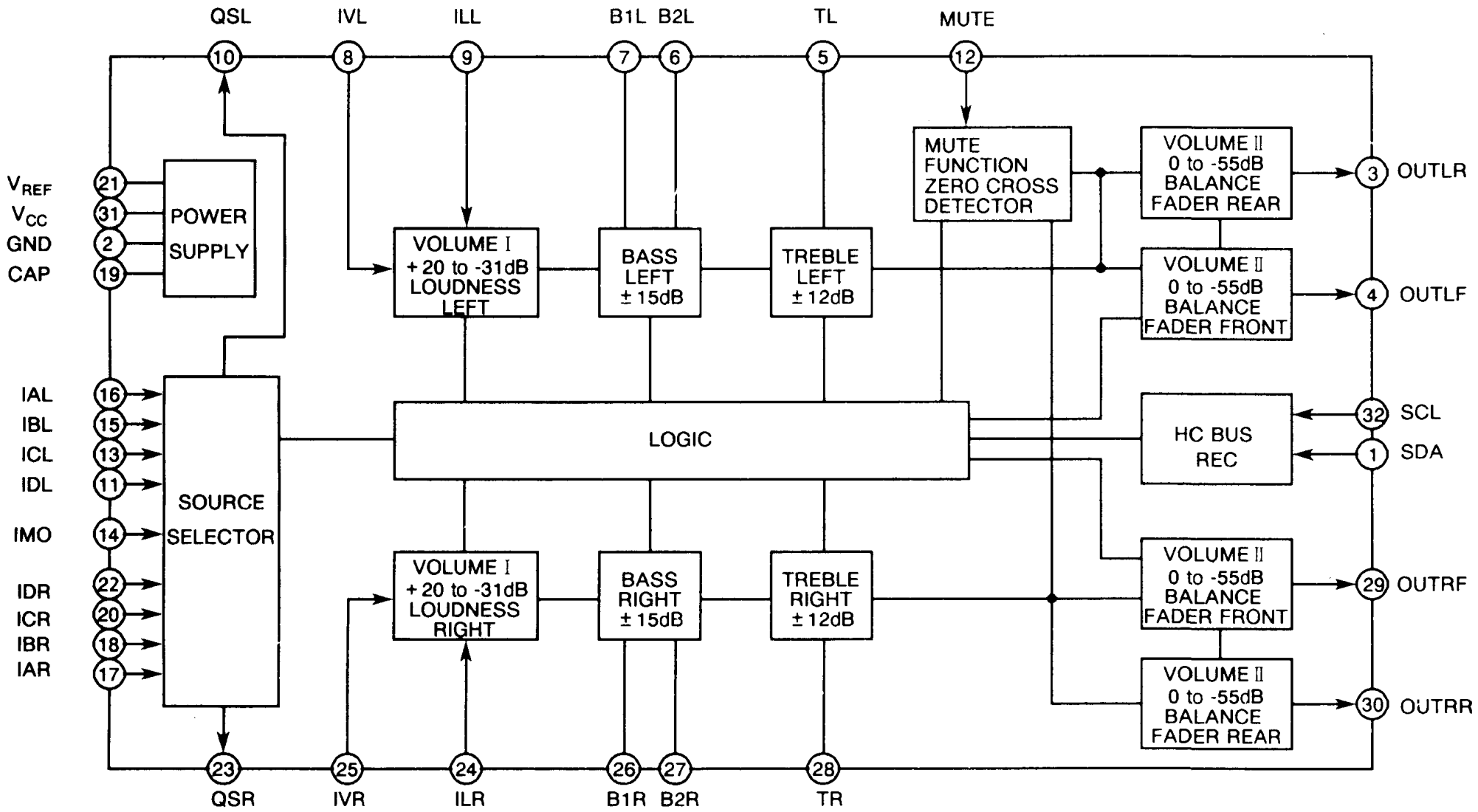
QSL
IVL
ILL
B1L
B2L
TL
MUTE
10
8
9
7
6
5
12
MUTE FUNCTION ZERO CROSS DETECTOR
VOLUME II 0 to -55dB BALANCE FADER REAR
3
OUTLR
VREF
VCC
GND
CAP
21
31
2
19
POWER SUPPLY
VOLUME I +20 to -31dB LOUDNESS LEFT
BASS LEFT ±15dB
TREBLE LEFT ±12dB
VOLUME II 0 to -55dB BALANCE FADER FRONT
4
OUTLF
IAL
IBL
ICL
IDL
IMO
IDR
ICR
IBR
IAR
16
15
13
11
14
22
20
18
17
SOURCE SELECTOR
LOGIC
HC BUS REC
32
SCL
1
SDA
VOLUME I +20 to -31dB LOUDNESS RIGHT
BASS RIGHT ±15dB
TREBLE RIGHT ±12dB
VOLUME II 0 to -55dB BALANCE FADER FRONT
29
OUTRF
VOLUME II 0 to -55dB BALANCE FADER REAR
30
OUTRR
23
25
24
26
27
28
QSR
IVR
ILR
B1R
B2R
TR

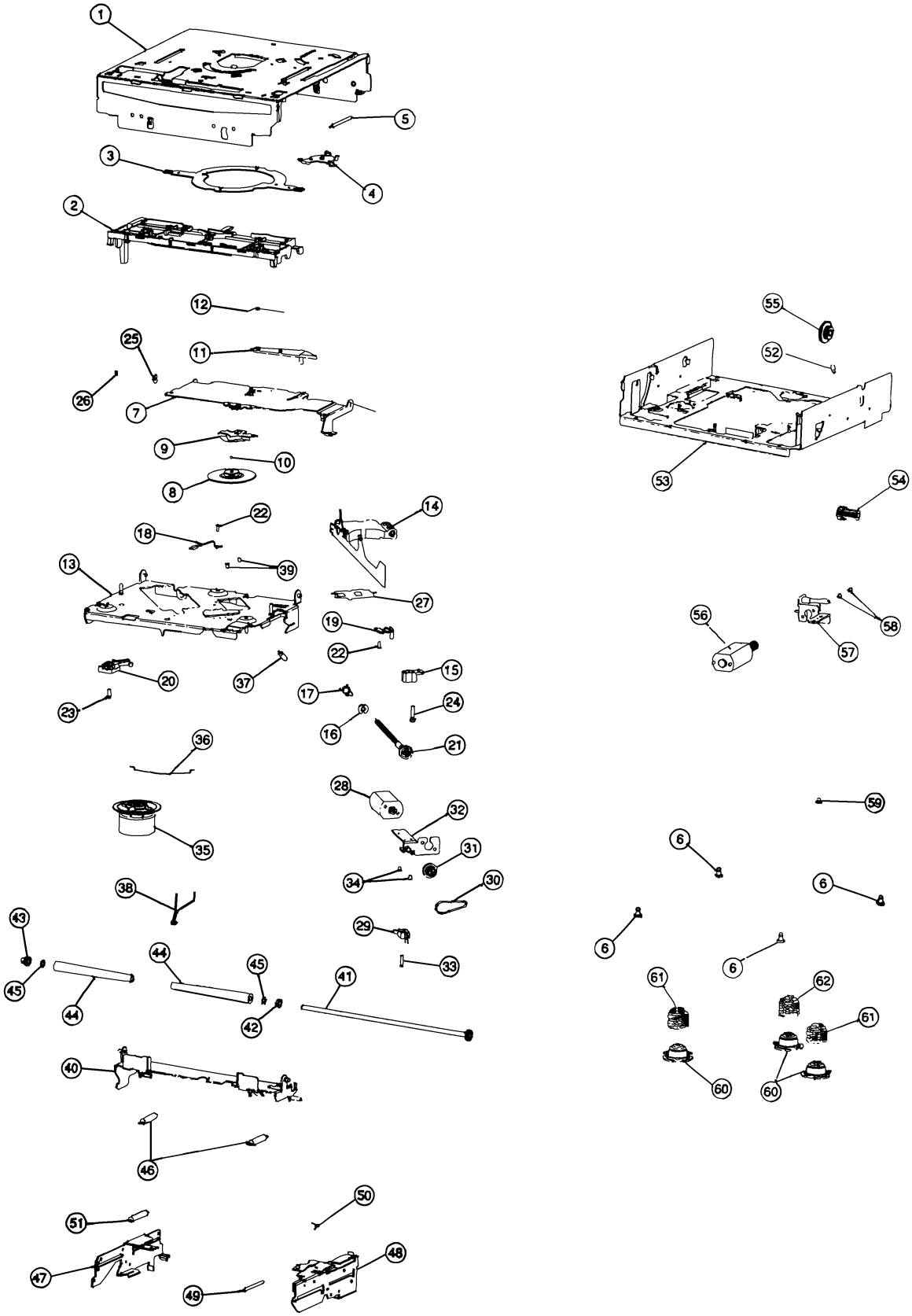

NCD8
'99.1.10

A B C

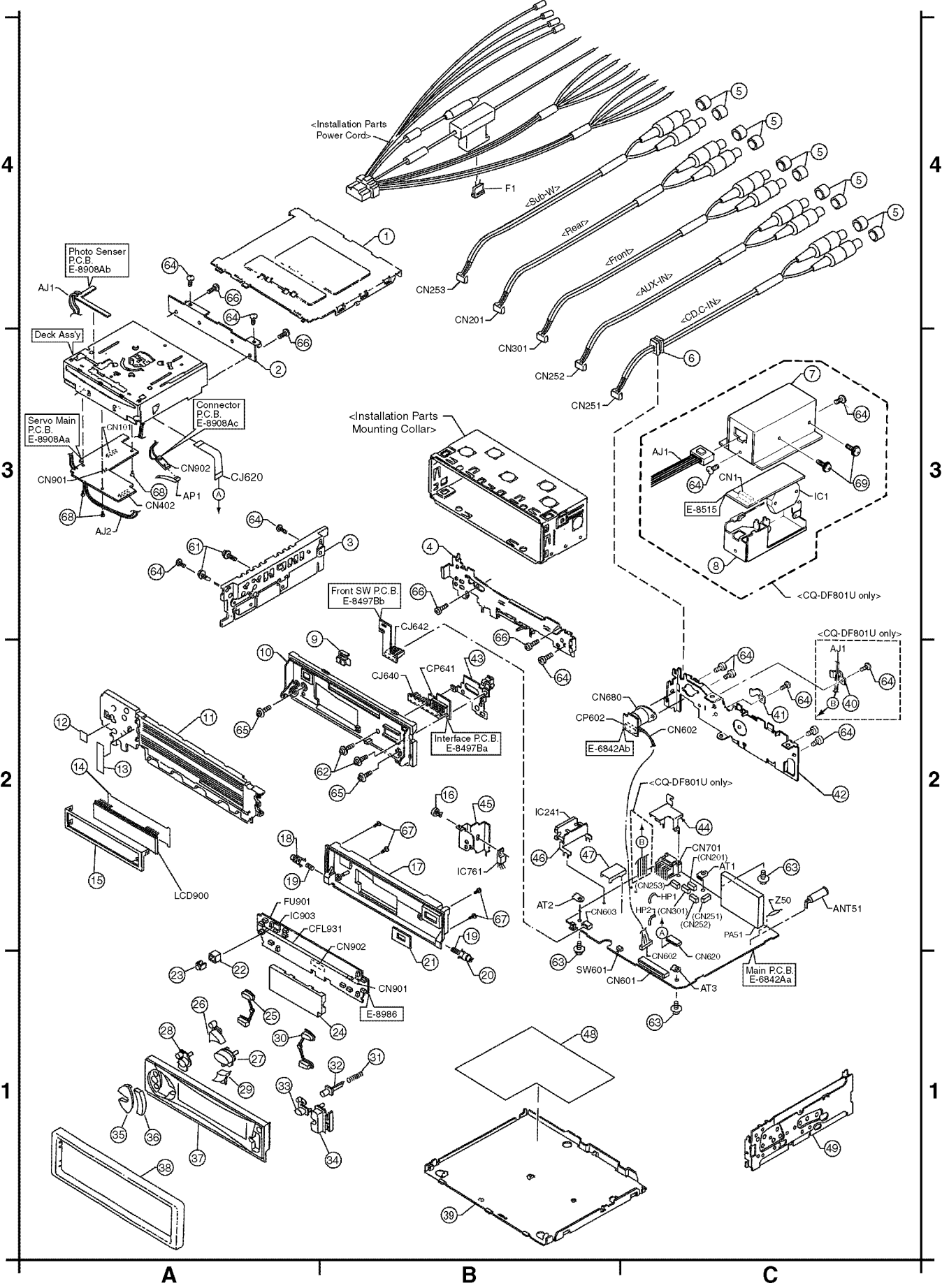
<Installation Parts Power Cord>
F1
<Sub-W>
<Rear>
<Front>
<AUX-IN>
<CD.C-IN>
CN253
CN201
CN301
CN252
CN251
Photo Senser P.C.B. E-8908Ab
AJ1
Deck Ass'y
Servo Main P.C.B. E-8908Aa
CN101
CN901
CN402
AJ2
Connector P.C.B. E-8908Ac
CN902
CJ620
AP1
<Installation Parts Mounting Collar>
Front SW P.C.B. E-8497Bb
CJ642
CJ640
CP641
Interface P.C.B. E-8497Ba
LCD900
FU901
IC903
CFL931
CN902
CN901
E-8986
IC761
<CQ-DF801U only>
CN1
IC1
E-8515
CN680
CP602
CN602
E-6842Ab
IC241
CN603
AT2
CN701
(CN201)
AT1
(CN253)
HP1
HP2
(CN301)
(CN251)
(CN252)
Z50
ANT51
PA51
CN602
CN620
SW601
CN601
AT3
Main P.C.B. E-6842Aa
A
B
C

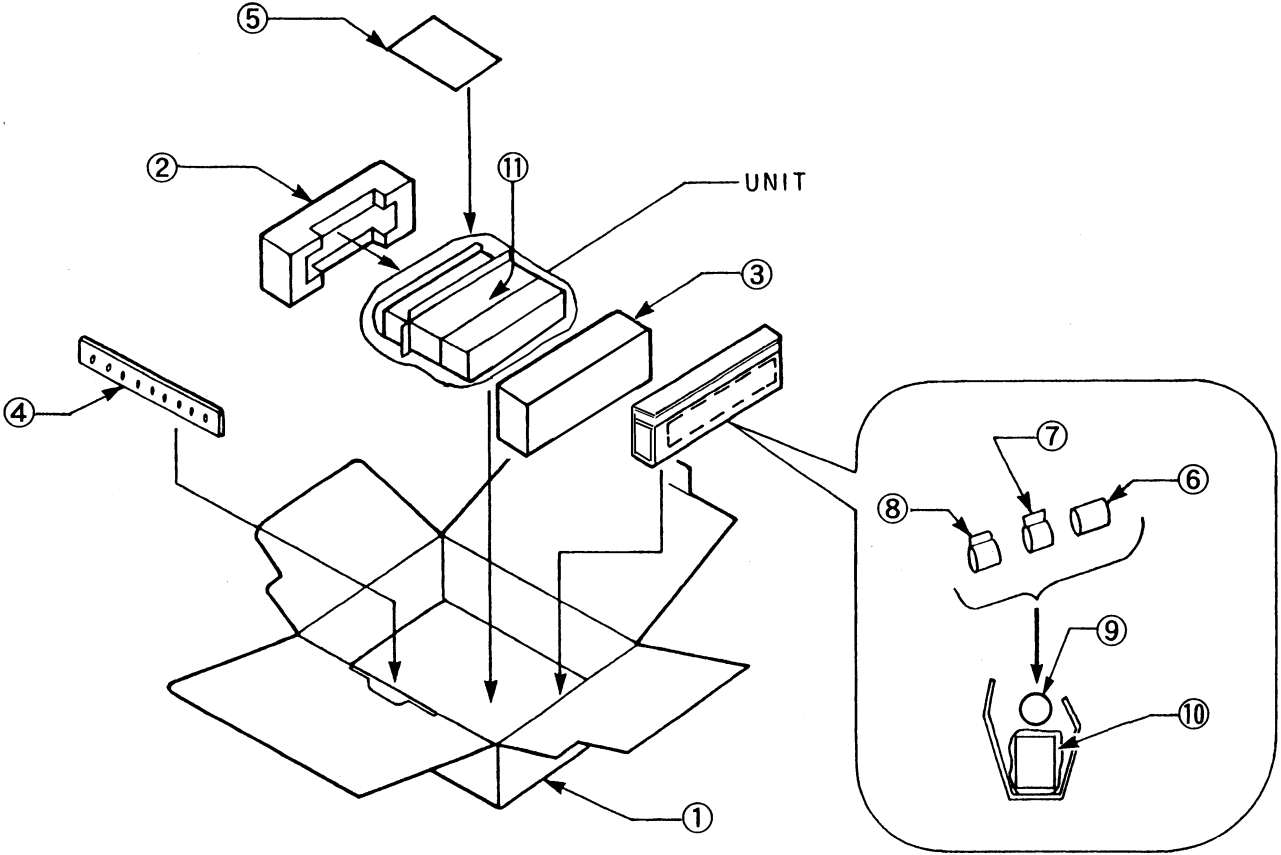
⑤
②
⑪
UNIT
③
④
⑦
⑥
⑧
⑨
⑩
①

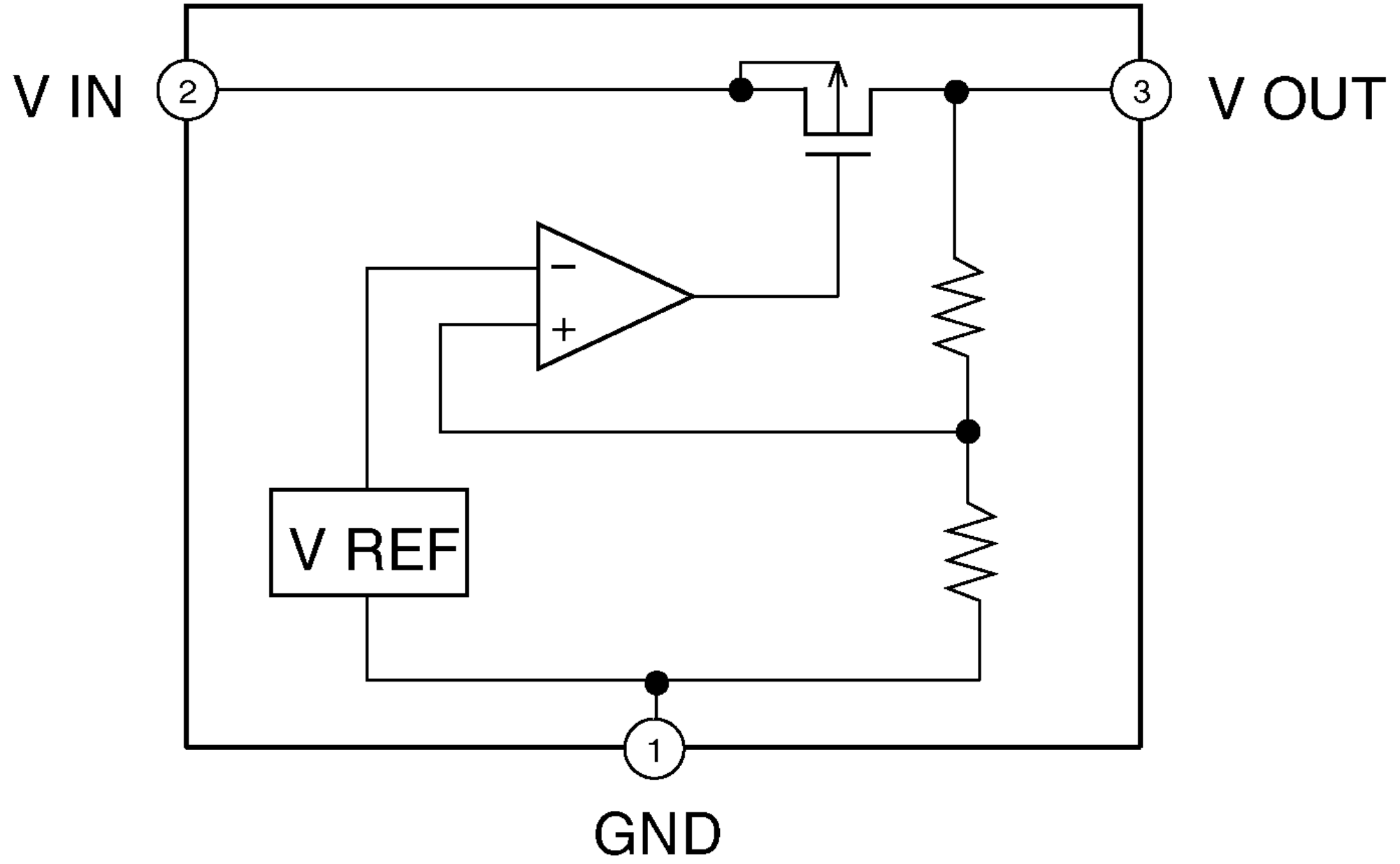
V IN
2
3
V OUT
−
+
V REF
1
GND

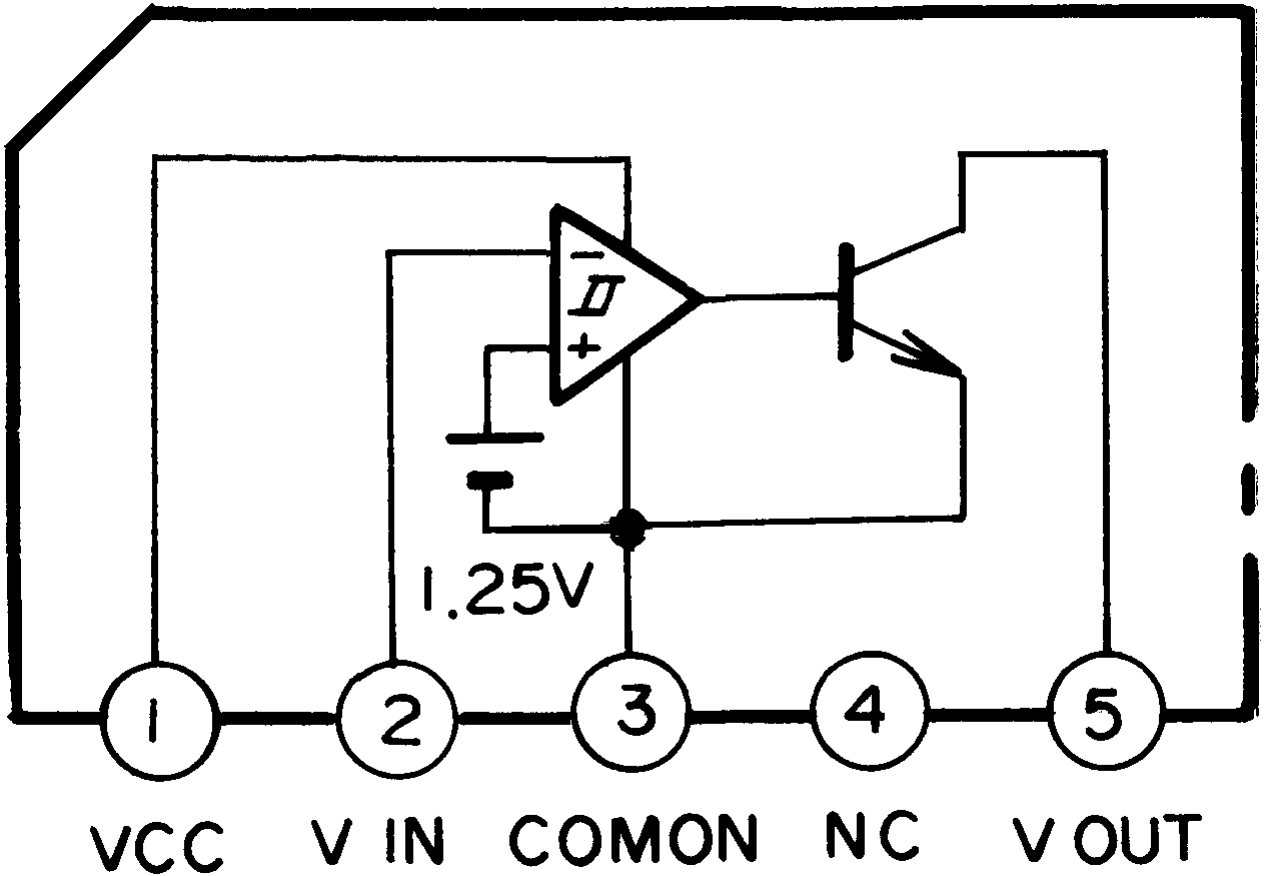
1.25V
1
2
3
4
5
VCC
V IN
COMON
NC
V OUT

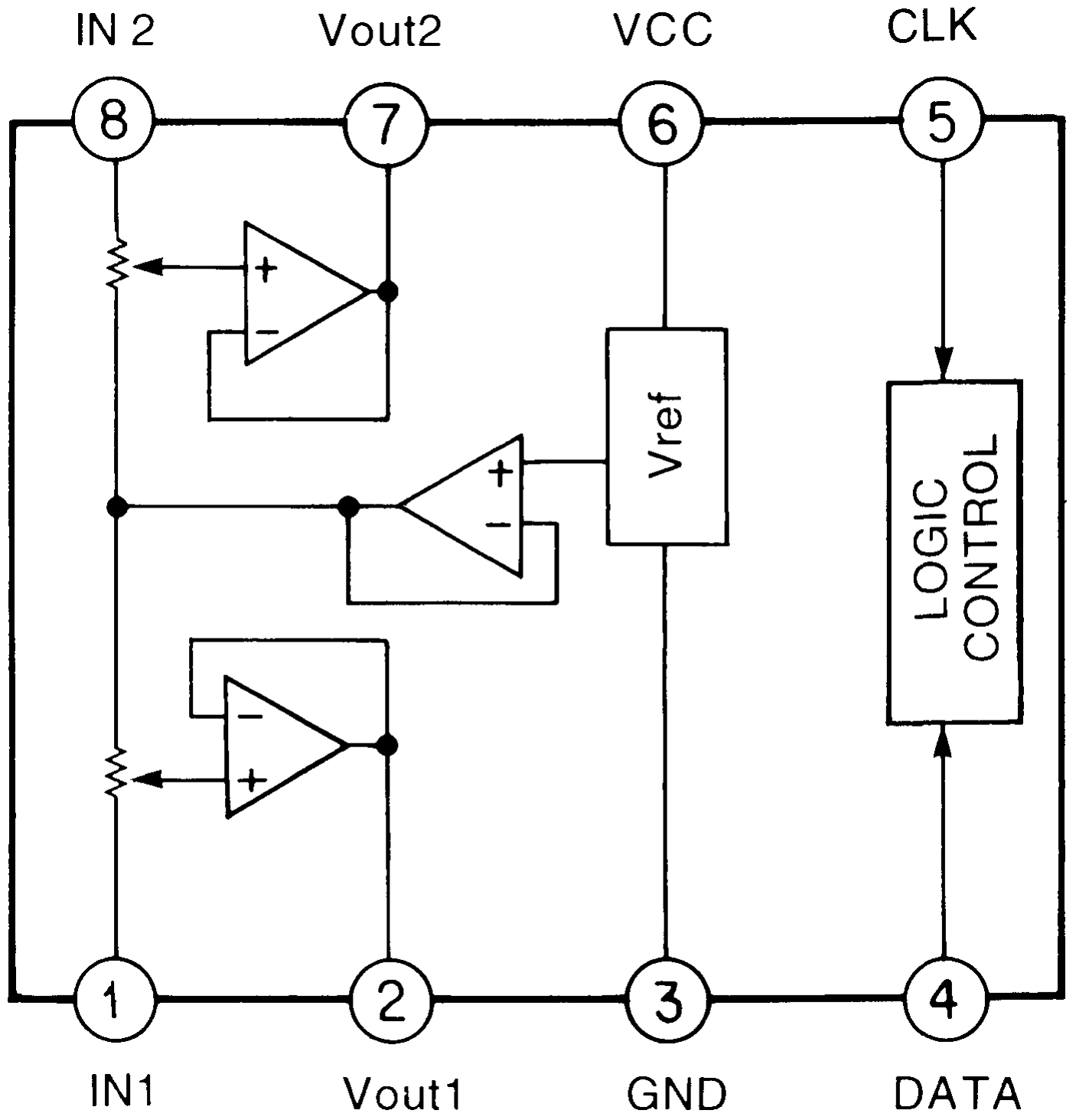
IN 2
Vout2
VCC
CLK
8
7
6
5
Vref
LOGIC CONTROL
1
2
3
4
IN1
Vout1
GND
DATA

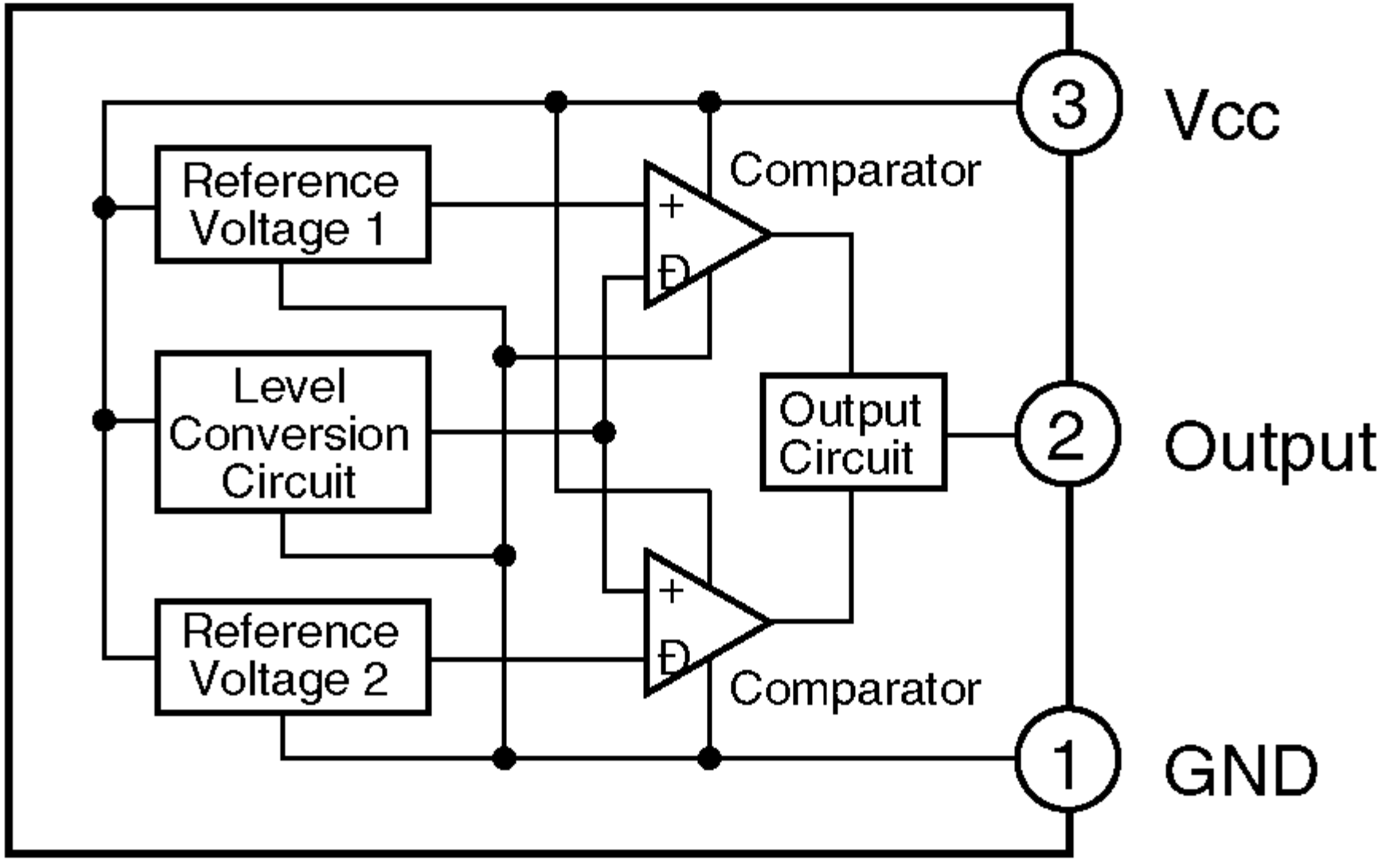
Reference Voltage 1
Level Conversion Circuit
Reference Voltage 2
Comparator
Comparator
Output Circuit
3
Vcc
2
Output
1
GND

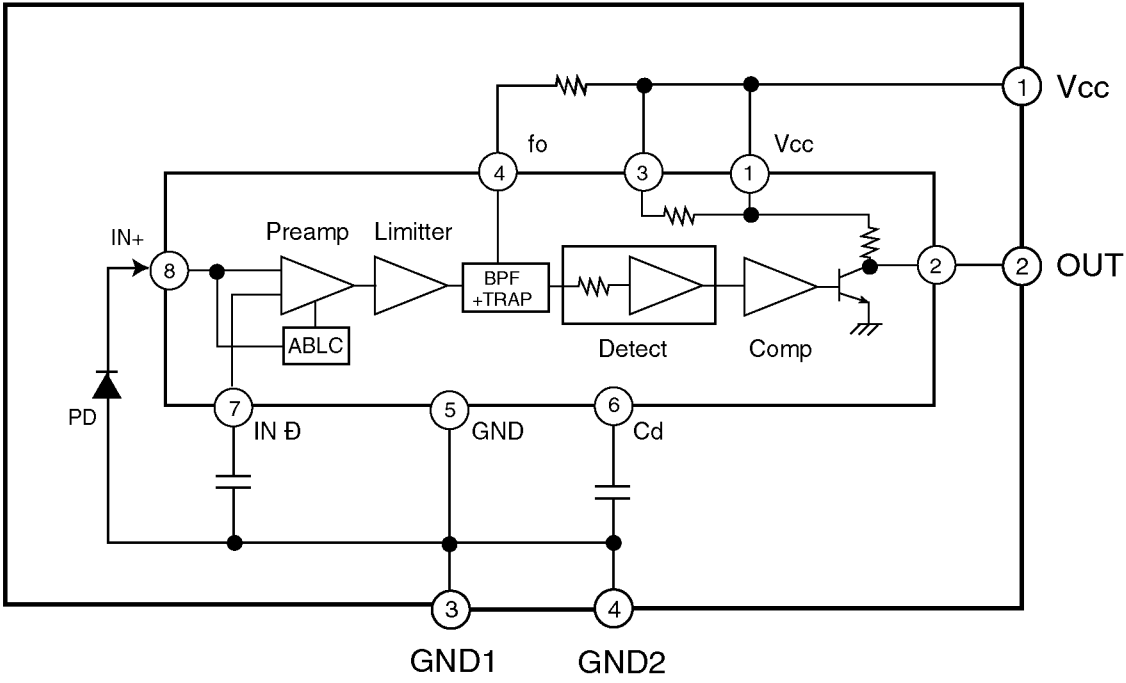
Vcc
1
fo
Vcc
4
3
1
IN+
8
Preamp
Limitter
BPF
+TRAP
2
2
OUT
ABLC
Detect
Comp
PD
7
IN Đ
5
GND
6
Cd
3
4
GND1
GND2

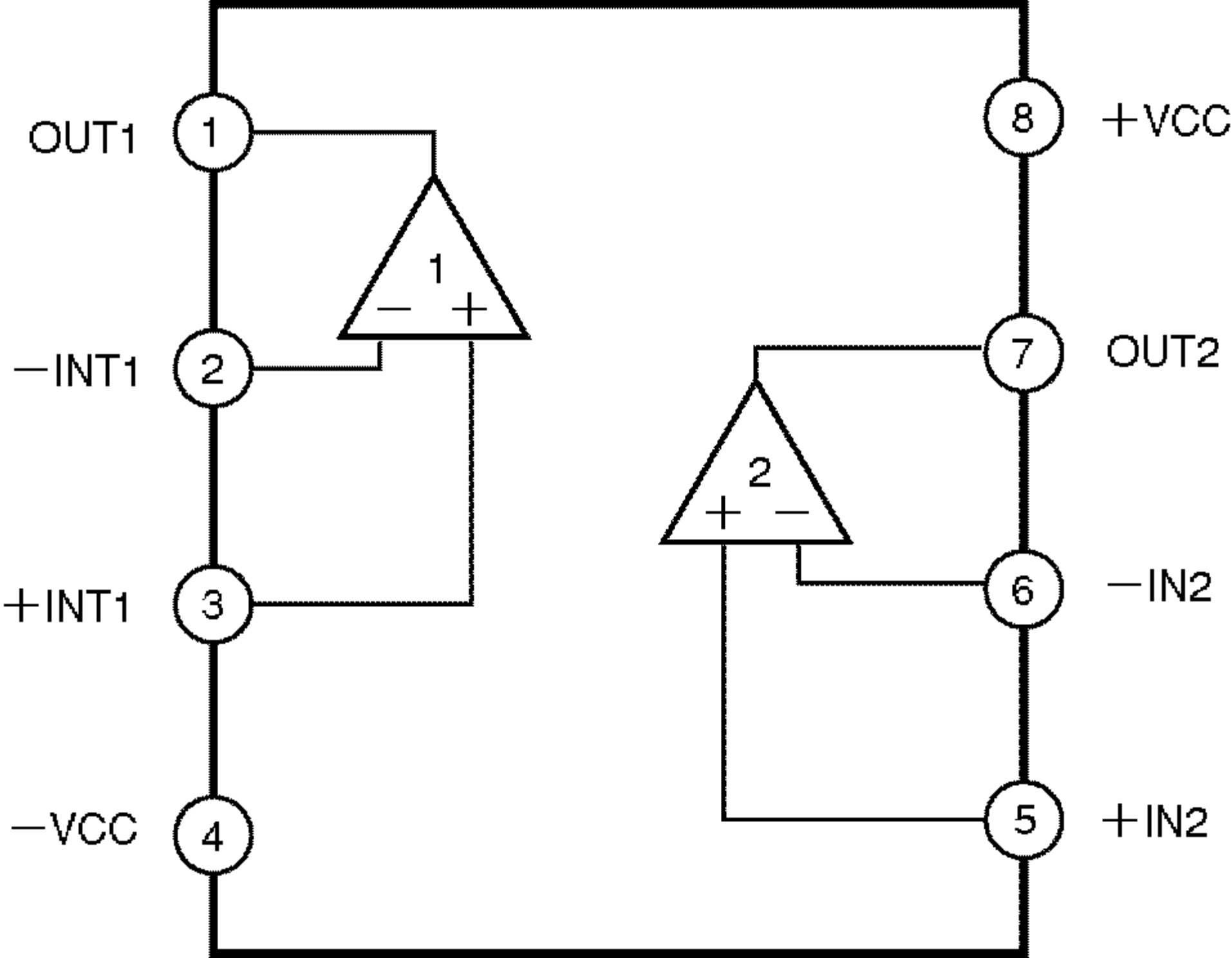
OUT1
1
−INT1
2
+INT1
3
−VCC
4
8
+VCC
7
OUT2
6
−IN2
5
+IN2
1
2

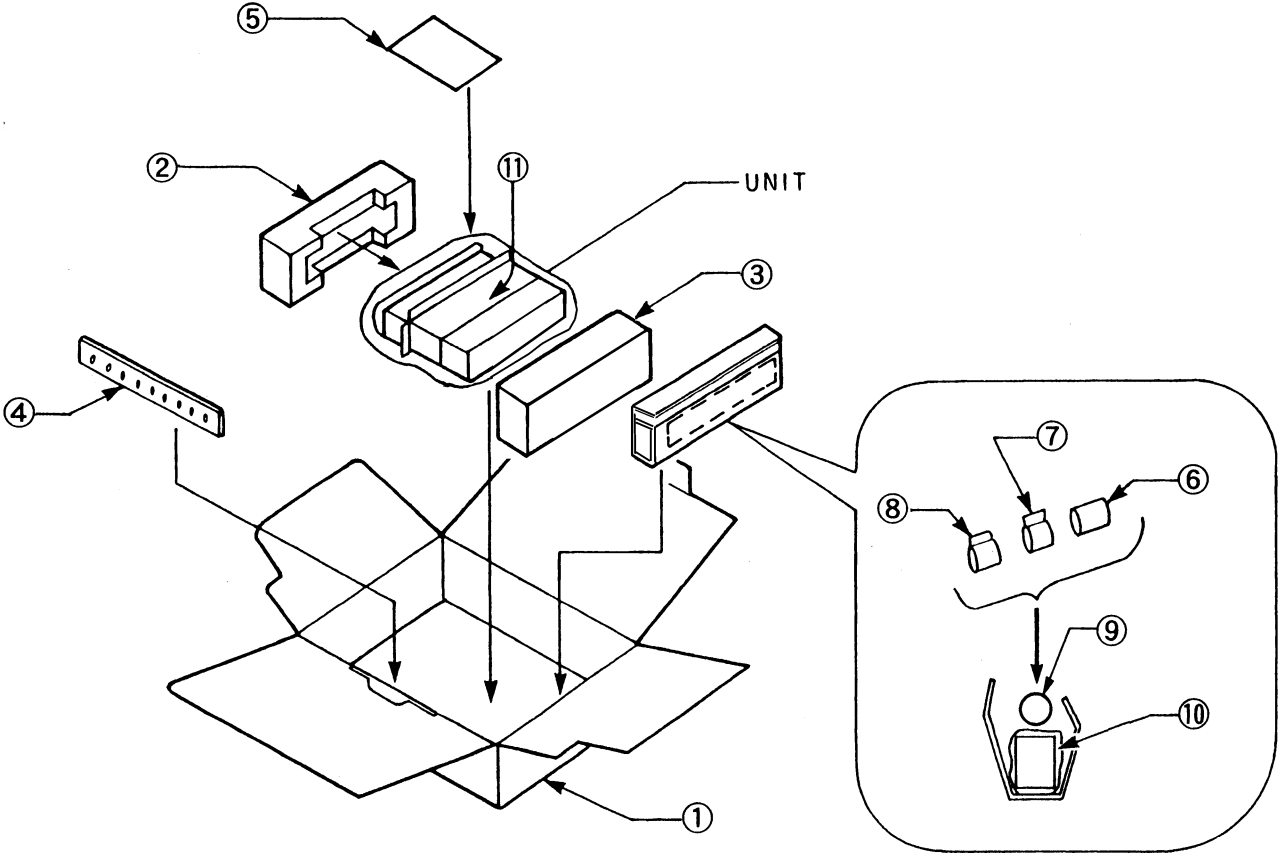
⑤
②
⑪
UNIT
③
④
⑦
⑥
⑧
⑨
⑩
①

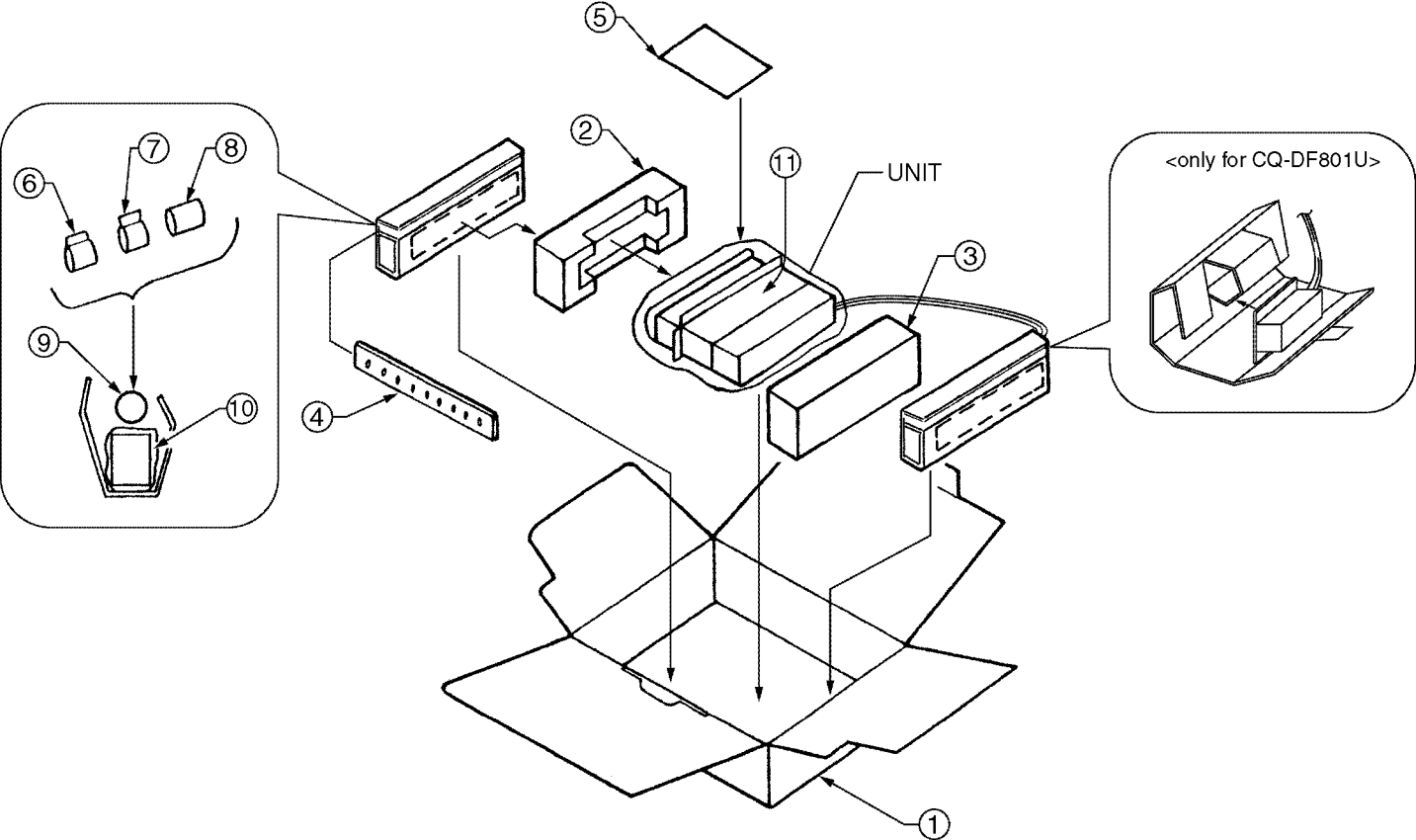
⑤
②
⑪
UNIT
③
<only for CQ-DF801U>
⑥
⑦
⑧
⑨
⑩
④
①

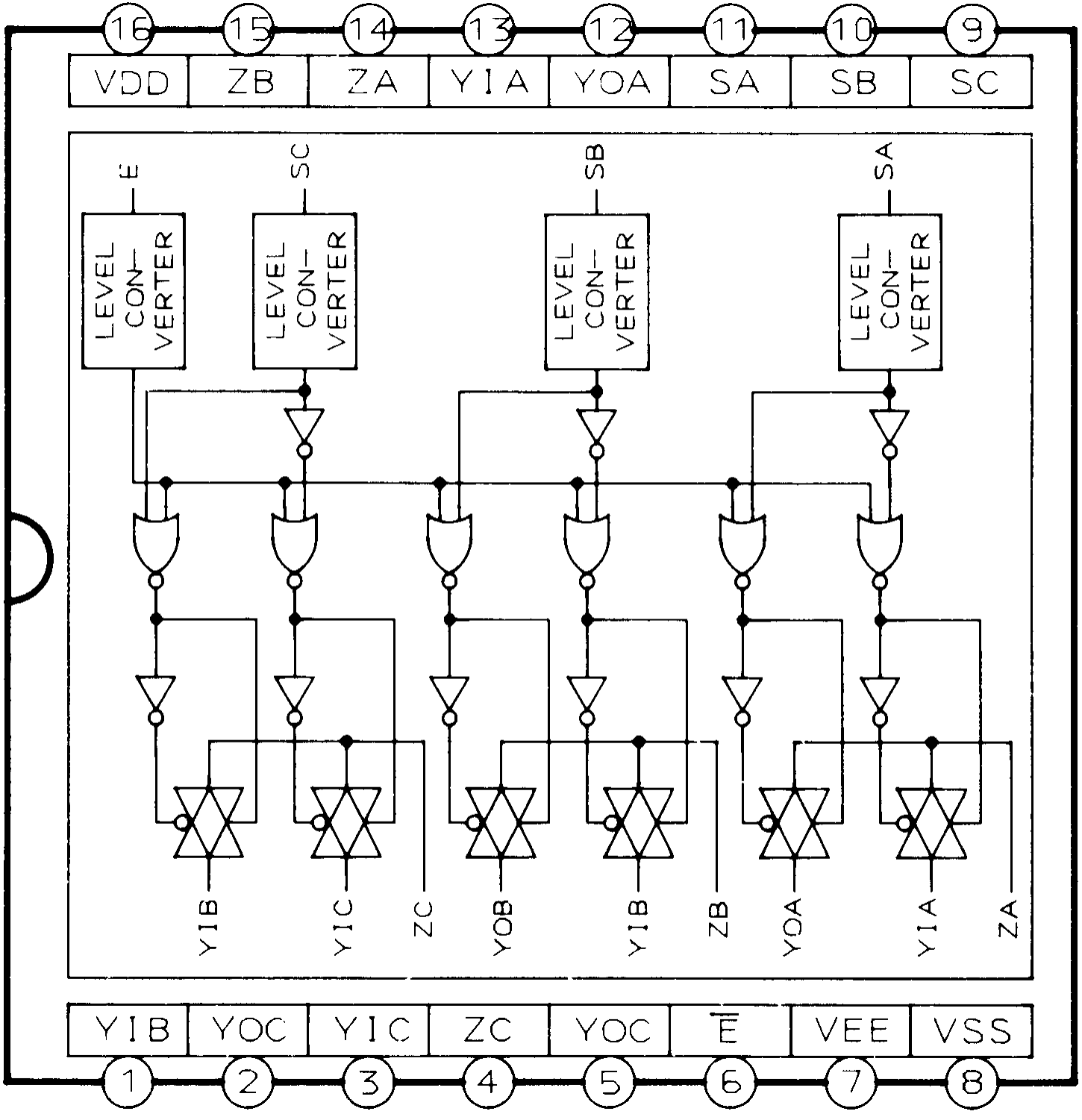
16
15
14
13
12
11
10
9
VDD
ZB
ZA
YIA
YOA
SA
SB
SC
E
SC
SB
SA
LEVEL CON- VERTER
LEVEL CON- VERTER
LEVEL CON- VERTER
LEVEL CON- VERTER
YIB
YIC
ZC
YOB
YIB
ZB
YOA
YIA
ZA
YIB
YOC
YIC
ZC
YOC
$\overline{E}$
VEE
VSS
1
2
3
4
5
6
7
8

Printed in Japan (K)
2001.2
(Recycled Paper)

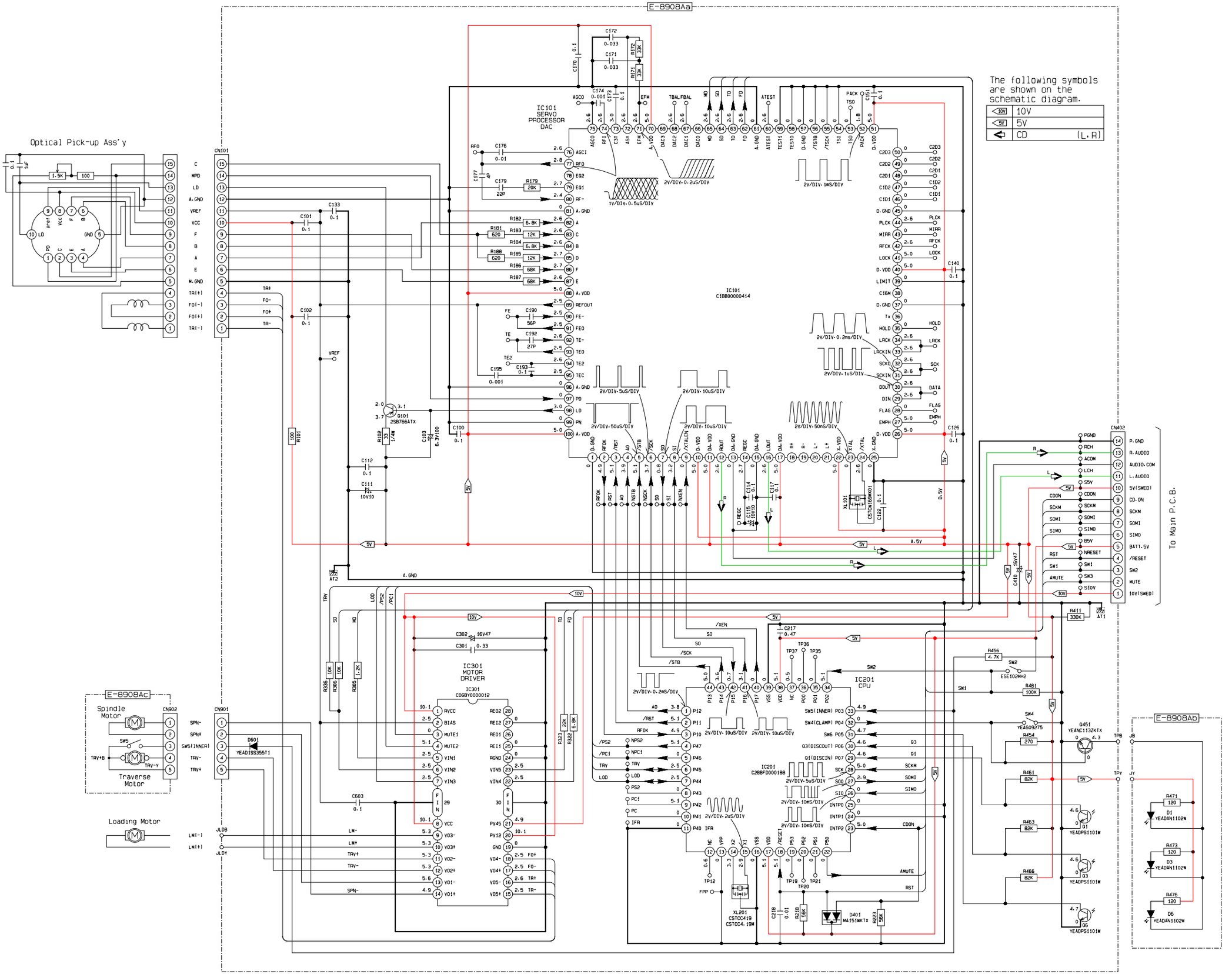
E-8908Aa
Optical Pick-up Ass'y
IC101
SERVO
PROCESSOR
DAC
IC101
C1BB00000414
The following symbols
are shown on the
schematic diagram.
10V
5V
CD (L,R)
IC301
MOTOR
DRIVER
IC301
C0GBY0000012
IC201
CPU
IC201
C2BBFD00018B
CN101
CN402
To Main P.C.B.
E-8908Ac
Spindle
Motor
Traverse
Motor
CN902
CN901
Loading Motor
E-8908Ab

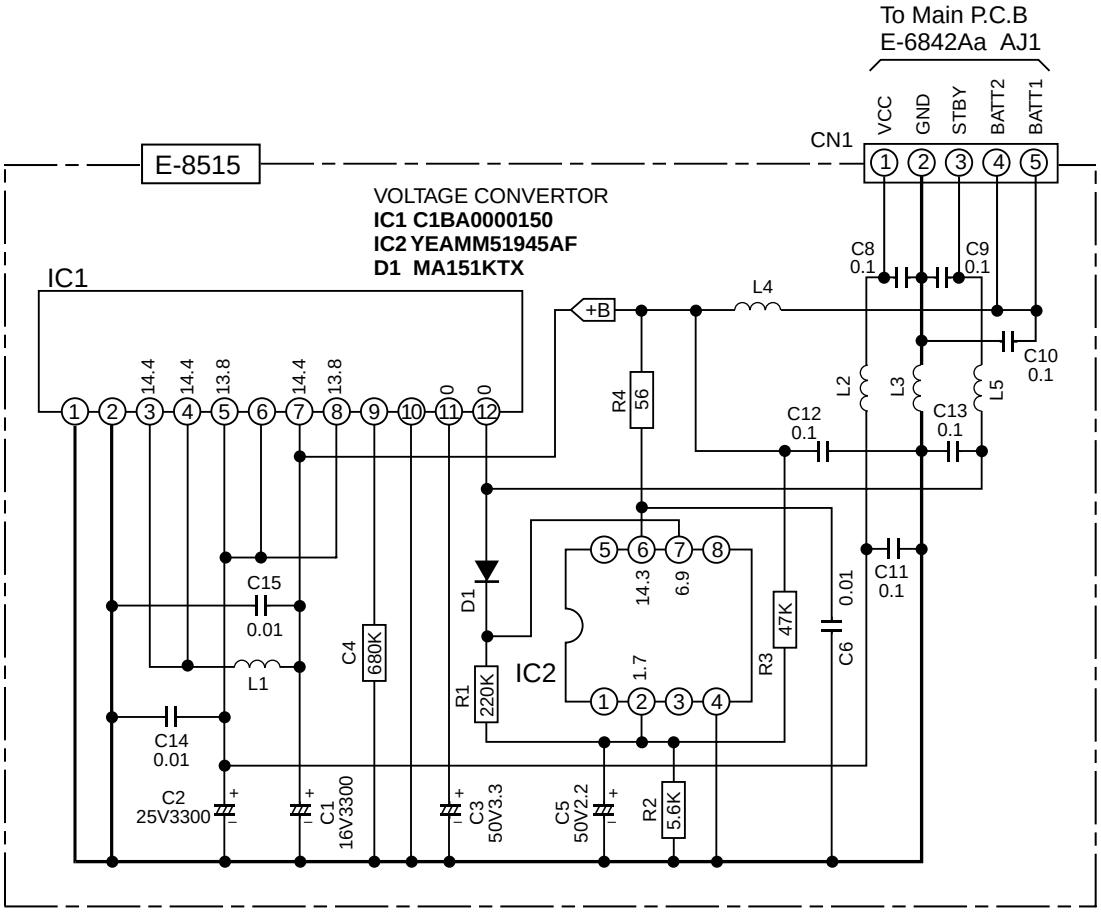
To Main P.C.B
E-6842Aa AJ1
CN1
VCC
GND
STBY
BATT2
BATT1
E-8515
VOLTAGE CONVERTOR
IC1 C1BA0000150
IC2 YEAMM51945AF
D1 MA151KTX
IC1
+B
L4
C8
0.1
C9
0.1
C10
0.1
L2
L3
L5
C12
0.1
C13
0.1
R4
56
14.4
14.4
13.8
14.4
13.8
0
0
C15
0.01
L1
C14
0.01
C4
680K
D1
R1
220K
IC2
14.3
6.9
1.7
R3
47K
C6
0.01
C11
0.1
C2
25V3300
C1
16V3300
C3
50V3.3
C5
50V2.2
R2
5.6K

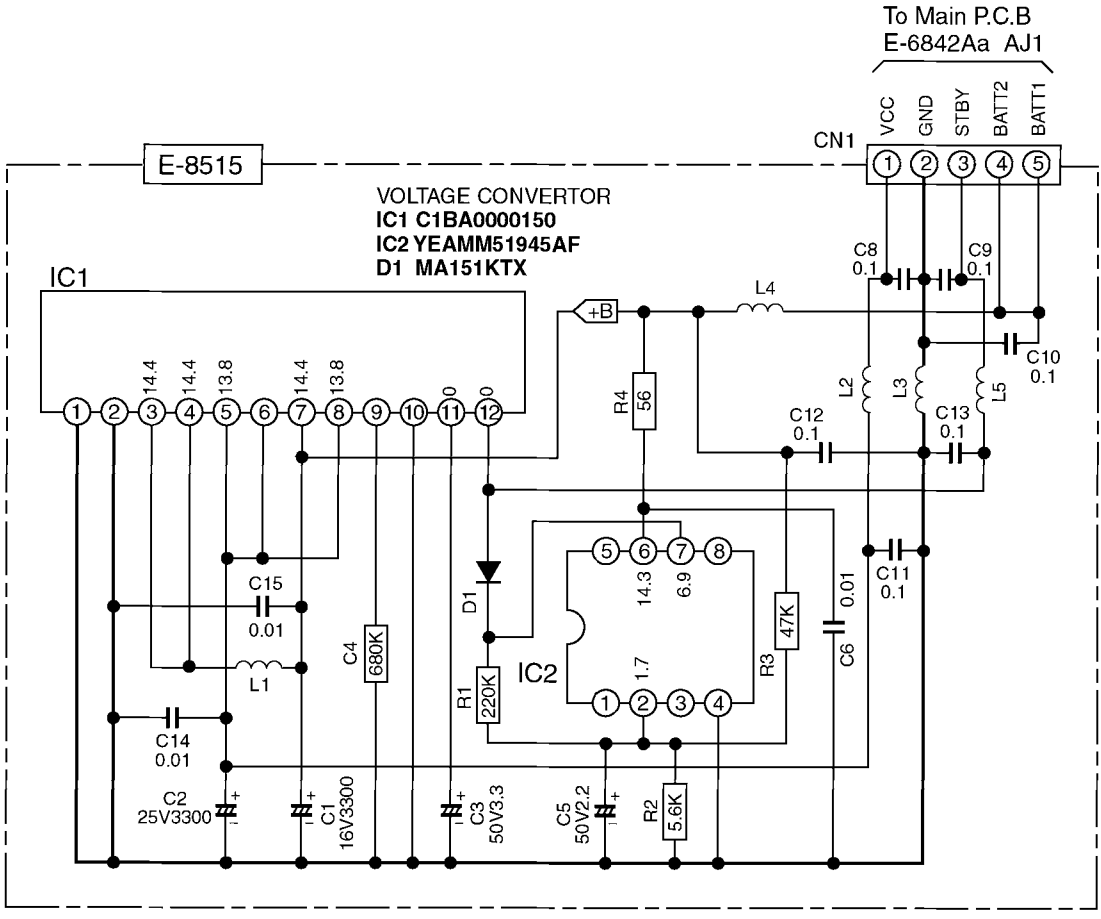
To Main P.C.B
E-6842Aa AJ1
CN1
VCC
GND
STBY
BATT2
BATT1
E-8515
VOLTAGE CONVERTOR
IC1 C1BA0000150
IC2 YEAMM51945AF
D1 MA151KTX
IC1
+B
L4
C8
0.1
C9
0.1
C10
0.1
L2
L3
L5
C12
0.1
C13
0.1
R4
56
14.4
14.4
13.8
14.4
13.8
0
0
C15
0.01
L1
C14
0.01
C4
680K
D1
R1
220K
IC2
14.3
6.9
1.7
R3
47K
C6
0.01
C11
0.1
C2
25V3300
C1
16V3300
C3
50V3.3
C5
50V2.2
R2
5.6K

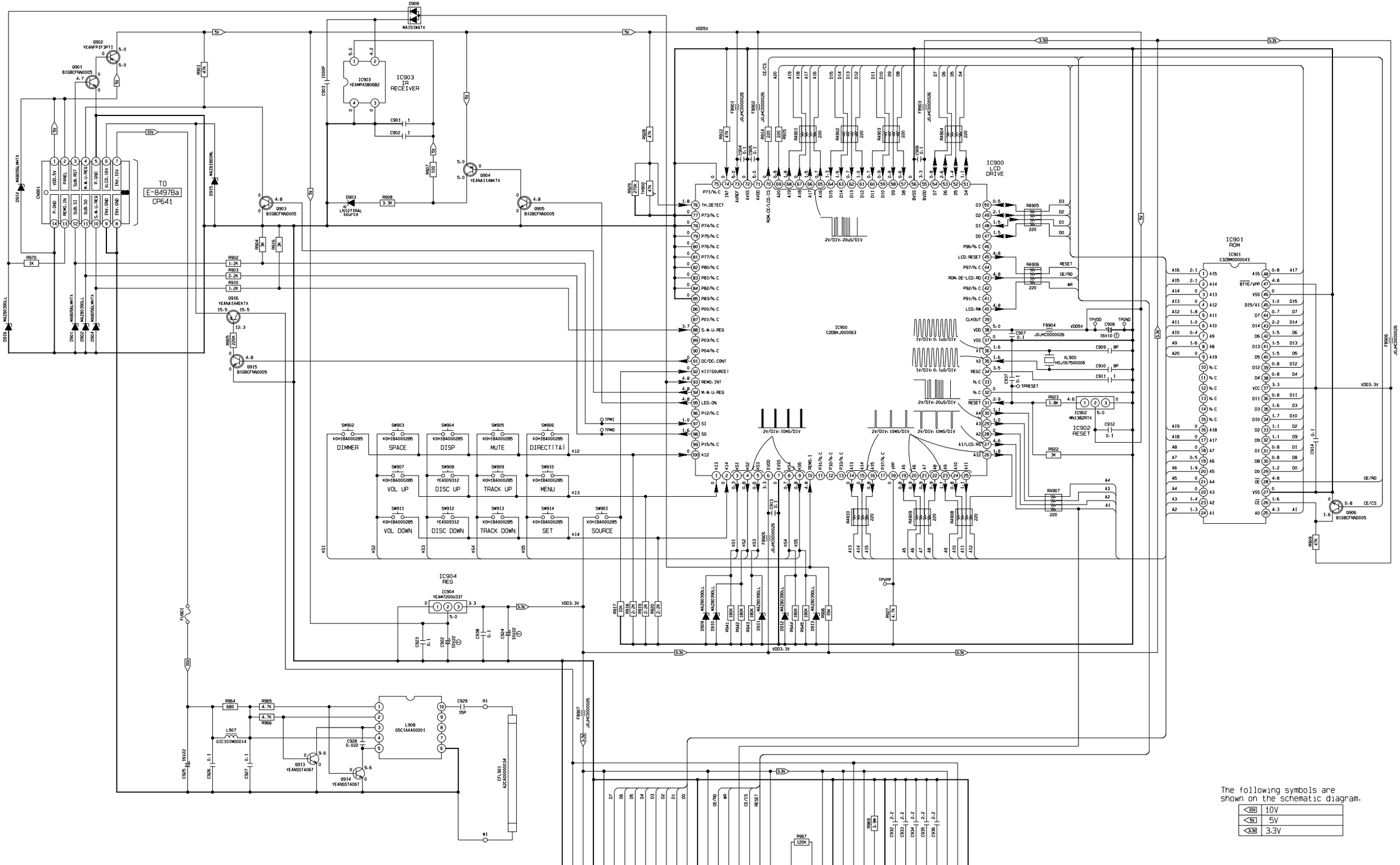

The following symbols are shown on the schematic diagram.

<10V	10V
<5V	5V
<3.3V	3.3V

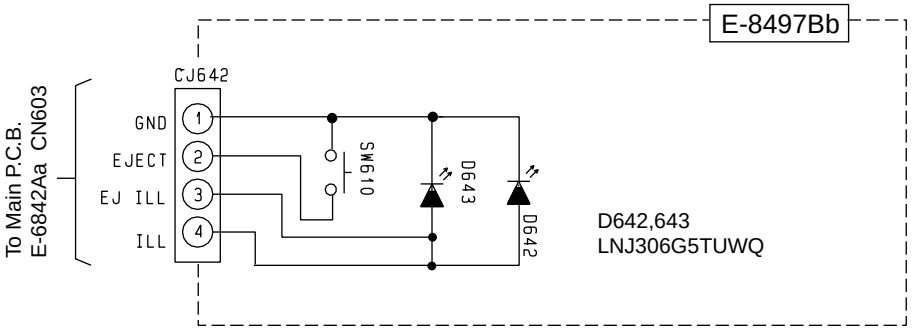
E-8497Bb
CJ642
To Main P.C.B.
E-6842Aa CN603
GND
EJECT
EJ ILL
ILL
1
2
3
4
SW610
D643
D642
D642,643
LNJ306G5TUWQ

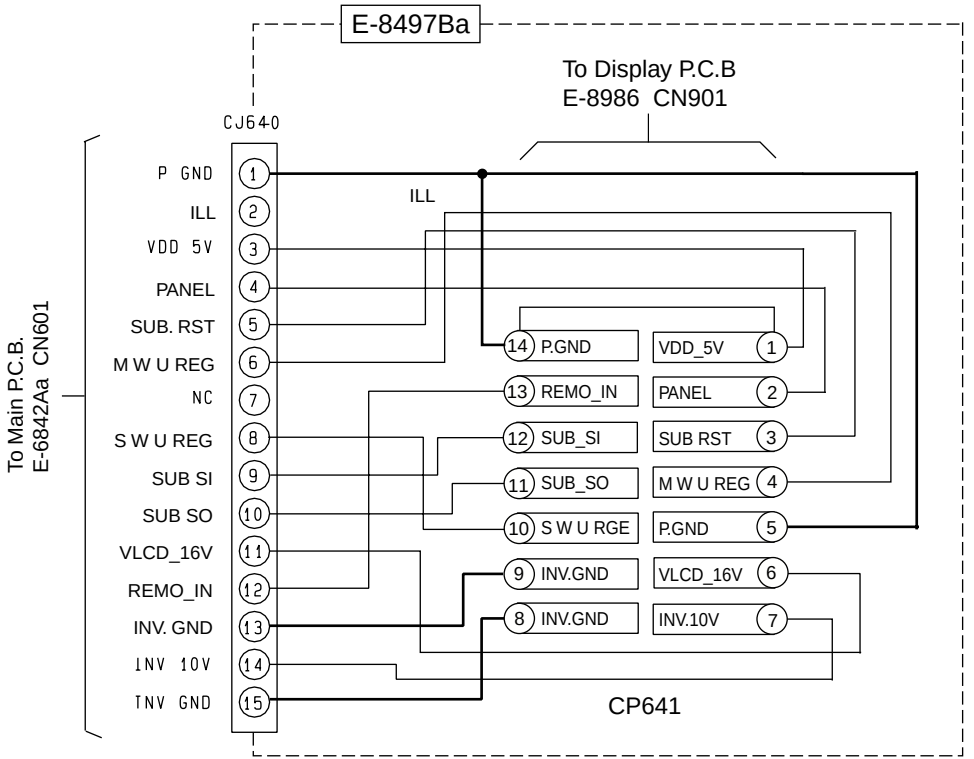
E-8497Ba
To Display P.C.B
E-8986 CN901
CJ640
To Main P.C.B.
E-6842Aa CN601
P GND
ILL
VDD 5V
PANEL
SUB. RST
M W U REG
NC
S W U REG
SUB SI
SUB SO
VLCD_16V
REMO_IN
INV. GND
INV 10V
INV GND
1
2
3
4
5
6
7
8
9
10
11
12
13
14
15
ILL
14 P.GND
13 REMO_IN
12 SUB_SI
11 SUB_SO
10 S W U RGE
9 INV.GND
8 INV.GND
VDD_5V 1
PANEL 2
SUB RST 3
M W U REG 4
P.GND 5
VLCD_16V 6
INV.10V 7
CP641

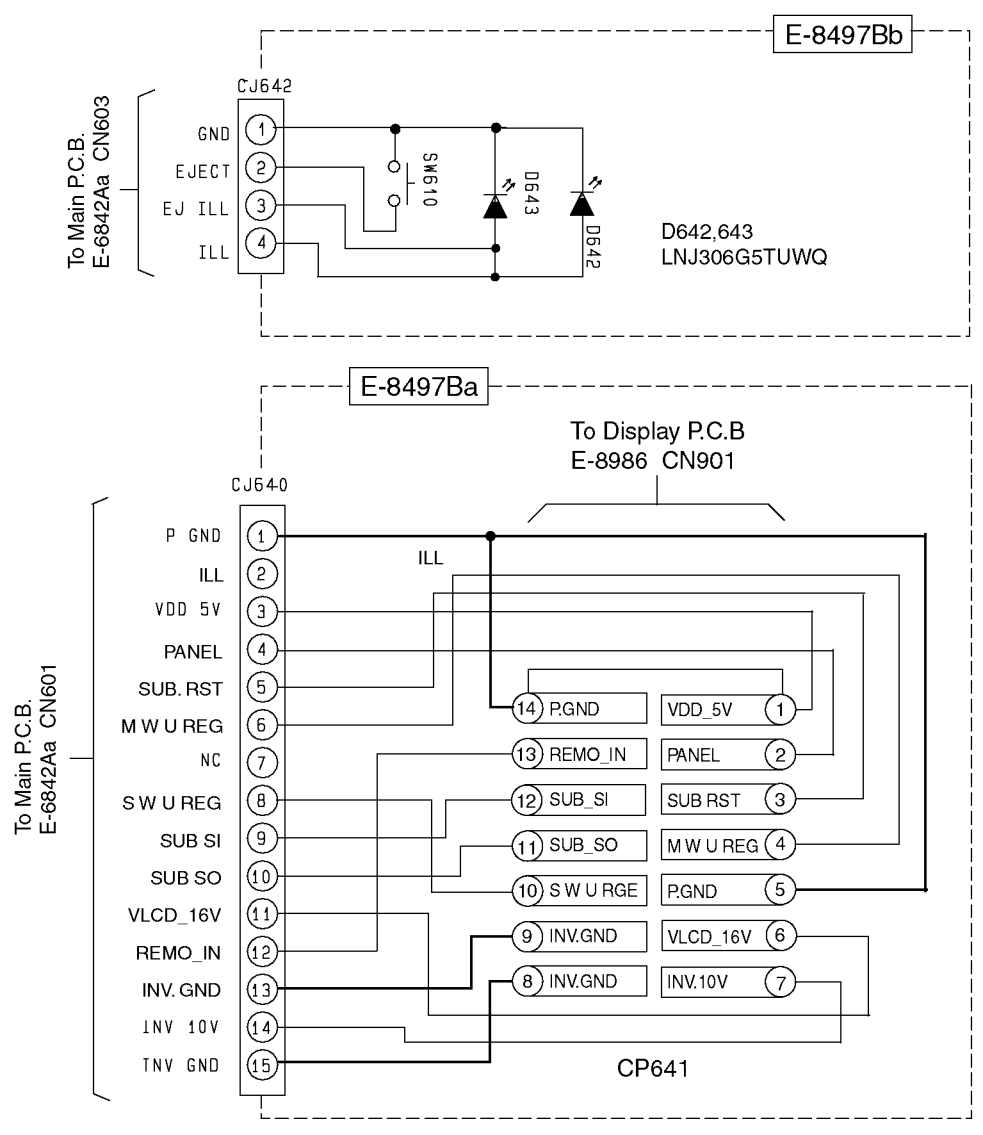
E-8497Bb
CJ642
To Main P.C.B.
E-6842Aa CN603
GND
EJECT
EJ ILL
ILL
SW610
D643
D642
D642,643
LNJ306G5TUWQ
E-8497Ba
To Display P.C.B
E-8986 CN901
CJ640
To Main P.C.B.
E-6842Aa CN601
P GND
ILL
VDD 5V
PANEL
SUB. RST
M W U REG
NC
S W U REG
SUB SI
SUB SO
VLCD_16V
REMO_IN
INV. GND
INV 10V
INV GND
P.GND
REMO_IN
SUB_SI
SUB_SO
S W U RGE
INV.GND
INV.GND
VDD_5V
PANEL
SUB RST
M W U REG
P.GND
VLCD_16V
INV.10V
CP641

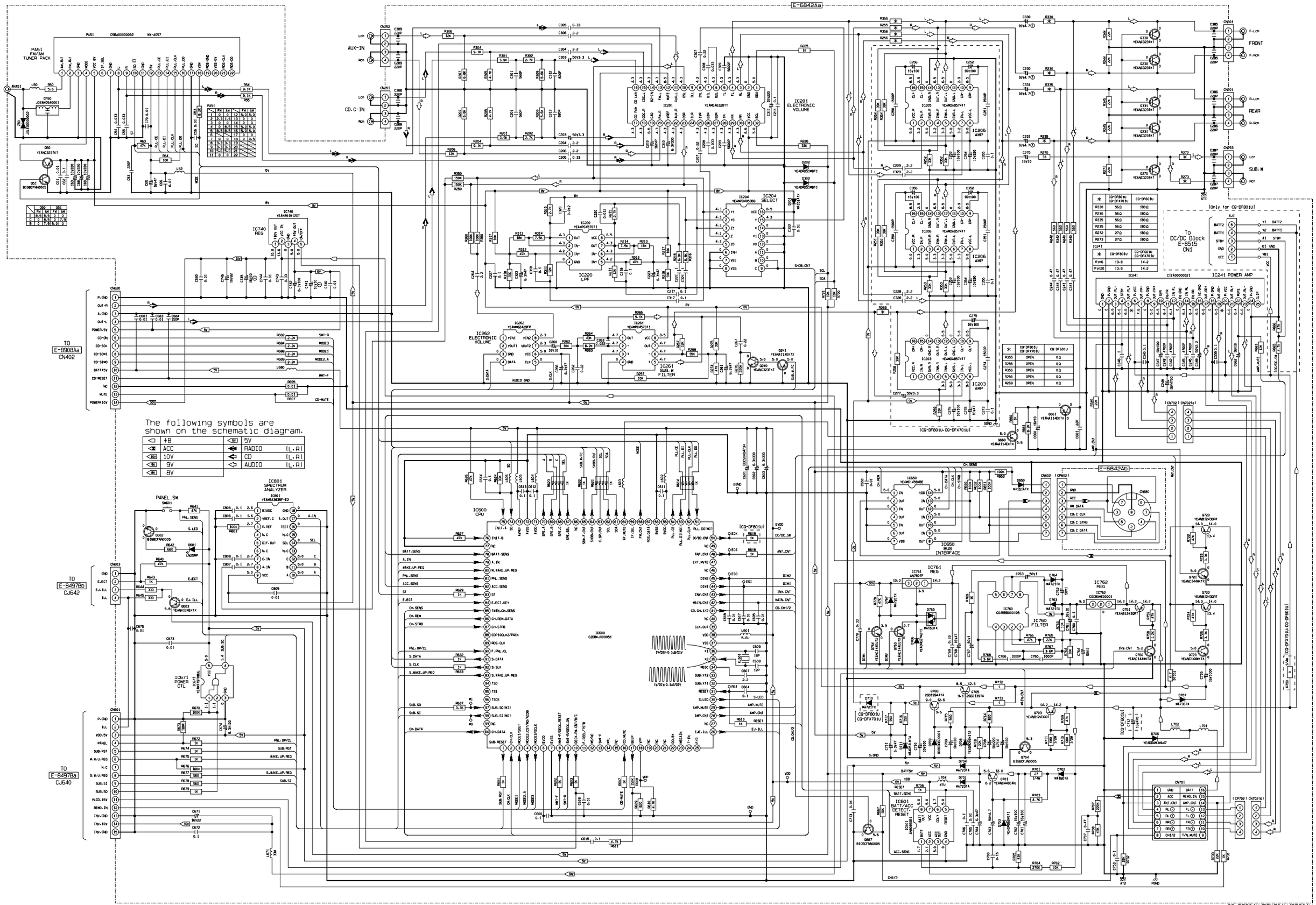

CQ-DF801U/DFX701U/DF601U

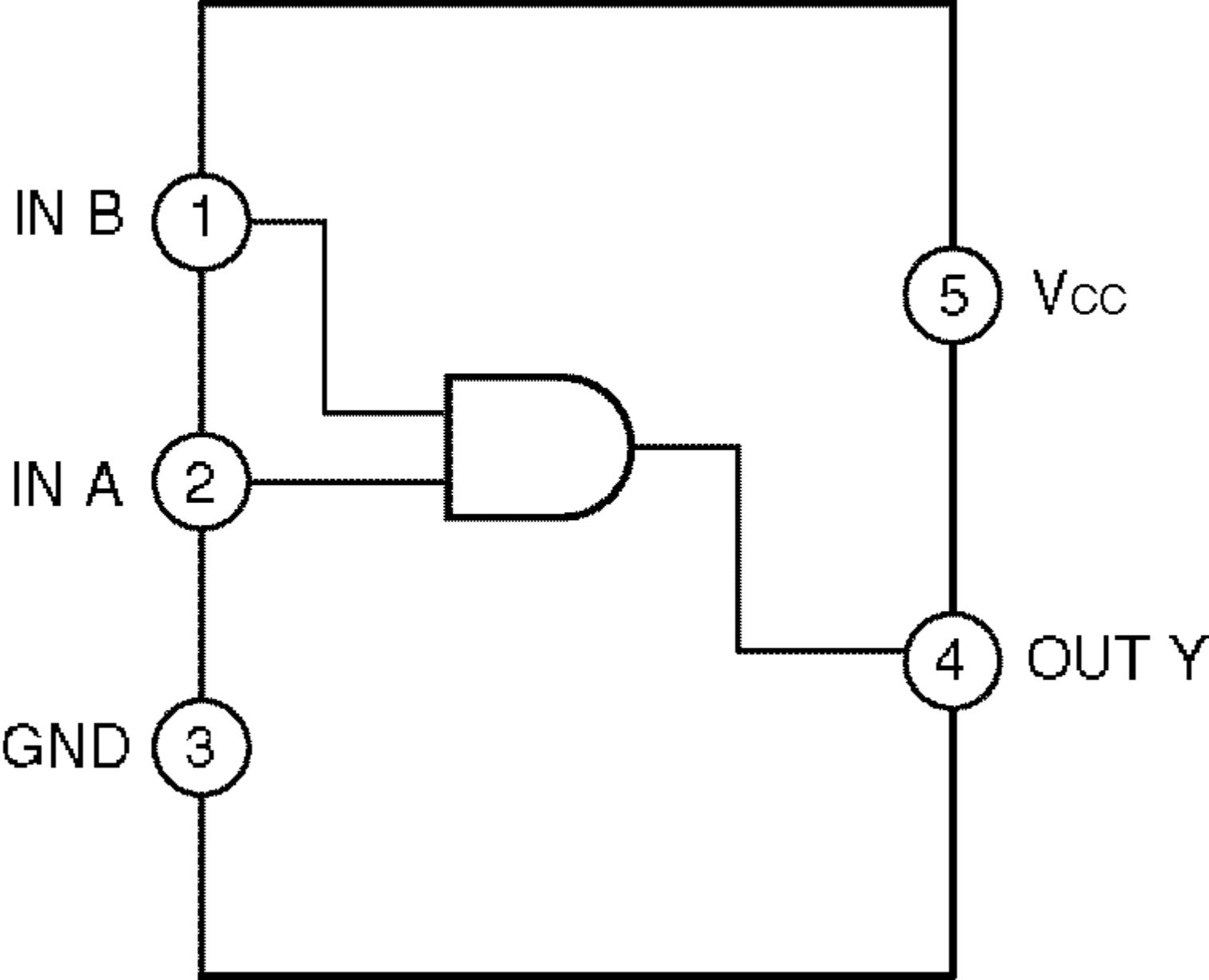
IN B
1
IN A
2
GND
3
5
VCC
4
OUT Y

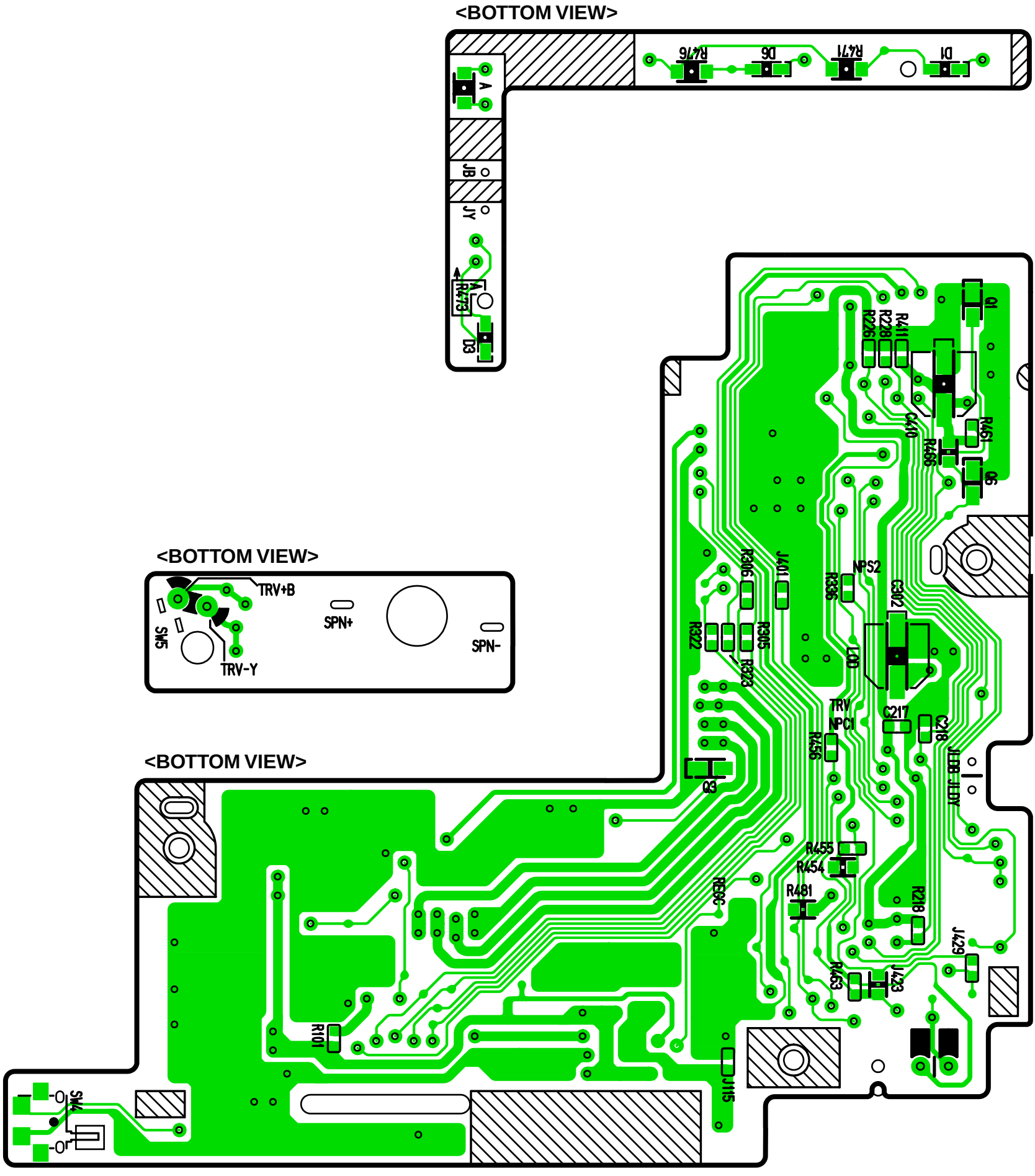
<BOTTOM VIEW>
D1
R471
D6
R476
A
JB
JY
R473
D3
Q1
R411
R228
R226
C410
R451
R466
Q6
J401
R306
R336
NPS2
C302
R305
R322
R323
LDO
TRV
NPC1
C217
C218
R456
LEB
HEDY
Q3
R455
R454
R481
R218
J429
R463
J423
R101
J115
SW4
<BOTTOM VIEW>
TRV+B
SW5
SPN+
SPN-
TRV-Y
<BOTTOM VIEW>

[E-8908Ab]

<TOP VIEW>

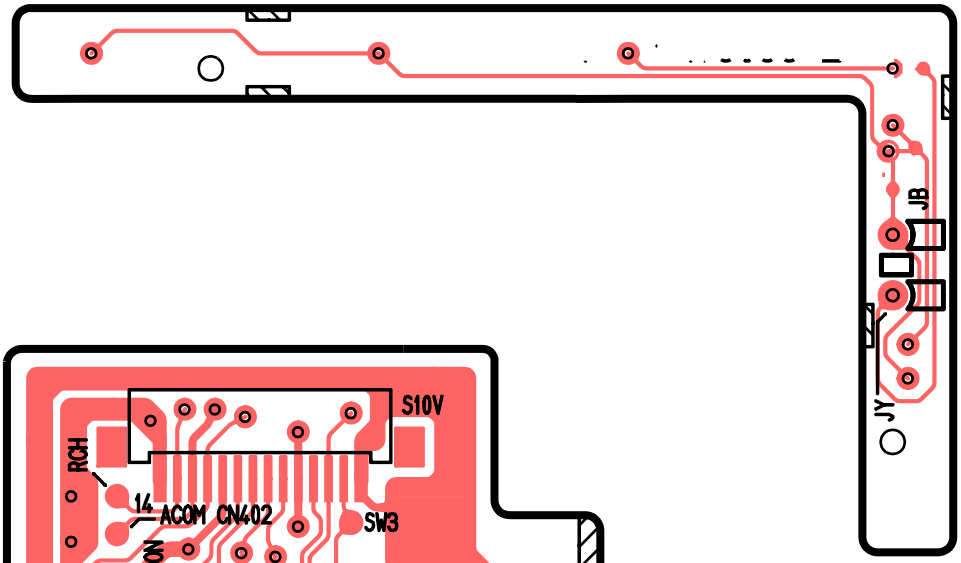

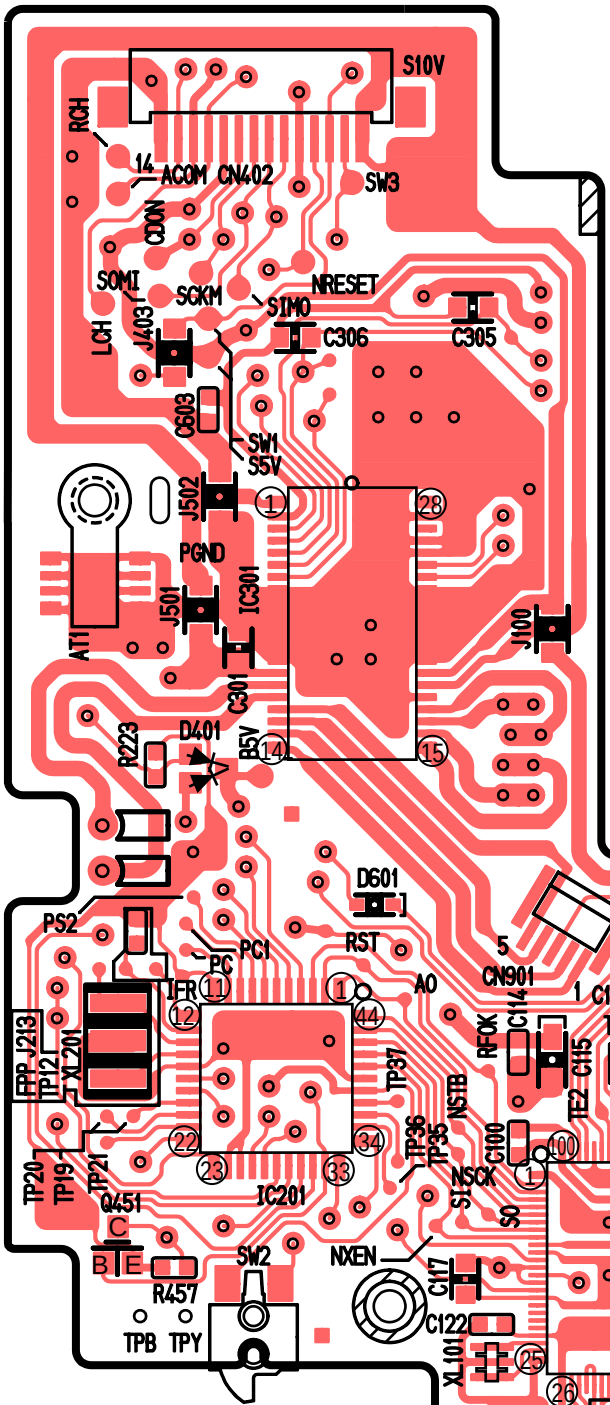

[E-8908Ac]

<TOP VIEW>

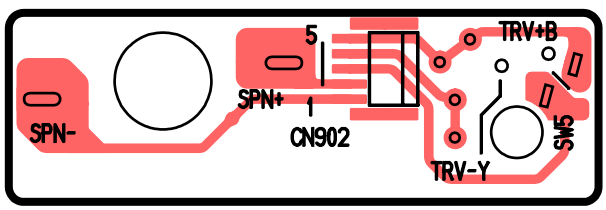

[E-8908Aa]

<TOP VIEW>

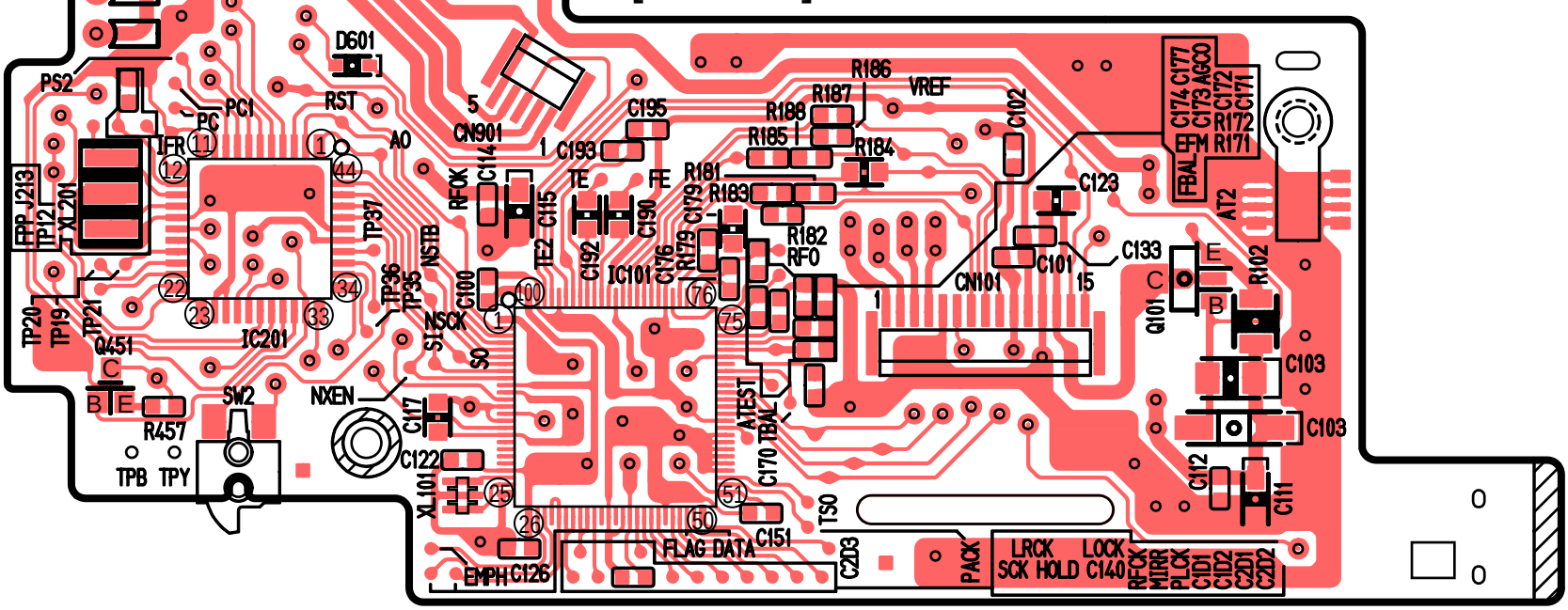

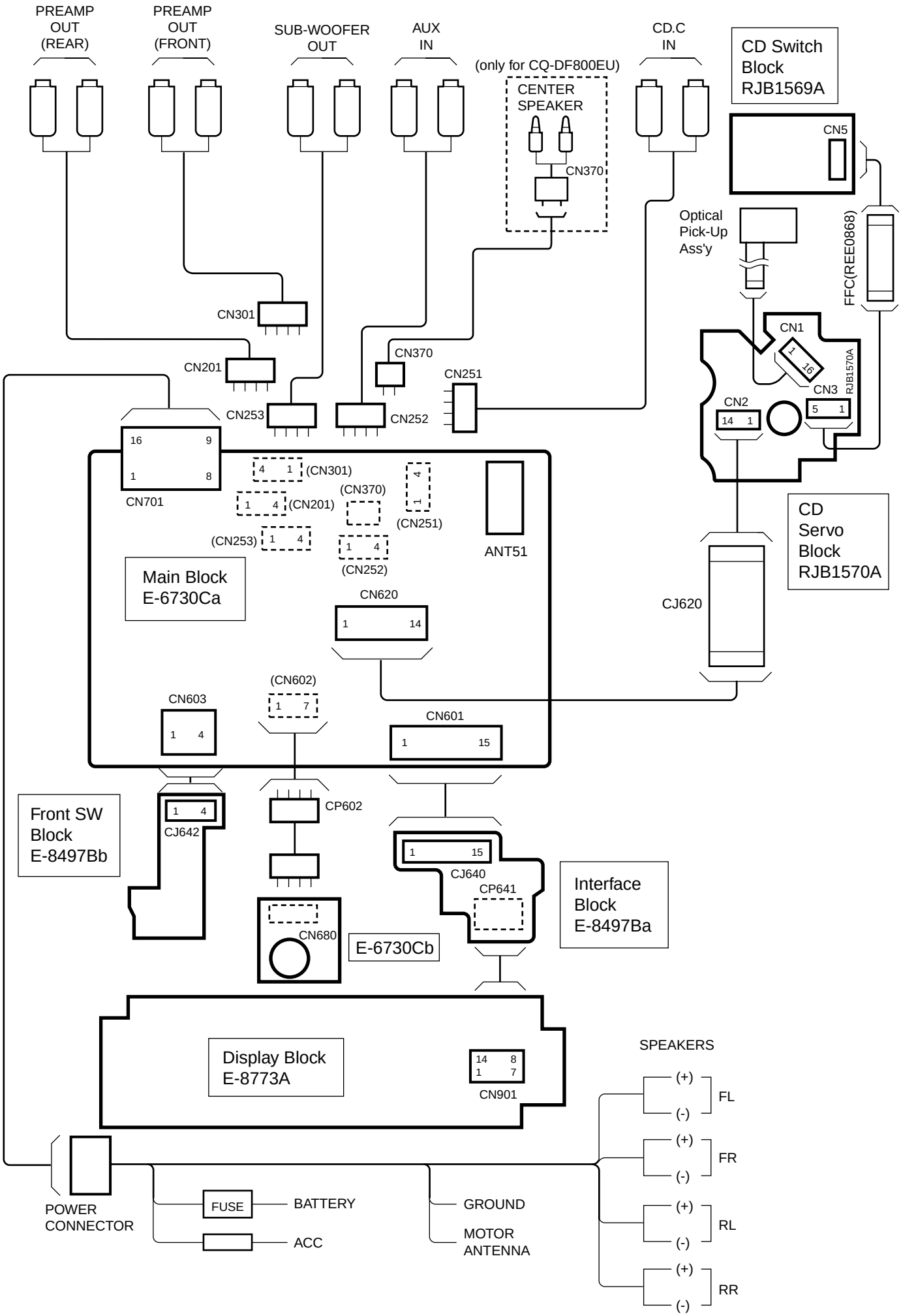
PREAMP OUT (REAR)
PREAMP OUT (FRONT)
SUB-WOOFER OUT
AUX IN
(only for CQ-DF800EU)
CENTER SPEAKER
CN370
CD.C IN
CD Switch Block RJB1569A
CN5
Optical Pick-Up Ass'y
FFC(REE0868)
CN301
CN201
CN370
CN251
CN253
CN252
CN1
CN3
CN2
RJB1570A
CN701
(CN301)
(CN370)
(CN201)
(CN251)
(CN253)
(CN252)
ANT51
Main Block E-6730Ca
CD Servo Block RJB1570A
CJ620
CN620
(CN602)
CN603
CN601
Front SW Block E-8497Bb
CJ642
CP602
CJ640
CP641
Interface Block E-8497Ba
CN680
E-6730Cb
Display Block E-8773A
CN901
SPEAKERS
FL
FR
RL
RR
POWER CONNECTOR
FUSE
BATTERY
ACC
GROUND
MOTOR ANTENNA

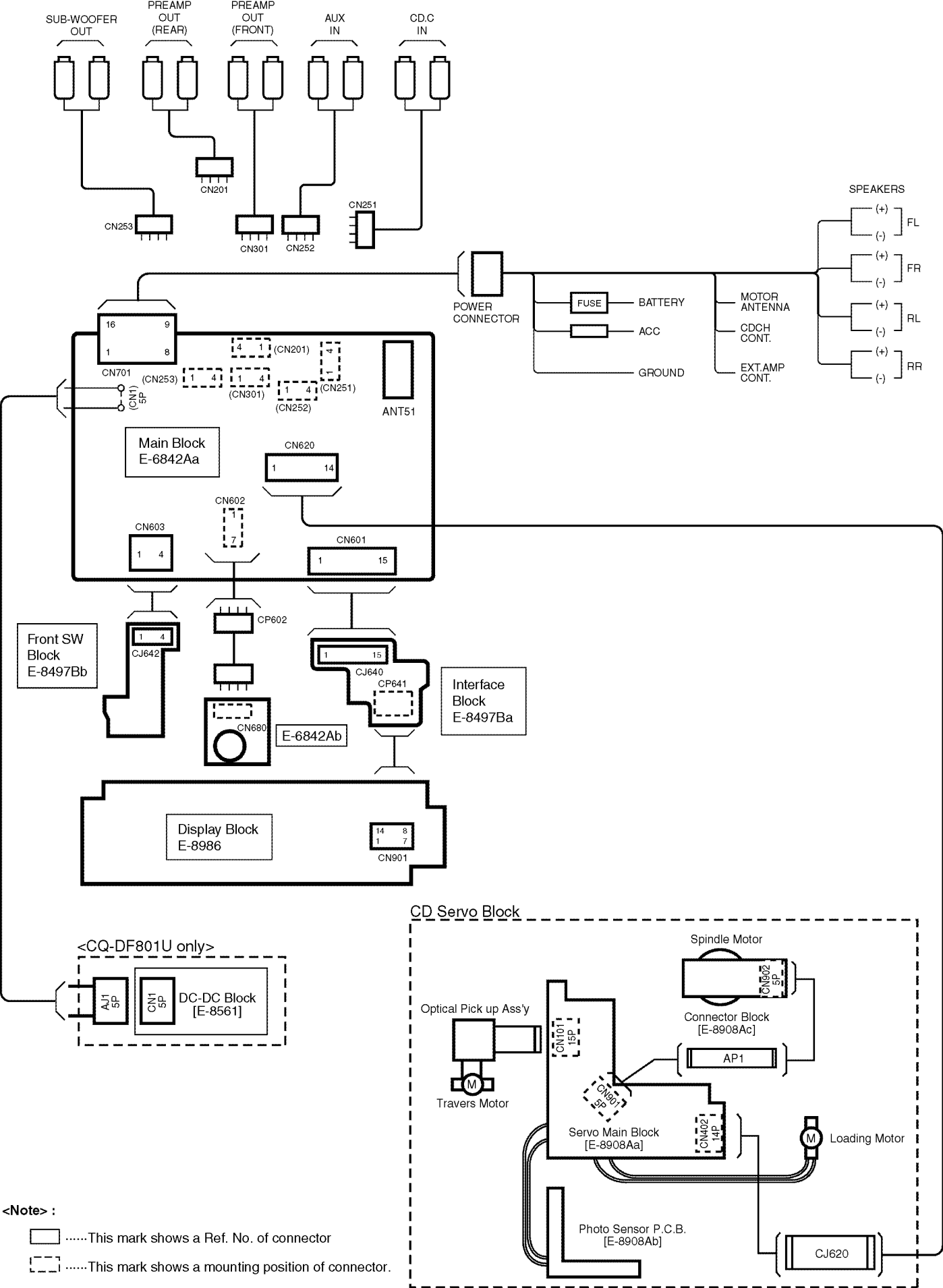

<Note> :

▭ ·····This mark shows a Ref. No. of connector

▭ ·····This mark shows a mounting position of connector.

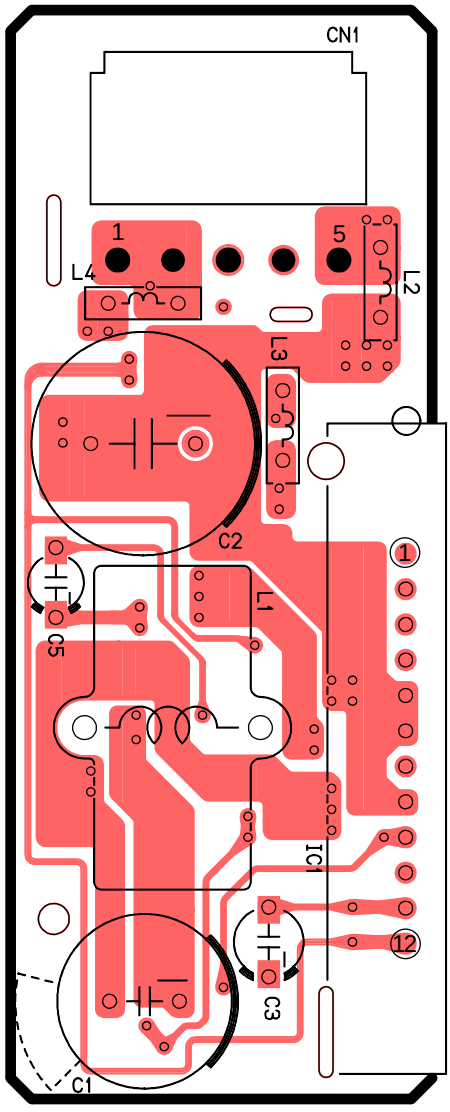

[E-8515][Top View]

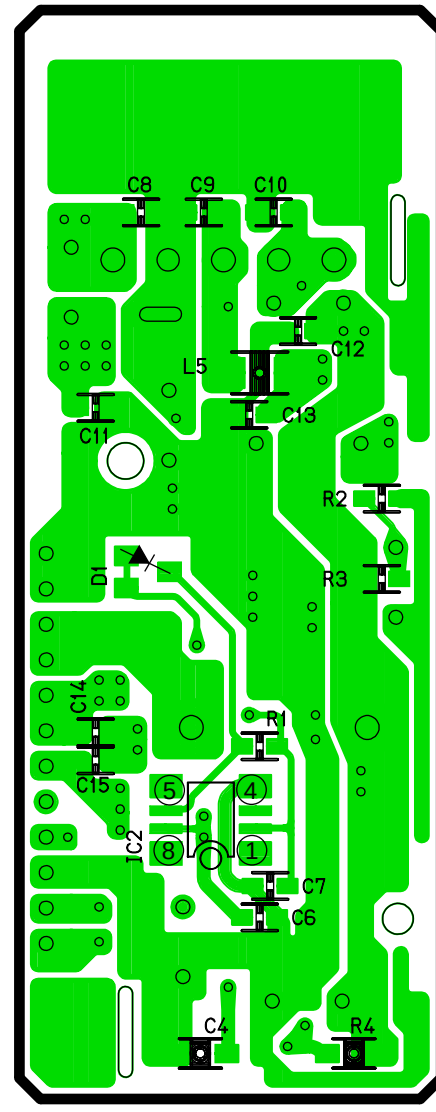

[E-8515][Bottom View]

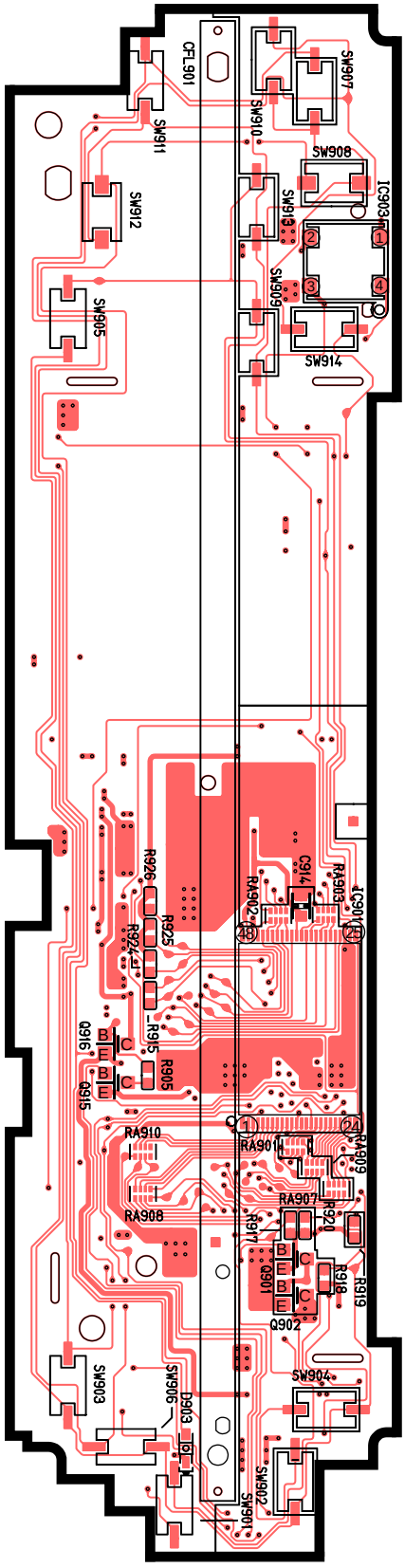

[E-8986][Top View]

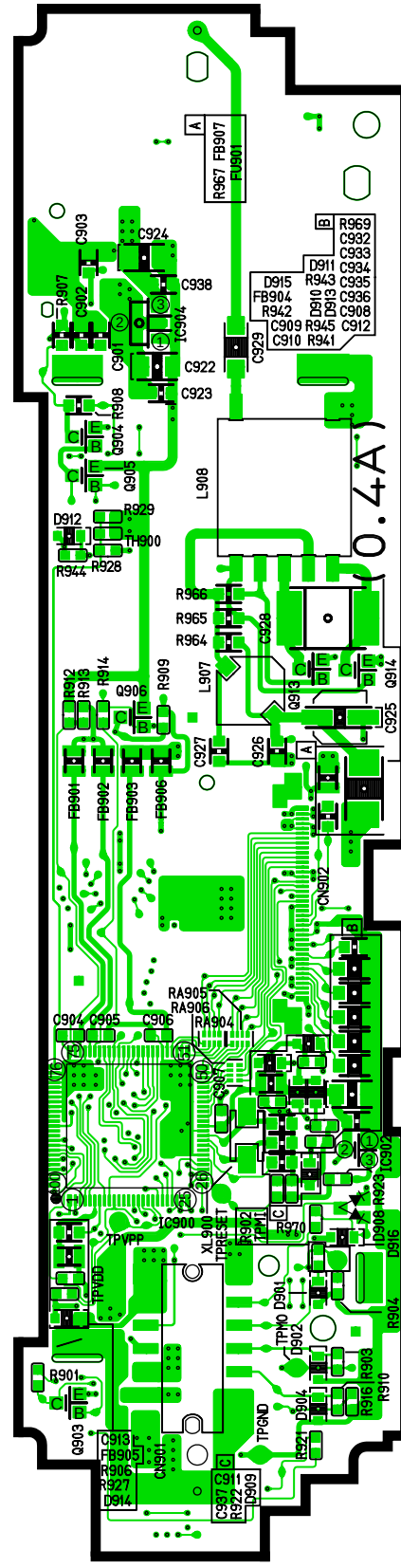

[E-8986][Bottom View]

[E-8497Bb]

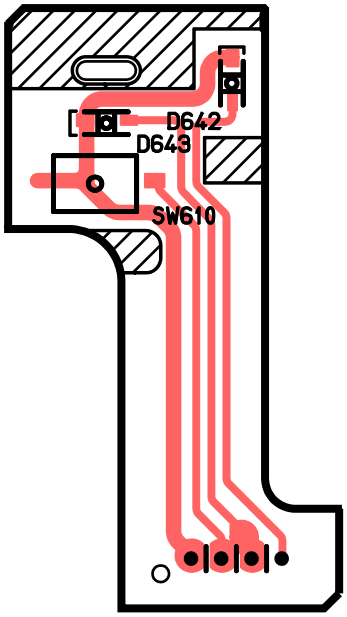

<TOP VIEW>

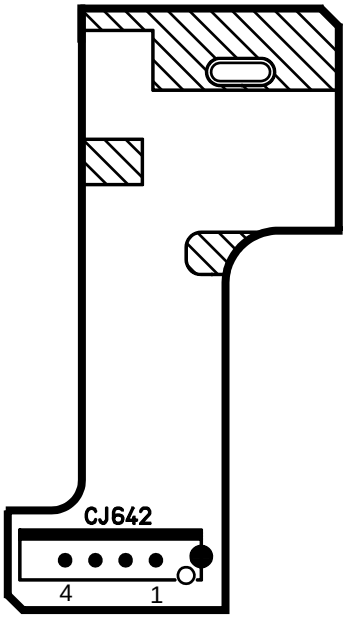

<BOTTOM VIEW>

[E-8497Ba]

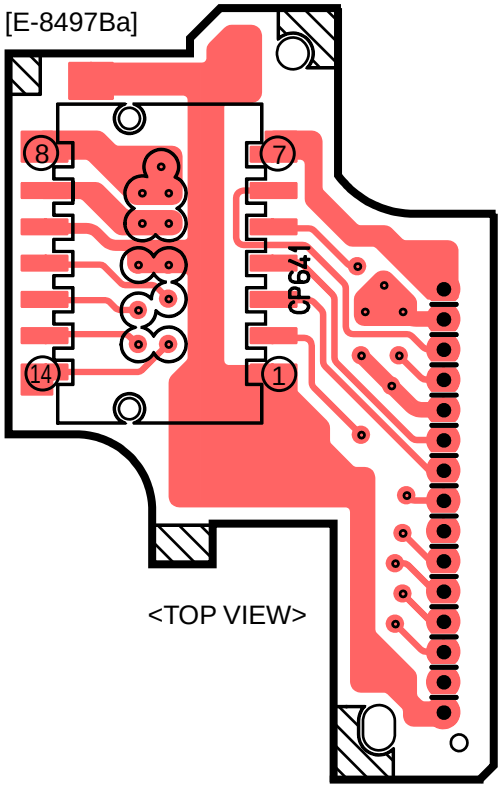

<TOP VIEW>

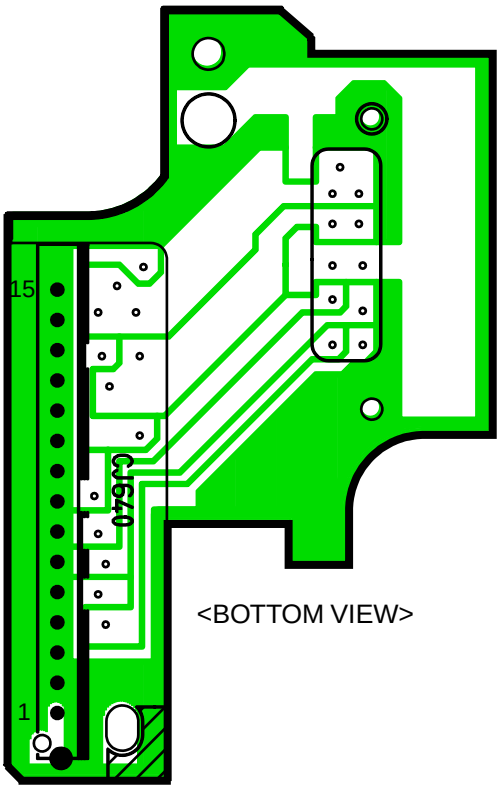

<BOTTOM VIEW>

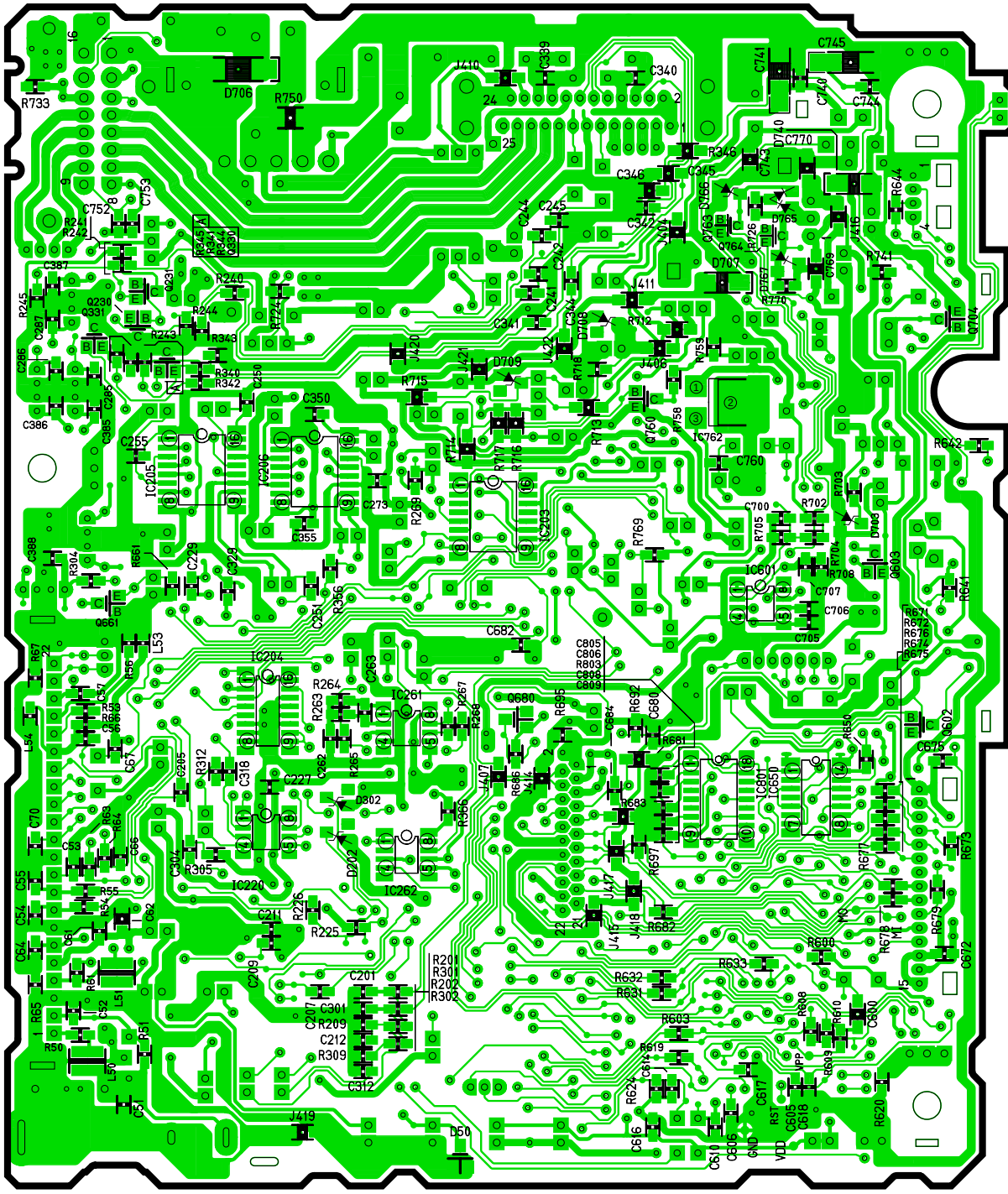

[E-6842Aa][Bottom View]

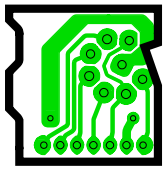

[E-6842Ab]
[Bottom View]

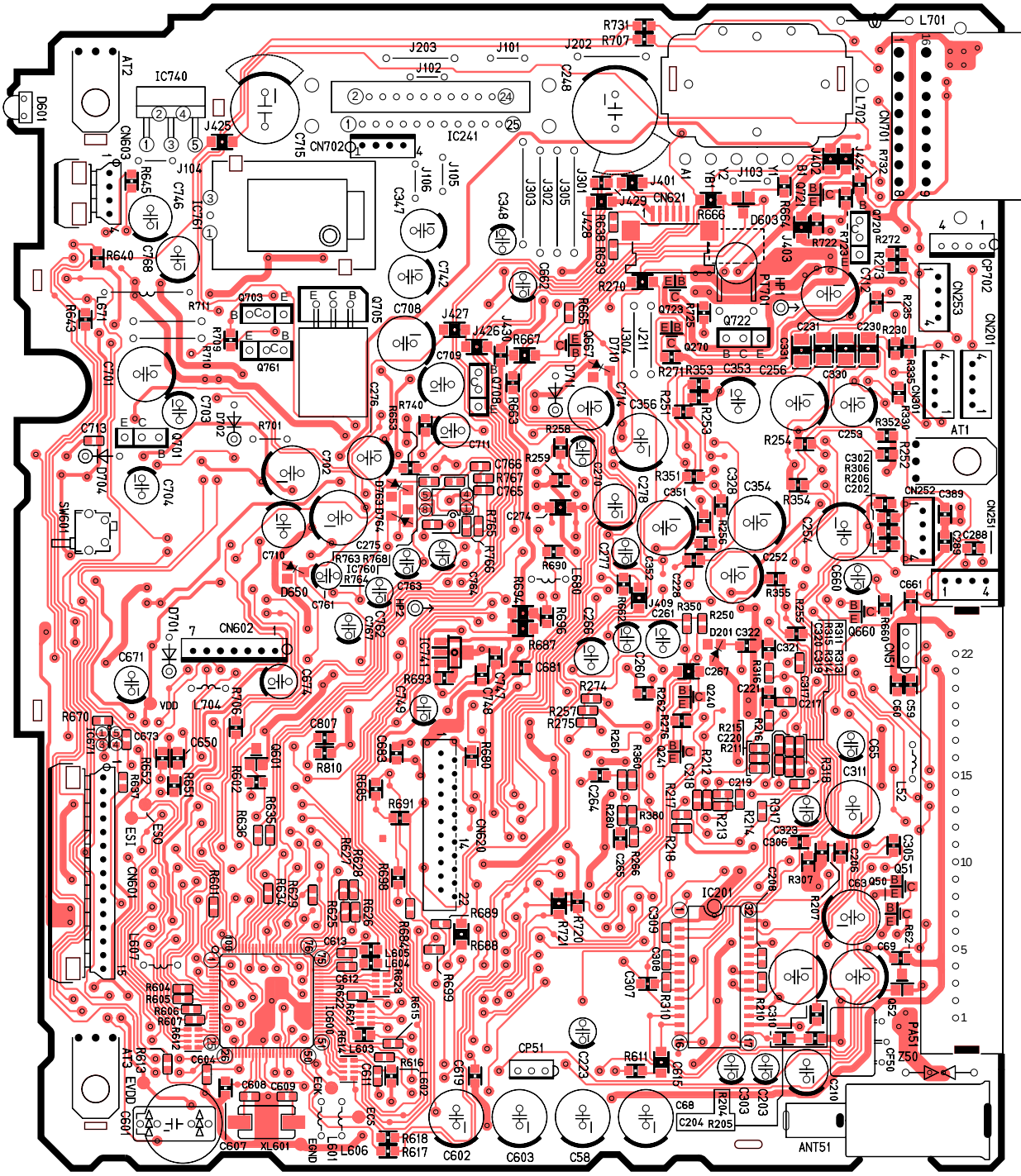
L701
R731
R707
J203
J202
J101
J102
C248
IC740
AT2
D601
CN603
J425
C715
CN702
IC241
L702
CN701
R732
J104
R645
C746
IC761
J106
J105
J301
J302
J303
J305
J401
CN621
J429
J428
R638
R639
C347
C348
R666
D603
J402
J403
Q721
Q720
R722
R729
R272
R273
C712
CP702
CN253
CN201
R640
C788
R643
L671
R711
Q703
Q705
C708
J427
J426
J430
R667
R663
Q708
C709
Q761
R709
R710
C701
C702
C703
D702
R701
C713
D704
C704
SW601
C710
R740
C276
R653
D763
R764
C275
R763
R768
IC760
R764
C761
D650
C762
C763
HP2
C764
R765
R766
C766
R767
C765
C711
R690
L680
R694
R696
C682
C681
R687
C683
C747
C748
C749
IC741
R693
C674
CN602
D701
C671
VDD
L704
R705
R670
C673
C650
R652
R651
R637
E51
E50
CN601
R601
R602
R635
R636
C807
R810
R685
R691
R689
R688
R699
R698
R628
R627
R626
R625
C613
C612
R622
R621
L603
L604
L605
R624
R623
R615
R616
L602
R614
R612
R613
C604
C608
C609
ECK
EDS
EGND
L601
L606
R618
R617
C607
XL601
C602
C603
C58
CP51
C223
R611
C615
C619
C68
C204
R205
R204
C203
C303
C210
ANT51
Z50
PA51
CP50
C52
R310
C310
R210
C309
C308
C307
R720
R721
IC201
R207
R307
C208
C296
C305
Q51
Q50
C62
C69
L52
C311
C65
C59
C60
CN51
Q660
C661
C660
R660
R311
R313
R315
R314
C320
C319
C321
R316
C322
D201
R250
R350
C261
C409
C352
C228
R355
R255
R354
C252
C254
C354
C326
R256
R351
C351
C278
C277
C270
C274
R259
R258
C356
R251
R253
R353
C353
C256
C330
C331
R254
C259
C302
R306
R206
C202
R352
R252
R330
R335
CN301
CN252
C389
CN251
C288
AT1
R235
R230
R271
J211
J304
D710
D711
Q723
R725
Q270
Q722
R270
HP1
P701
Y1
Y2
YB1
A1
B1
Q721
Q720
R729
R722