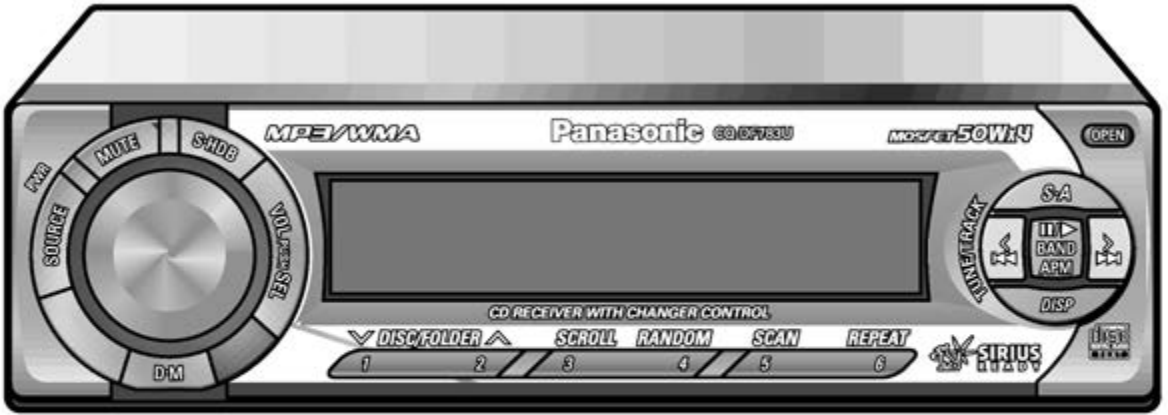
MP3/WMA
Panasonic CQ-DF783U
MOSFET 50W×4
OPEN
PWR
MUTE
S/HDB
SOURCE
VOL PUSH SET
DM
S-A
TUNE/TRACK
BAND
APM
DISP
CD RECEIVER WITH CHANGER CONTROL
DISC/FOLDER
SCROLL
RANDOM
SCAN
REPEAT
1
2
3
4
5
6
SIRIUS READY

# (CQ-DF783U)

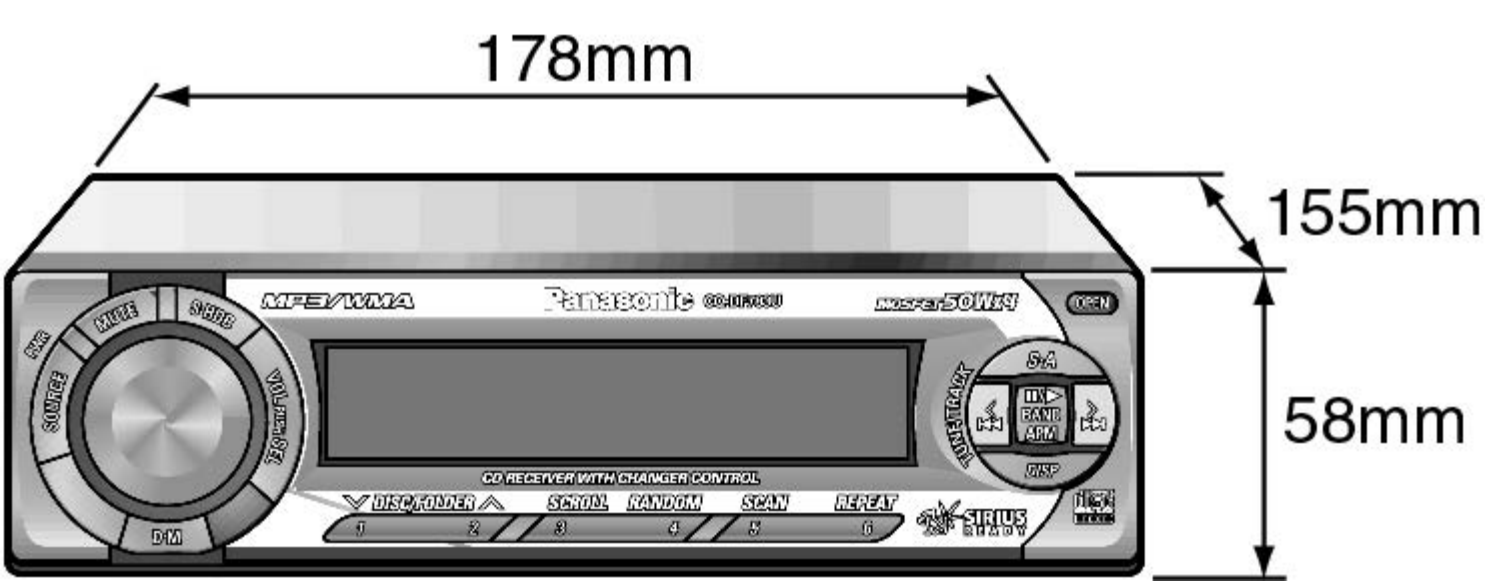
178mm
155mm
58mm
MP3/WMA
Panasonic
MOSFET 50W x 4
OPEN
PWR
MUTE
SOURCE
VOLUME
DIM
5-A
TUNE/TRACK
BAND
APM
DISP
CD RECEIVER WITH CHANGER CONTROL
DISC/FOLDER
SCROLL
RANDOM
SCAN
REPEAT
1
2
3
4
5
6
SIRIUS
READY

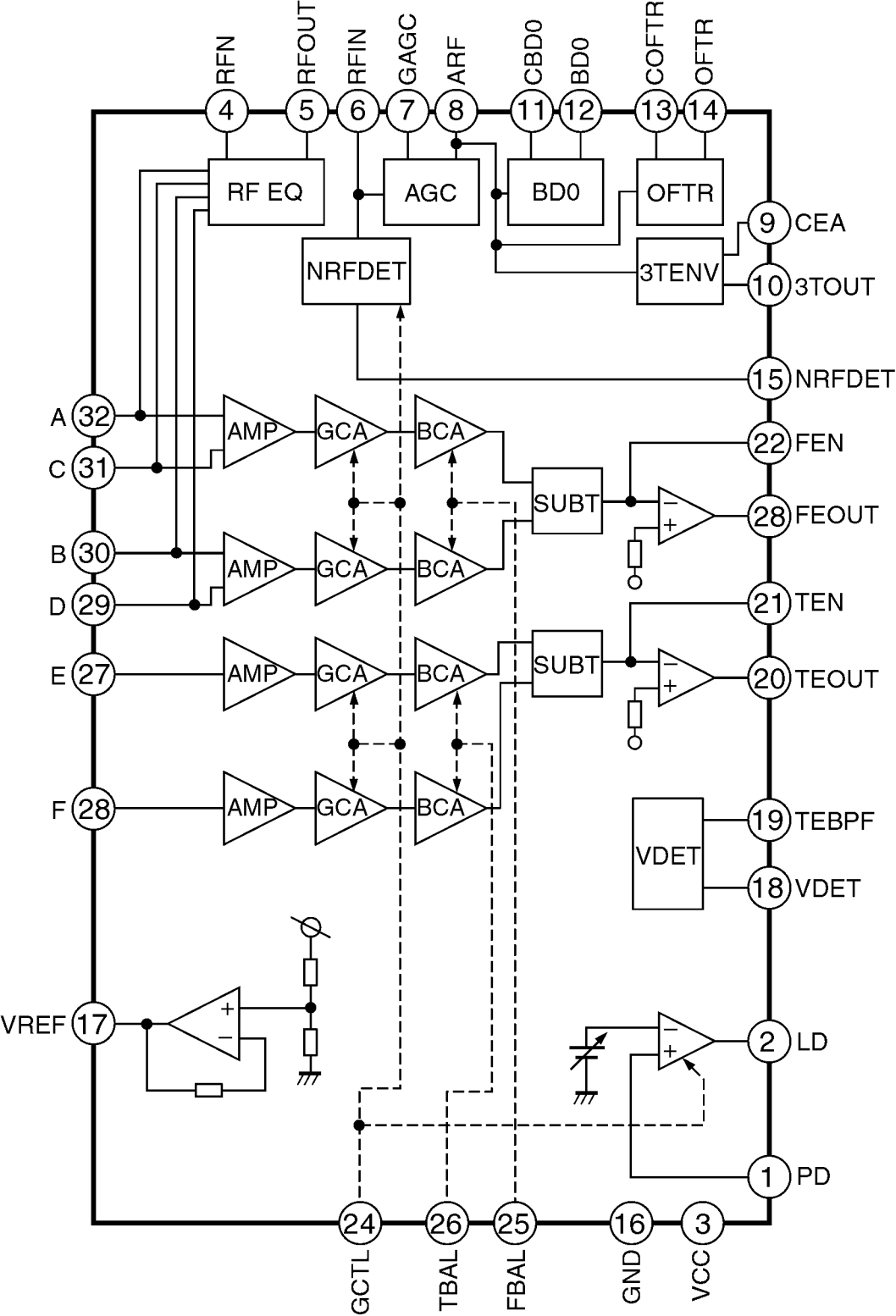
RFN
RFOUT
RFIN
GAGC
ARF
CBD0
BD0
COFTR
OFTR
4
5
6
7
8
11
12
13
14
RF EQ
AGC
BD0
OFTR
NRFDET
3TENV
9 CEA
10 3TOUT
15 NRFDET
A 32
C 31
B 30
D 29
E 27
F 28
AMP
GCA
BCA
SUBT
22 FEN
28 FEOUT
21 TEN
20 TEOUT
VDET
19 TEBPF
18 VDET
VREF 17
2 LD
1 PD
24 GCTL
26 TBAL
25 FBAL
16 GND
3 VCC

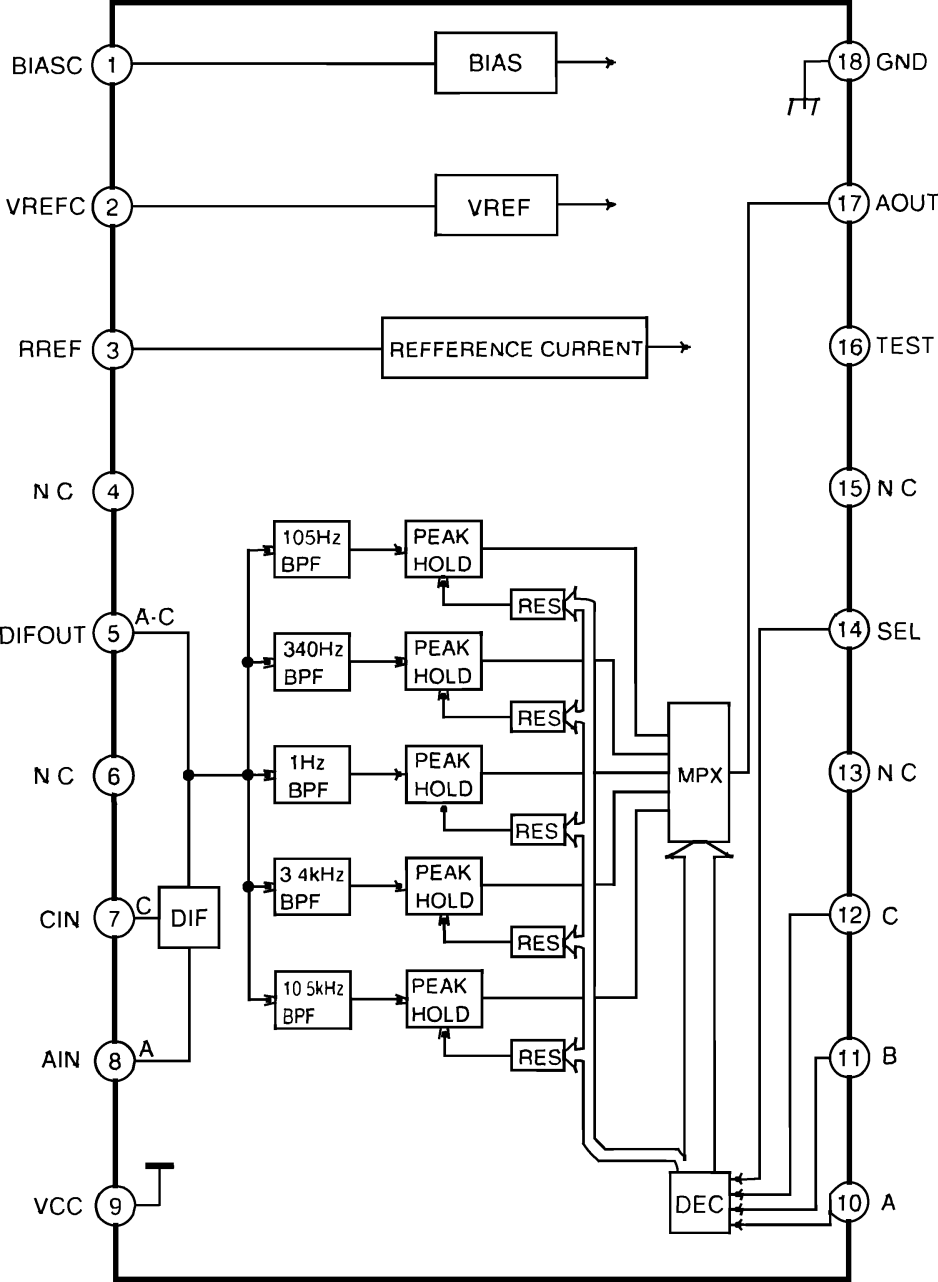
BIASC
1
BIAS
18
GND
VREFC
2
VREF
17
AOUT
RREF
3
REFFERENCE CURRENT
16
TEST
N C
4
15
N C
105Hz
BPF
PEAK
HOLD
RES
DIFOUT
5
A-C
340Hz
BPF
PEAK
HOLD
RES
14
SEL
N C
6
1Hz
BPF
PEAK
HOLD
RES
MPX
13
N C
3 4kHz
BPF
PEAK
HOLD
RES
CIN
7
C
DIF
12
C
10 5kHz
BPF
PEAK
HOLD
RES
AIN
8
A
11
B
VCC
9
DEC
10
A

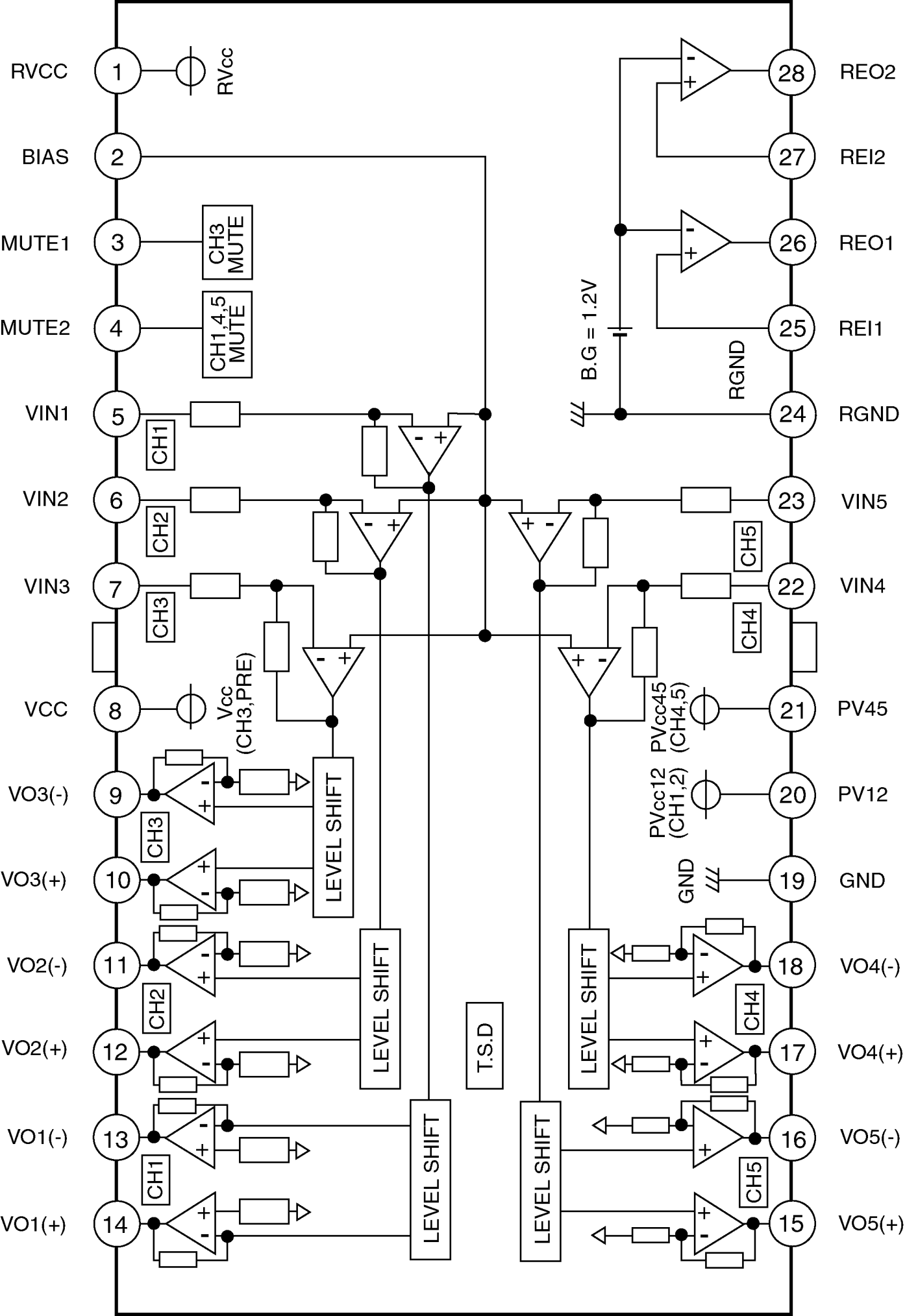
RVCC
1
RVcc
BIAS
2
MUTE1
3
CH3 MUTE
MUTE2
4
CH1,4,5 MUTE
VIN1
5
CH1
VIN2
6
CH2
VIN3
7
CH3
VCC
8
Vcc (CH3,PRE)
VO3(-)
9
CH3
VO3(+)
10
LEVEL SHIFT
VO2(-)
11
CH2
VO2(+)
12
LEVEL SHIFT
VO1(-)
13
CH1
VO1(+)
14
LEVEL SHIFT
T.S.D
LEVEL SHIFT
LEVEL SHIFT
B.G = 1.2V
RGND
28
REO2
27
REI2
26
REO1
25
REI1
24
RGND
23
VIN5
CH5
22
VIN4
CH4
21
PV45
PVcc45 (CH4,5)
20
PV12
PVcc12 (CH1,2)
19
GND
GND
18
VO4(-)
CH4
17
VO4(+)
16
VO5(-)
CH5
15
VO5(+)

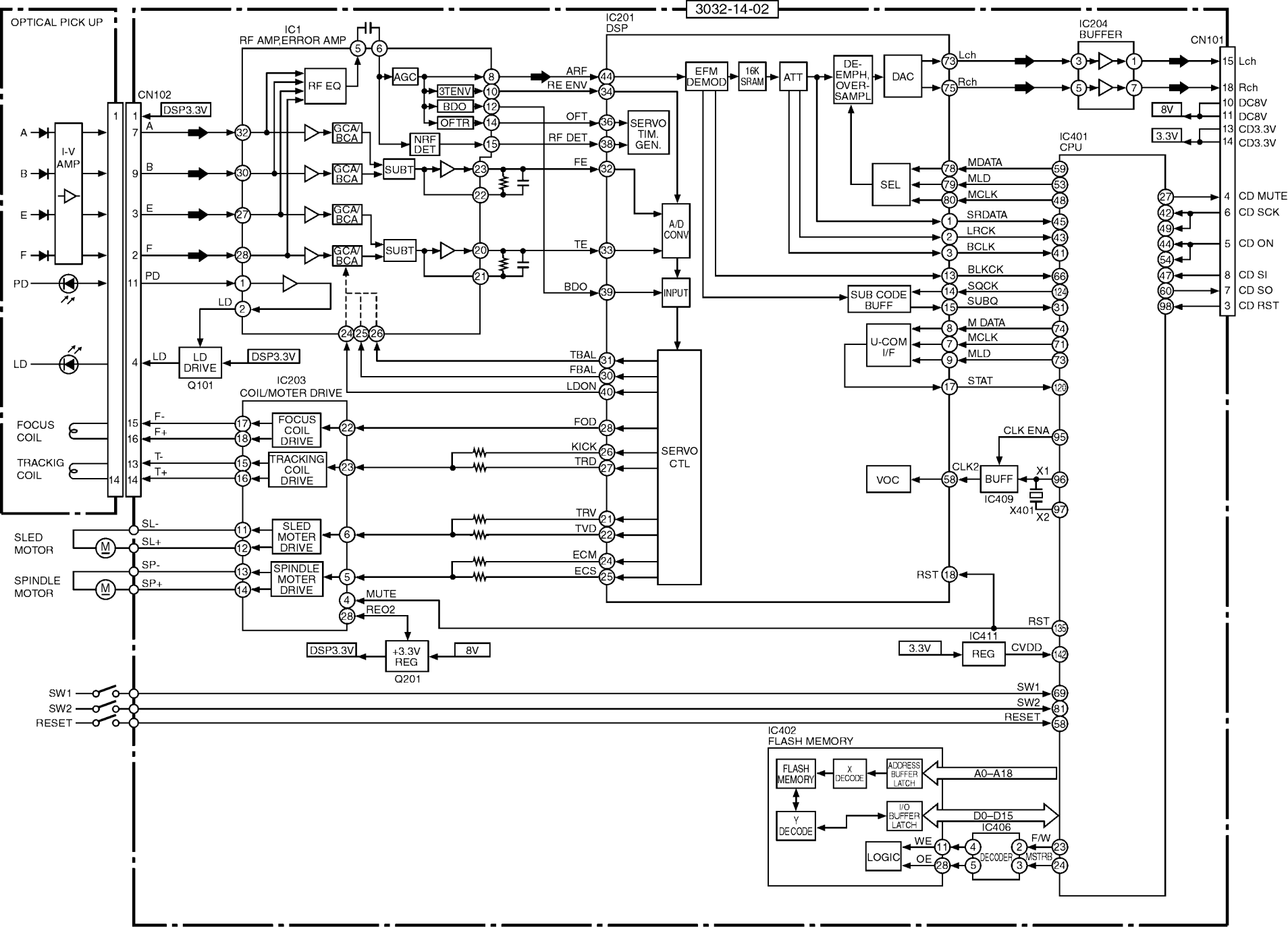
OPTICAL PICK UP
I-V AMP
A
B
E
F
PD
LD
FOCUS COIL
TRACKIG COIL
SLED MOTOR
SPINDLE MOTOR
SW1
SW2
RESET
CN102
DSP3.3V
IC1
RF AMP,ERROR AMP
RF EQ
AGC
3TENV
BDO
OFTR
NRF DET
GCA/BCA
SUBT
LD DRIVE
Q101
IC203
COIL/MOTER DRIVE
FOCUS COIL DRIVE
TRACKING COIL DRIVE
SLED MOTER DRIVE
SPINDLE MOTER DRIVE
MUTE
REQ2
+3.3V REG
Q201
8V
IC201
DSP
ARF
RE ENV
OFT
RF DET
FE
TE
BDO
SERVO TIM. GEN.
A/D CONV
INPUT
SERVO CTL
TBAL
FBAL
LDON
FOD
KICK
TRD
TRV
TVD
ECM
ECS
EFM DEMOD
16K SRAM
ATT
DE-EMPH, OVER-SAMPL
DAC
Lch
Rch
IC204
BUFFER
CN101
IC401
CPU
SEL
MDATA
MLD
MCLK
SRDATA
LRCK
BCLK
BLKCK
SQCK
SUBQ
SUB CODE BUFF
M DATA
U-COM I/F
STAT
CLK ENA
VOC
CLK2
BUFF
IC409
X401
X1
X2
RST
IC411
REG
CVDD
3.3V
CD MUTE
CD SCK
CD ON
CD SI
CD SO
CD RST
IC402
FLASH MEMORY
FLASH MEMORY
X DECODE
ADDRESS BUFFER LATCH
A0–A18
Y DECODE
I/O BUFFER LATCH
D0–D15
IC406
LOGIC
WE
OE
DECODER
F/W
VSTRB

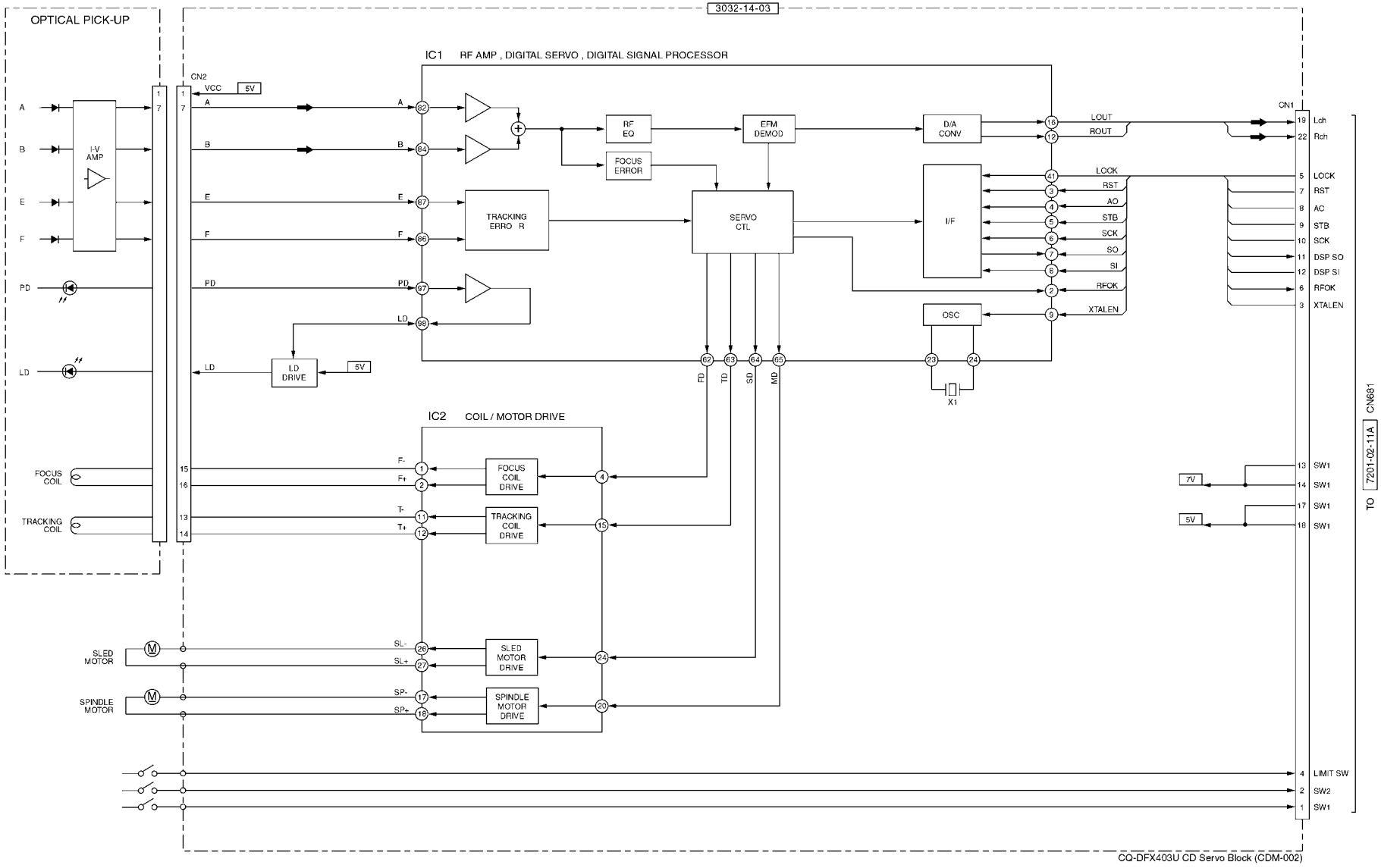
3032-14-03
OPTICAL PICK-UP
A
B
E
F
PD
LD
I-V AMP
CN2
VCC
5V
IC1 RF AMP , DIGITAL SERVO , DIGITAL SIGNAL PROCESSOR
RF EQ
EFM DEMOD
D/A CONV
FOCUS ERROR
TRACKING ERRO R
SERVO CTL
I/F
OSC
X1
LD DRIVE
LOUT
ROUT
LOCK
RST
AO
STB
SCK
SO
SI
RFOK
XTALEN
FD
TD
SD
MD
CN1
Lch
Rch
DSP SO
DSP SI
IC2 COIL / MOTOR DRIVE
FOCUS COIL
TRACKING COIL
FOCUS COIL DRIVE
TRACKING COIL DRIVE
SLED MOTOR
SPINDLE MOTOR
SLED MOTOR DRIVE
SPINDLE MOTOR DRIVE
7V
SW1
SW2
LIMIT SW
TO 7201-02-11A CN681
CQ-DFX403U CD Servo Block (CDM-002)

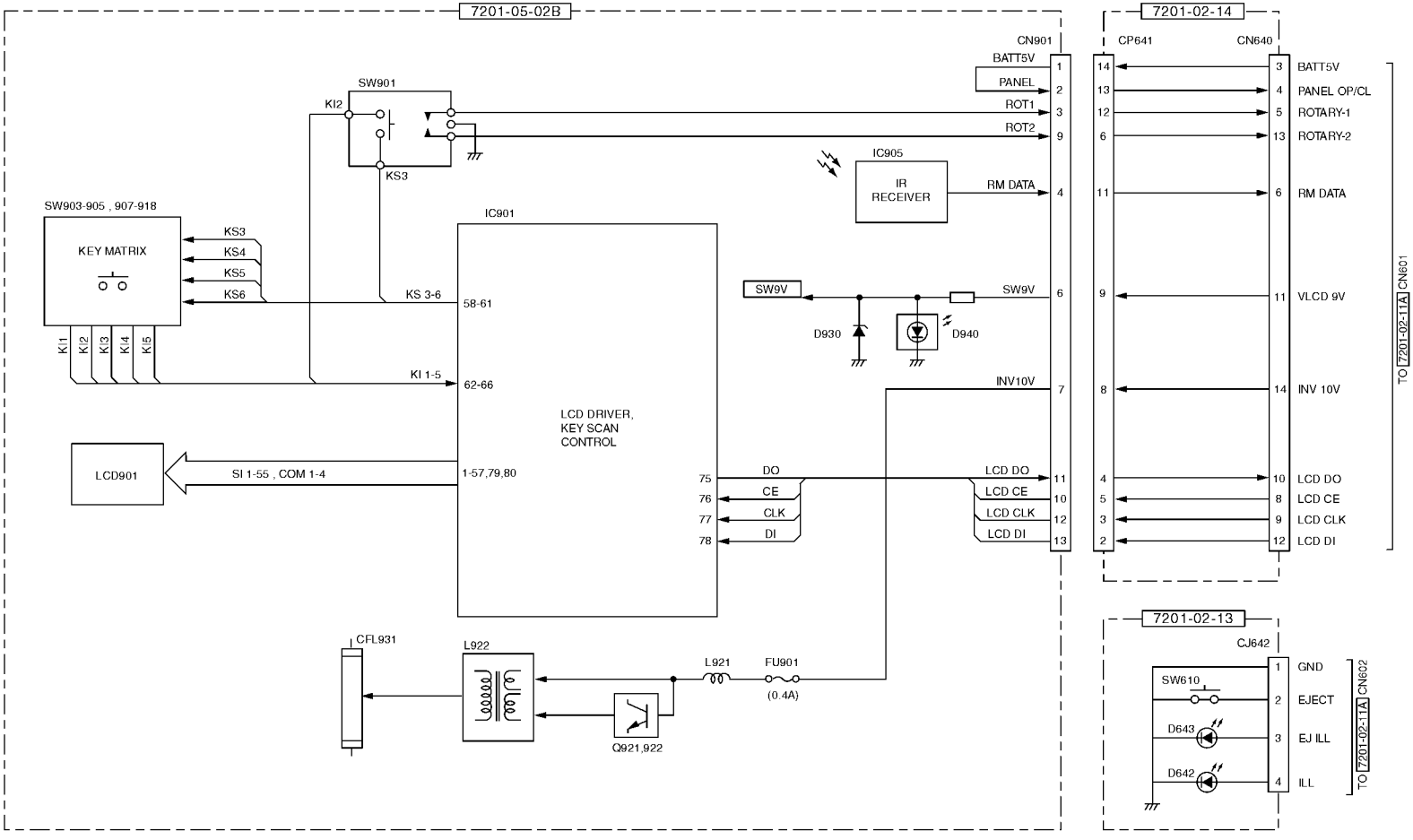


CQ-DF783U/DFX403U Display / Connector / Eject Block

7201-02-11A

PA51 FM/AM TUNER PACK
ANT
ANT51
L51
AM ANT
FM ANT
BPF50
AM RF AMP
FM RF AMP
AM IN
FM IN
RF AGC
Lch Out
Rch Out
FM DET Out
Lch
Rch
RADIO
8V
Q55
MODE SW
AM/FM
FM/AM OSC
IF OUT
SD/ST
VSM
FM ST/MONO
TUNER CONTROL

IC201
IC201 AUDIO SELECT TONE CONTROL
AC OUT L
AC OUT R
AC IN L
AC IN R
RADIO L
RADIO R
CDC L
CDC R
CD L
CD R
BEEP
INPUT MUTLPLEXER
GAIN/AUTOZERO
MIX
MIXING STAGE
LOUDNESS
VOLUME
SOFT MUTE
TREBLE
BASS
ZERO CROSS
MONO FADER
FL
FR
RL
RR
SWL
SWR
BEEP
DIGITAL CONTROL PC-BUS
I²C
SCL
SDA

IC271
POWER AMP
Q362
Q262
Q366
Q266
Q346
CN701
FL(+)
FL(-)
FR(+)
FR(-)
RL(+)
RL(-)
RR(+)
RR(-)
AMP SW
ANT SW
CH 1/2
ACC
BATT

IC231
LINE AMP
AF MUTE
Q660.661
MUTE DRIVE
AMP MUTE
AMP CNT

J1
F. Lch
F. Rch
R. Lch
R. Rch
PRE OUT
SUB WOOFER
SUB WOOFER
CN253

IC401
IC401 PLL
REFERENCE DIVIDER
XL401
PHASE DETECTOR CHARGE PUMP
Q411
LPF
SWALLOW COUNTER
FM OSC
C²B I/F
DATA SHIFT REGISTER LATCH
UNIVERSAL COUNTER
FM IF
CE
DI
CLK
DO
MONO
AM/FM
Q52,54
MONO SW
FM ST/MONO
PLL CONTROL

CN251
CDC IN
CDC.L
CDC.R

IC801
IC801 SPECTRUM ANALIZER
DIF
105Hz BPF
340Hz BPF
1Hz BPF
34kHz BPF
105kHz BPF
PEAK HOLD
MPX
A OUT
DECODE
SEL
C
B
A

CN681
CDL
CDR
5V
5V
8V
8V
DSP SO
DSP SI
CD STB
CD SCK
CD RST
CD A0
LOCK
RFOK
CD OSC STP
LIMIT
SW1
SW2
TO [2022-14-03] CN1
CD CONTROL

IC783
+5V REG
D713
IC781
+9V REG
Q781,782
POWER SW
BATT 12V
CD CNT

IC702
RESET
I²C
AF MUTE
BZ OUT
TUNER CONTROL
PLL CONTROL
CD CONTROL
DISPLY CONTROL
CD CNT
IC601
CPU
MAIN CNT
AMP MUTE
ANT CNT
AMP CNT
X1
XL601
X2
XT1
XL602
XT2
A
B
C
SEL
BATT
ACC
RESET

IC701
BATT DET
ACC
BATT 5V
VDD 5V
Q701,D703
+5V REG
D702
BATT
10V
VCC 5V
D709
+5V REG
Q709,D711
Q708,D714
+10V REG
D707
Q703,704
POWER SW
MAIN CNT
8V
Q705,D708
+8V REG
LPF 9V
D719
IC719
+9V REG
BATT 12V

CN1601
INV 10V
VLCD 9V
VDD 5V
PANEL OP/CL
ROTARY 1
REMO DATA
LCD CE
LCD CLK
LCD DO
LCD DI
ROTARY 2
TO [7201-02-13] CJ642
TO CN640
BATT5V
DISPLAY CONTROL

IC761
+10V REG
Q760,761
INV SW
BATT
INV CNT
IC670
LCD 5V SW
BATT5V
LCD 5V CNT
DIM1
DIM2
D765
D766
Q763
Q764

Q644
EJ ILL SW
EJ ILL
Q645,646
ILL SW
ILL CNT
D601
Q642
S.LED
SW601
PANEL SW
BATT 5V

CN602
EJECT
EJ ILL
ILL
TO [7201-02-14] CN640
EJECT
EJ ILL
ILL CNT
S. LED
PANEL SW
CHANGER CONTROL

Q667
CHANGER SELECT
CH 1/2
Q720,721
AMP SW
AMP CNT
Q722,723
ANT SW
ANT CNT
+B ON

7201-02-12A
CN661
(CP661)
CN680
ACC
SENS
CH. REM
CLK
STRB
DATA
D650
IC650

CQ-DFX403U Main Block
Printed in Japan 2003.1(K) (Recycled Paper)

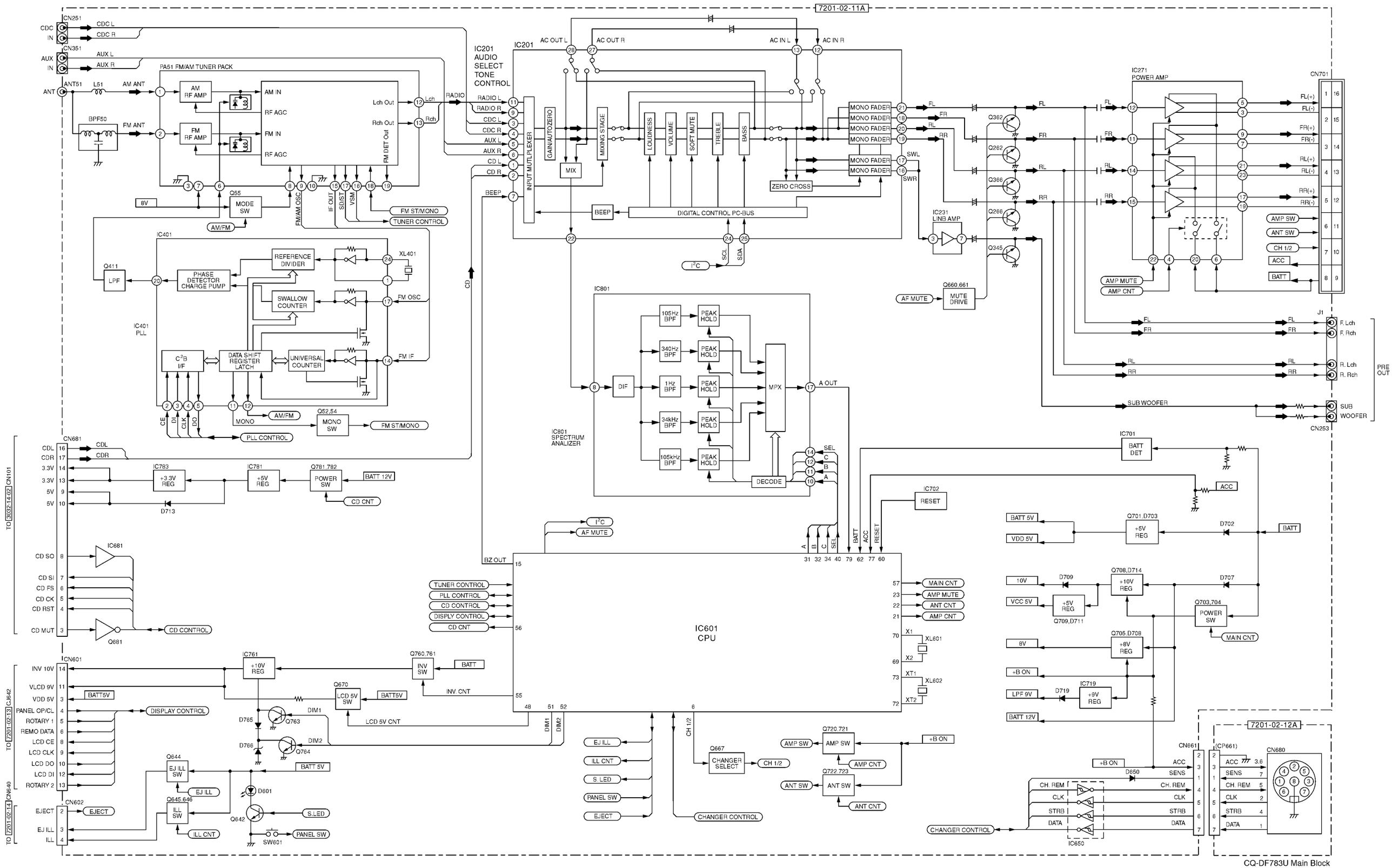
7201-02-11A
CDC IN
CN251
CDC L
CDC R
AUX IN
CN351
AUX L
AUX R
ANT
ANT51
L51
AM ANT
FM ANT
BPF50
PA51 FM/AM TUNER PACK
AM RF AMP
FM RF AMP
AM IN
FM IN
RF AGC
Lch Out
Rch Out
FM DET Out
8V
Q55
MODE SW
AM/FM
FM/AM OSC
IF OUT
SD/ST
VSM
FM ST/MONO
TUNER CONTROL
IC201
IC201 AUDIO SELECT TONE CONTROL
AC OUT L
AC OUT R
AC IN L
AC IN R
RADIO
RADIO L
RADIO R
CDC L
CDC R
AUX L
AUX R
CD L
CD R
BEEP
INPUT MUTLPLEXER
GAIN/AUTOZERO
MIX
MIXING STAGE
LOUDNESS
VOLUME
SOFT MUTE
TREBLE
BASS
ZERO CROSS
MONO FADER
FL
FR
RL
RR
SWL
SWR
BEEP
DIGITAL CONTROL PC-BUS
I²C
SCL
SDA
IC231
LINE AMP
AF MUTE
Q660.661
MUTE DRIVE
IC271
POWER AMP
Q362
Q262
Q366
Q266
Q345
CN701
FL(+)
FL(-)
FR(+)
FR(-)
RL(+)
RL(-)
RR(+)
RR(-)
AMP SW
ANT SW
CH 1/2
ACC
BATT
AMP MUTE
AMP CNT
J1
F. Lch
F. Rch
R. Lch
R. Rch
PRE OUT
SUB WOOFER
CN253
IC401
IC401 PLL
REFERENCE DIVIDER
PHASE DETECTOR CHARGE PUMP
SWALLOW COUNTER
DATA SHIFT REGISTER LATCH
UNIVERSAL COUNTER
C²B I/F
LPF
Q411
XL401
FM OSC
FM IF
CE
DI
CLK
DO
MONO
Q52,54
MONO SW
PLL CONTROL
IC801
IC801 SPECTRUM ANALIZER
DIF
105Hz BPF
340Hz BPF
1Hz BPF
34kHz BPF
105kHz BPF
PEAK HOLD
MPX
A OUT
DECODE
SEL
C
B
A
CD
CN681
CDL
CDR
3.3V
5V
IC783
+3.3V REG
IC781
+5V REG
Q781,782
POWER SW
BATT 12V
CD CNT
D713
TO CN101 CD102-14-02
IC681
CD SO
CD SI
CD FS
CD CK
CD RST
CD MUT
Q681
CD CONTROL
CN601
INV 10V
VLCD 9V
VDD 5V
PANEL OP/CL
ROTARY 1
REMO DATA
LCD CE
LCD CLK
LCD DO
LCD DI
ROTARY 2
TO 7201-02-13 CJ642
TO 7201-02-14 CN640
IC761
+10V REG
Q760,761
INV SW
INV CNT
BATT
BATT5V
Q670
LCD 5V SW
LCD 5V CNT
DISPLAY CONTROL
DIM1
DIM2
D765
D766
Q763
Q764
CN602
EJECT
EJ ILL
ILL
Q644
EJ ILL SW
Q645,646
ILL SW
D601
Q642
S.LED
PANEL SW
SW601
ILL CNT
IC601
CPU
BZ OUT
TUNER CONTROL
PLL CONTROL
CD CONTROL
DISPLY CONTROL
CD CNT
MAIN CNT
AMP MUTE
ANT CNT
AMP CNT
X1
X2
XT1
XT2
XL601
XL602
I²C
AF MUTE
BATT
ACC
RESET
SEL
EJ ILL
ILL CNT
S.LED
PANEL SW
EJECT
CHANGER CONTROL
CH 1/2
Q667
CHANGER SELECT
Q720,721
AMP SW
Q722,723
ANT SW
+B ON
IC701
BATT DET
IC702
RESET
BATT 5V
VDD 5V
Q701,D703
+5V REG
D702
10V
VCC 5V
D709
Q709,D711
Q708,D714
+10V REG
D707
Q703,704
POWER SW
MAIN CNT
8V
Q705,D708
+8V REG
+B ON
LPF 9V
D719
IC719
+9V REG
BATT 12V
7201-02-12A
CN661
(CP661)
ACC
SENS
CH. REM
CLK
STRB
DATA
D650
IC650
CN680
CN253
SUB WOOFER
CQ-DF783U Main Block

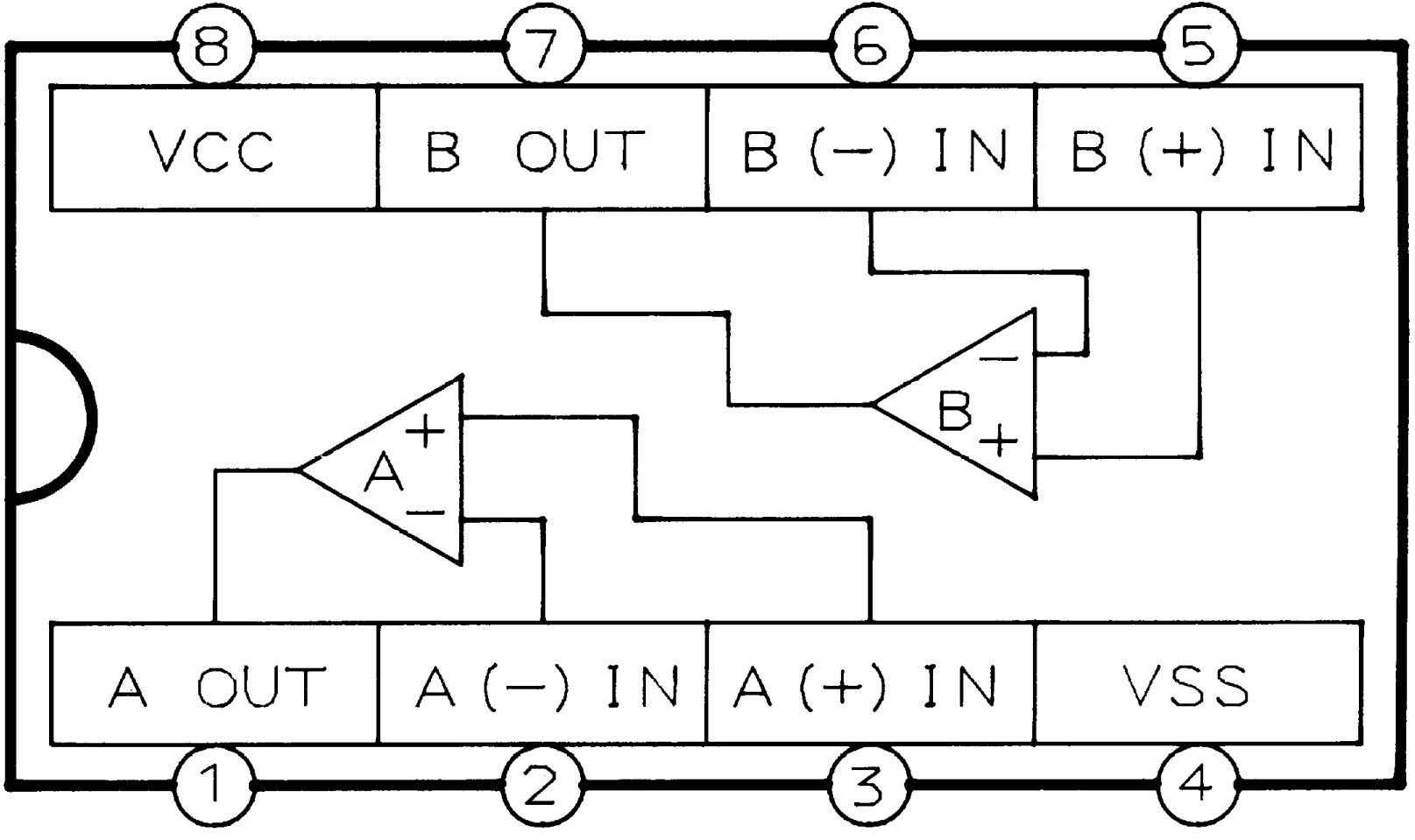
8
7
6
5
VCC
B OUT
B (−) IN
B (+) IN
B
A
A OUT
A (−) IN
A (+) IN
VSS
1
2
3
4

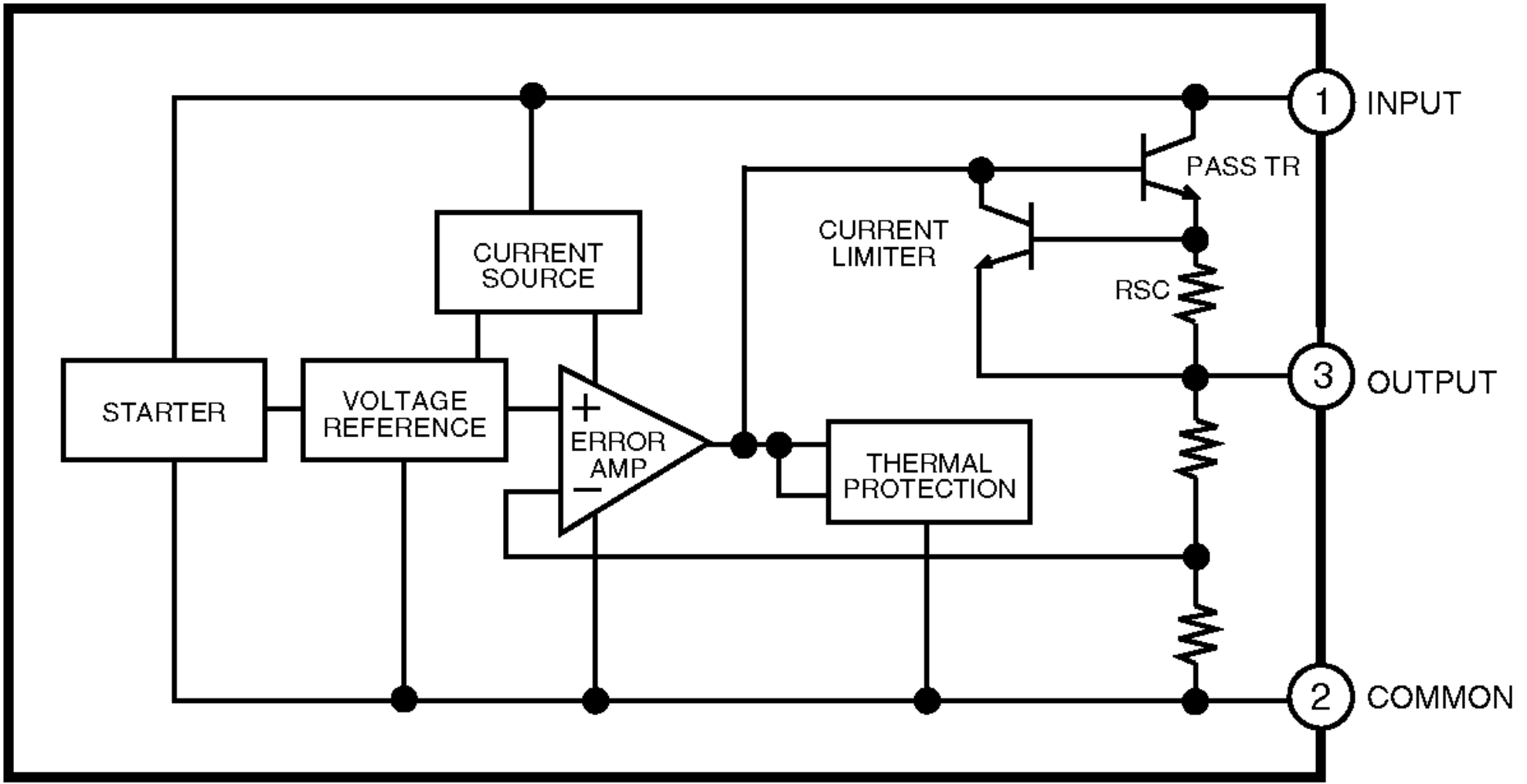
1
INPUT
PASS TR
CURRENT
LIMITER
CURRENT
SOURCE
RSC
3
OUTPUT
STARTER
VOLTAGE
REFERENCE
+
ERROR
AMP
−
THERMAL
PROTECTION
2
COMMON

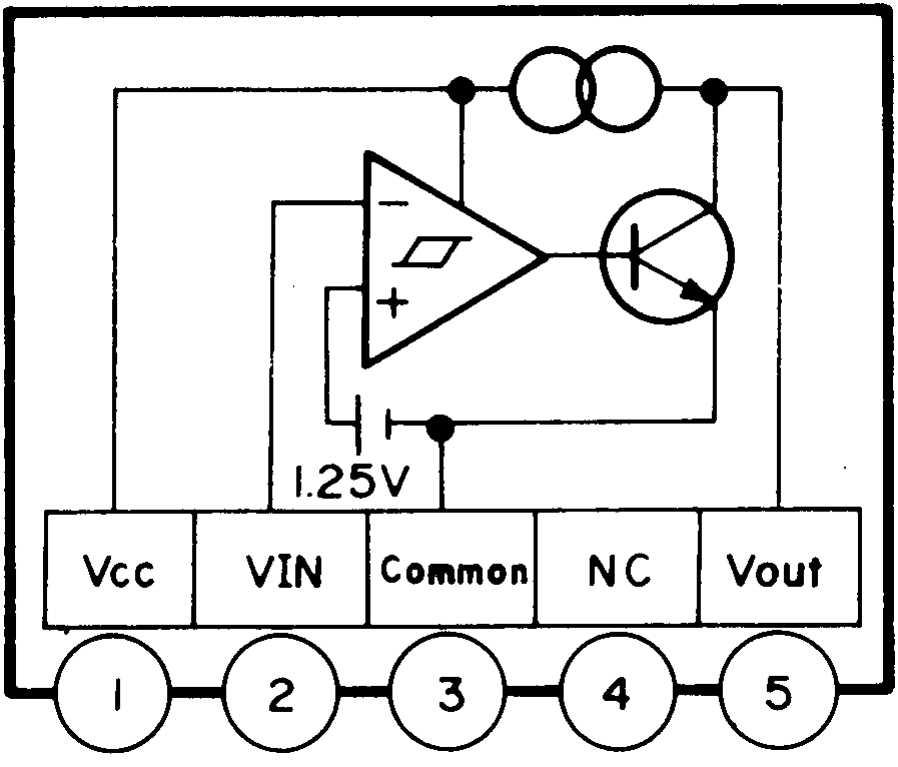
1.25V
Vcc
VIN
Common
NC
Vout
1
2
3
4
5

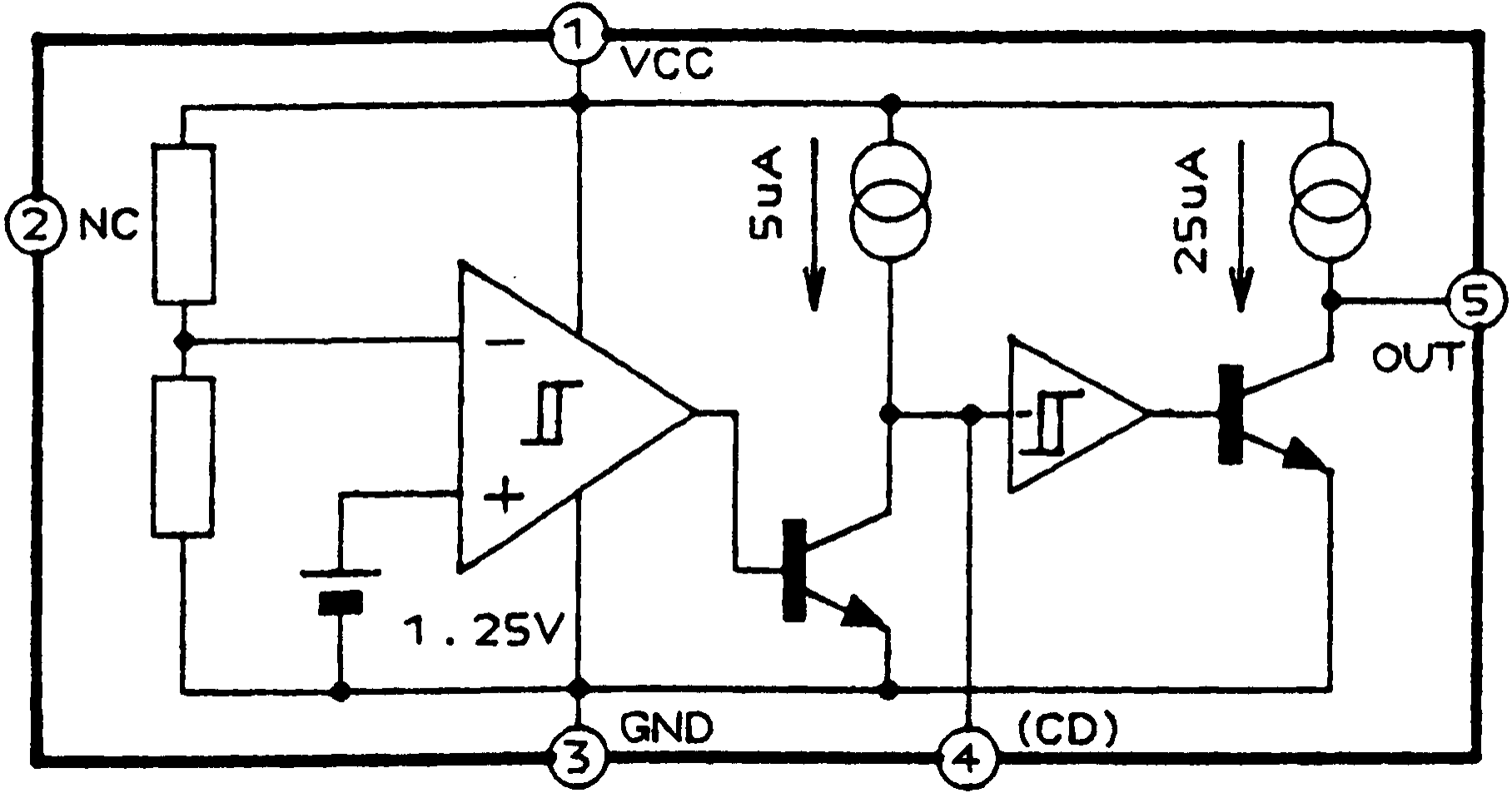
1
VCC
2
NC
5uA
25uA
5
OUT
1.25V
3
GND
4
(CD)

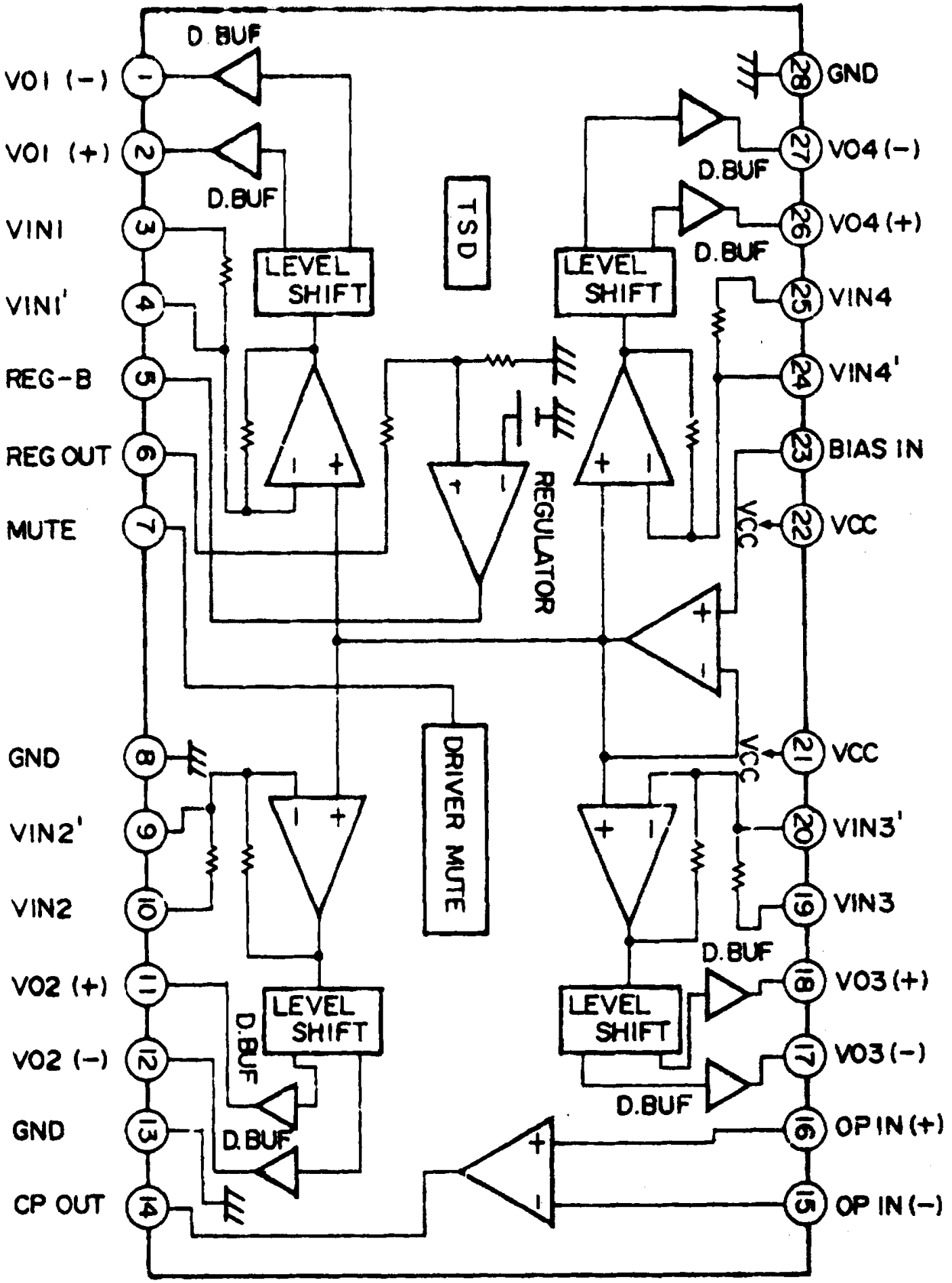
VO1 (-)
VO1 (+)
VIN1
VIN1'
REG-B
REG OUT
MUTE
GND
VIN2'
VIN2
VO2 (+)
VO2 (-)
GND
CP OUT
D. BUF
D.BUF
LEVEL SHIFT
TSD
REGULATOR
DRIVER MUTE
VCC
GND
VO4 (-)
VO4 (+)
VIN4
VIN4'
BIAS IN
VCC
VCC
VIN3'
VIN3
VO3 (+)
VO3 (-)
OP IN (+)
OP IN (-)

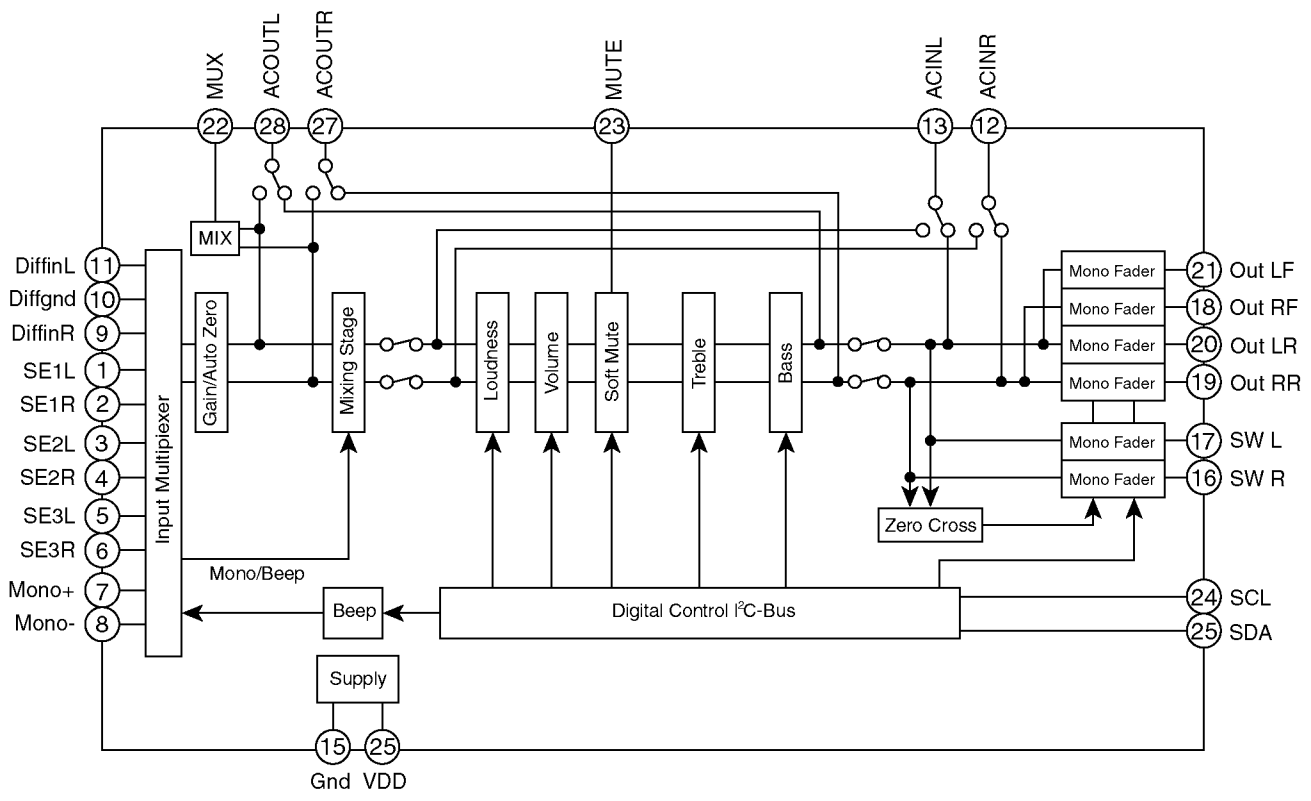
MUX
ACOUTL
ACOUTR
MUTE
ACINL
ACINR
22
28
27
23
13
12
MIX
DiffinL
Diffgnd
DiffinR
SE1L
SE1R
SE2L
SE2R
SE3L
SE3R
Mono+
Mono-
11
10
9
1
2
3
4
5
6
7
8
Input Multipiexer
Gain/Auto Zero
Mixing Stage
Loudness
Volume
Soft Mute
Treble
Bass
Mono Fader
Mono Fader
Mono Fader
Mono Fader
Mono Fader
Mono Fader
21
18
20
19
17
16
Out LF
Out RF
Out LR
Out RR
SW L
SW R
Zero Cross
Mono/Beep
Beep
Digital Control I²C-Bus
24
25
SCL
SDA
Supply
15
25
Gnd
VDD

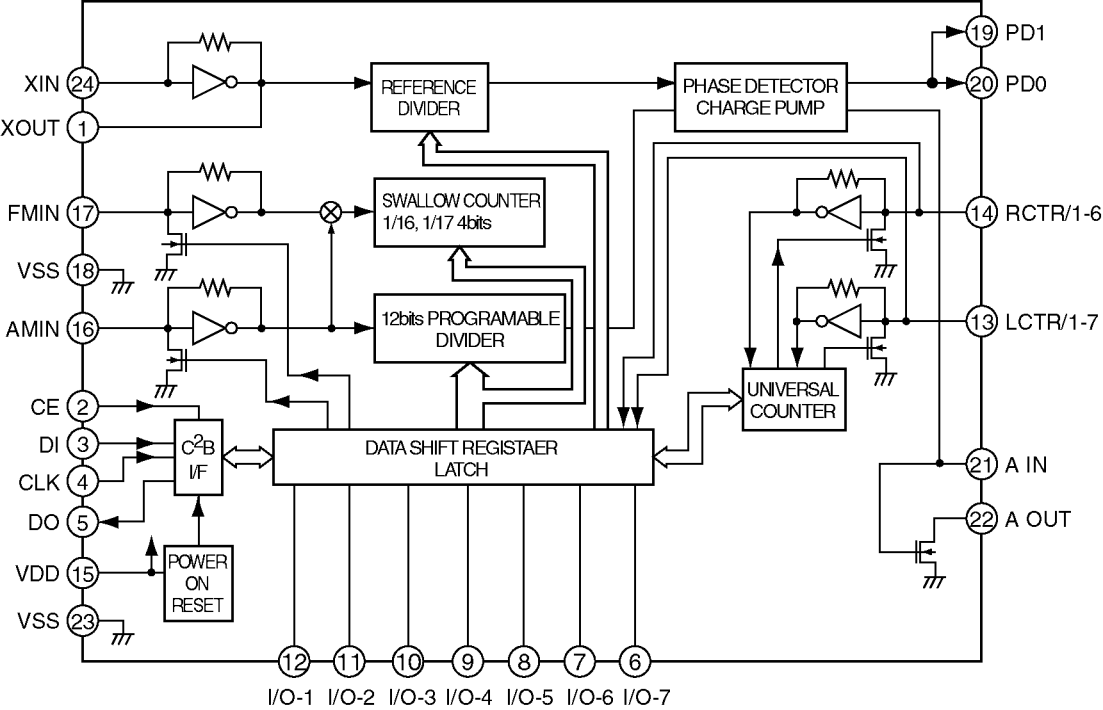
XIN 24
XOUT 1
FMIN 17
VSS 18
AMIN 16
CE 2
DI 3
CLK 4
DO 5
VDD 15
VSS 23
REFERENCE DIVIDER
PHASE DETECTOR CHARGE PUMP
SWALLOW COUNTER 1/16, 1/17 4bits
12bits PROGRAMABLE DIVIDER
C2B I/F
DATA SHIFT REGISTAER LATCH
POWER ON RESET
UNIVERSAL COUNTER
19 PD1
20 PD0
14 RCTR/1-6
13 LCTR/1-7
21 A IN
22 A OUT
12 I/O-1
11 I/O-2
10 I/O-3
9 I/O-4
8 I/O-5
7 I/O-6
6 I/O-7

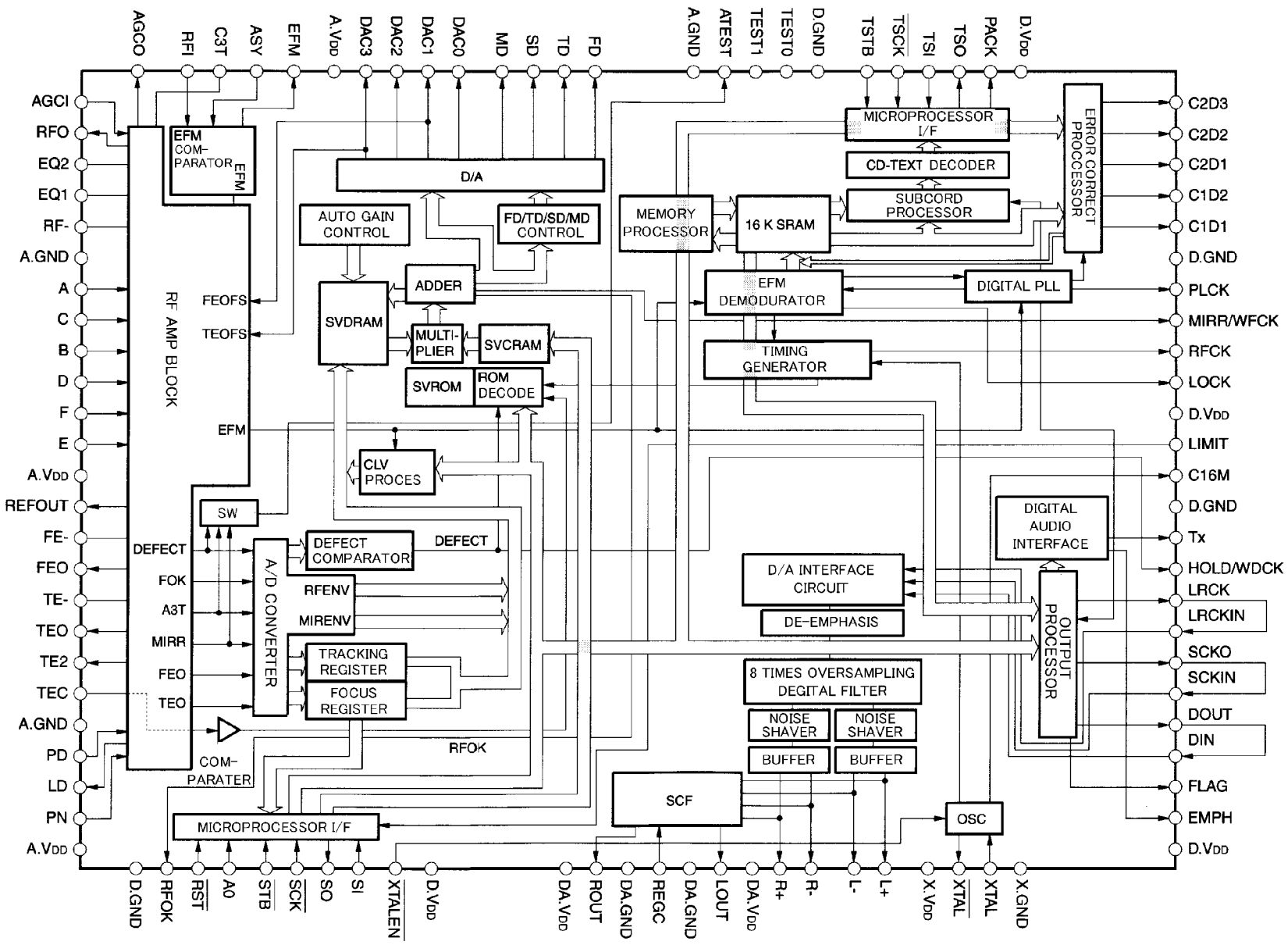
AGCO
RFI
C3T
ASY
EFM
A.VDD
DAC3
DAC2
DAC1
DAC0
MD
SD
TD
FD
A.GND
ATEST
TEST1
TEST0
D.GND
TSTB
TSCK
TSI
TSO
PACK
D.VDD
AGCI
RFO
EQ2
EQ1
RF-
A.GND
A
C
B
D
F
E
A.VDD
REFOUT
FE-
FEO
TE-
TEO
TE2
TEC
A.GND
PD
LD
PN
A.VDD
C2D3
C2D2
C2D1
C1D2
C1D1
D.GND
PLCK
MIRR/WFCK
RFCK
LOCK
D.VDD
LIMIT
C16M
D.GND
Tx
HOLD/WDCK
LRCK
LRCKIN
SCKO
SCKIN
DOUT
DIN
FLAG
EMPH
D.VDD
RF AMP BLOCK
EFM COM-PARATOR
EFM
FEOFS
TEOFS
EFM
DEFECT
FOK
A3T
MIRR
FEO
TEO
COM-PARATER
RFOK
A/D CONVERTER
DEFECT COMPARATOR
DEFECT
RFENV
MIRENV
TRACKING REGISTER
FOCUS REGISTER
SW
CLV PROCES
D/A
AUTO GAIN CONTROL
FD/TD/SD/MD CONTROL
ADDER
SVDRAM
MULTI-PLIER
SVCRAM
SVROM
ROM DECODE
MICROPROCESSOR I/F
MEMORY PROCESSOR
16 K SRAM
MICROPROCESSOR I/F
CD-TEXT DECODER
SUBCORD PROCESSOR
ERROR CORRECT PROCESSOR
EFM DEMODURATOR
DIGITAL PLL
TIMING GENERATOR
DIGITAL AUDIO INTERFACE
D/A INTERFACE CIRCUIT
DE-EMPHASIS
OUTPUT PROCESSOR
8 TIMES OVERSAMPLING DEGITAL FILTER
NOISE SHAVER
NOISE SHAVER
BUFFER
BUFFER
SCF
OSC
D.GND
RFOK
RST
A0
STB
SCK
SO
SI
XTALEN
D.VDD
DA.VDD
ROUT
DA.GND
REGC
DA.GND
LOUT
DA.VDD
R+
R-
L-
L+
X.VDD
XTAL
XTAL
X.GND

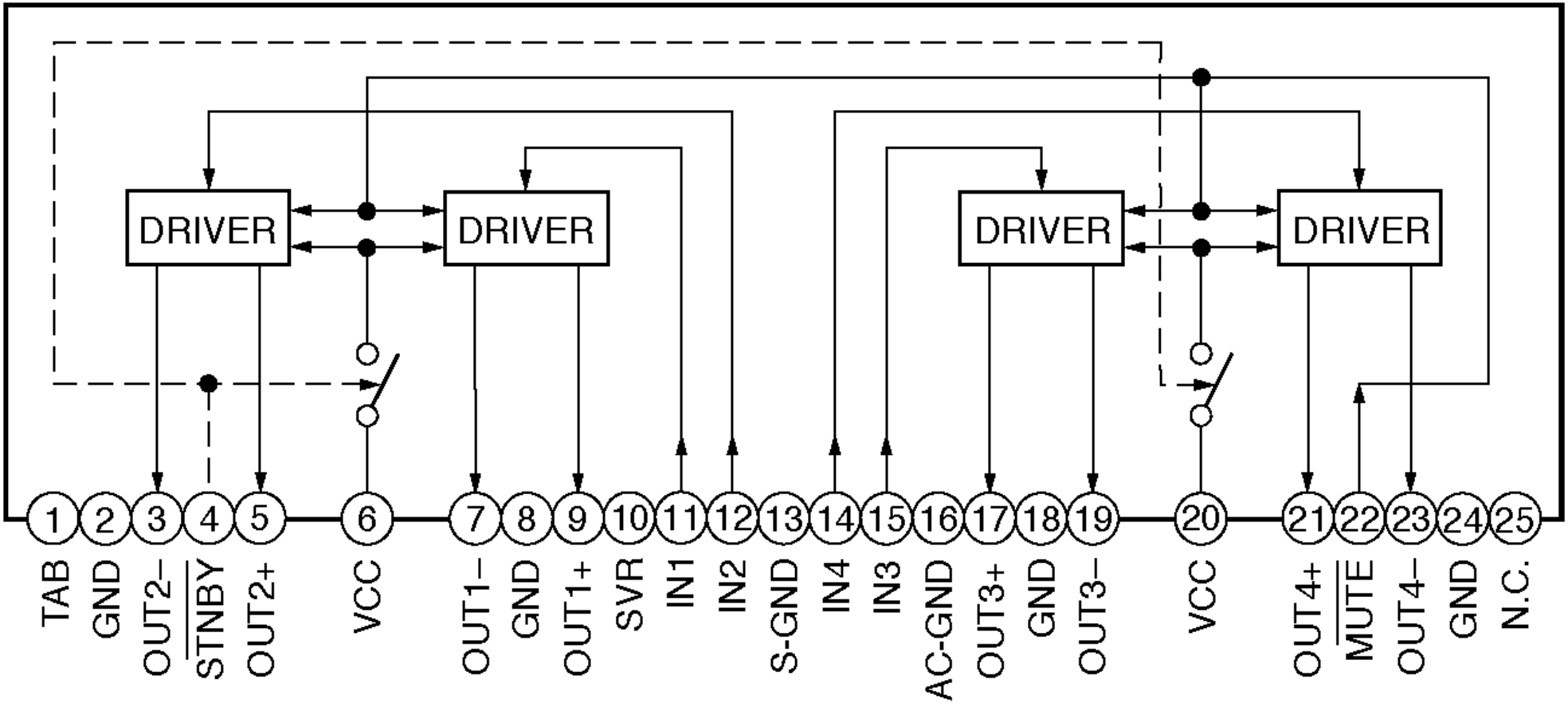
DRIVER
DRIVER
DRIVER
DRIVER
1 TAB
2 GND
3 OUT2–
4 STNBY
5 OUT2+
6 VCC
7 OUT1–
8 GND
9 OUT1+
10 SVR
11 IN1
12 IN2
13 S-GND
14 IN4
15 IN3
16 AC-GND
17 OUT3+
18 GND
19 OUT3–
20 VCC
21 OUT4+
22 MUTE
23 OUT4–
24 GND
25 N.C.

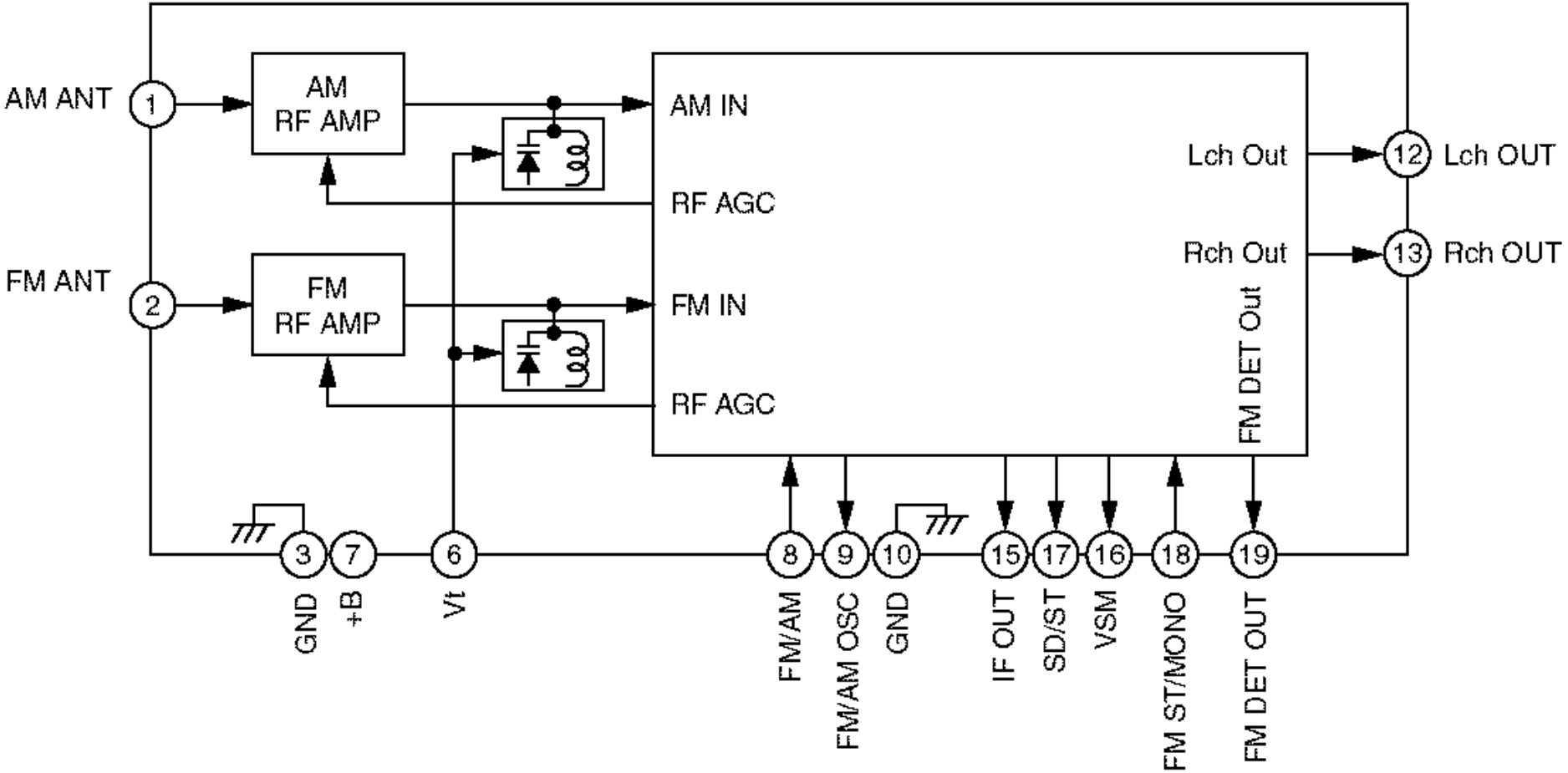
AM ANT
1
AM
RF AMP
FM ANT
2
FM
RF AMP
AM IN
RF AGC
FM IN
RF AGC
Lch Out
Rch Out
FM DET Out
12
Lch OUT
13
Rch OUT
3
GND
7
+B
6
Vt
8
FM/AM
9
FM/AM OSC
10
GND
15
IF OUT
17
SD/ST
16
VSM
18
FM ST/MONO
19
FM DET OUT

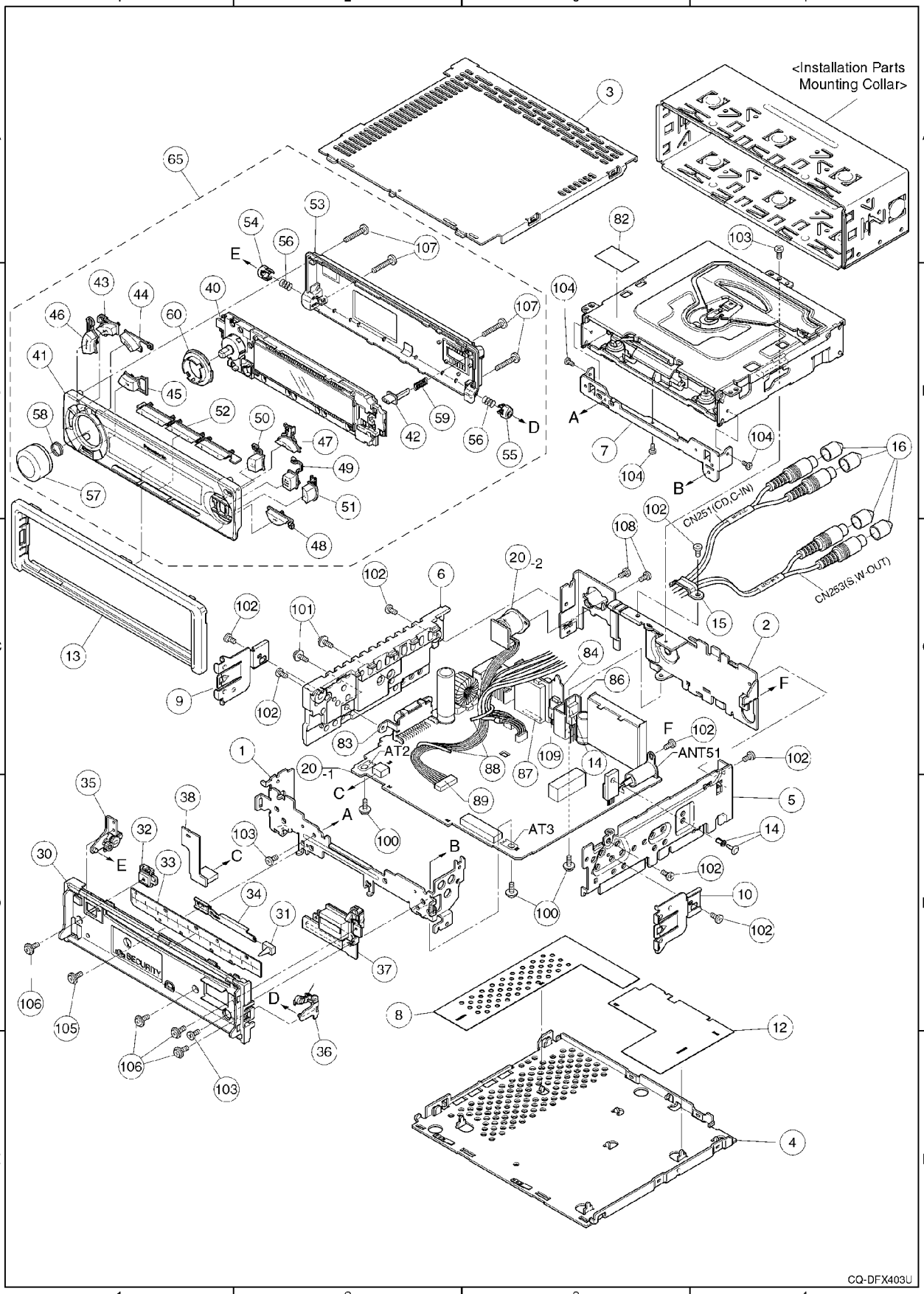
<Installation Parts
Mounting Collar>
CN251(CD,C-IN)
CN253(S.W-OUT)
ANT51
AT2
AT3
SECURITY
CQ-DFX403U

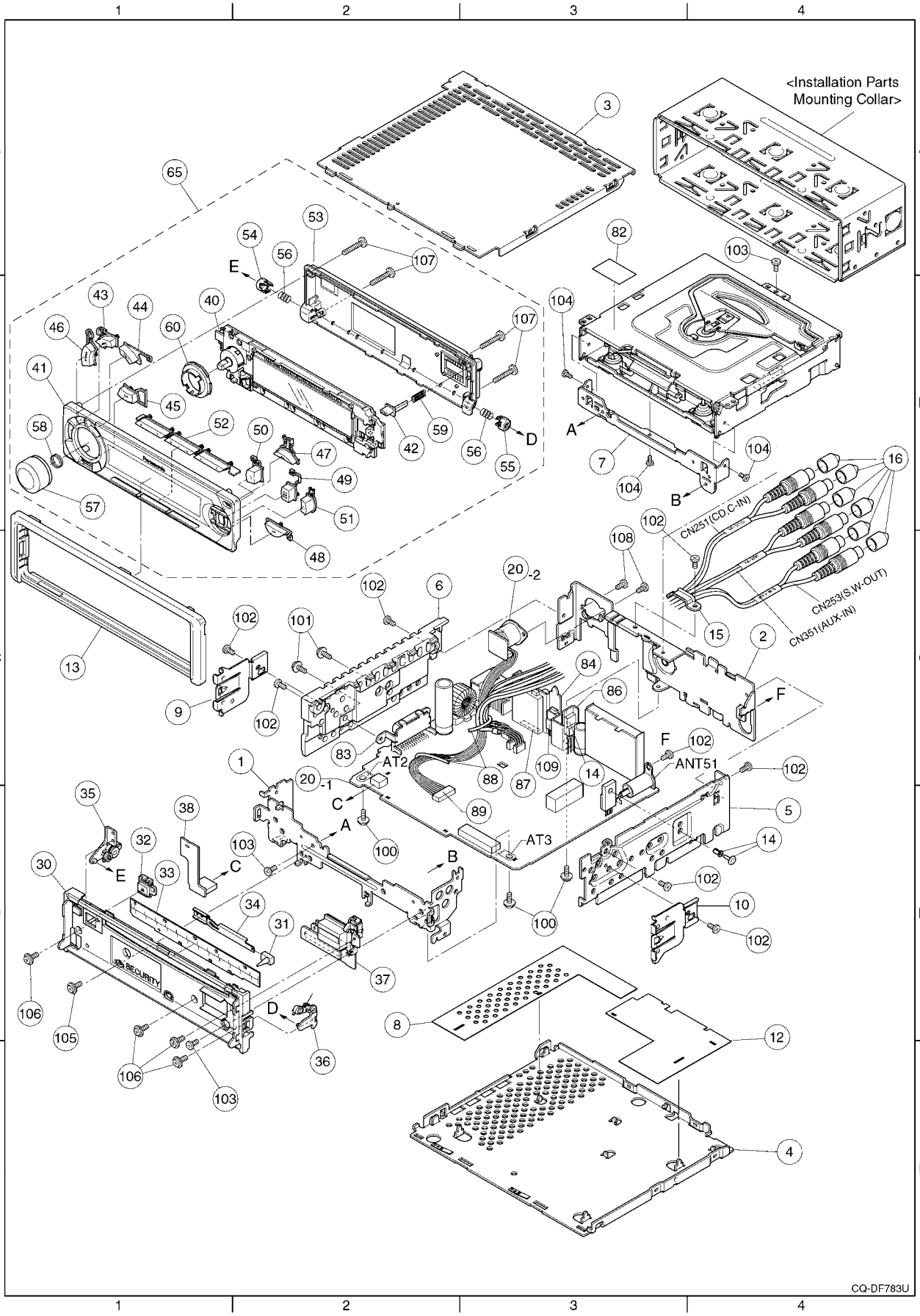
<Installation Parts
Mounting Collar>
CN251(CD.C-IN)
CN253(S.W-OUT)
CN351(AUX-IN)
ANT51
AT2
AT3
SECURITY
CQ-DF783U

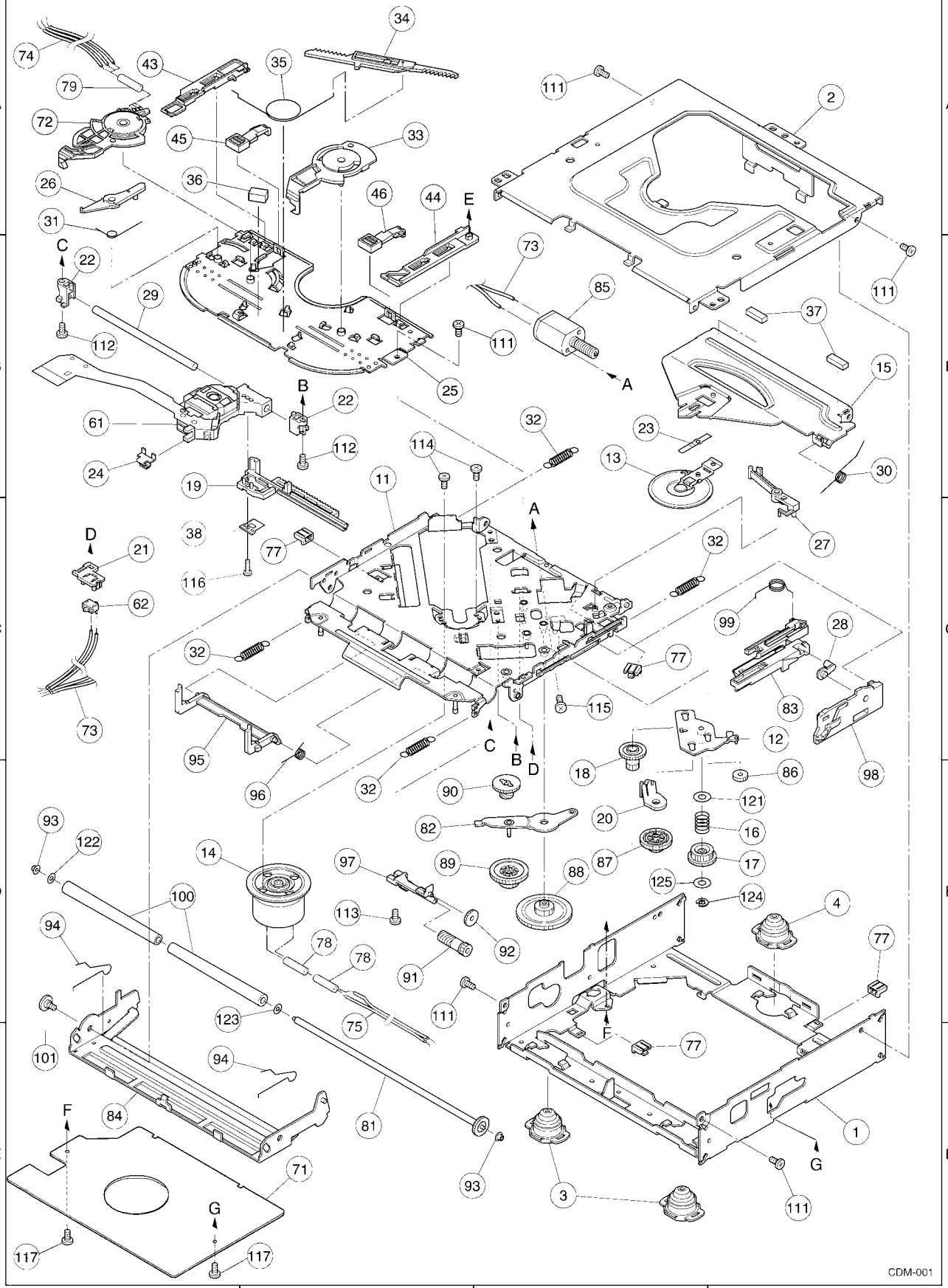
1
2
3
4
11
12
13
15
16
17
18
19
20
21
22
23
24
25
26
27
28
29
30
31
32
33
34
35
36
37
38
44
45
46
61
62
71
72
73
74
75
77
78
79
81
82
83
84
85
86
87
88
89
90
91
92
93
94
95
96
97
98
99
100
101
111
112
113
114
115
116
117
121
122
123
124
125
A
B
C
D
E
F
G
CDM-001

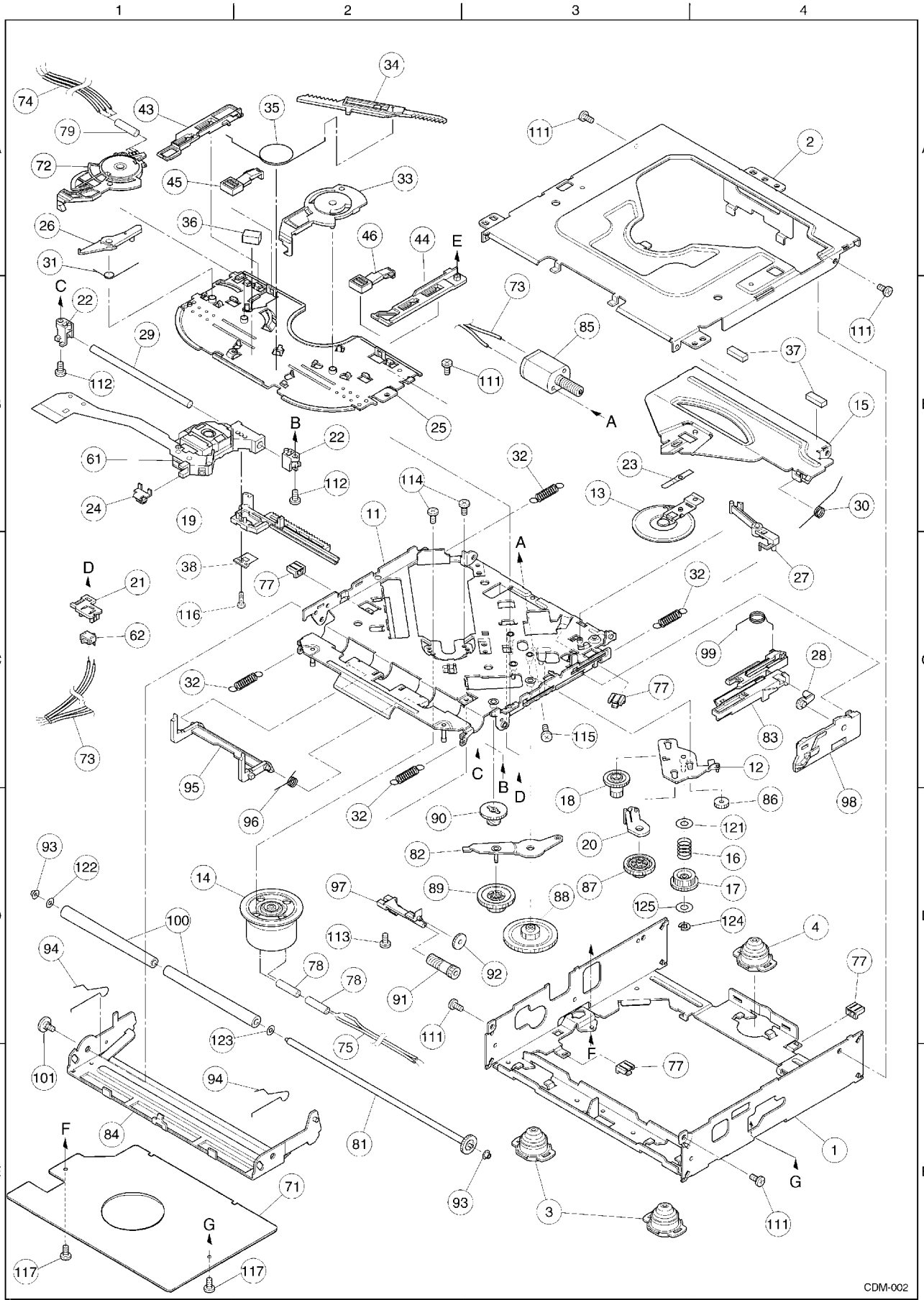
1
2
3
4
A
B
C
D
E
F
G
CDM-002

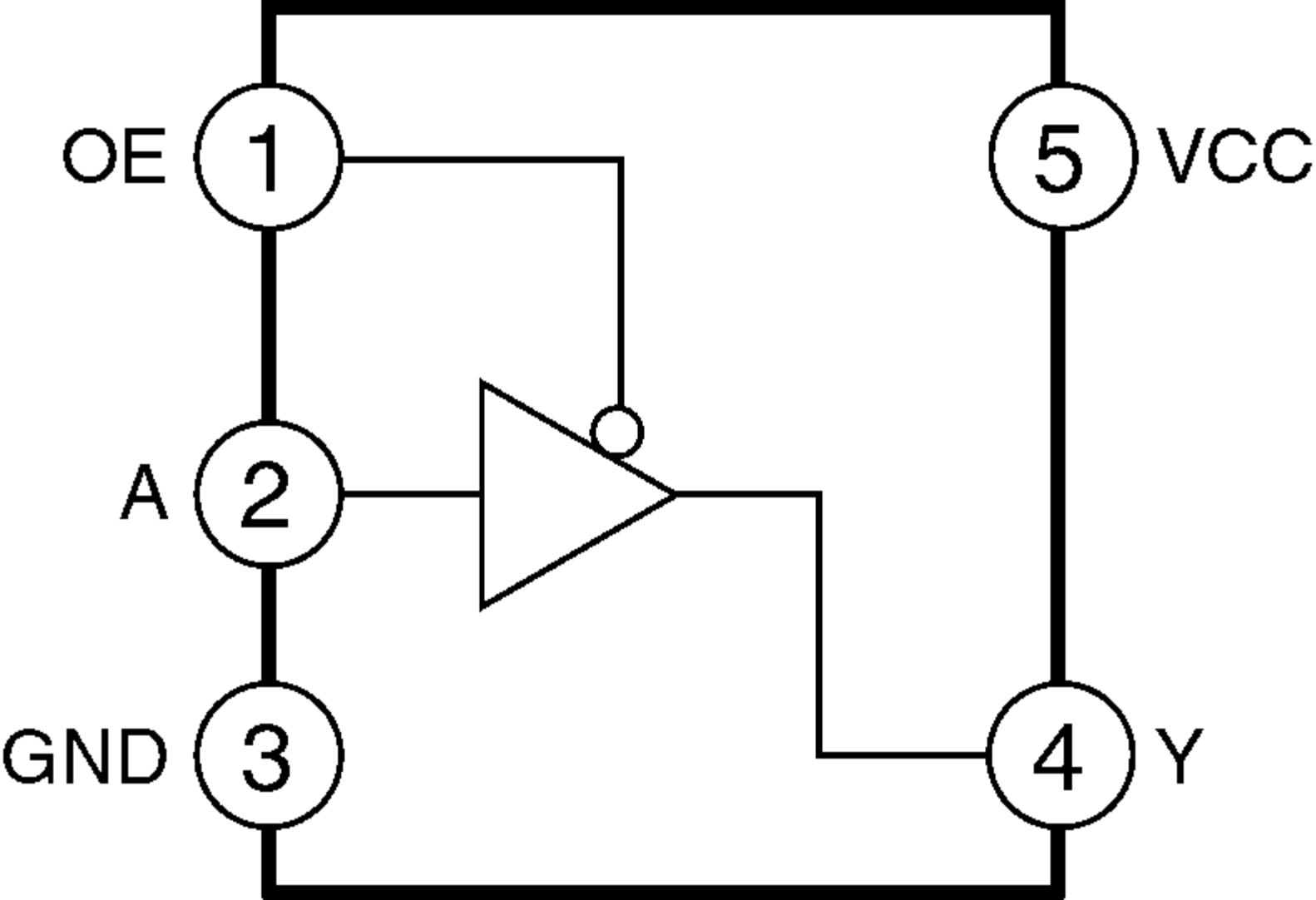
OE
1
5
VCC
A
2
GND
3
4
Y

**CAUTION:**

This product utilizes a laser diode with the unit turned "on", laser radiation is emitted from the pickup lens.

Laser radiation from the pickup lens is safety level, but be sure the followings:

1. Do not disassemble the optical pickup unit, since radiation from exposed laser diode is dangerous.
2. Do not adjust the variable resistor on the pickup unit. It was already adjusted.
3. Do not look at the focus lens using optical instruments.
4. Recommend not to look at pickup lens for a long time.

**DANGER!** Visible and invisible laser radiation when open. Avoid direct exposure to beam.

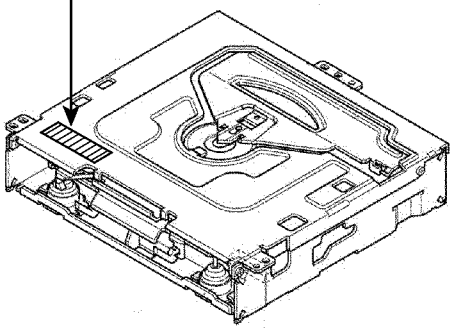

Deck Ass'y (Upper Side)

**Caution**

This Product utilizes a laser.

Use of controls or adjustments or performance of procedures other than those specified herein may result in hazardous radiation exposure.

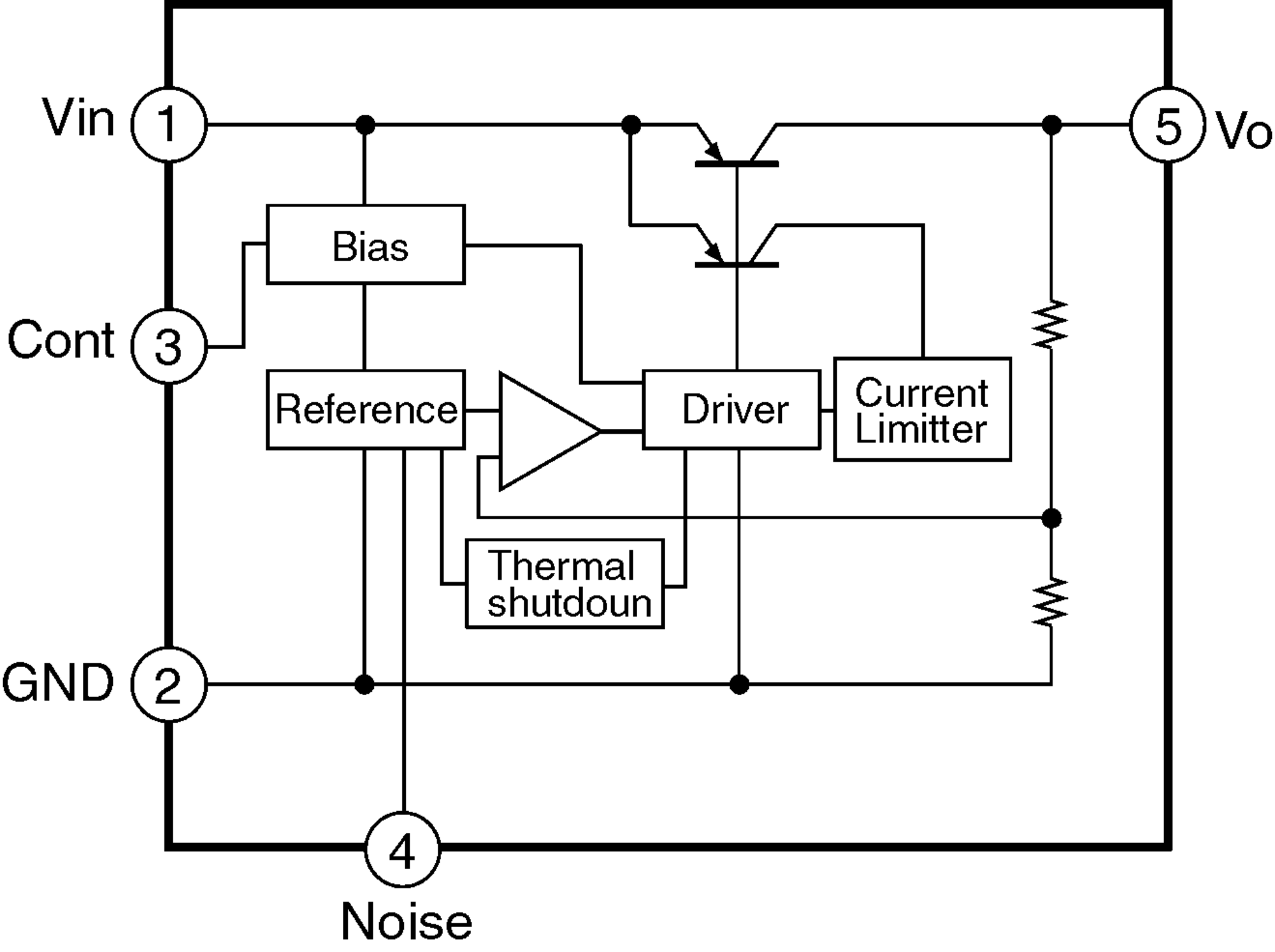
Vin
1
Cont
3
GND
2
4
Noise
5
Vo
Bias
Reference
Driver
Current
Limitter
Thermal
shutdoun

DIGITAL DEEMPHSIS
&TIMES OVER SAMPLING DIGITAL FILTER
1 BIT DAC PWMLOGIC
PWM (R)
PWM (L)
AVSS1
AVDD1
OUTR
OUTL
SRDATAIN(PSEL)
IOSEL
CLVS
CRC
BLKCK
GIO1(/CLDCK)
SBCK
SUBC
DEMPH
FLAG6(RESY)
SSEL
SQCK(GIO0)
SUBQ
AVSS2
AVDD2
PCK(DSLB)
EFM(CK384)
PLLF
PLLF2
DSLF
IREF
DRF
ARF
RSEL(GIO3)
PSEL
MLD
MCLK
MDATA
VCOF2
VCOF
BYTCK(TRVSTP)
SMCK
GIO2(FCLK)
PMCK(PLAY)
CSEL
MSEL
X2
X1
STAT
SUBCODE BUFFER
CD-TEXT BUFFER
DSL. PLL VCO
EFM DEMODULATION
EYNC INTERPOLATION
SUBCODE DEMODULATION
16K SRAM
CIRC ERROR CORRECTION
DEINTERLEAVE
DIGITAL AUDIO INTERFACE
CLV SERVO
INTER POLATION SOT MUTING DIGITAL ATTENUATION
FLAG
IPFLAG
TX
ECM
ECS
PC
LRCK
SRDATA
BCLK
DMUTE
TOFS
KICK
TRV
VREF
TVD
TRD
FOD
TBAL
FBAL
/TLOCK
/FLOCK
LDON
WVEL
SENSE
VCO
TIMING GENERATOR PITCH CONTROL
MICRO COMPUTER INTERFACE
SERVO CPU
D/A CONVERTER
OUTPUT PORT
A/D CONVERTER
INPUT PORT
SERVO TIMING GENERATOR
VDD
VSS
DVDD1
DVSS1
/RST
/TEST
FE
TE
RFENV
TRCRS
VDET
BDO
/RFDET
OFT

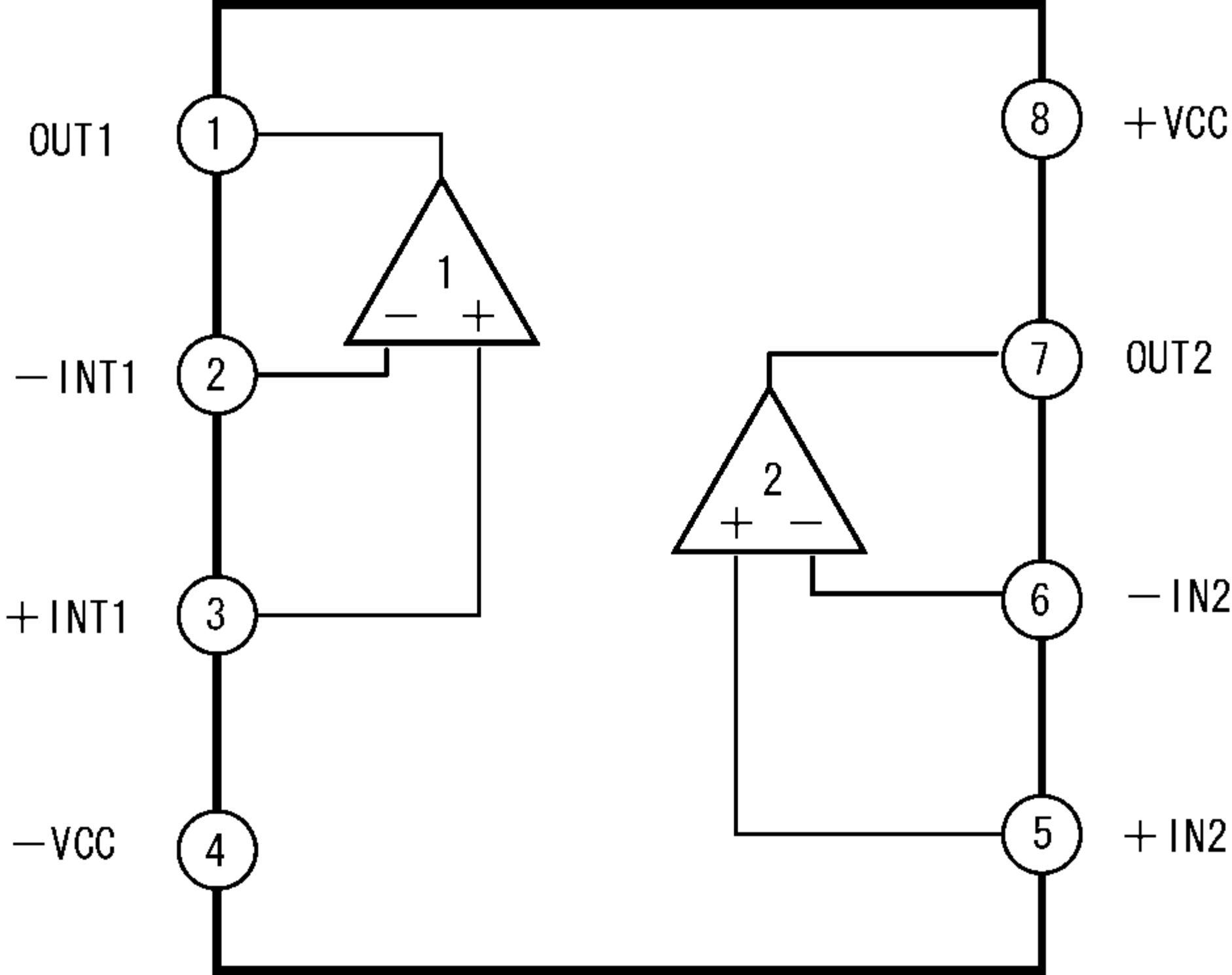
OUT1
1
−INT1
2
+INT1
3
−VCC
4
8
+VCC
7
OUT2
6
−IN2
5
+IN2
1
2

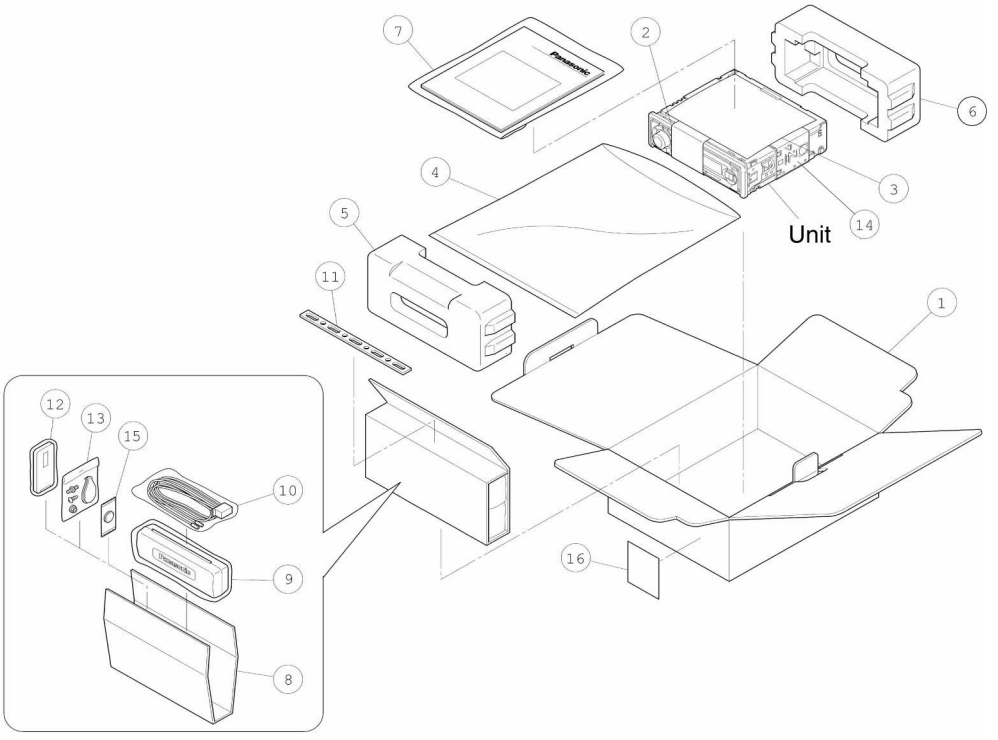
7
2
6
4
3
14
Unit
5
11
1
12
13
15
10
9
8
16

# 22.3. Display Block

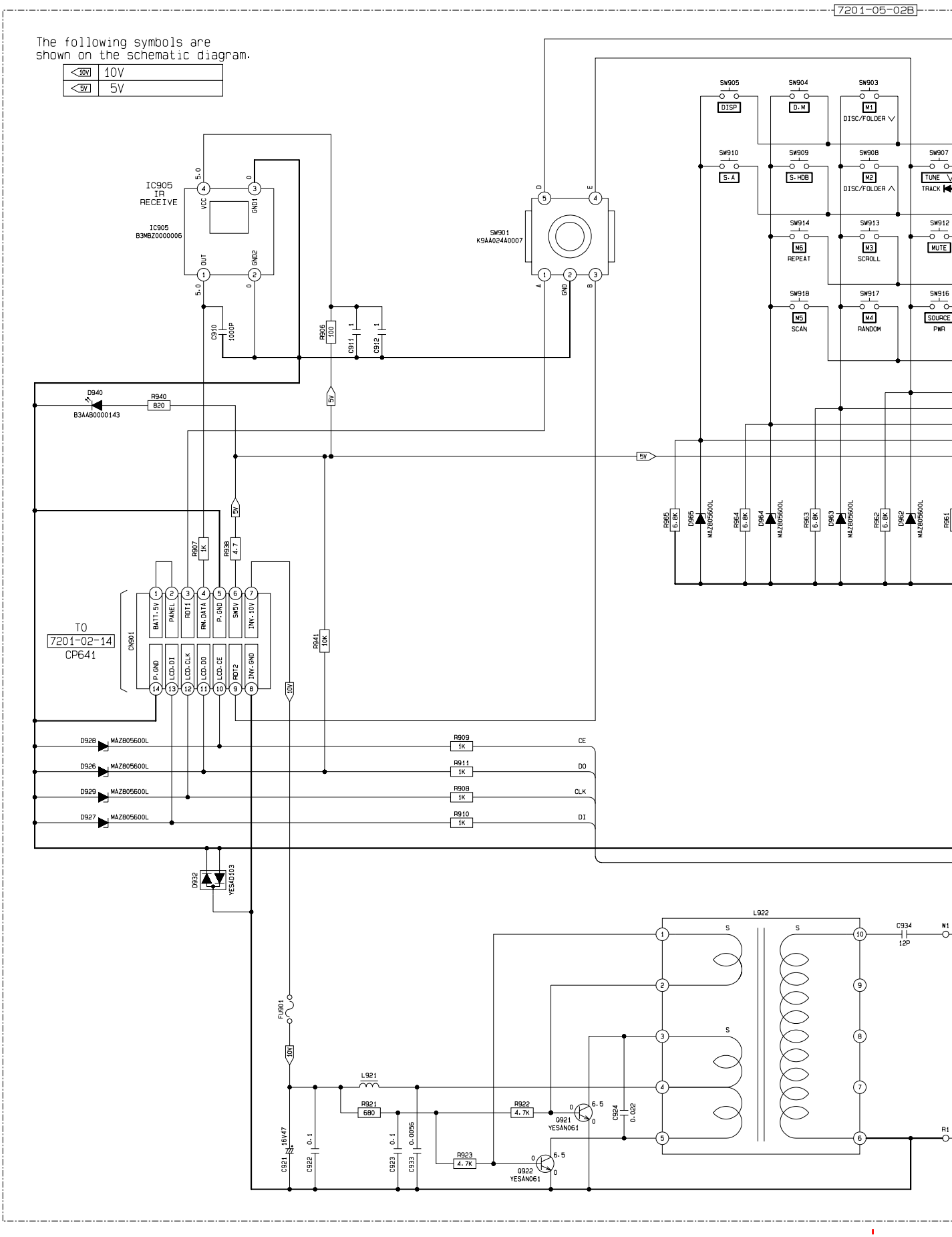

7201-05-02B

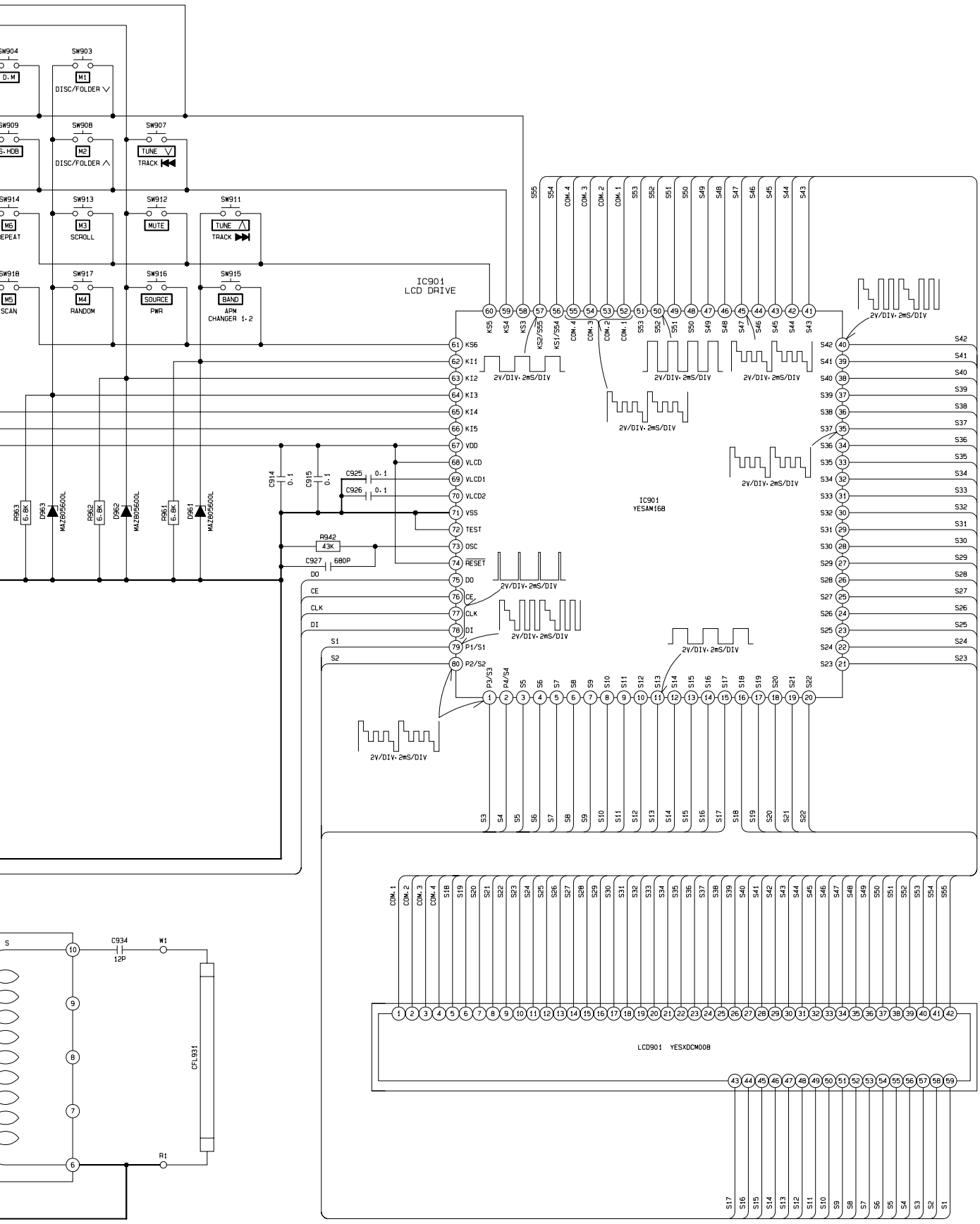
SW904
D.M
SW903
M1
DISC/FOLDER
SW909
SW908
M2
DISC/FOLDER
SW907
TUNE
TRACK
SW914
M6
SW913
M3
SCROLL
SW912
MUTE
SW911
TUNE
TRACK
SW918
M5
SW917
M4
RANDOM
SW916
SOURCE
PWR
SW915
BAND
APM
CHANGER 1-2
IC901
LCD DRIVE
IC901
YESAM168
2V/DIV·2mS/DIV
R963 6.8K
R962 6.8K
R961 6.8K
D963 MAZ8056OOL
D962 MAZ8056OOL
D961 MAZ8056OOL
C914 0.1
C915 0.1
C925 0.1
C926 0.1
R942 43K
C927 680P
KS6
KI1
KI2
KI3
KI4
KI5
VDD
VLCD
VLCD1
VLCD2
VSS
TEST
OSC
RESET
DO
CE
CLK
DI
P1/S1
P2/S2
S1
S2
C934 12P
W1
R1
CFL931
LCD901 YESXDCM008

# 22.4. CD Servo Block-1 [CQ-DF783U]

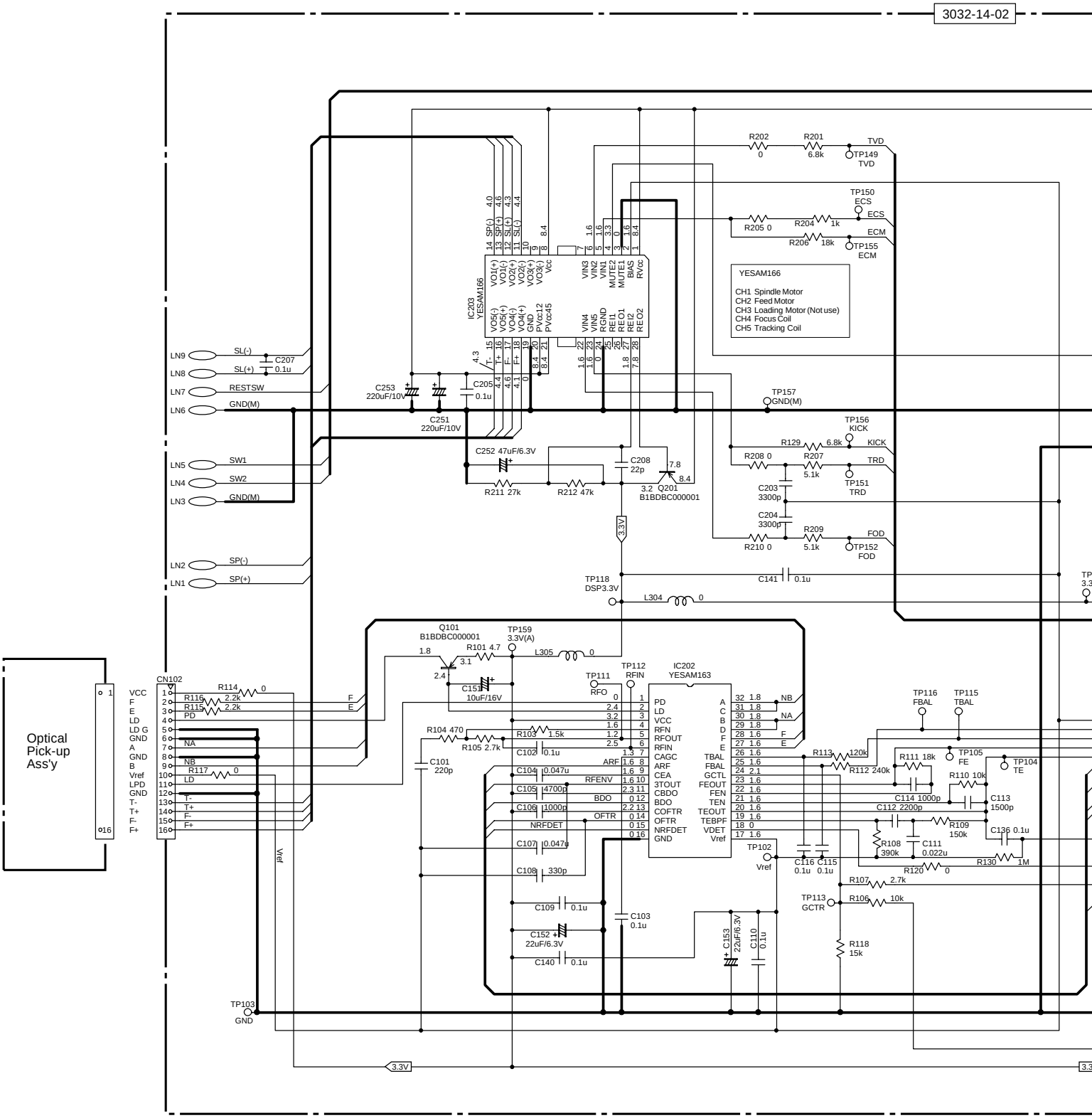

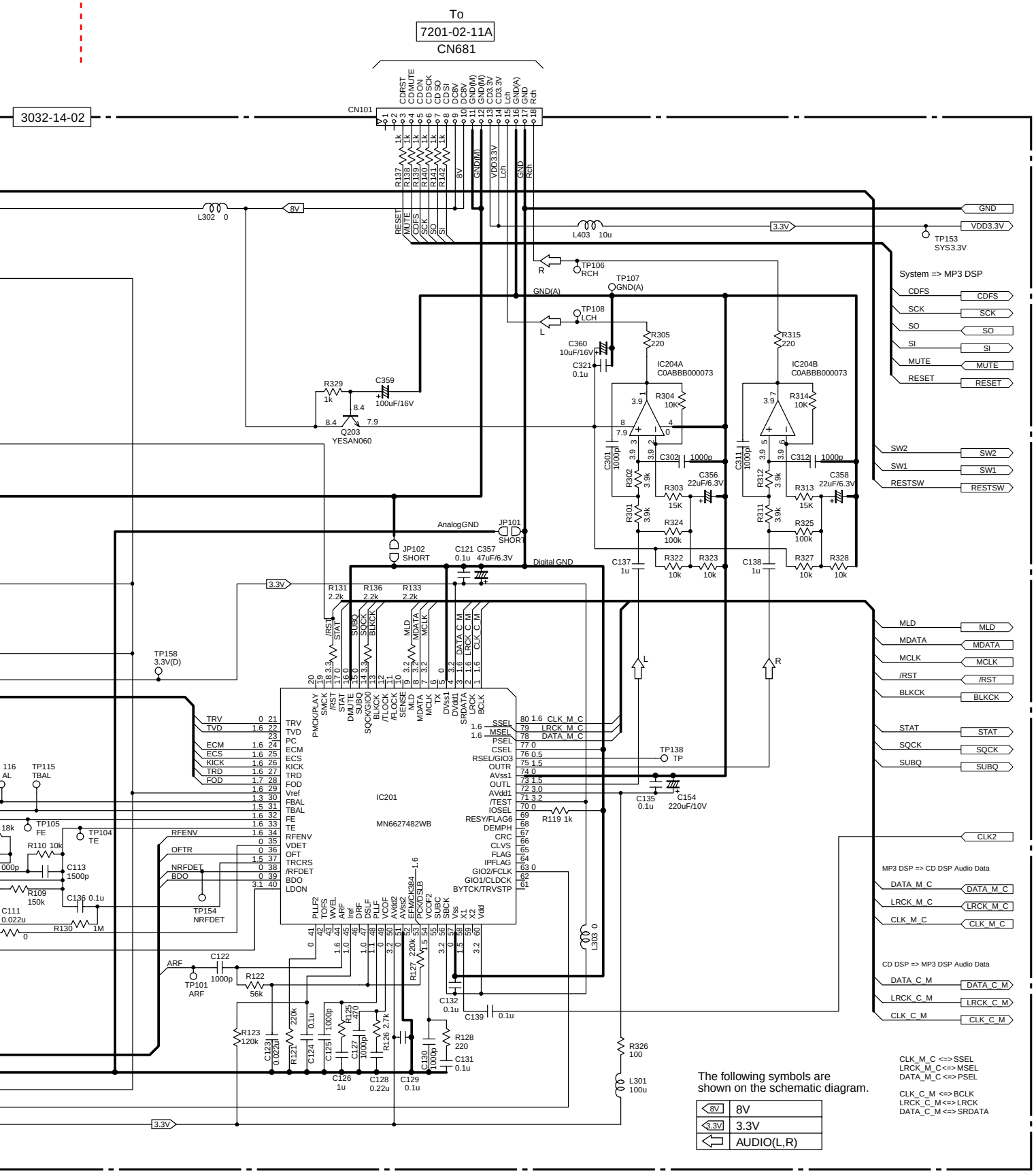
To
7201-02-11A
CN681
3032-14-02
CN101
CDRST
CDMUTE
CDON
CDSCK
CDSO
CDSI
DC3V
DC8V
GND(M)
GND(M)
CD3.3V
CD3.3V
Lch
GND(A)
GND
Rch
R137 1k
R138 1k
R139 1k
R140 1k
R141 1k
R142 1k
8V
GND(M)
VDD3.3V
Lch
GND
Rch
RESET
MUTE
CDFS
SCK
SO
SI
L302 0
8V
L403 10u
3.3V
GND
VDD3.3V
TP153
SYS3.3V
R
TP106
RCH
TP107
GND(A)
GND(A)
TP108
LCH
L
System => MP3 DSP
CDFS
SCK
SO
SI
MUTE
RESET
C360
10uF/16V
C321
0.1u
R305
220
R315
220
IC204A
C0ABBB000073
IC204B
C0ABBB000073
R304
10K
R314
10K
R329
1k
C359
100uF/16V
Q203
YESAN060
C301
1000p
C302
1000p
C311
1000p
C312
1000p
R302
3.9k
R312
3.9k
C356
22uF/6.3V
C358
22uF/6.3V
R303
15K
R313
15K
R301
3.9k
R311
3.9k
R324
100k
R325
100k
SW2
SW1
RESTSW
AnalogGND
JP101
SHORT
JP102
SHORT
C121
0.1u
C357
47uF/6.3V
Digital GND
C137
1u
C138
1u
R322
10k
R323
10k
R327
10k
R328
10k
3.3V
R131
2.2k
R136
2.2k
R133
2.2k
TP158
3.3V(D)
/RST
STAT
SUBQ
SQCK
BLKCK
MLD
MDATA
MCLK
DATA_C_M
LRCK_C_M
CLK_C_M
MLD
MDATA
MCLK
/RST
BLKCK
STAT
SQCK
SUBQ
TRV
TVD
ECM
ECS
KICK
TRD
FOD
RFENV
OFTR
NRFDET
BDO
IC201
MN6627482WB
PMCK/PLAY
SMCK
/RST
STAT
DMUTE
SUBQ
SCOK/GIO0
BLKCK
/TLOCK
/FLOCK
SENSE
MLD
MDATA
MCK
TX
DVss1
DVdd1
SRDATA
LRCK
BCLK
SSEL
MSEL
PSEL
CSEL
RSEL/GIO3
OUTR
AVss1
OUTL
AVdd1
/TEST
IOSEL
RESY/FLAG6
DEMPH
CRC
CLVS
FLAG
IPFLAG
GIO2/FCLK
GIO1/CLDCK
BYTCK/TRVSTP
PLLF2
TOPS
WWEL
ARF
Iref
DRF
DSLF
PLLF
VCOF
AVdd2
AVss2
EHWCK384
PCKFDSLB
VCOF2
VBIC
SBCK
Vss
X1
X2
Vdd
TP105
FE
TP104
TE
R110 10k
C113
1500p
R109
150k
C136 0.1u
C111
0.022u
R130
1M
TP154
NRFDET
ARF
C122
1000p
TP101
ARF
R122
56k
R123
120k
C123
0.022u
R121
220k
C124
0.1u
C125
1000p
R125
470
C127
1000p
R126
2.7k
C126
1u
C128
0.22u
C129
0.1u
C130
1000p
R128
220
C131
0.1u
R127
220k
C132
0.1u
C139
0.1u
L303 0
R326
100
L301
100u
TP138
TP
C135
0.1u
C154
220uF/10V
R119 1k
CLK2
MP3 DSP => CD DSP Audio Data
DATA_M_C
LRCK_M_C
CLK_M_C
CD DSP => MP3 DSP Audio Data
DATA_C_M
LRCK_C_M
CLK_C_M
CLK_M_C <=> SSEL
LRCK_M_C <=> MSEL
DATA_M_C <=> PSEL
CLK_C_M <=> BCLK
LRCK_C_M <=> LRCK
DATA_C_M <=> SRDATA
The following symbols are shown on the schematic diagram.
8V
8V
3.3V
3.3V
AUDIO(L,R)
CDM-001-1/2

# 22.5. CD Servo Block-2 [CQ-DF783U]

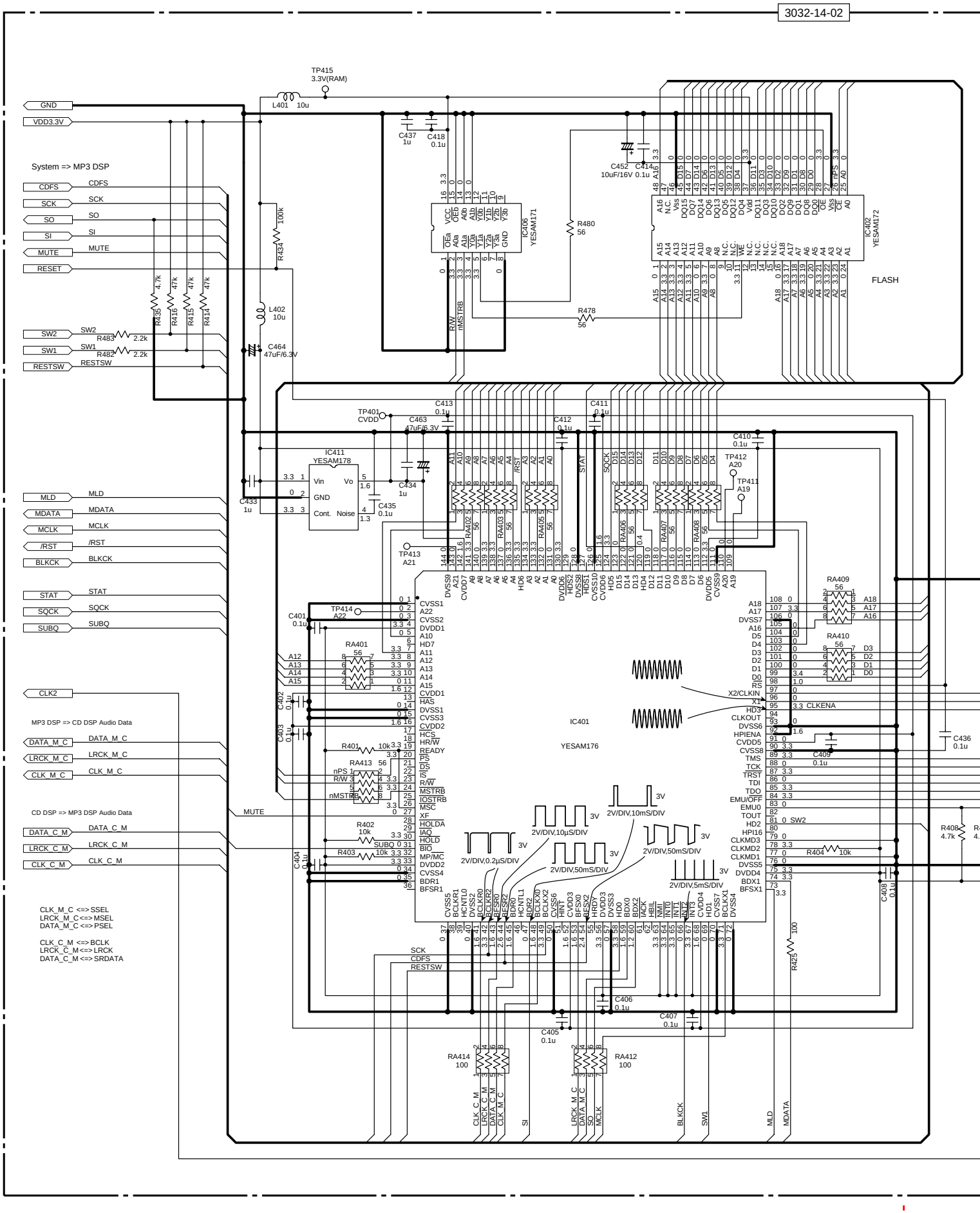

-02

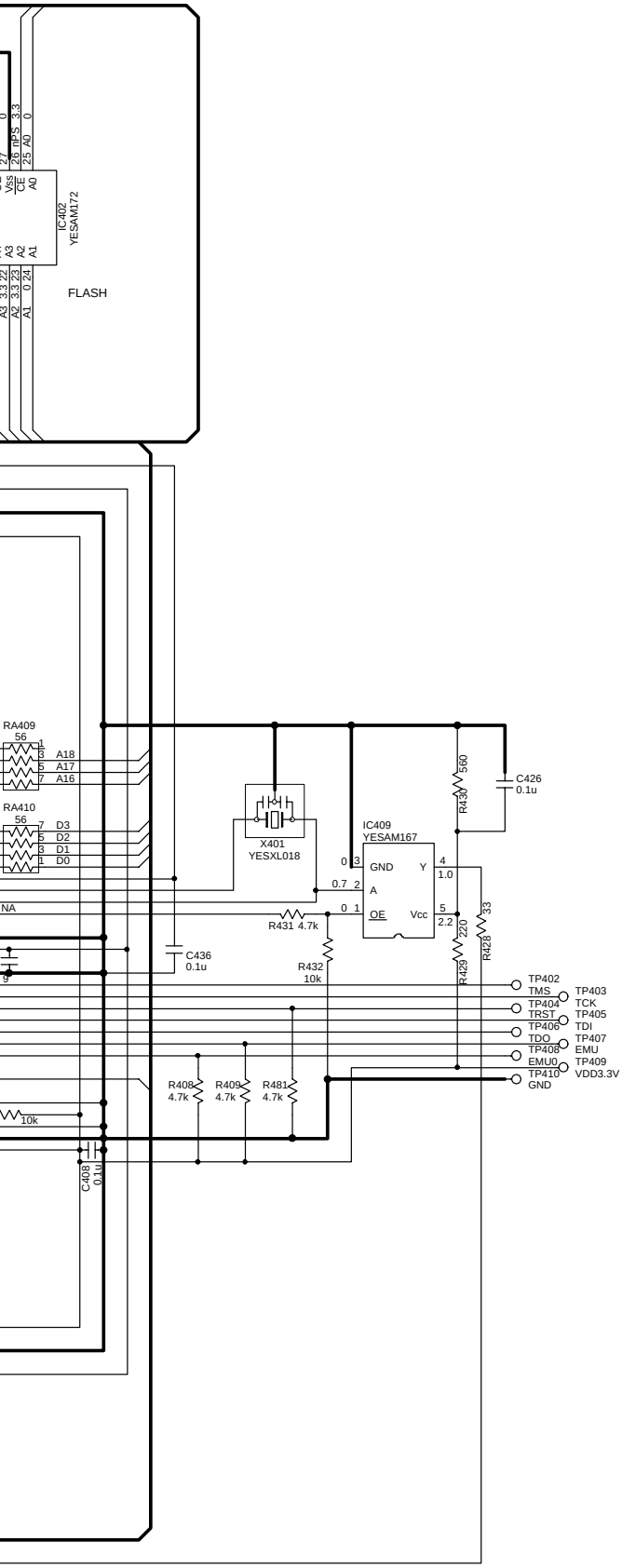
IC402
YESAM172
FLASH
RA409
56
A18
A17
A16
RA410
56
D3
D2
D1
D0
X401
YESXL018
IC409
YESAM167
GND
A
OE
Y
Vcc
R431 4.7k
R432
10k
R433
560
C426
0.1u
R428
33
R429
220
C436
0.1u
R408
4.7k
R409
4.7k
R481
4.7k
C408
0.1u
TP402
TMS
TP403
TCK
TP404
TRST
TP405
TDI
TP406
TDO
TP407
EMU
TP408
EMU0
TP409
VDD3.3V
TP410
GND

CDM-001-2/2

# 22.6. CD Servo Block [CQ-DFX403U]

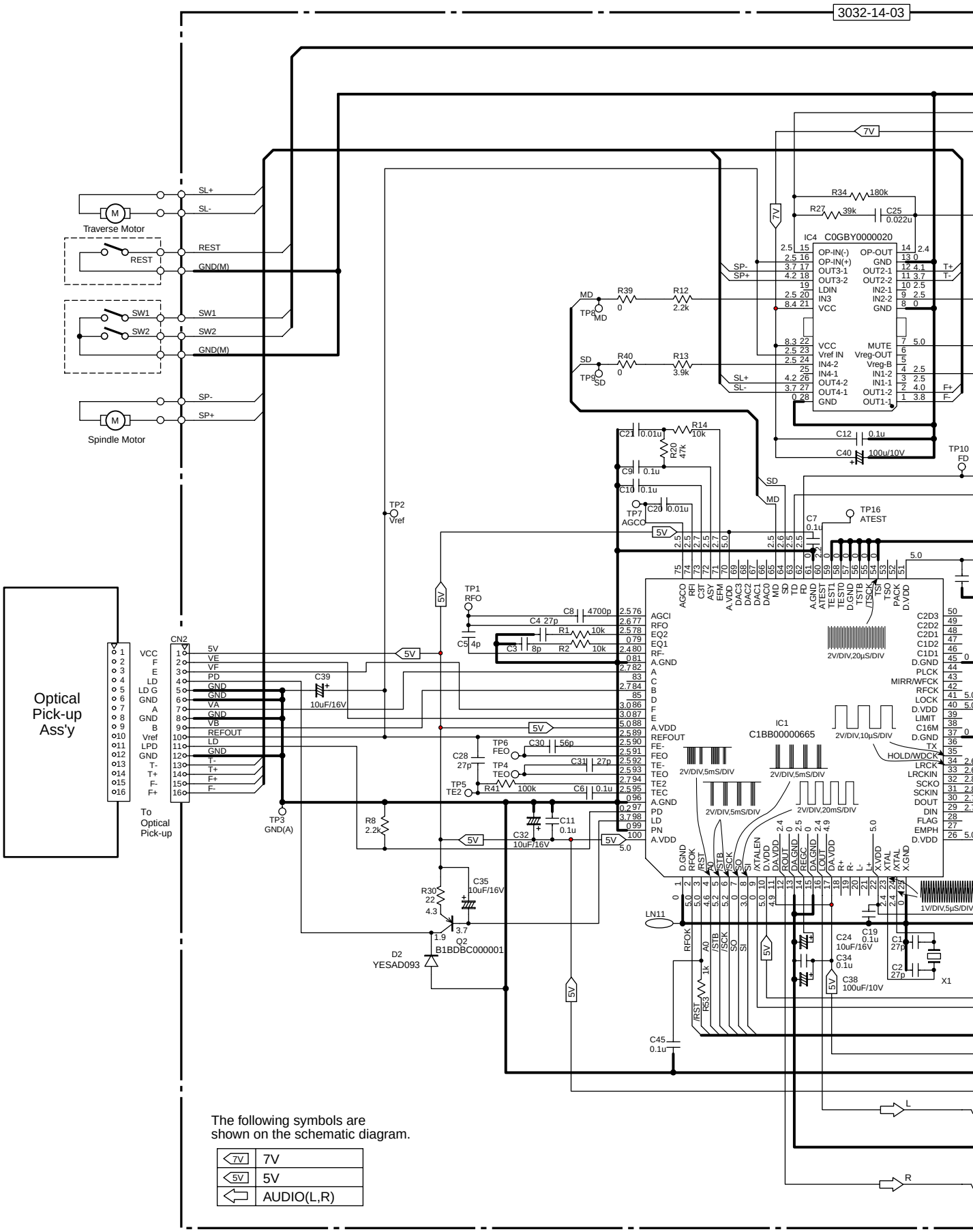

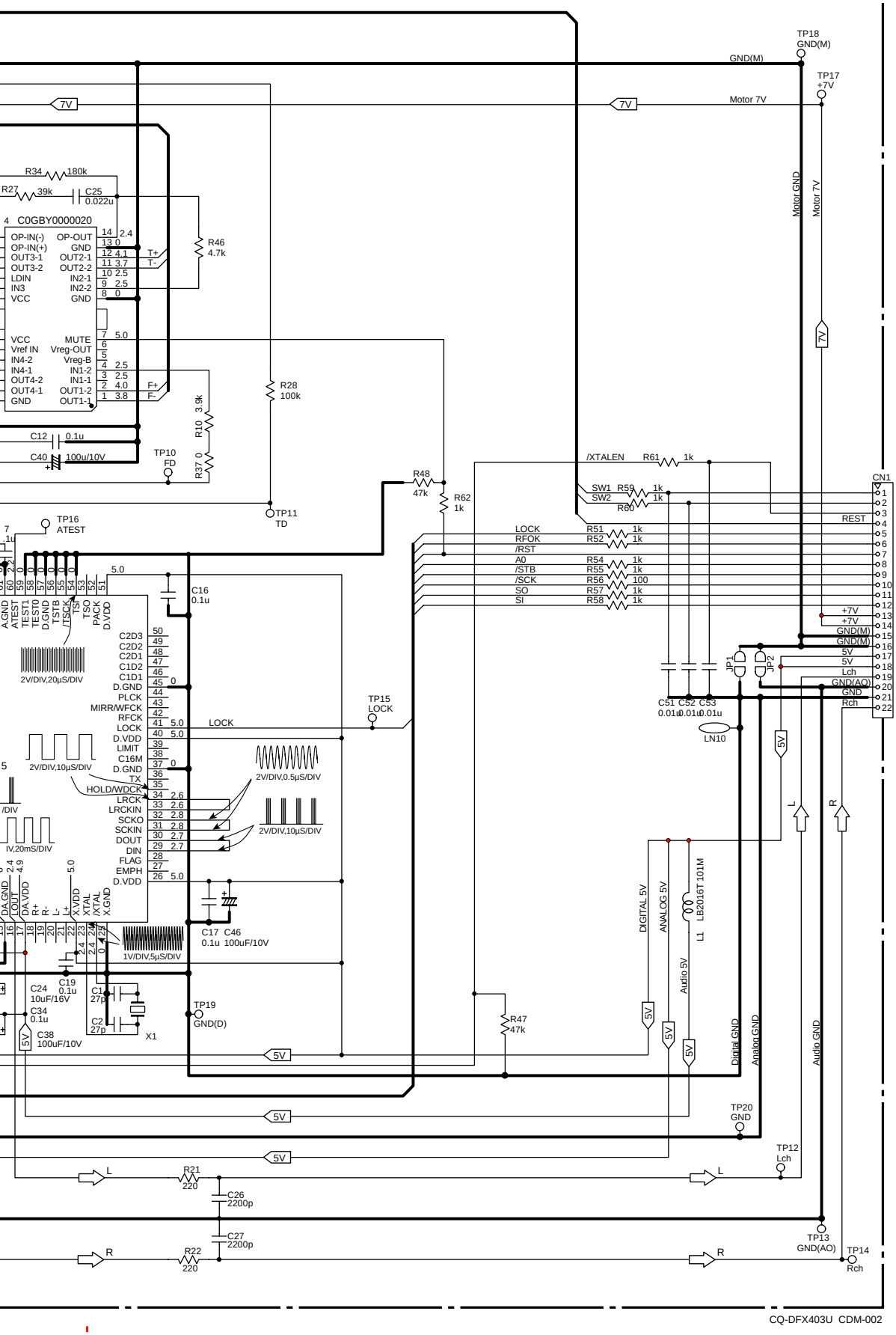


CQ-DFX403U CDM-002

Optical Pick-up Ass'y

CN2 (To Optical Pick-up): 1 VCC, 2 F, 3 E, 4 LD, 5 LD G, 6 GND, 7 A, 8 GND, 9 B, 10 Vref, 11 LPD, 12 GND, 13 T-, 14 T+, 15 F-, 16 F+

Traverse Motor: SL+, SL-

REST, GND(M)

SW1, SW2, GND(M)

Spindle Motor: SP-, SP+

IC4 C0GBY0000020: OP-IN(-), OP-IN(+), OUT3-1, OUT3-2, LDIN, IN3, VCC, VCC, Vref IN, IN4-2, IN4-1, OUT4-2, OUT4-1, GND, OP-OUT, GND, OUT2-1, OUT2-2, IN2-1, IN2-2, GND, MUTE, Vreg-OUT, Vreg-B, IN1-2, IN1-1, OUT1-2, OUT1-1; SP-, SP+, SL+, SL-, T+, T-, F+, F-

IC1 C1BB00000665: D.GND, RFOK, /RST, A0, /STB, /SCK, SO, SI, /XTALEN, D.VDD, DA.VDD, ROUT, DA.GND, REGC, DA.GND, LOUT, DA.VDD, R+, R-, L+, L-, X.VDD, XTAL, /XTAL, X.GND; AGCO, RFI, C3T, ASY, EFM, A.VDD, DAC3, DAC2, DAC1, DAC0, MD, SD, TD, FD, A.GND, ATEST, TEST1, TEST0, D.GND, TSTB, /TSCK, TSY, TSO, PACK, D.VDD; AGCI, RFO, EQ2, EQ1, RF-, A.GND, A, C, B, D, F, E, A.VDD, REFOUT, FE-, FEO, TE-, TEO, TE2, TEC, A.GND, PD, LD, PN, A.VDD; C2D3, C2D2, C2D1, C1D2, C1D1, D.GND, PLCK, MIRR/WFCK, RFCK, LOCK, D.VDD, LIMIT, C16M, D.GND, TX, HOLD/WDCK, LRCK, LRCKIN, SCKO, SCKIN, DOUT, DIN, FLAG, EMPH, D.VDD

2V/DIV,20µS/DIV; 2V/DIV,10µS/DIV; 2V/DIV,0.5µS/DIV; 2V/DIV,5mS/DIV; 2V/DIV,20mS/DIV; 1V/DIV,5µS/DIV

CN1: 1 SW1, 2 SW2, 3 /XTALEN, 4 LIMIT SW, 5 LOCK, 6 RFOK, 7 /RST, 8 AC, 9 /STB, 10 /SCK, 11 DSP_SO, 12 DSP_SI, 13 8V, 14 8V, 15 M-GND, 16 M-GND, 17 5V, 18 5V, 19 Lch, 20 A-GND, 21 DSP-GND, 22 Rch

To 7201-02-11A CN681

The following symbols are shown on the schematic diagram.

| | |
|---|---|
| 7V | 7V |
| 5V | 5V |
| ⇦ | AUDIO(L,R) |

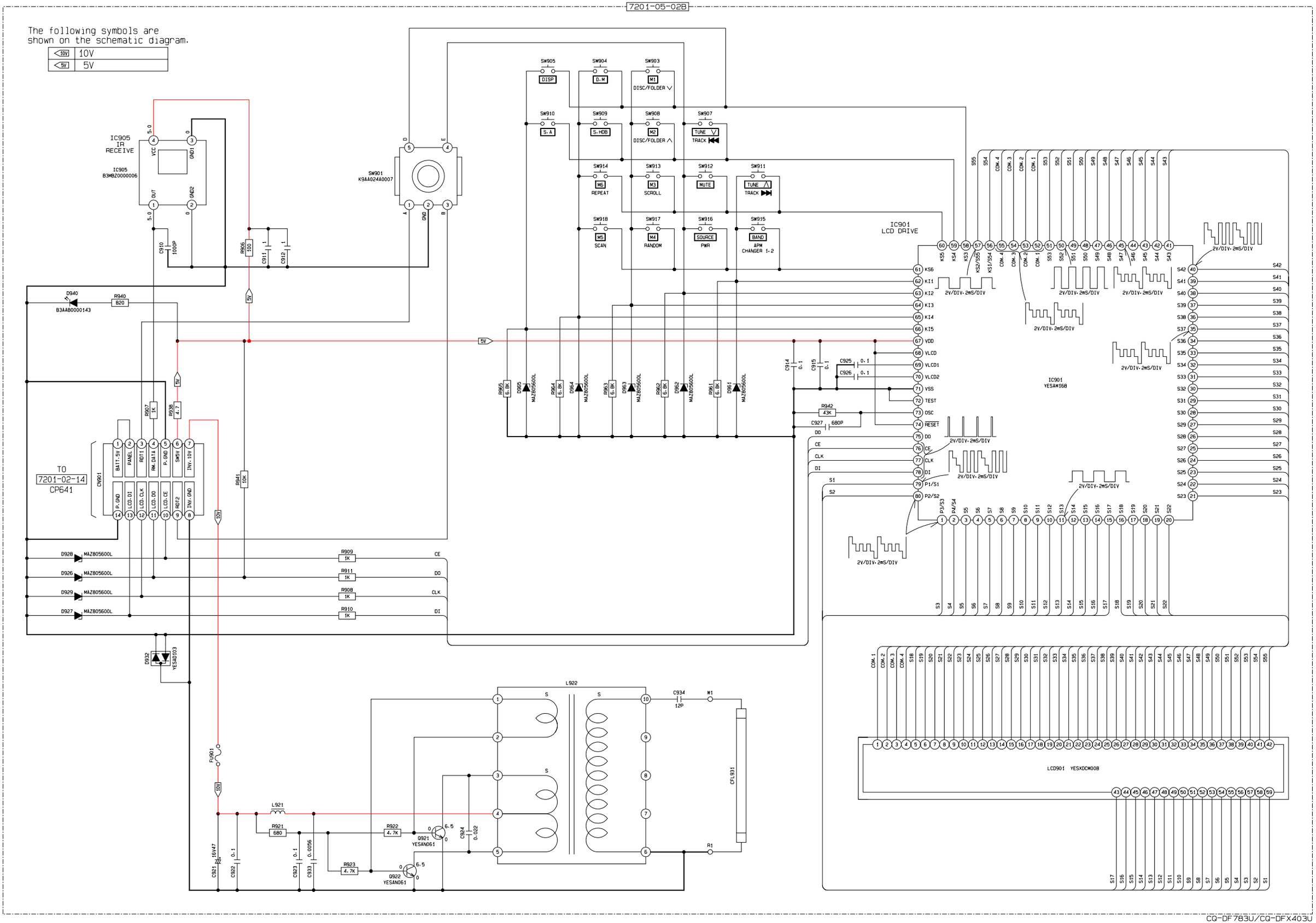
The following symbols are
shown on the schematic diagram.
10V
5V
IC905
IR
RECEIVE
IC905
B3MBZ0000006
SW901
K9AA024A0007
IC901
LCD DRIVE
IC901
YESAM168
LCD901 YESXDCM008
TO
7201-02-14
CP641
CN901
L922
CFL931
Q921
YESAN061
Q922
YESAN061
2V/DIV·2mS/DIV

The following symbols are shown on the schematic diagram.

| | |
|---|---|
| 10V | 10V |
| 5V | 5V |

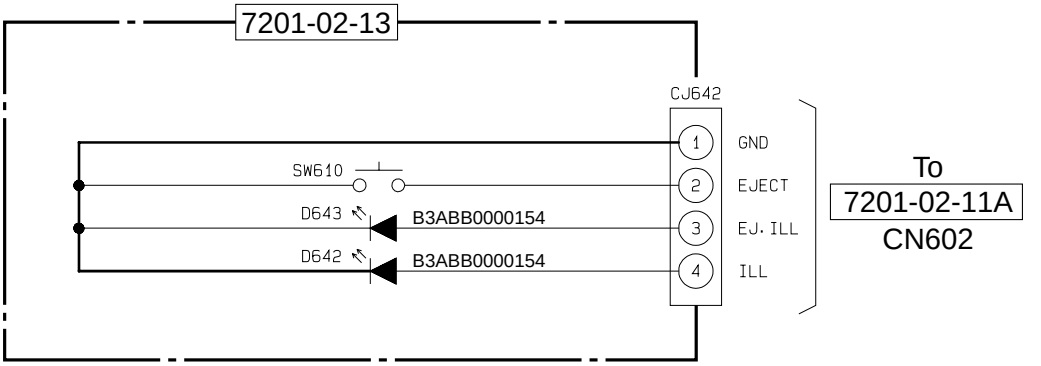


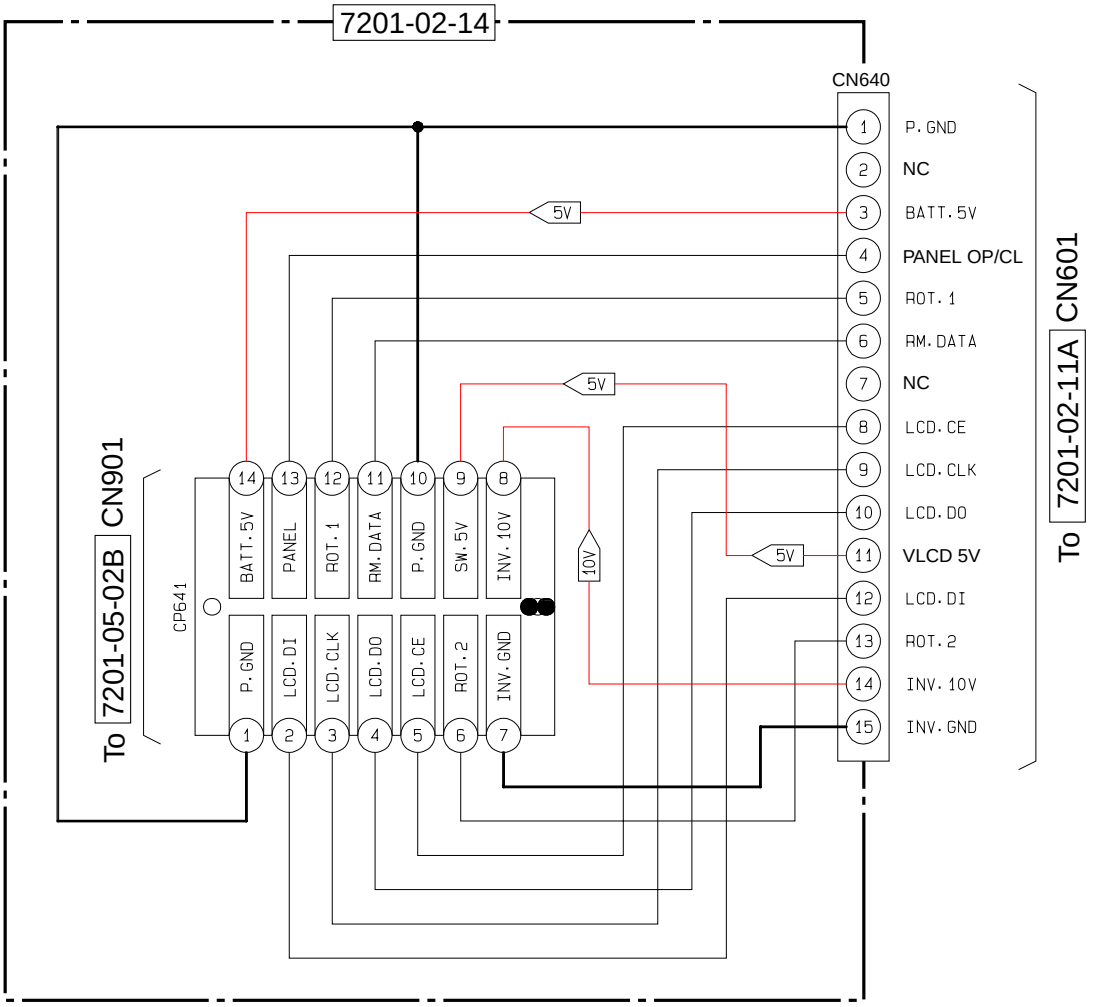

To
7201-02-11A
CN681

3032-14-02

CN101
CDRST
CD MUTE
CD CDFS
CD SCK
CD SO
CD SI
DC8V
DC8V
GND(M)
GND(M)
CD3.3V
CD3.3V
Lch
GND(A)
GND
Rch

R137 1k
R138 1k
R139 1k
R140 1k
R141 1k
R142 1k
8V
GND(M)
VDD3.3V
Lch
GND
Rch

RESET
MUTE
CDFS
SCK
SO
SI

L302 0
8V
L403 10u
3.3V
GND
VDD3.3V
TP153 SYS3.3V

System => MP3 DSP
CDFS
SCK
SO
SI
MUTE
RESET

SW2
SW1
RESTSW

MLD
MDATA
MCLK
/RST
BLKCK
STAT
SQCK
SUBQ

CLK2

MP3 DSP => CD DSP Audio Data
DATA_M_C
LRCK_M_C
CLK_M_C

CD DSP => MP3 DSP Audio Data
DATA_C_M
LRCK_C_M
CLK_C_M

TP106 RCH
TP107 GND(A)
TP108 LCH
R
L

C360 10uF/16V
C321 0.1u
R305 220
R315 220
IC204A C0ABBB000073
IC204B C0ABBB000073
R304 10K
R314 10K
C301 1000p
C311 1000p
R302 3.9k
R312 3.9k
C302 1000p
C312 1000p
R303 15K
R313 15K
C356 22uF/6.3V
C358 22uF/6.3V
R301 3.9k
R311 3.9k
R324 100k
R325 100k
R322 10k
R323 10k
R327 10k
R328 10k
C137 1u
C138 1u

R329 1k
C359 100uF/16V
Q203 YESAN060

JP101 SHORT
JP102 SHORT
AnalogGND
Digital GND
C121 0.1u
C357 47uF/6.3V

TP138 TP
C135 0.1u
C154 220uF/10V
R119 1k

L303 0
L301 100u
R326 100

C132 0.1u
C139 0.1u

R131 2.2k
R136 2.2k
R133 2.2k

R202 0
R201 6.8k
TVD
TP149 TVD

TP150 ECS
R205 0
R204 1k
ECS
R206 18k
ECM
TP155 ECM

YESAM166
CH1 Spindle Motor
CH2 Feed Motor
CH3 Loading Motor (Not use)
CH4 Focus Coil
CH5 Tracking Coil

IC203 YESAM166
14 SP(-) 4.0
13 SP(+) 4.6
12 SL(+) 4.3
11 SL(-) 4.4
10
9
8 8.4
VO1(+) VO1(-) VO2(+) VO2(-) VO3(+) VO3(-) Vcc
7 1.6
6 1.6
5 3.3
4 0
3 1.6
2 8.4
1
VIN3 VIN2 VIN1 MUTE2 MUTE1 BIAS RVcc
VO5(-) VO5(+) VO4(-) VO4(+) GND PVcc12 PVcc45
4.3 15 T- 16 T+ 17 F- 18 F+ 19 0 20 8.4 21 8.4
1.6 22 1.6 23 0 24 25 26 1.8 27 7.8 28
VIN4 VIN5 RGND RE1 RE2 RE O1 RE O2

LN9 SL(-)
LN8 SL(+) C207 0.1u
LN7 RESTSW
LN6 GND(M)
LN5 SW1
LN4 SW2
LN3 GND(M)
LN2 SP(-)
LN1 SP(+)

C253 220uF/10V
C251 220uF/10V
C205 0.1u
C252 47uF/6.3V
R211 27k
R212 47k
C208 22p
7.8
8.4
3.2 Q201 B1BDBC000001

TP157 GND(M)
TP156 KICK
R129 6.8k
KICK
R208 0
R207 5.1k
TRD
TP151 TRD
C203 3300p
C204 3300p
R209 5.1k
FOD
R210 0
TP152 FOD
C141 0.1u

3.3V
TP118 DSP3.3V
L304 0
TP158 3.3V(D)

Q101 B1BDBC000001
TP159 3.3V(A)
R101 4.7
L305 0
1.8
3.1
2.4
C151 10uF/16V

CN102
1 VCC
2 F
3 E
4 LD
5 LD G
6 GND
7 A
8 GND
9 B
10 Vref
11 LPD
12 GND
13 T-
14 T+
15 F-
16 F+
R114 0
R116 2.2k
R115 2.2k
PD
NA
NB
R117 0
LD

Optical Pick-up Ass'y

TP111 RFO
TP112 RFIN
IC202 YESAM163
PD 0 1
LD 2.4 2
VCC 3.2 3
RFN 1.6 4
RFOUT 1.2 5
RFIN 2.5 6
CAGC 1.3 7
ARF 1.6 8
CEA 1.6 9
RFENV 1.6 10
3TOUT 2.3 11
CBDO 2.3 11
BDO 0 12
COFTR 2.2 13
OFTR 0 14
NRFDET 0 15
GND 0 16
A 32 1.8 NB
C 31 1.8
B 30 1.8 NA
D 29 1.8
F 28 1.6 F
E 27 1.6 E
TBAL 26 1.6
FBAL 25 1.6
GCTL 24 2.1
FEOUT 23 1.6
FEN 22 1.6
TEN 21 1.6
TEOUT 20 1.6
TEBPF 19 1.6
VDET 18 0
Vref 17 1.6

R104 470
R105 2.7k
R103 1.5k
C102 0.1u
C101 220p
C104 0.047u
C105 4700p
C106 1000p
C107 0.047u
C108 330p
C109 0.1u
C140 0.1u
C152 22uF/6.3V
C103 0.1u
C153 22uF/6.3V
C110 0.1u

TP116 FBAL
TP115 TBAL
R113 120k
R112 240k
R111 18k
TP105 FE
TP104 TE
R110 10k
C114 1000p
C112 2200p
C113 1500p
R109 150k
R108 390k
C111 0.022u
C136 0.1u
R130 1M
R120 0
C116 0.1u
C115 0.1u
TP102 Vref
R107 2.7k
TP113 GCTR
R106 10k
R118 15k

TRV 0 21
TVD 1.6 22
PC 23
ECM 1.6 24
ECS 1.6 25
KICK 1.6 26
TRD 1.6 27
FOD 1.7 28
Vref 1.6 29
FBAL 1.3 30
TBAL 1.5 31
FE 1.6 32
TE 1.6 33
RFENV 1.6 34
VDET 0 35
OFT 0 36
TRCRS 1.5 37
/RFDET 0 38
BDO 0 39
LDON 3.1 40

PMCKPLAY SMCK /RST STAT DMUTE SUBQ SQCK BLKCK /TLOCK /FLOCK SENSE MLD MDATA MCLK TX DVss1 DVdd1 SRDATA LRCK BCLK
20 19 18 3.3 17 0 16 0 15 0 14 3.3 13 12 11 0 10 3.2 9 3.2 8 3.2 7 6 5 0 4 3.2 3 1.6 2 1.6 1 1.6
SSEL 80 1.6 CLK_M_C
MSEL 79 1.6 LRCK_M_C
PSEL 78 1.6 DATA_M_C
CSEL 77 0
RSEL/GIO3 76 0.5
OUTR 75 1.5
OUTL 74 0
AVdd1 73 3.0
/TEST 72 3.2
IOSEL 71 0
RESY/FLAG6 69
DEMPH 68
CRC 67
CLVS 66
FLAG 65
iPFLAG 64
GIO2/FCLK 63 0
GIO1/CLDCK 62
BYTCK/TRVSTP 61

IC201
MN6627482WB

PLLF2 TOFS WVEL ARF Iref DRF DSLF PLLF VCOF AVdd2 AVss2 EFMCK384 EFMDSLB VCOF2 SUBC SBCK Vss X1 X2 Vdd
0 41 42 43 44 1.6 45 46 1.0 47 1.1 48 0 49 3.2 50 0 51 52 53 54 55 3.2 56 0 57 1.5 58 59 3.2 60

TP154 NRFDET
TP101 ARF
C122 1000p
R122 56k
R123 120k
C123 0.022u
R121 220k
C121 0.1u
C124 1000p
C125 1000p
R125 470
C127 1000p
R126 2.7k
C126 1u
C128 0.22u
C129 0.1u
C130 1000p
R128 220
C131 0.1u
R127 220k

TP103 GND

The following symbols are shown on the schematic diagram.

| | |
|---|---|
| 8V | 8V |
| 3.3V | 3.3V |
| | AUDIO(L,R) |

CLK_M_C <=> SSEL
LRCK_M_C <=> MSEL
DATA_M_C <=> PSEL

CLK_C_M <=> BCLK
LRCK_C_M <=> LRCK
DATA_C_M <=> SRDATA

TP415
3.3V(RAM)
L401 10u
GND
VDD3.3V
C437 1u
C418 0.1u
C452 10uF/16V
C414 0.1u
System => MP3 DSP
CDFS
SCK
SO
SI
MUTE
RESET
R434 100k
R435 4.7k
R416 47k
R415 47k
R414 47k
L402 10u
C464 47uF/6.3V
SW2
SW1
RESTSW
R483 2.2k
R482 2.2k
IC406
YESAM171
R480 56
R478 56
IC402
YESAM172
FLASH
R/W
nMSTRB
C413 0.1u
C412 0.1u
C411 0.1u
C410 0.1u
TP401
CVDD
C463 47uF/6.3V
C433 1u
IC411
YESAM178
Vin
Vo
GND
Cont.
Noise
C434 1u
C435 0.1u
TP412
A20
TP411
A19
TP413
A21
MLD
MDATA
MCLK
/RST
BLKCK
STAT
SQCK
SUBQ
RA401 56
RA402 56
RA403 56
RA404 56
RA405 56
RA406 56
RA407 56
RA408 56
RA409 56
RA410 56
TP414
A22
C401 0.1u
C402 0u
C403 0u
IC401
YESAM176
CLK2
MP3 DSP => CD DSP Audio Data
DATA_M_C
LRCK_M_C
CLK_M_C
CD DSP => MP3 DSP Audio Data
DATA_C_M
LRCK_C_M
CLK_C_M
R401 10k
R413 56
R402 10k
R403 10k
nPS
R/W
nMSTRB
MUTE
SUBQ
2V/DIV,10µS/DIV
2V/DIV,10mS/DIV
2V/DIV,0.2µS/DIV
2V/DIV,50mS/DIV
2V/DIV,50mS/DIV
2V/DIV,5mS/DIV
3V
CLK_M_C <=> SSEL
LRCK_M_C <=> MSEL
DATA_M_C <=> PSEL
CLK_C_M <=> BCLK
LRCK_C_M <=> LRCK
DATA_C_M <=> SRDATA
SCK
CDFS
RESTSW
C406 0.1u
C405 0.1u
C407 0.1u
C408 0.1u
C409 0.1u
C436 0.1u
C426 0.1u
RA414 100
RA412 100
R425 100
X401
YESXL018
IC409
YESAM167
R430 560
R431 4.7k
R432 10k
R429 220
R428 33
R404 10k
R408 4.7k
R409 4.7k
R481 4.7k
TP402 TMS
TP403 TCK
TP404 TRST
TP405 TDI
TP406 TDO
TP407 EMU
TP408 EMU0
TP409 VDD3.3V
TP410 GND

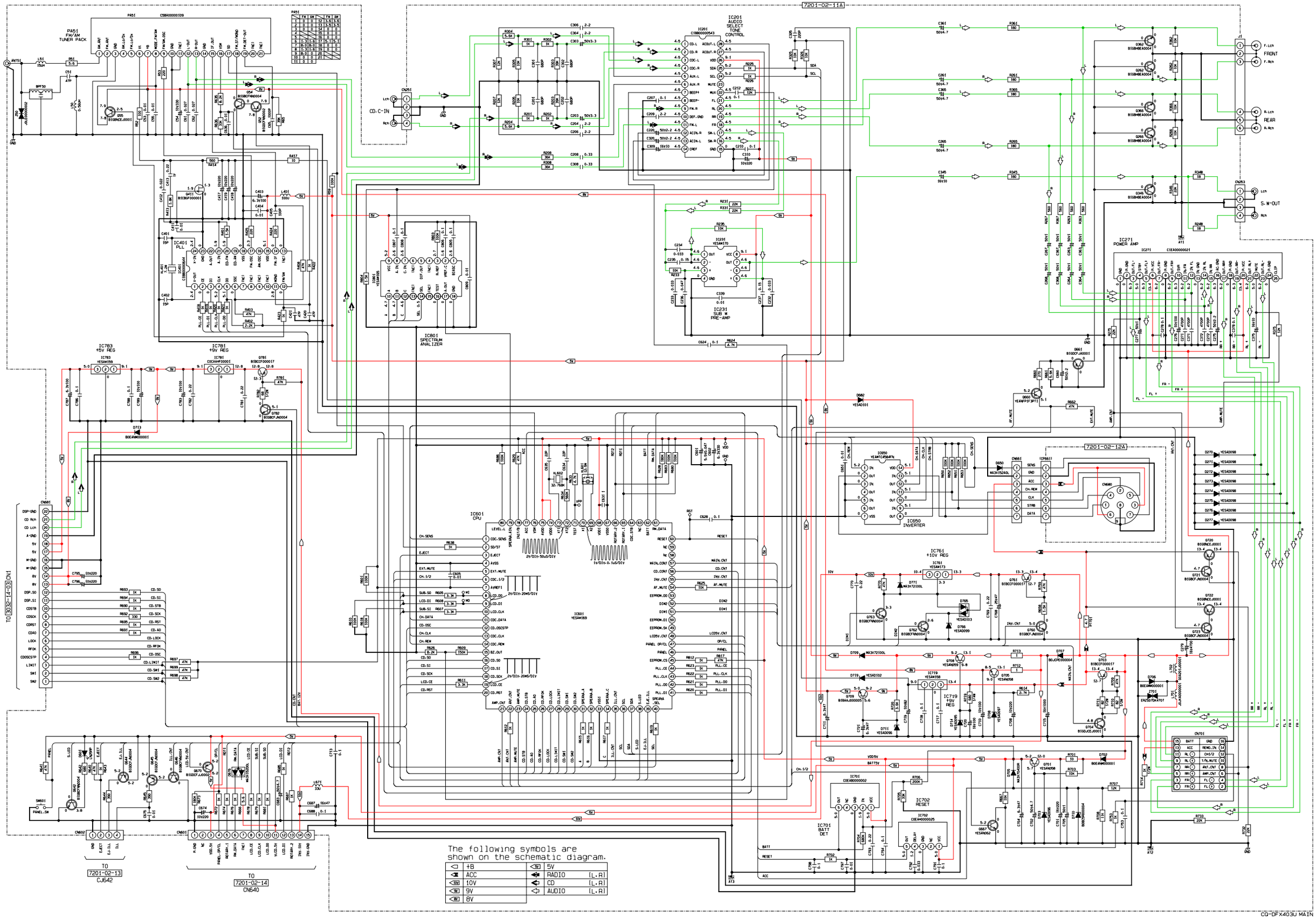


The following symbols are shown on the schematic diagram.

| | | | |
|---|---|---|---|
| ◁ | +B | 5V | 5V |
| ◁ | ACC | RADIO | (L.R) |
| 10V | 10V | CD | (L.R) |
| 9V | 9V | AUDIO | (L.R) |
| 8V | 8V | | |

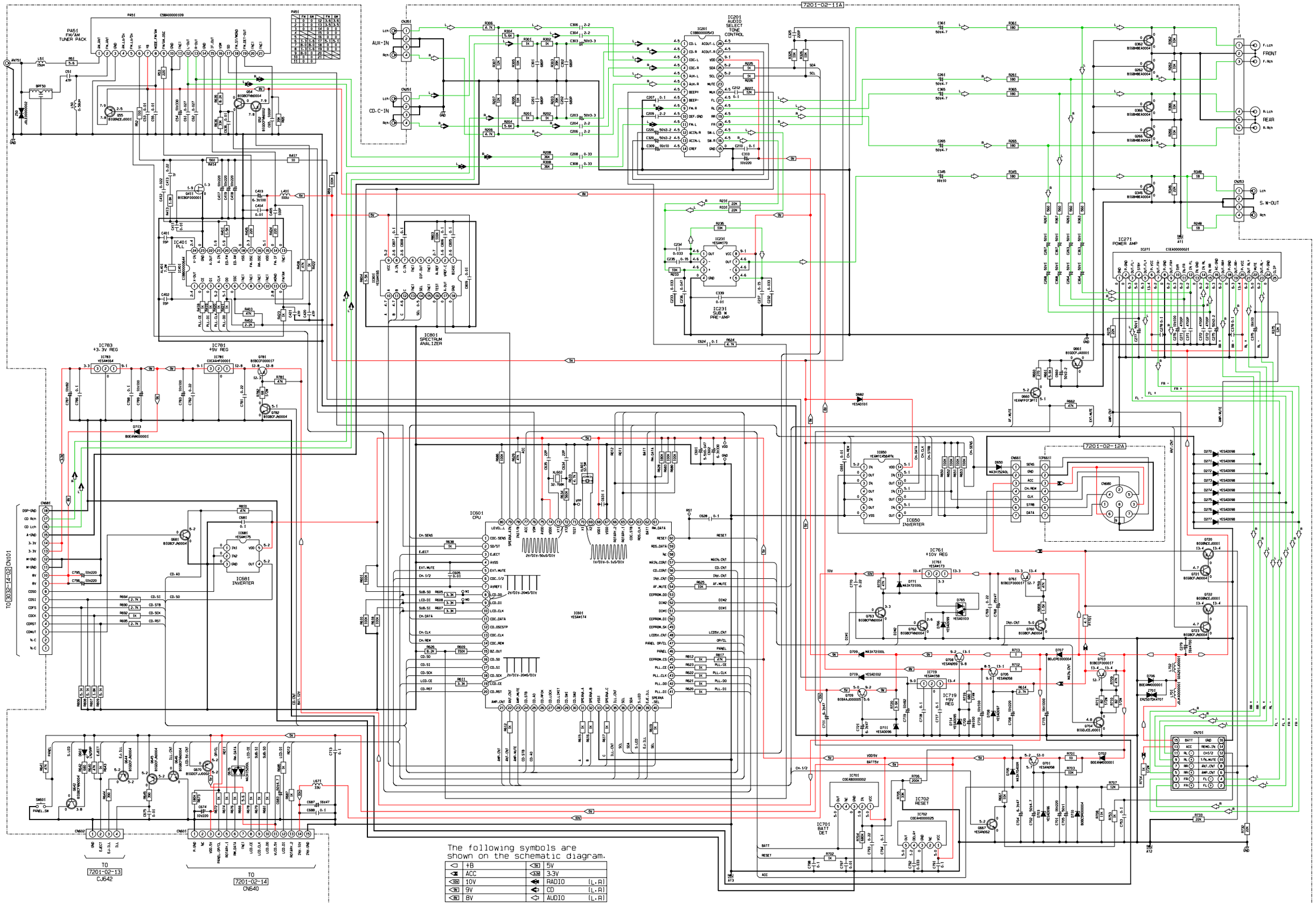


The following symbols are shown on the schematic diagram.

| | | | |
|---|---|---|---|
| ◁ | +B | 5V | |
| ◁ | ACC | 3.3V | |
| 10V | 10V | RADIO | (L.R) |
| 9V | 9V | CD | (L.R) |
| 8V | 8V | AUDIO | (L.R) |

# 22.2. Main Block [CQ-DFX403U]

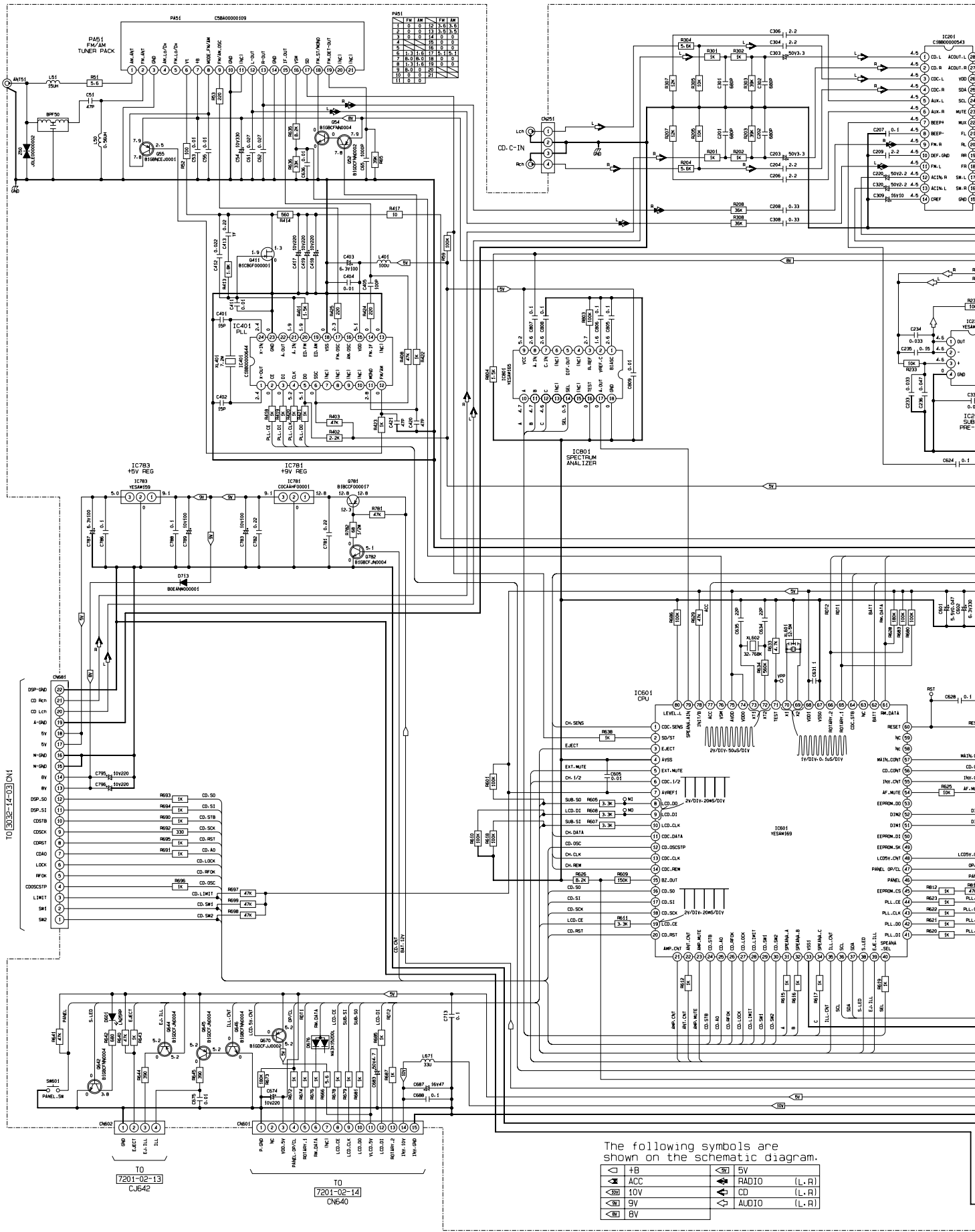

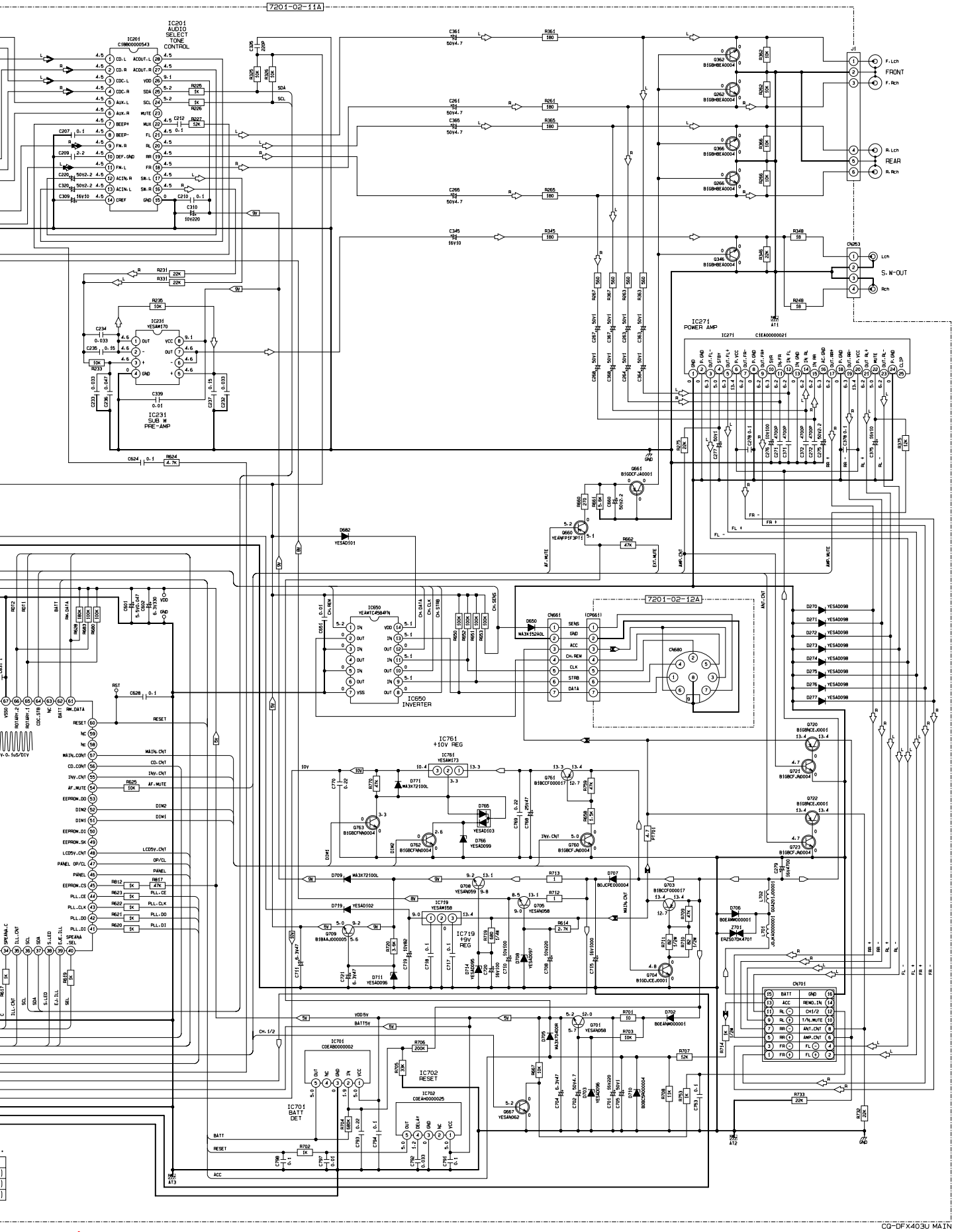
7201-02-11A
IC201
AUDIO
SELECT
TONE
CONTROL
IC231
SUB
PRE-AMP
IC271
POWER AMP
F.Lch
FRONT
F.Rch
R.Lch
REAR
R.Rch
Lch
S.W-OUT
Rch
7201-02-12A
IC650
INVERTER
IC761
+10V REG
IC719
+9V
REG
IC702
RESET
IC701
BATT
DET
CD-DFX403U MAIN

# 22 SCHEMATIC DIAGRAM-2

## 22.1. Main Block [CQ-DF783U]

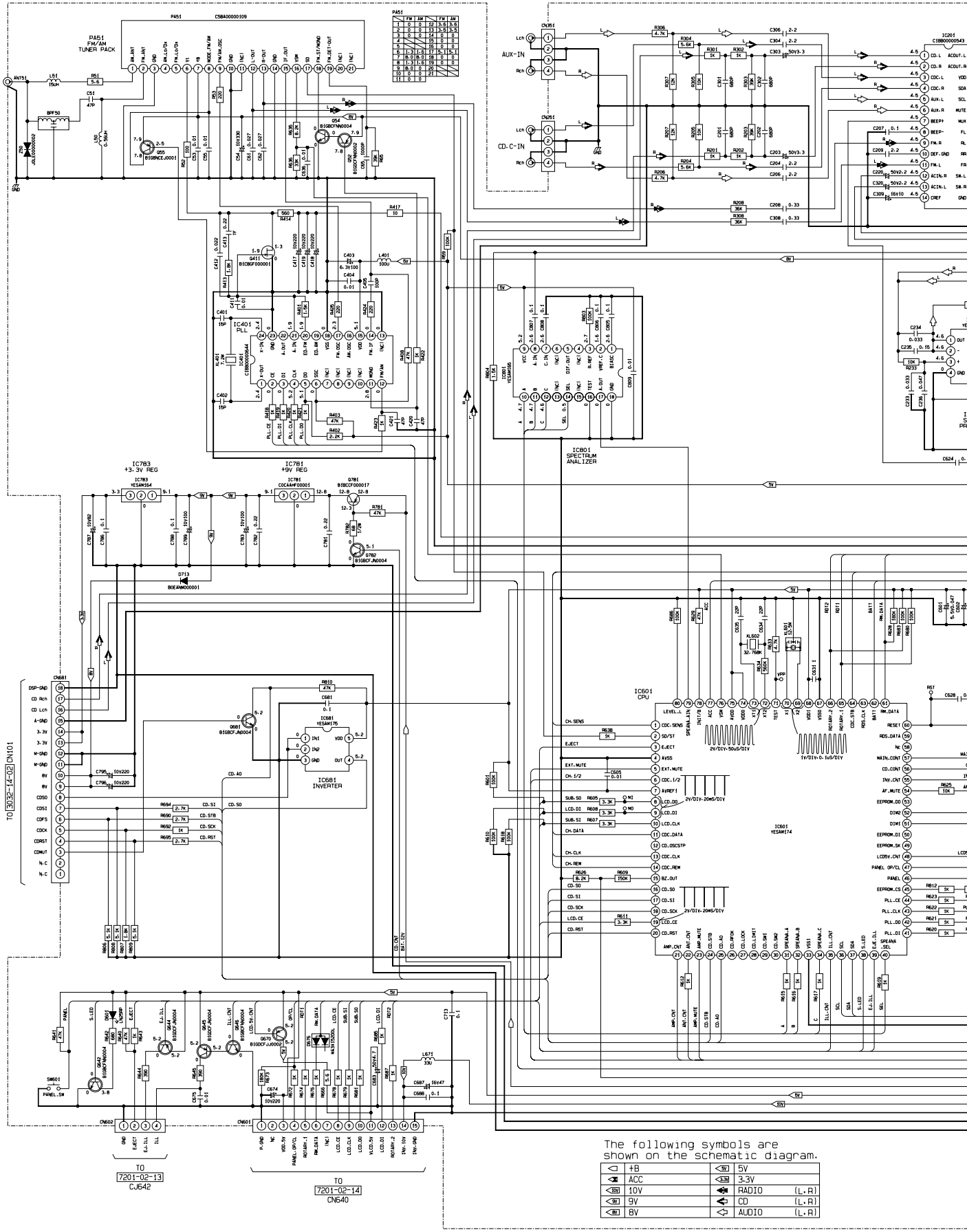

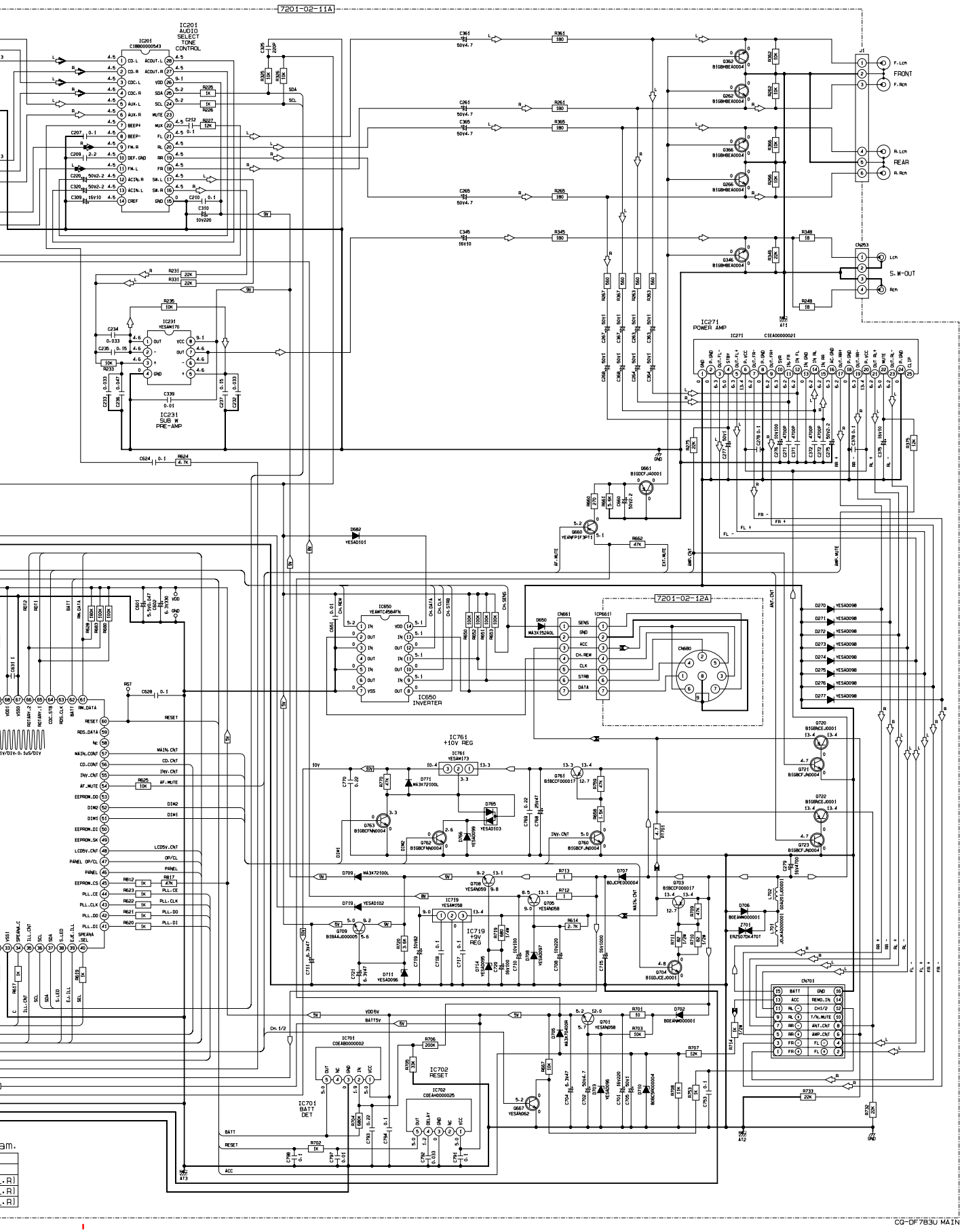


CQ-DF783U MAIN

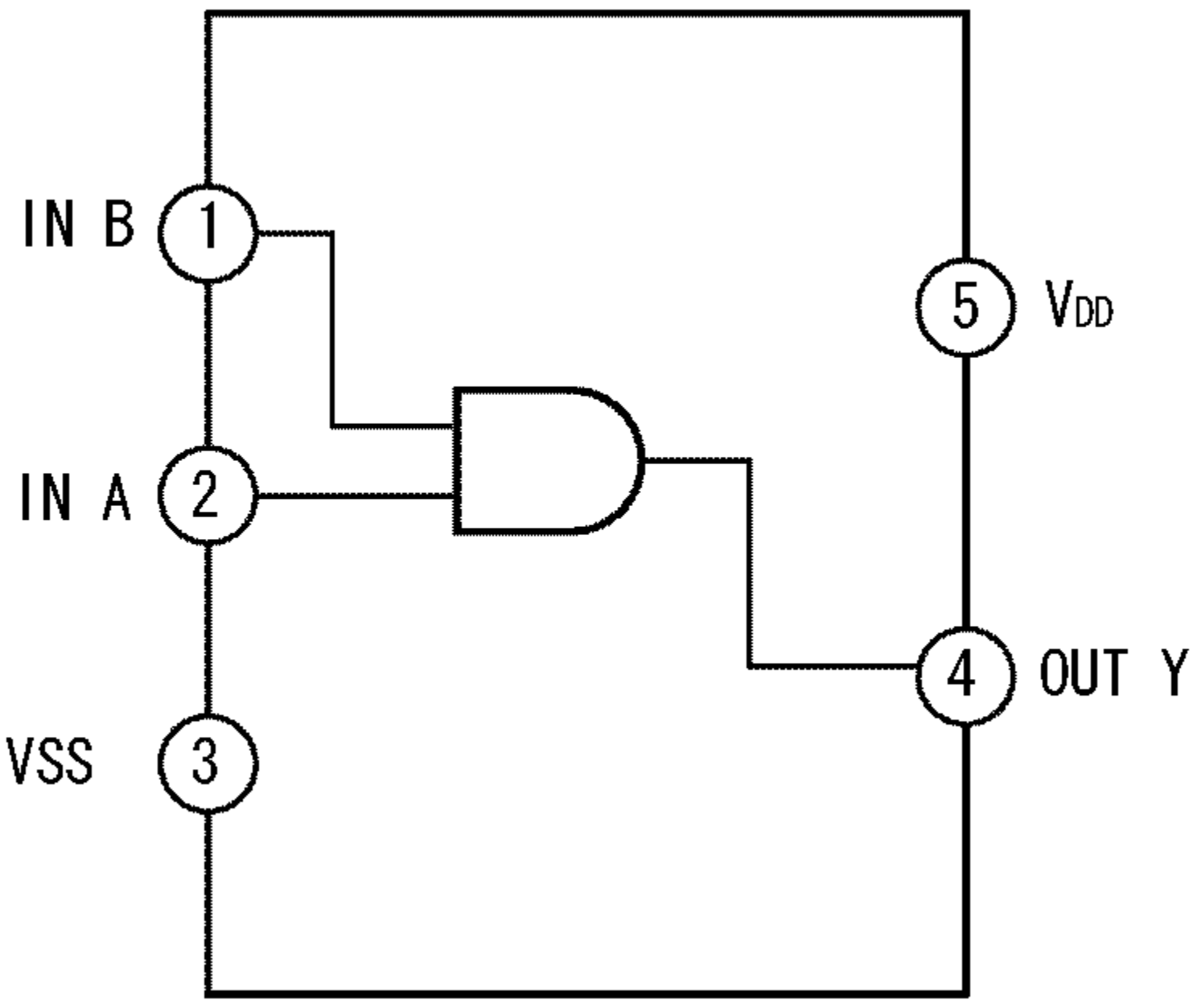
IN B
1
IN A
2
VSS
3
5
VDD
4
OUT Y

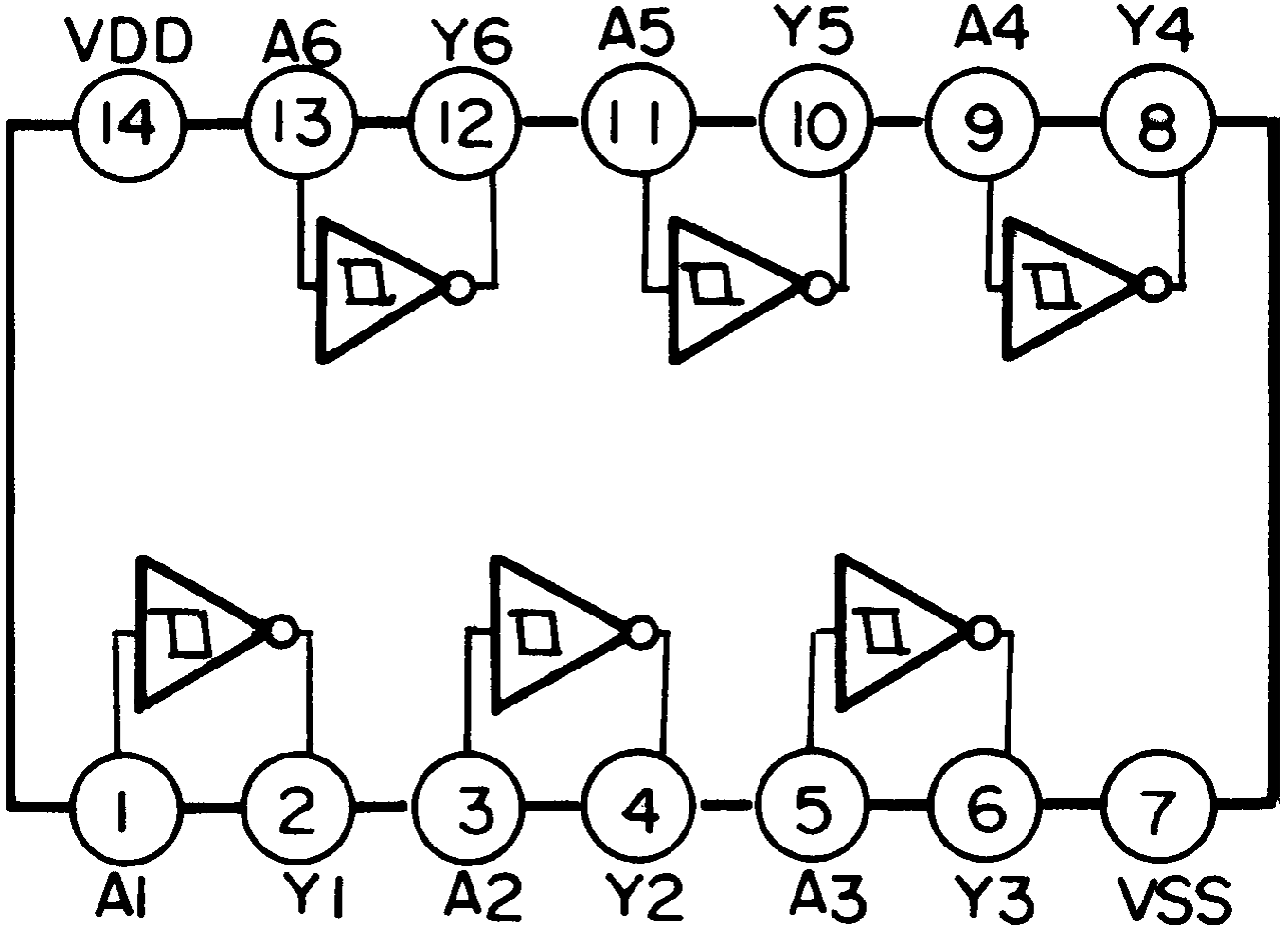
VDD
A6
Y6
A5
Y5
A4
Y4
14
13
12
11
10
9
8
1
2
3
4
5
6
7
A1
Y1
A2
Y2
A3
Y3
VSS

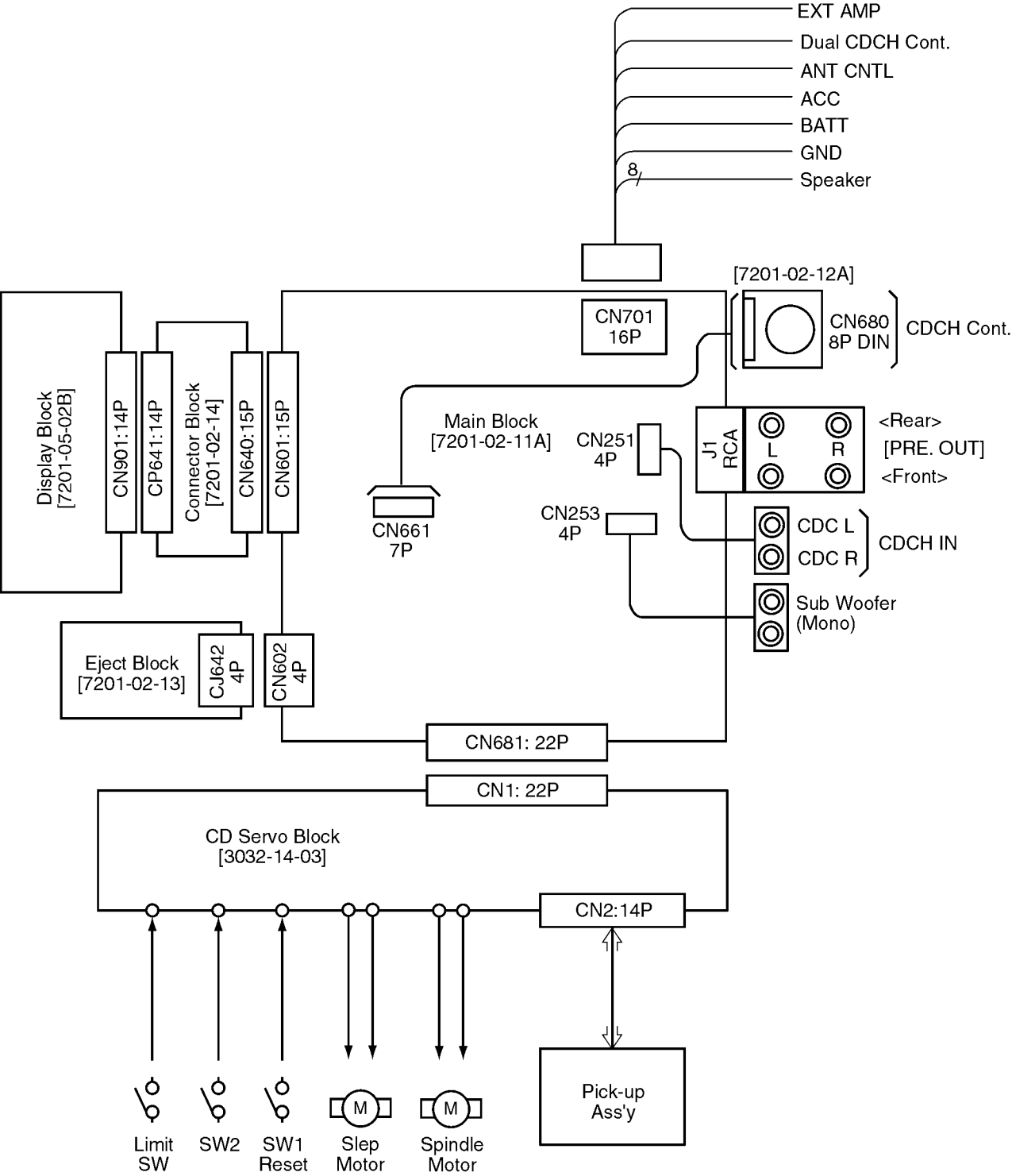
EXT AMP
Dual CDCH Cont.
ANT CNTL
ACC
BATT
GND
8/
Speaker
[7201-02-12A]
CN701
16P
CN680
8P DIN
CDCH Cont.
Display Block
[7201-05-02B]
CN901:14P
CP641:14P
Connector Block
[7201-02-14]
CN640:15P
CN601:15P
Main Block
[7201-02-11A]
CN251
4P
J1
RCA
L
R
<Rear>
[PRE. OUT]
<Front>
CN661
7P
CN253
4P
CDC L
CDC R
CDCH IN
Sub Woofer
(Mono)
Eject Block
[7201-02-13]
CJ642
4P
CN602
4P
CN681: 22P
CN1: 22P
CD Servo Block
[3032-14-03]
CN2:14P
Pick-up
Ass'y
M
M
Limit
SW
SW2
SW1
Reset
Slep
Motor
Spindle
Motor

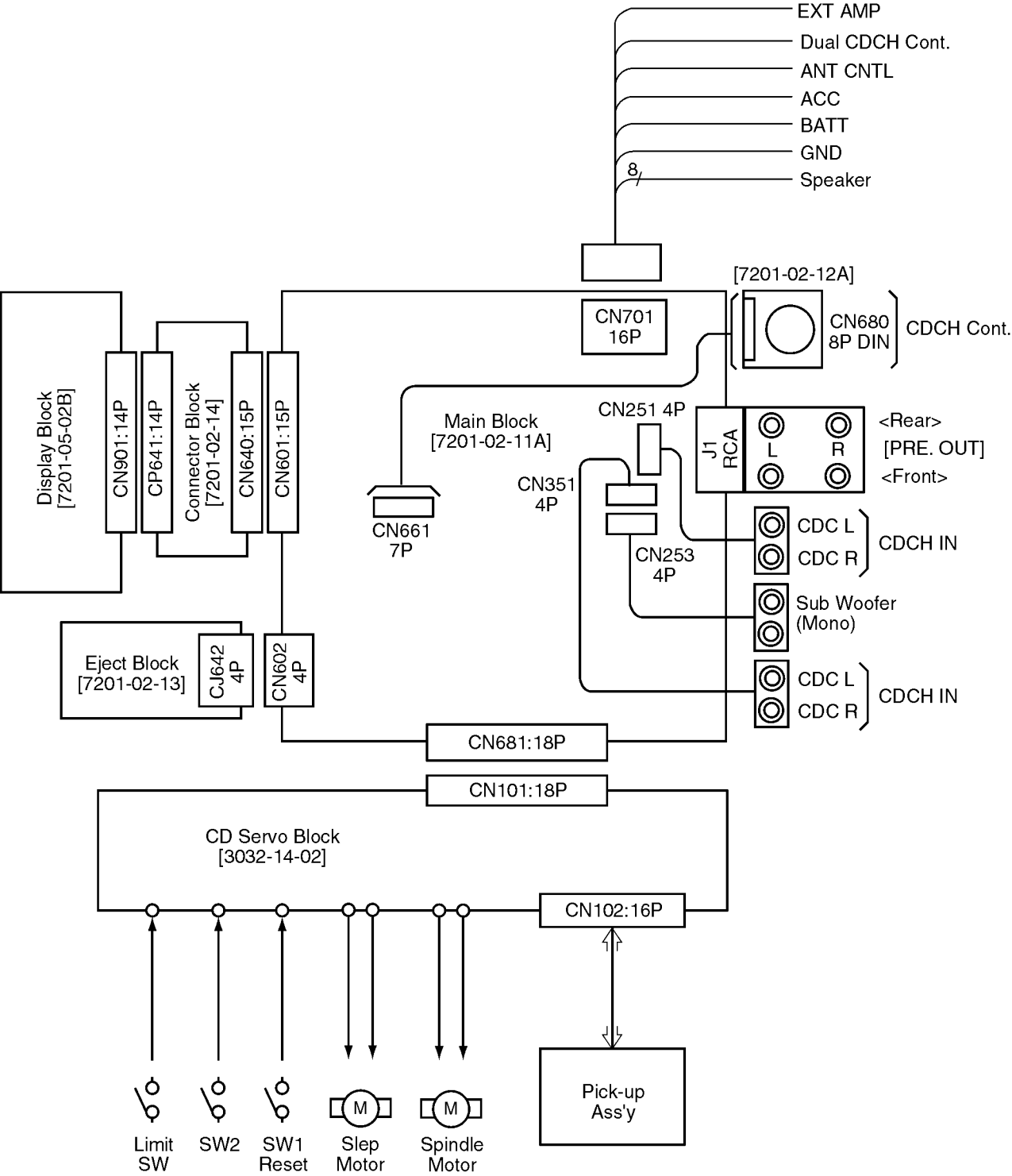
EXT AMP
Dual CDCH Cont.
ANT CNTL
ACC
BATT
GND
8/
Speaker
[7201-02-12A]
CN701
16P
CN680
8P DIN
CDCH Cont.
Display Block
[7201-05-02B]
CN901:14P
CP641:14P
Connector Block
[7201-02-14]
CN640:15P
CN601:15P
Main Block
[7201-02-11A]
CN251 4P
J1
RCA
L
R
<Rear>
[PRE. OUT]
<Front>
CN351
4P
CN661
7P
CN253
4P
CDC L
CDC R
CDCH IN
Sub Woofer
(Mono)
Eject Block
[7201-02-13]
CJ642
4P
CN602
4P
CDC L
CDC R
CDCH IN
CN681:18P
CN101:18P
CD Servo Block
[3032-14-02]
CN102:16P
Pick-up
Ass'y
M
M
Limit
SW
SW2
SW1
Reset
Slep
Motor
Spindle
Motor

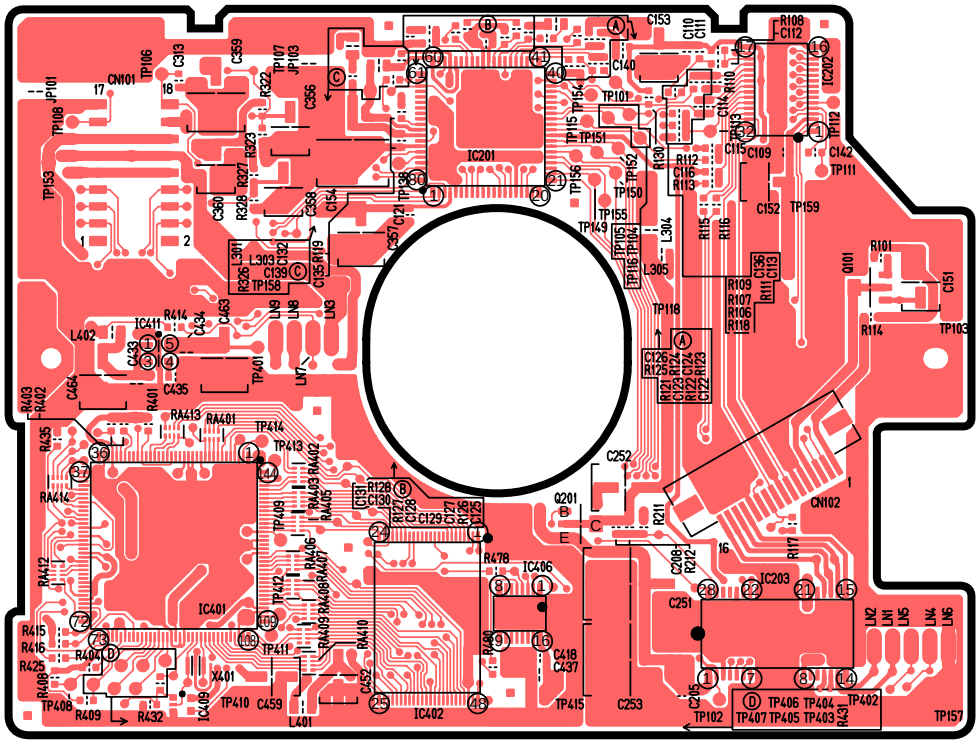

[3032-14-02] [Top View]

[3032-14-02] [Bottom View]

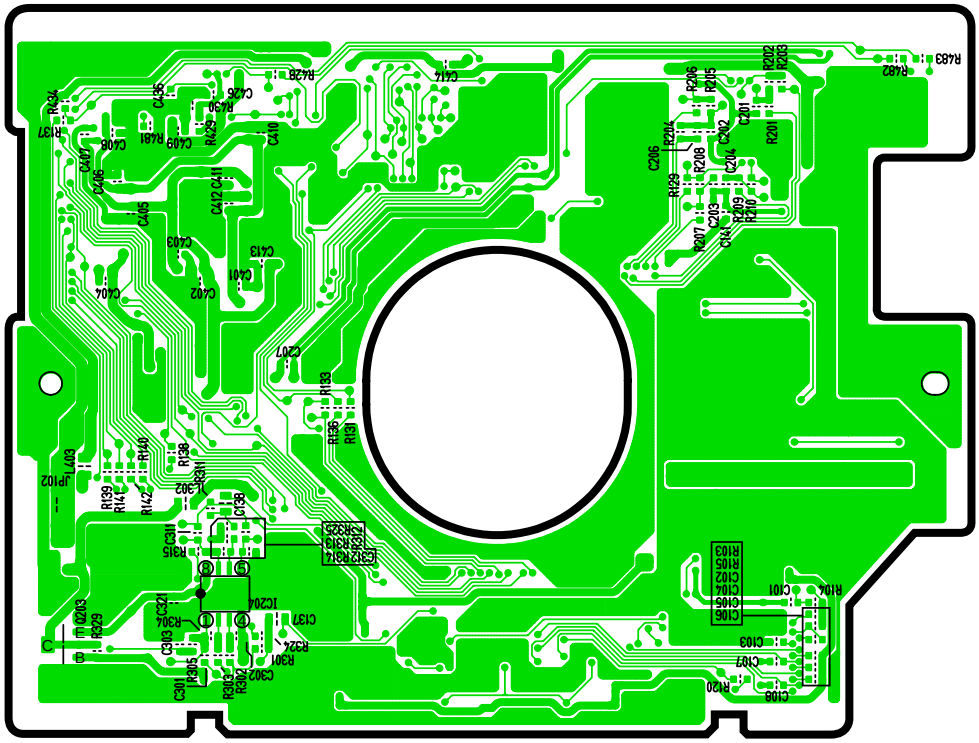

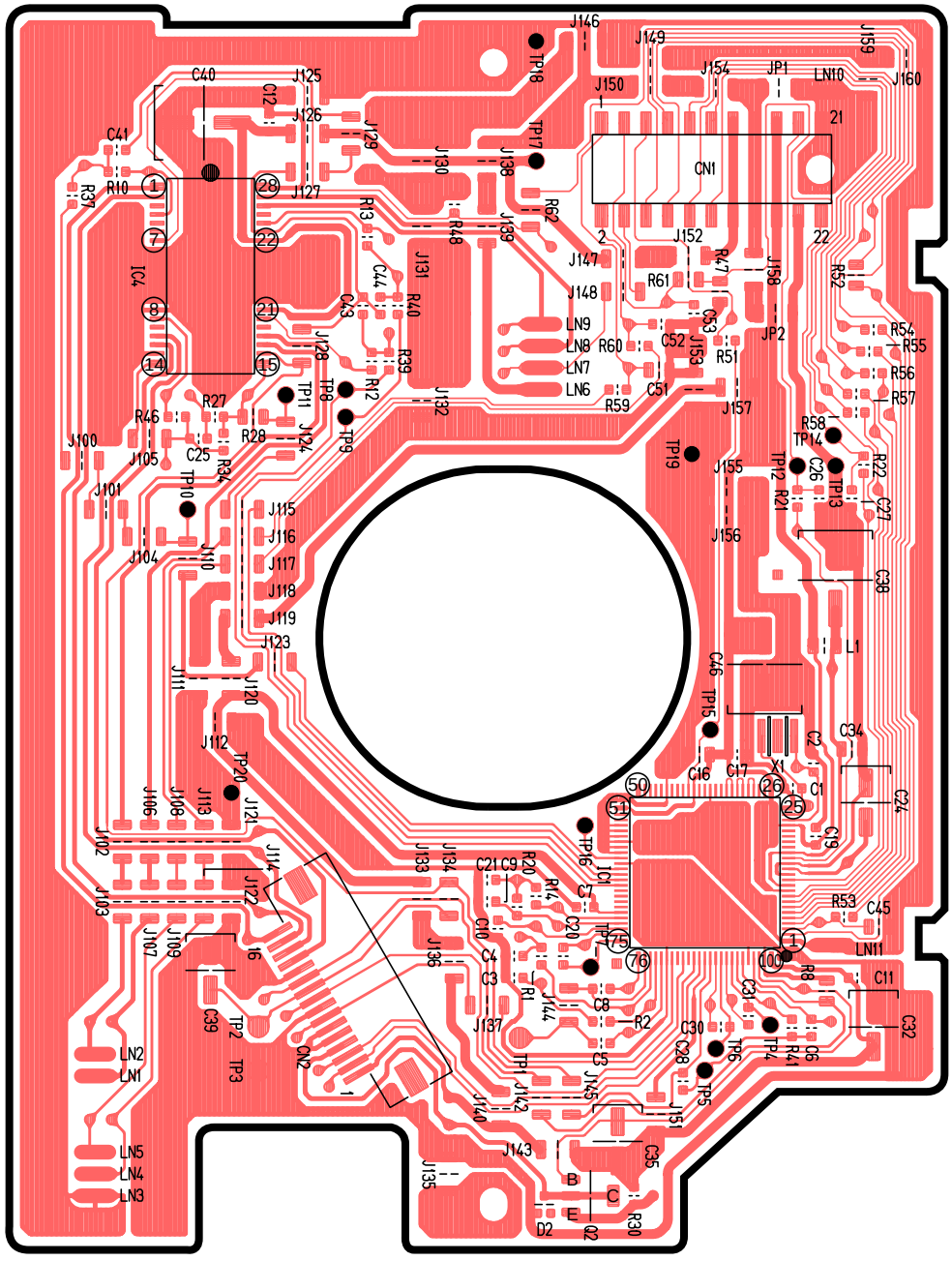

[3032-14-03] [Top View]

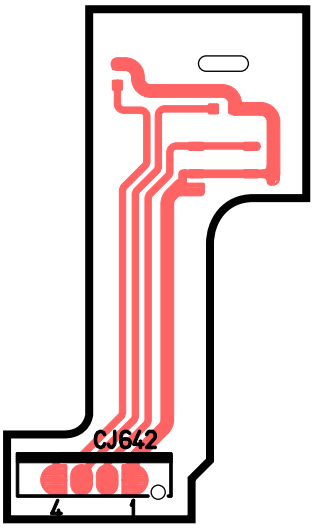


[7201-02-13]
[Top View]

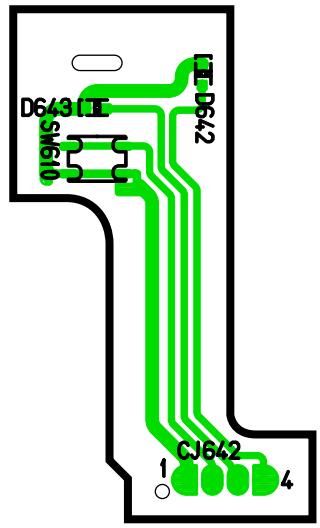


[7201-02-13]
[Bottom View]

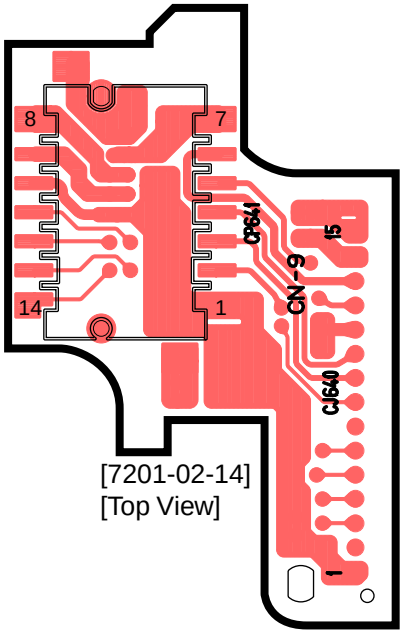


[7201-02-14]
[Top View]

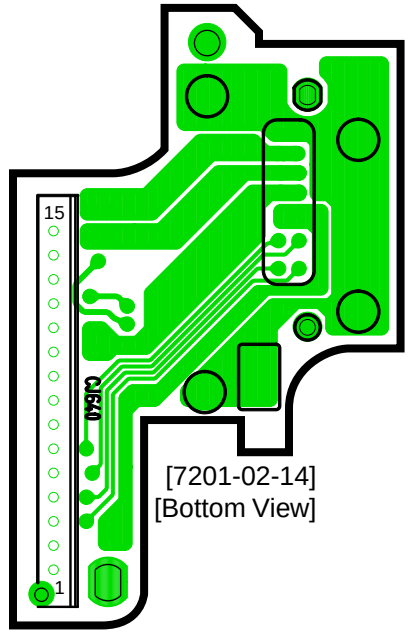


[7201-02-14]
[Bottom View]

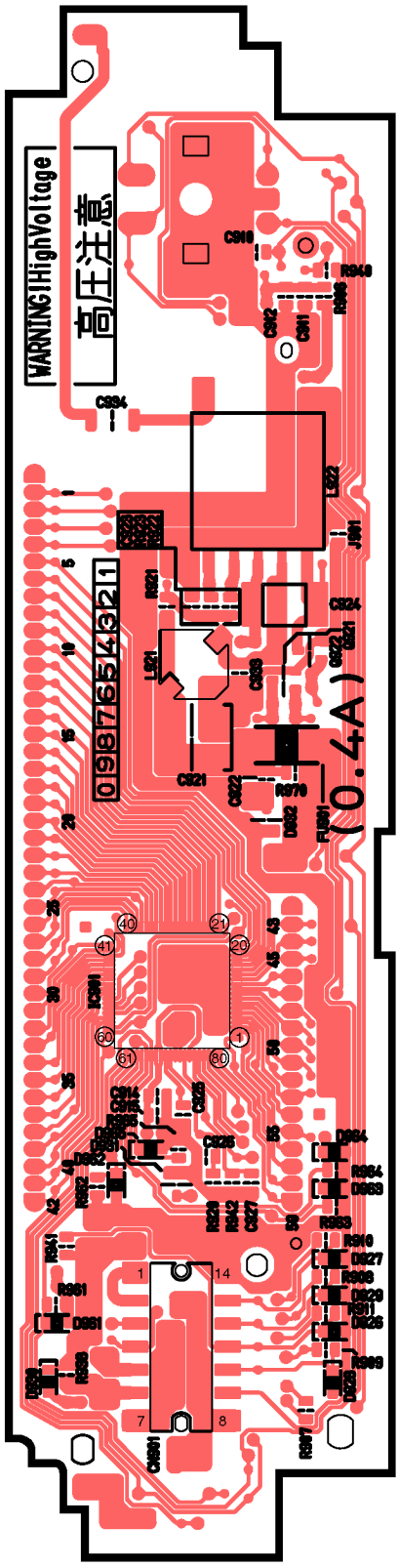


[7201-05-02B] [Top View]

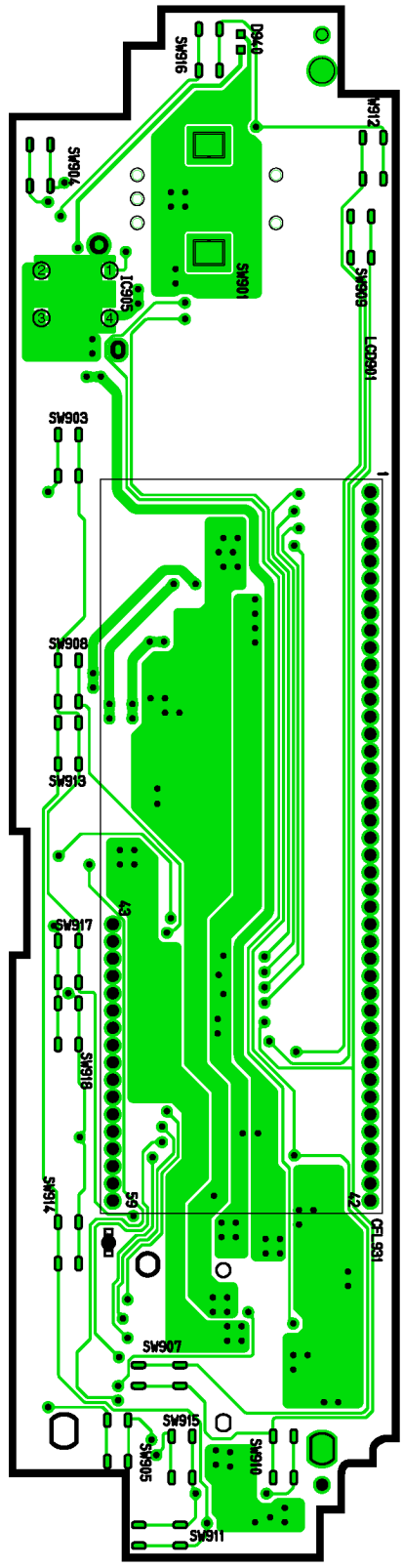

[7201-05-02B] [Bottom View]

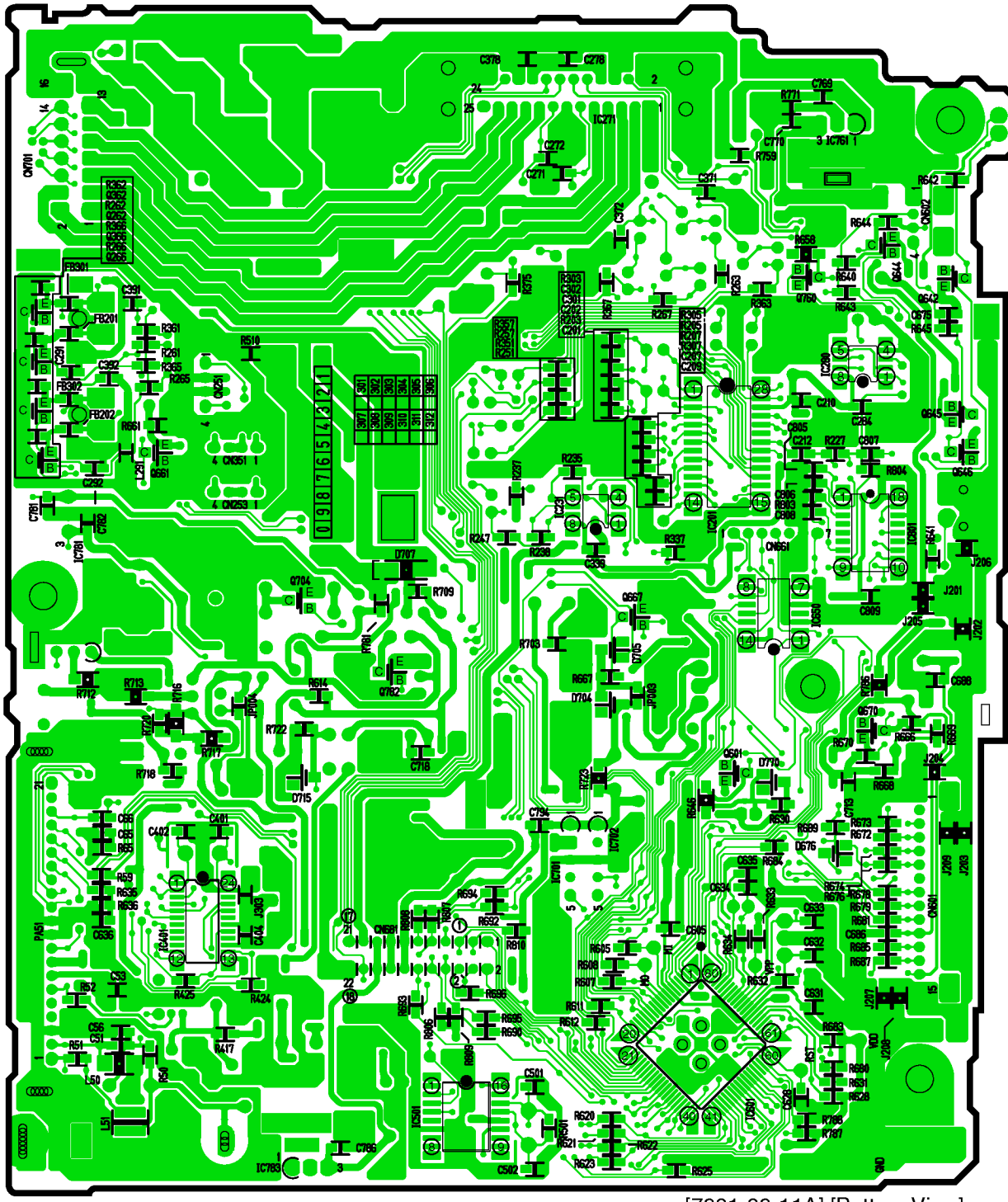

[7201-02-11A] [Bottom View]

[7201-02-12A]
[Bottom View]

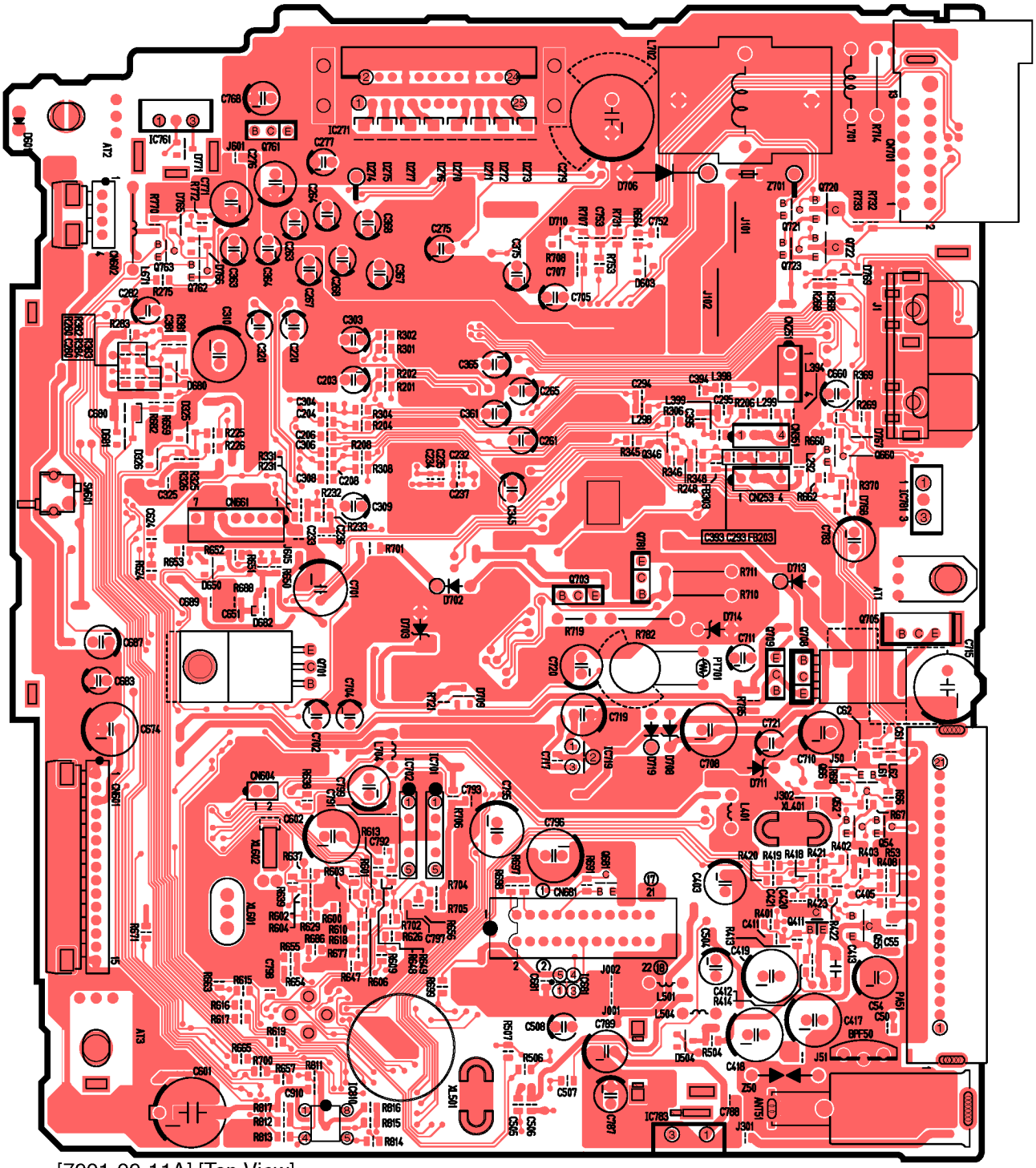

[7201-02-11A] [Top View]

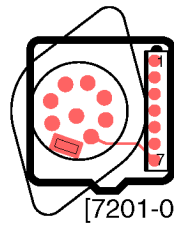

[7201-02-12A]
[Top View]