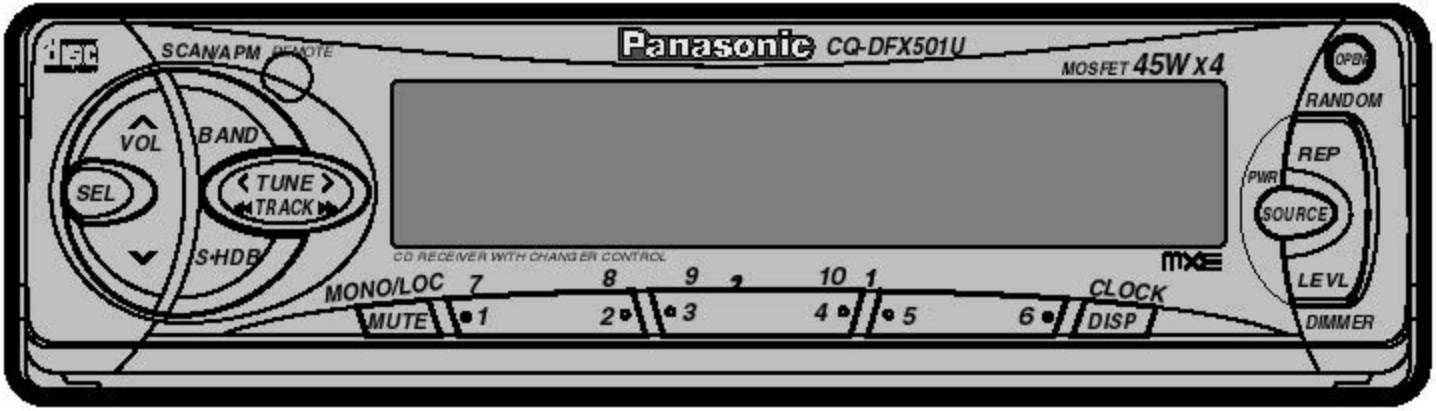
Panasonic CQ-DFX501U
SCAN/APM
REMOTE
MOSFET 45W x4
OPEN
RANDOM
VOL
BAND
SEL
TUNE
TRACK
REP
PWR
SOURCE
S-HDB
CD RECEIVER WITH CHANGER CONTROL
MONO/LOC
7
8
9
10
1
CLOCK
MUTE
1
2
3
4
5
6
DISP
LEVL
DIMMER

<CQ-DFX501U>

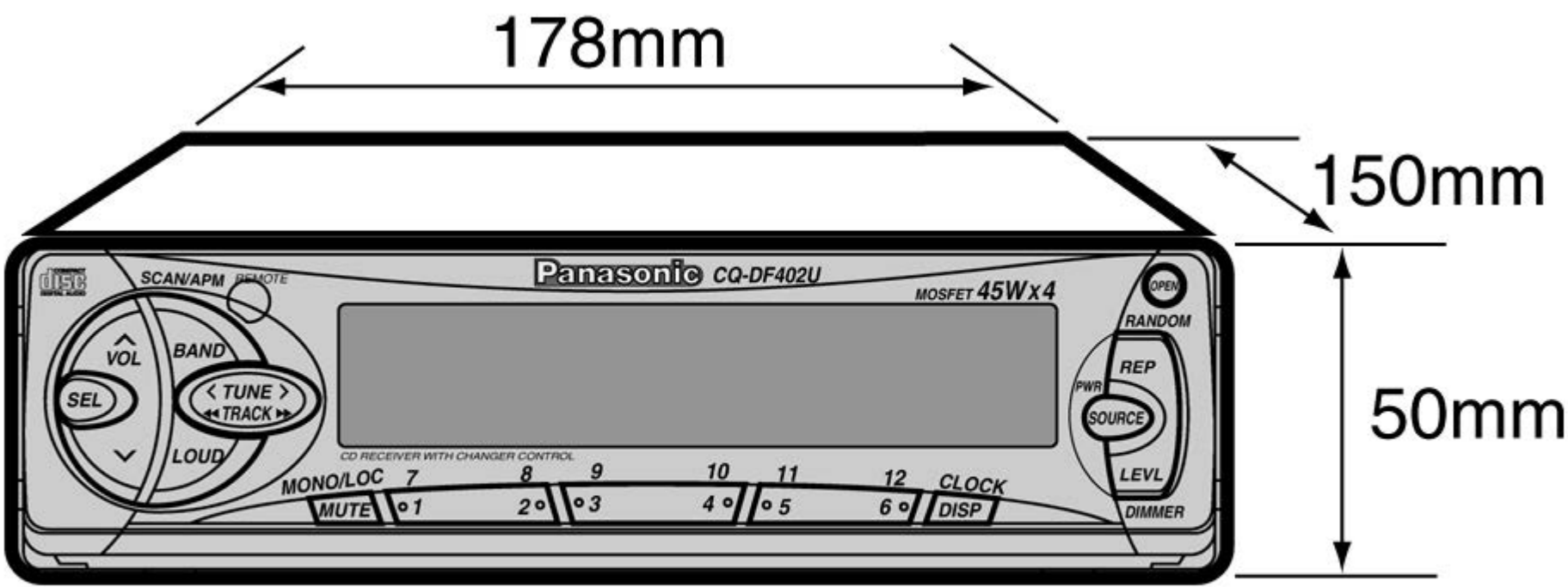
178mm
150mm
50mm
Panasonic CQ-DF402U
MOSFET 45W x 4
SCAN/APM
REMOTE
VOL
BAND
SEL
TUNE
TRACK
LOUD
CD RECEIVER WITH CHANGER CONTROL
MONO/LOC
MUTE
7
1
8
2
9
3
10
4
11
5
12
6
CLOCK
DISP
OPEN
RANDOM
REP
PWR
SOURCE
LEVL
DIMMER

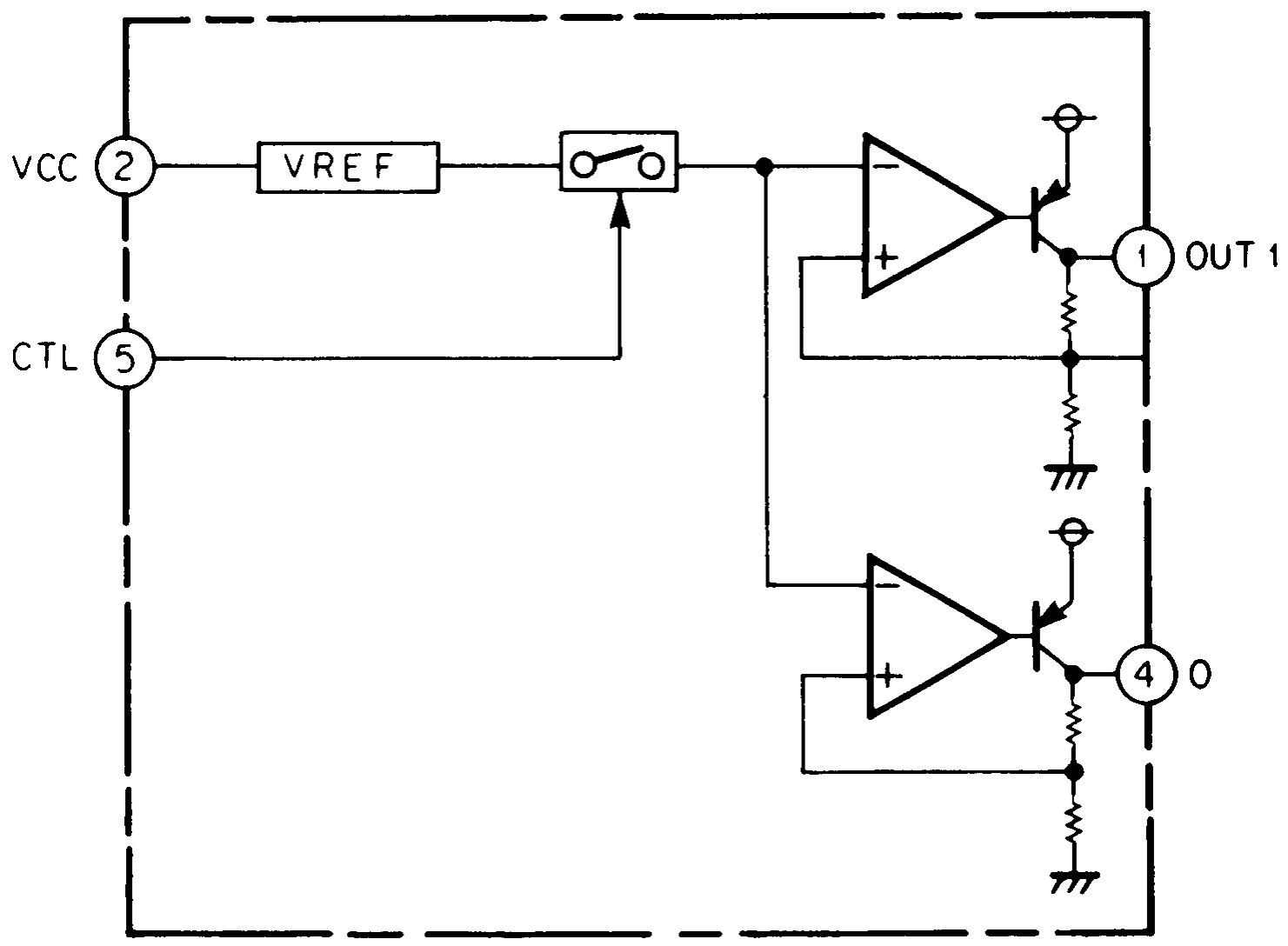
VCC
2
VREF
CTL
5
1
OUT 1
4
O

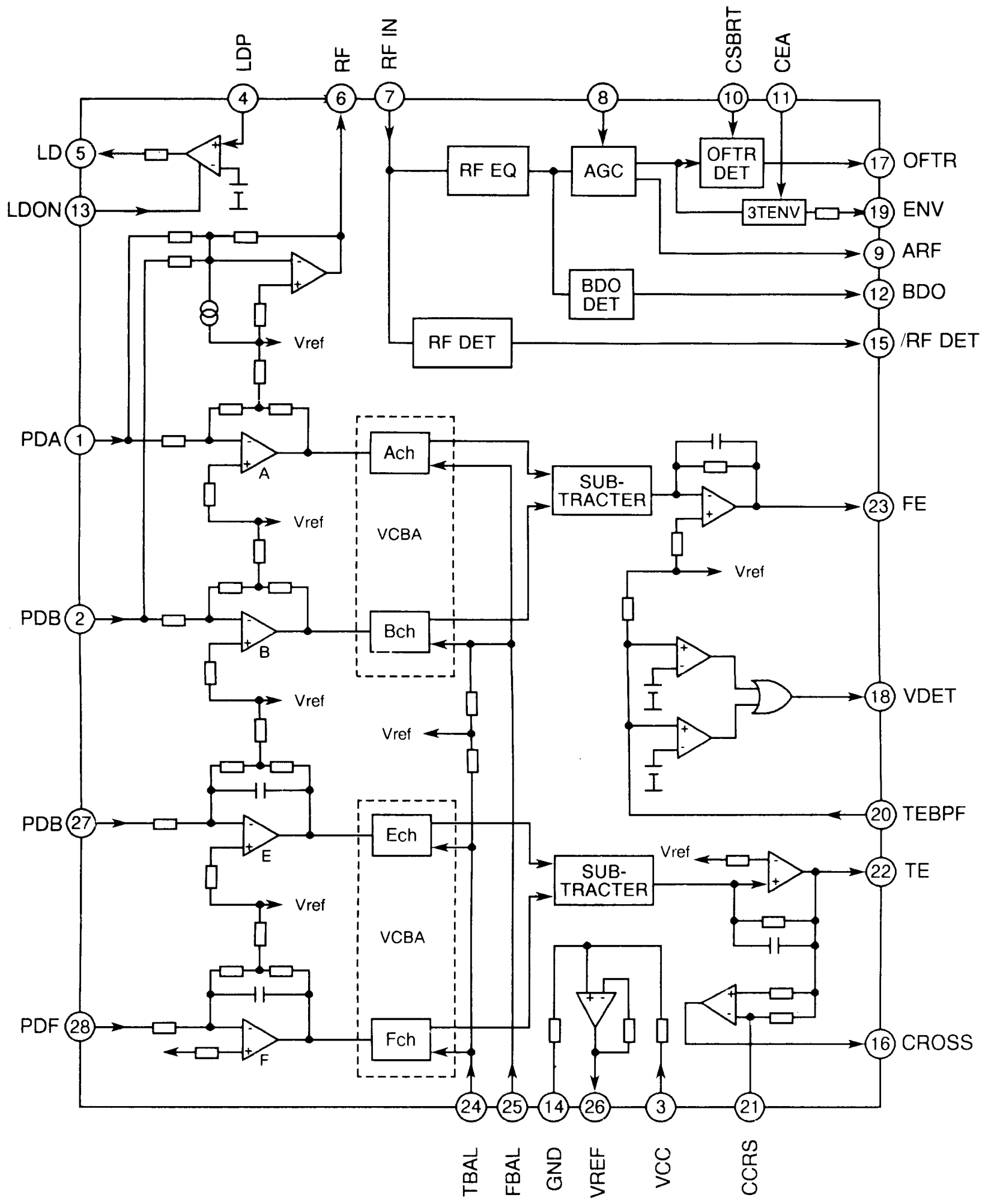
LDP
RF
RF IN
CSBRT
CEA
LD
LDON
RF EQ
AGC
OFTR DET
3TENV
OFTR
ENV
ARF
BDO DET
BDO
RF DET
/RF DET
Vref
PDA
A
Ach
VCBA
SUB-TRACTER
FE
PDB
B
Bch
VDET
TEBPF
PDB
E
Ech
TE
PDF
F
Fch
CROSS
TBAL
FBAL
GND
VREF
VCC
CCRS

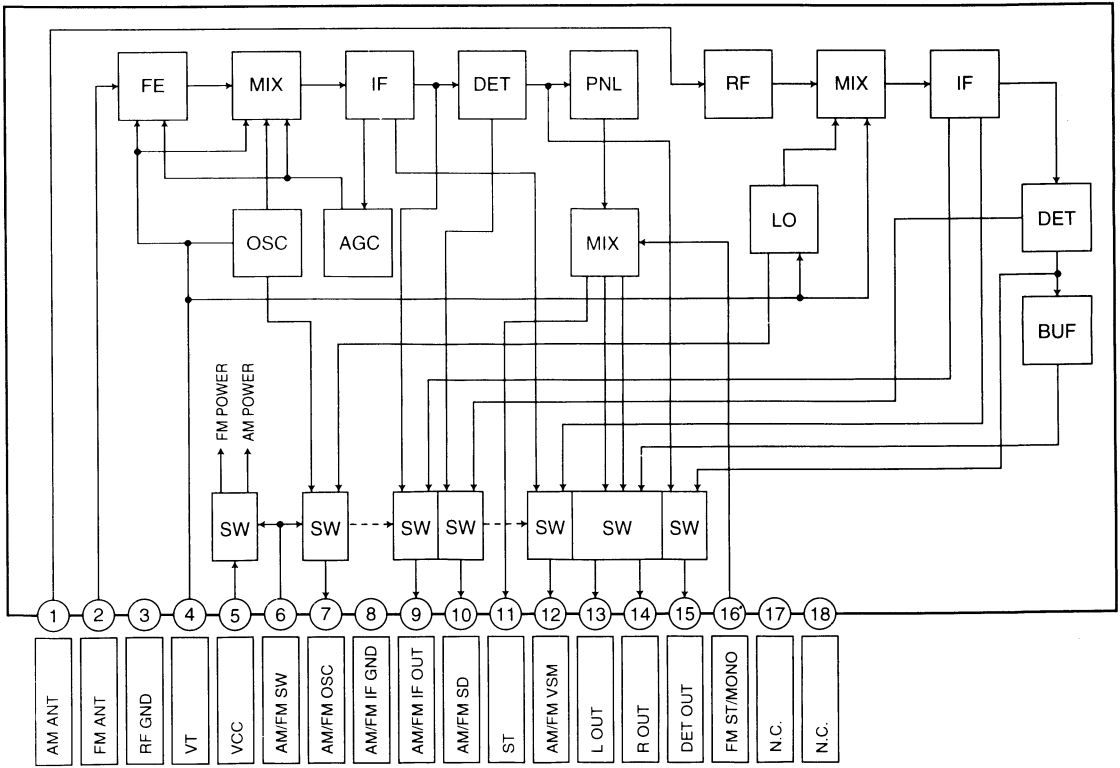
FE
MIX
IF
DET
PNL
RF
MIX
IF
OSC
AGC
MIX
LO
DET
BUF
FM POWER
AM POWER
SW
SW
SW
SW
SW
SW
SW
1
2
3
4
5
6
7
8
9
10
11
12
13
14
15
16
17
18
AM ANT
FM ANT
RF GND
VT
VCC
AM/FM SW
AM/FM OSC
AM/FM IF GND
AM/FM IF OUT
AM/FM SD
ST
AM/FM VSM
L OUT
R OUT
DET OUT
FM ST/MONO
N.C.
N.C.

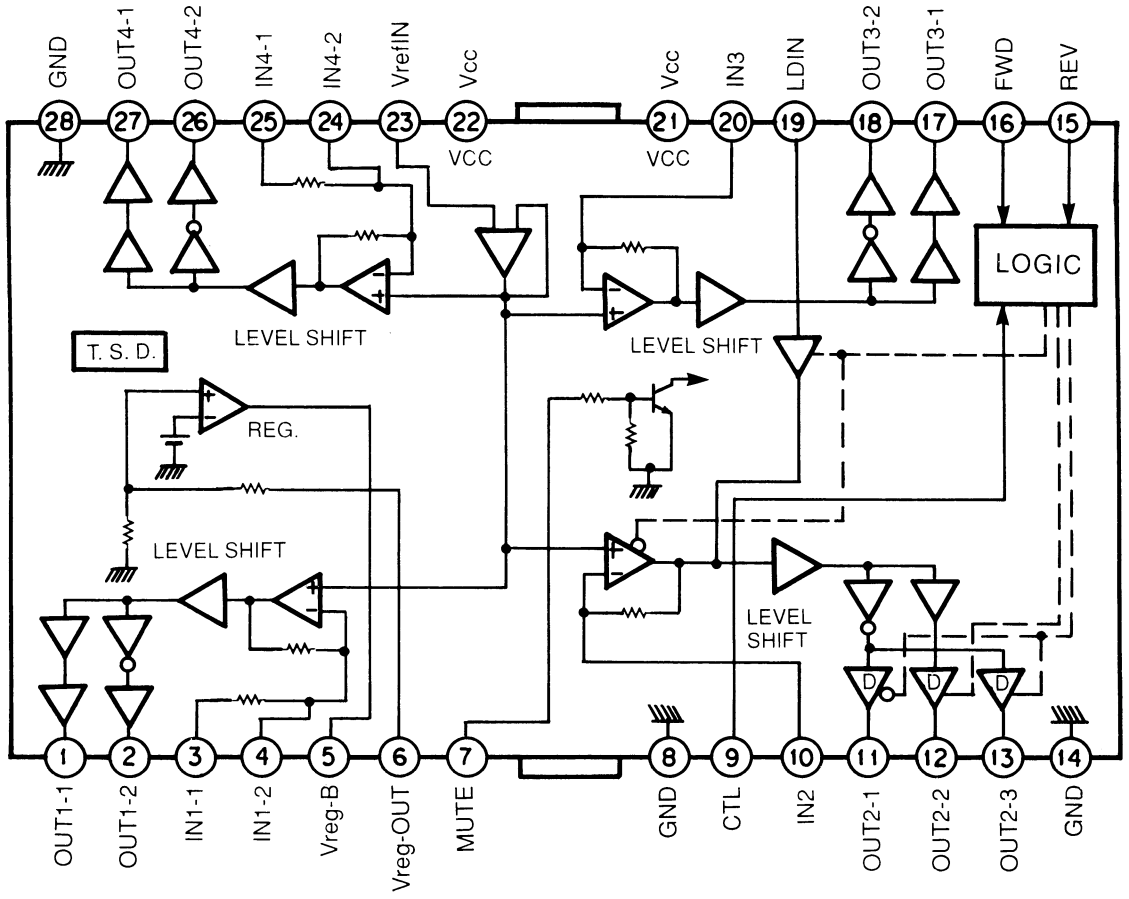
GND
OUT4-1
OUT4-2
IN4-1
IN4-2
VrefIN
Vcc
Vcc
IN3
LDIN
OUT3-2
OUT3-1
FWD
REV
28
27
26
25
24
23
22
21
20
19
18
17
16
15
VCC
VCC
LOGIC
LEVEL SHIFT
LEVEL SHIFT
T. S. D.
REG.
LEVEL SHIFT
LEVEL SHIFT
D
D
D
1
2
3
4
5
6
7
8
9
10
11
12
13
14
OUT1-1
OUT1-2
IN1-1
IN1-2
Vreg-B
Vreg-OUT
MUTE
GND
CTL
IN2
OUT2-1
OUT2-2
OUT2-3
GND

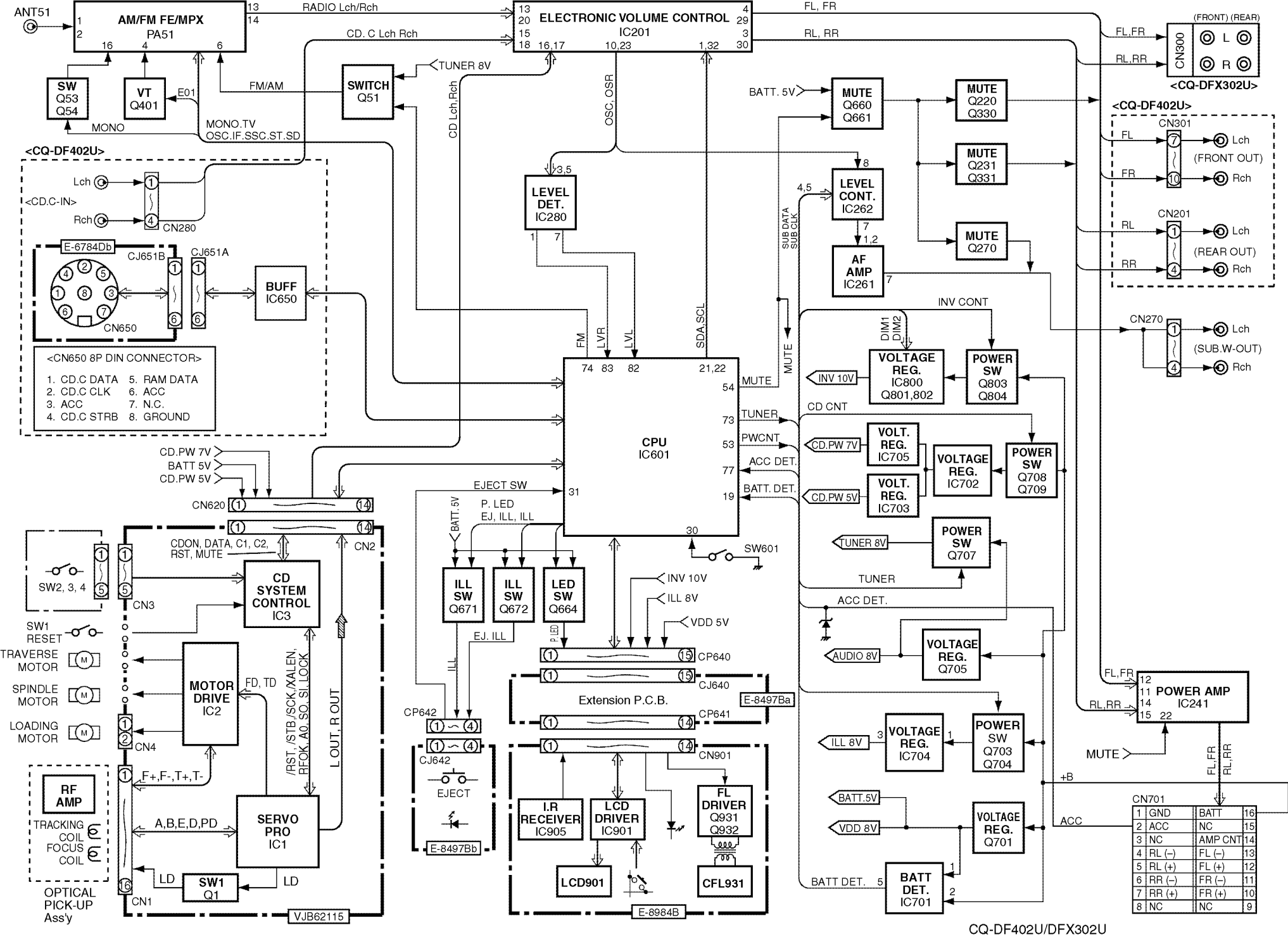

CQ-DF402U/DFX302U

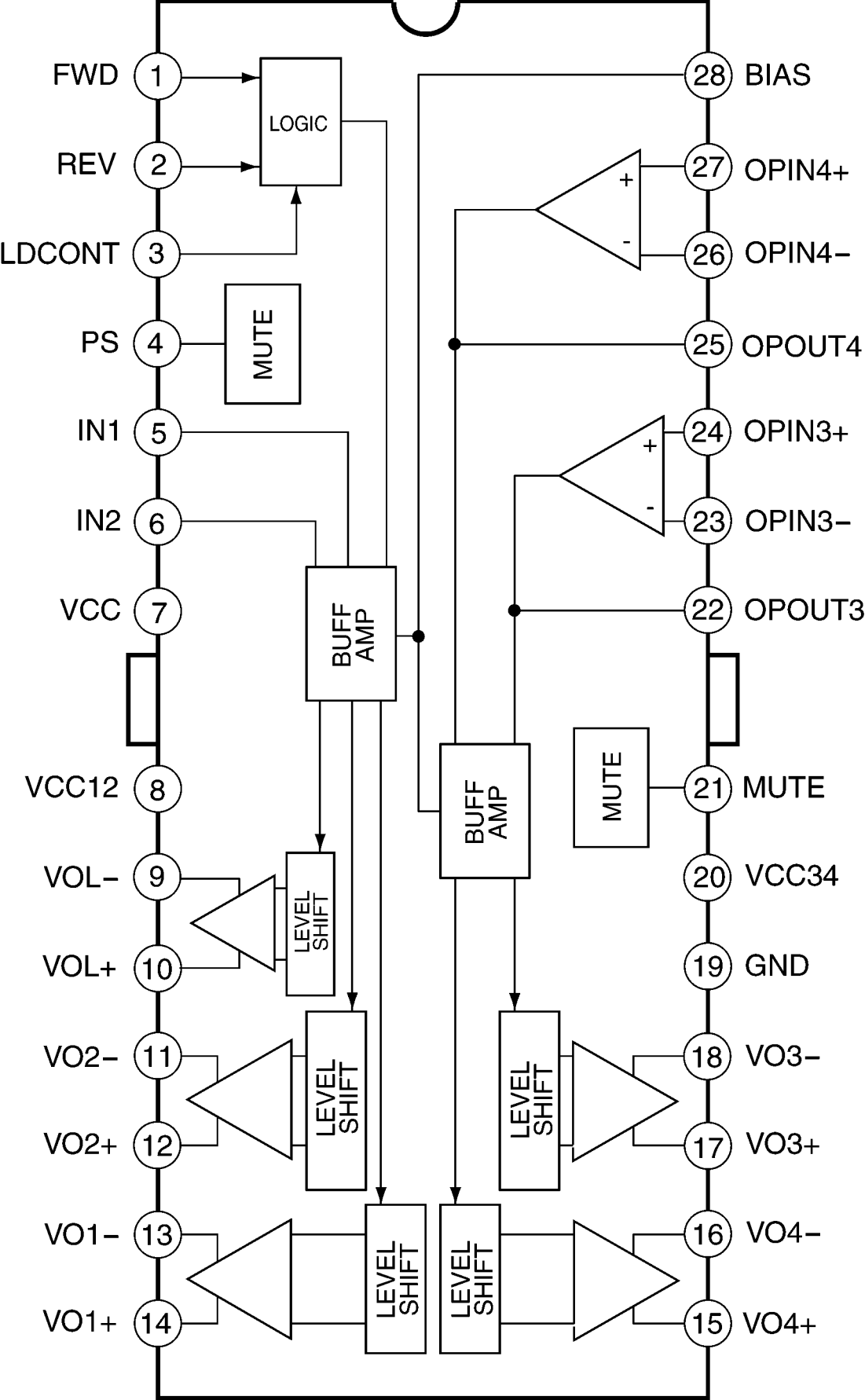
FWD
1
REV
2
LDCONT
3
PS
4
IN1
5
IN2
6
VCC
7
VCC12
8
VOL−
9
VOL+
10
VO2−
11
VO2+
12
VO1−
13
VO1+
14
LOGIC
MUTE
BUFF AMP
LEVEL SHIFT
LEVEL SHIFT
LEVEL SHIFT
LEVEL SHIFT
BUFF AMP
MUTE
28
BIAS
27
OPIN4+
26
OPIN4−
25
OPOUT4
24
OPIN3+
23
OPIN3−
22
OPOUT3
21
MUTE
20
VCC34
19
GND
18
VO3−
17
VO3+
16
VO4−
15
VO4+

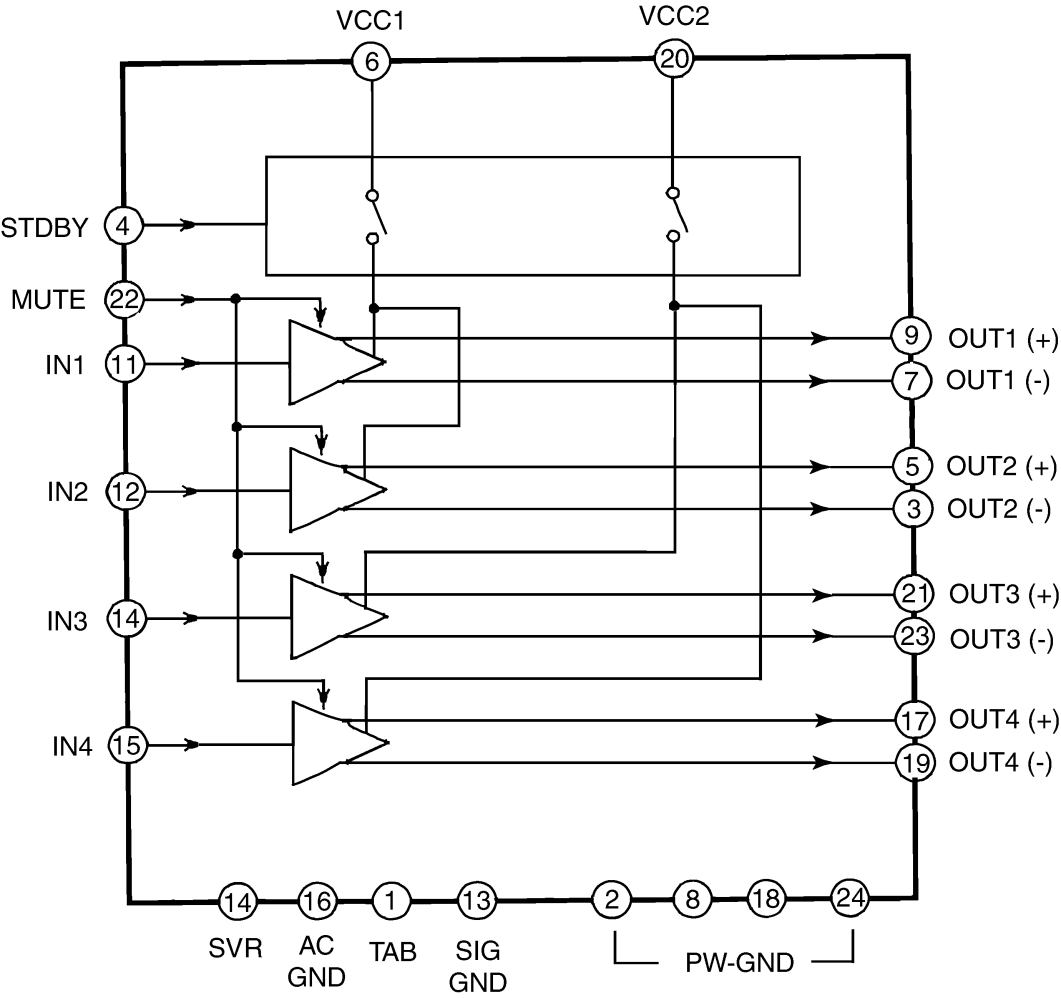
VCC1
6
VCC2
20
STDBY
4
MUTE
22
IN1
11
IN2
12
IN3
14
IN4
15
9
OUT1 (+)
7
OUT1 (-)
5
OUT2 (+)
3
OUT2 (-)
21
OUT3 (+)
23
OUT3 (-)
17
OUT4 (+)
19
OUT4 (-)
14
SVR
16
AC GND
1
TAB
13
SIG GND
2
8
18
24
PW-GND

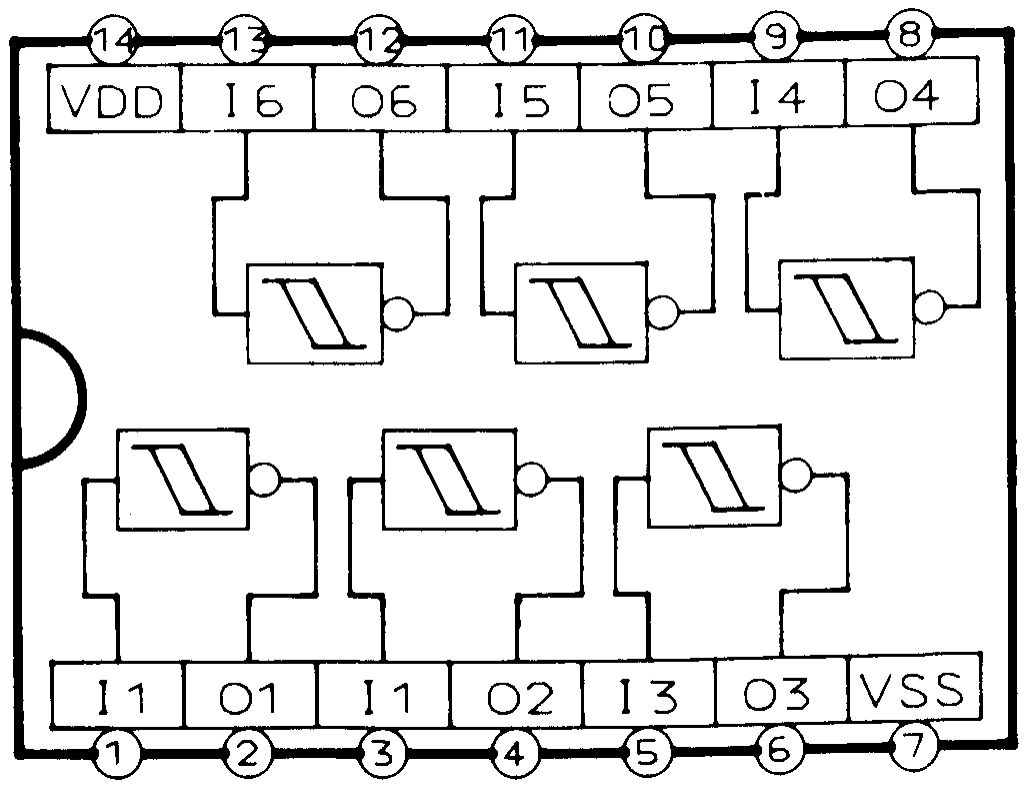
14
13
12
11
10
9
8
VDD
I6
O6
I5
O5
I4
O4
I1
O1
I1
O2
I3
O3
VSS
1
2
3
4
5
6
7

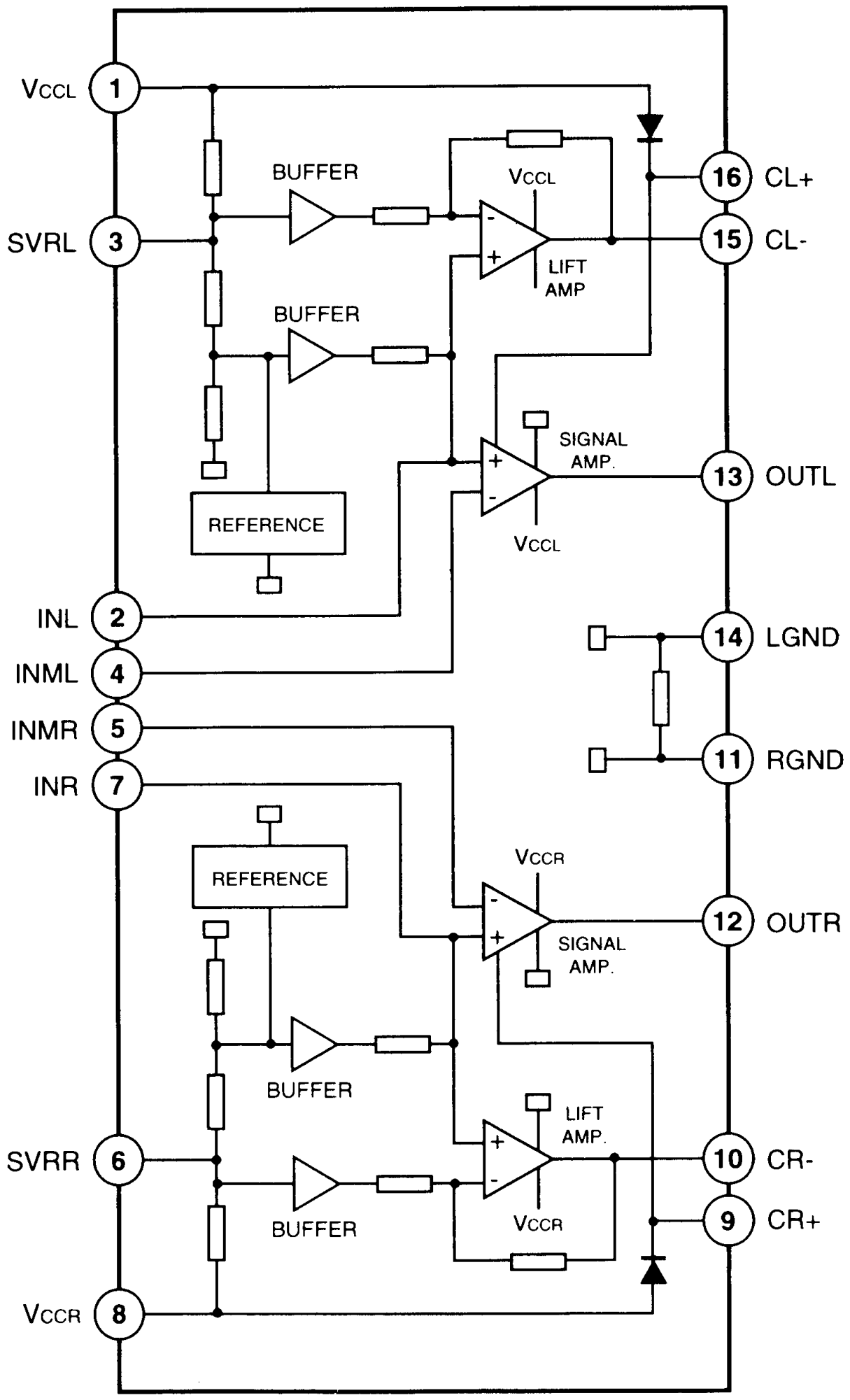
VCCL
1
SVRL
3
INL
2
INML
4
INMR
5
INR
7
SVRR
6
VCCR
8
BUFFER
BUFFER
VCCL
LIFT AMP
SIGNAL AMP.
VCCL
REFERENCE
16
CL+
15
CL-
13
OUTL
14
LGND
11
RGND
REFERENCE
VCCR
SIGNAL AMP.
12
OUTR
BUFFER
LIFT AMP.
BUFFER
VCCR
10
CR-
9
CR+

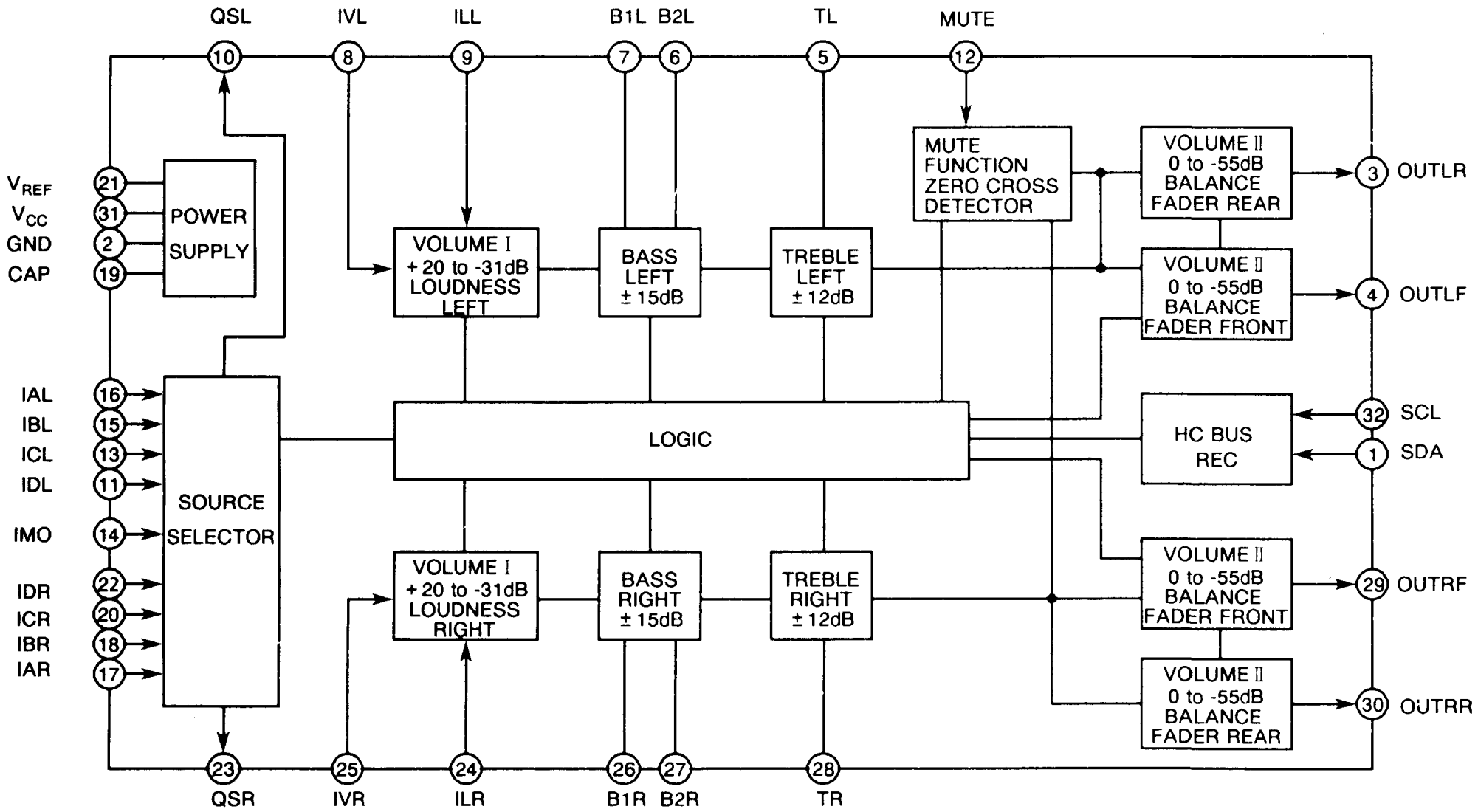
QSL
IVL
ILL
B1L
B2L
TL
MUTE
10
8
9
7
6
5
12
MUTE FUNCTION ZERO CROSS DETECTOR
VOLUME II 0 to -55dB BALANCE FADER REAR
3
OUTLR
VREF
VCC
GND
CAP
21
31
2
19
POWER SUPPLY
VOLUME I +20 to -31dB LOUDNESS LEFT
BASS LEFT ±15dB
TREBLE LEFT ±12dB
VOLUME II 0 to -55dB BALANCE FADER FRONT
4
OUTLF
IAL
IBL
ICL
IDL
IMO
IDR
ICR
IBR
IAR
16
15
13
11
14
22
20
18
17
SOURCE SELECTOR
LOGIC
HC BUS REC
32
SCL
1
SDA
VOLUME I +20 to -31dB LOUDNESS RIGHT
BASS RIGHT ±15dB
TREBLE RIGHT ±12dB
VOLUME II 0 to -55dB BALANCE FADER FRONT
29
OUTRF
VOLUME II 0 to -55dB BALANCE FADER REAR
30
OUTRR
23
25
24
26
27
28
QSR
IVR
ILR
B1R
B2R
TR

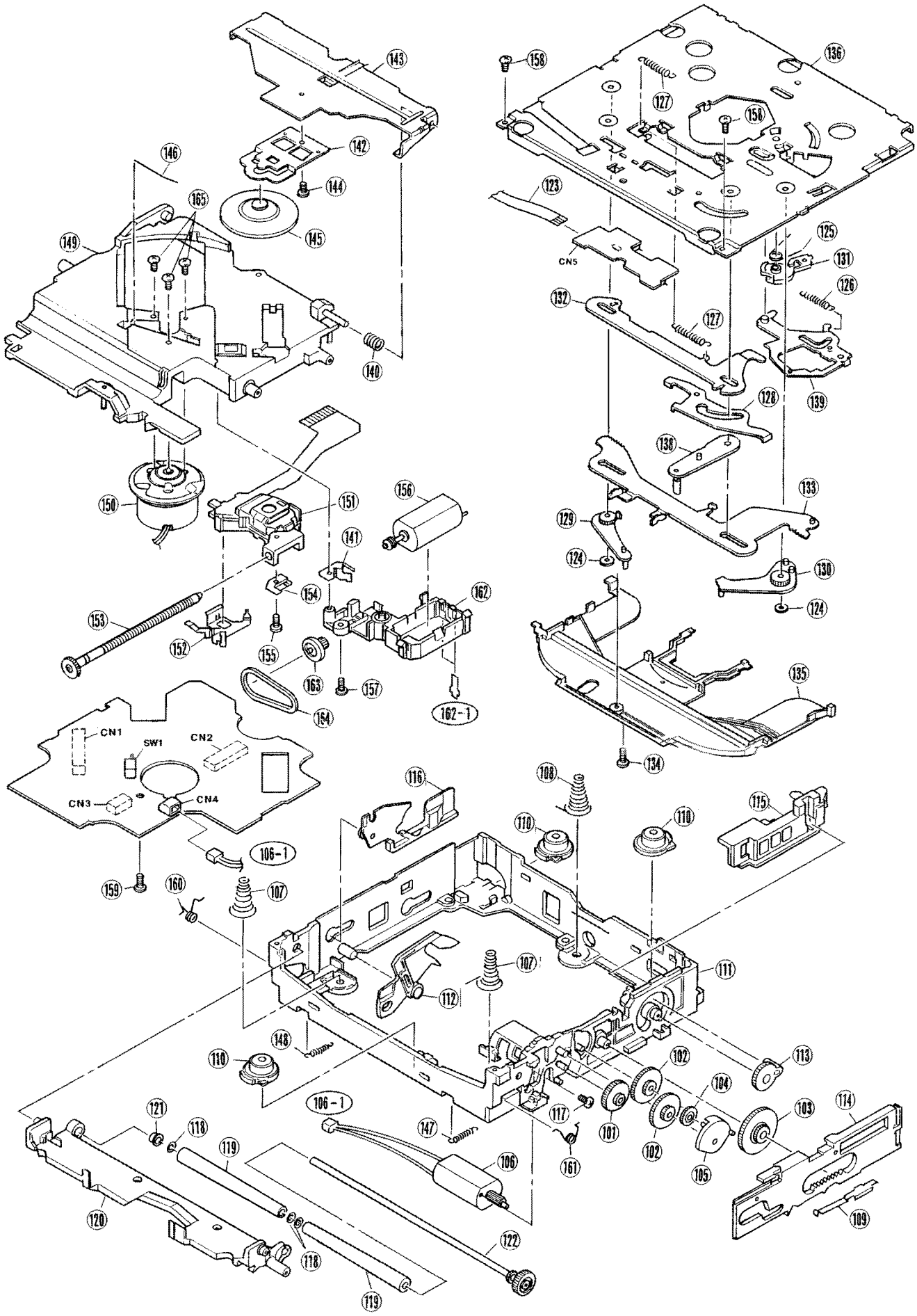

RAJ2722
'01.12.14

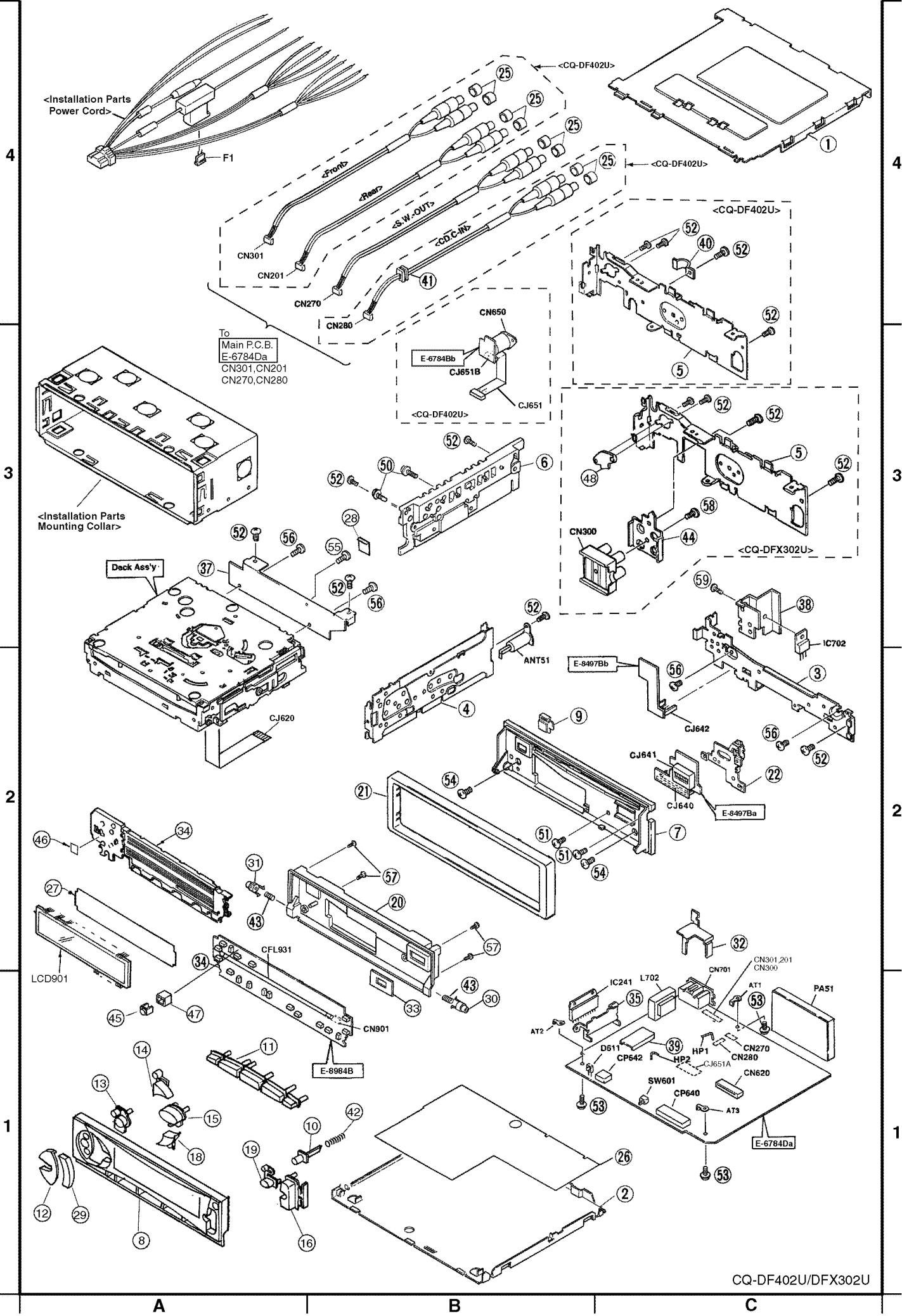
<Installation Parts Power Cord>
F1
<CQ-DF402U>
<Front>
<Rear>
<S.W.-OUT>
<CD.C-IN>
CN301
CN201
CN270
CN280
To
Main P.C.B.
E-6784Da
CN301,CN201
CN270,CN280
CN650
E-6784Bb
CJ651B
CJ651
<Installation Parts Mounting Collar>
Deck Ass'y
CJ620
ANT51
E-8497Bb
CJ642
IC702
CJ641
CJ640
E-8497Ba
CN300
<CQ-DFX302U>
LCD901
CFL931
CN901
E-8984B
IC241
L702
CN701
CN301,201
CN300
AT1
AT2
AT3
PA51
D611
CP642
HP1
HP2
CJ651A
CN270
CN280
CN620
SW601
CP640
E-6784Da

CAUTION:

This product utilizes a laser diode with the unit turned "on", laser radiation is emitted from the pickup lens.

Laser radiation from the pickup lens is safety level, but be sure the followings:

1. Do not disassemble the optical pickup unit, since radiation from exposed laser diode is dangerous.
2. Do not adjust the variable resistor on the pickup unit. It was already adjusted.
3. Do not look at the focus lens using optical instruments.
4. Recommend not to look at pickup lens for a long time.

DANGER! Invisible laser radiation when open. Avold direct exposure to beam.

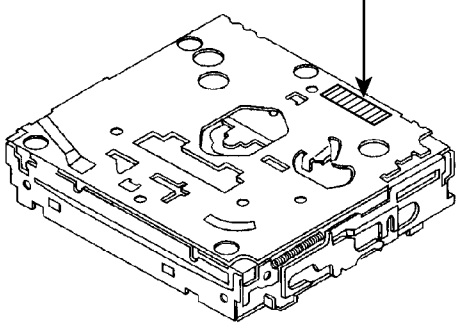

Deck Ass'y (Upper Side)

Caution

This Product utilizes a laser.

Use of controls or adjustments or performance of procedures other than those specified herein may result in hazardous radiation exposure.

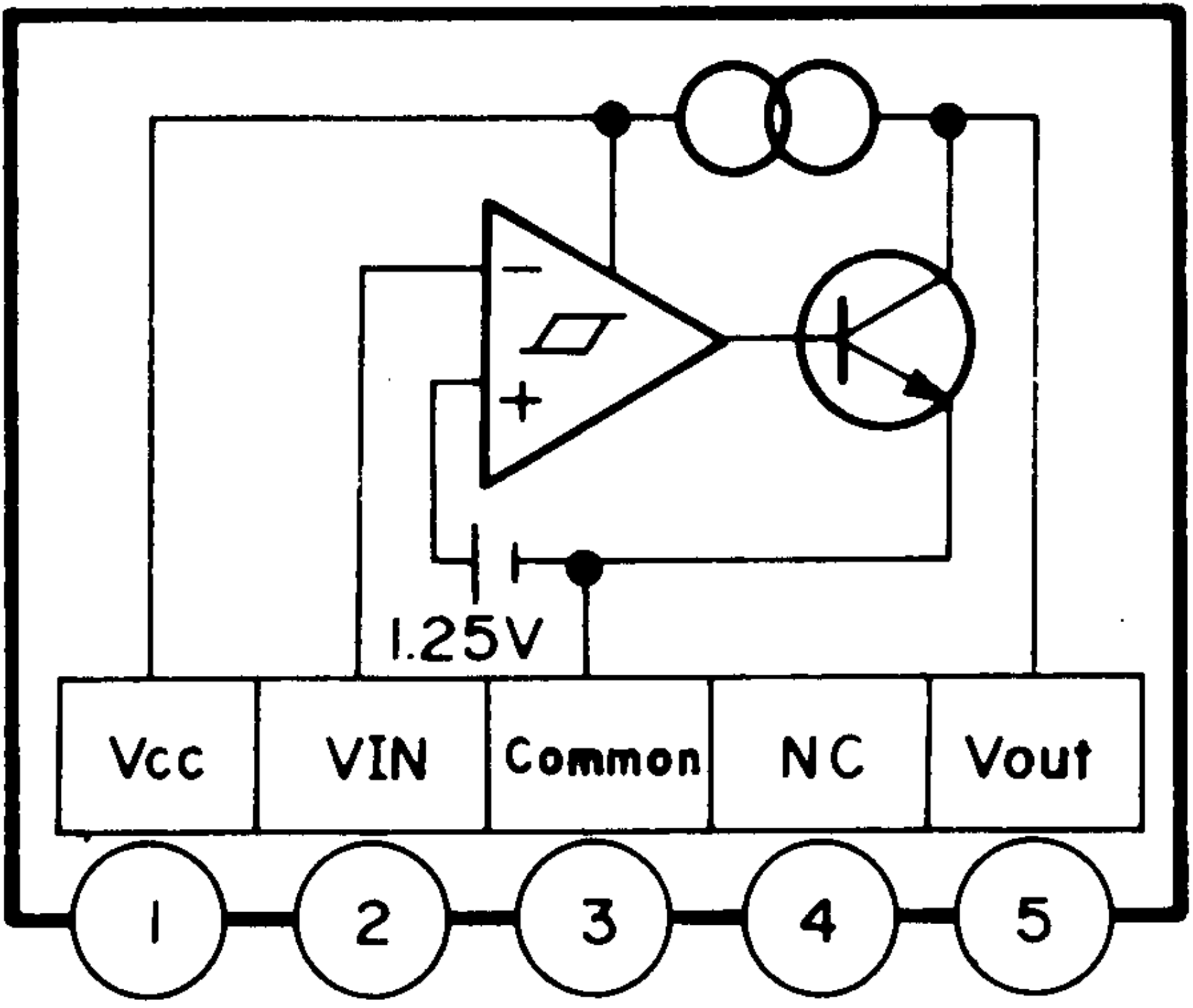
1.25V
Vcc
VIN
Common
NC
Vout
1
2
3
4
5

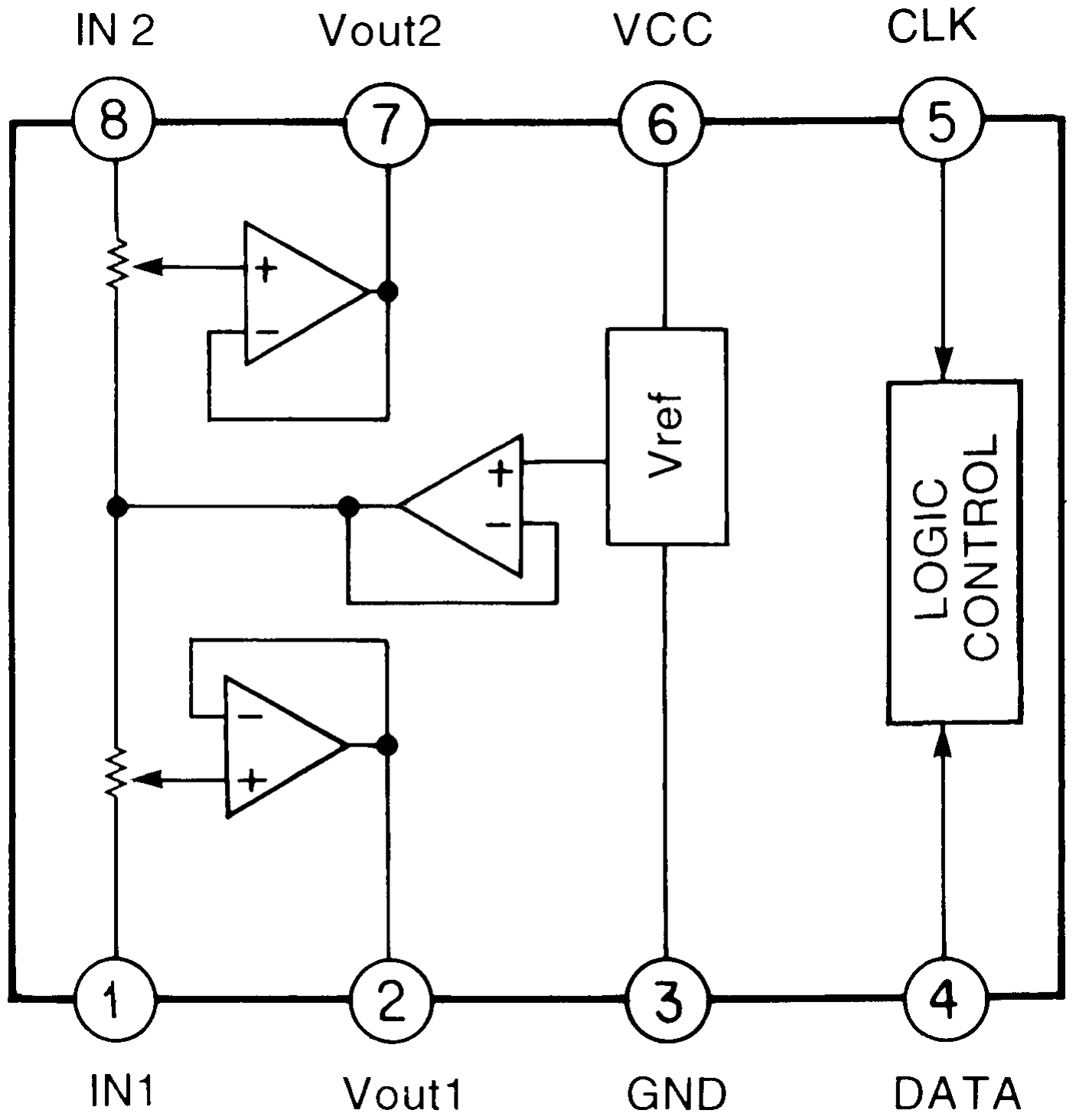
IN 2
Vout2
VCC
CLK
8
7
6
5
Vref
LOGIC CONTROL
1
2
3
4
IN1
Vout1
GND
DATA

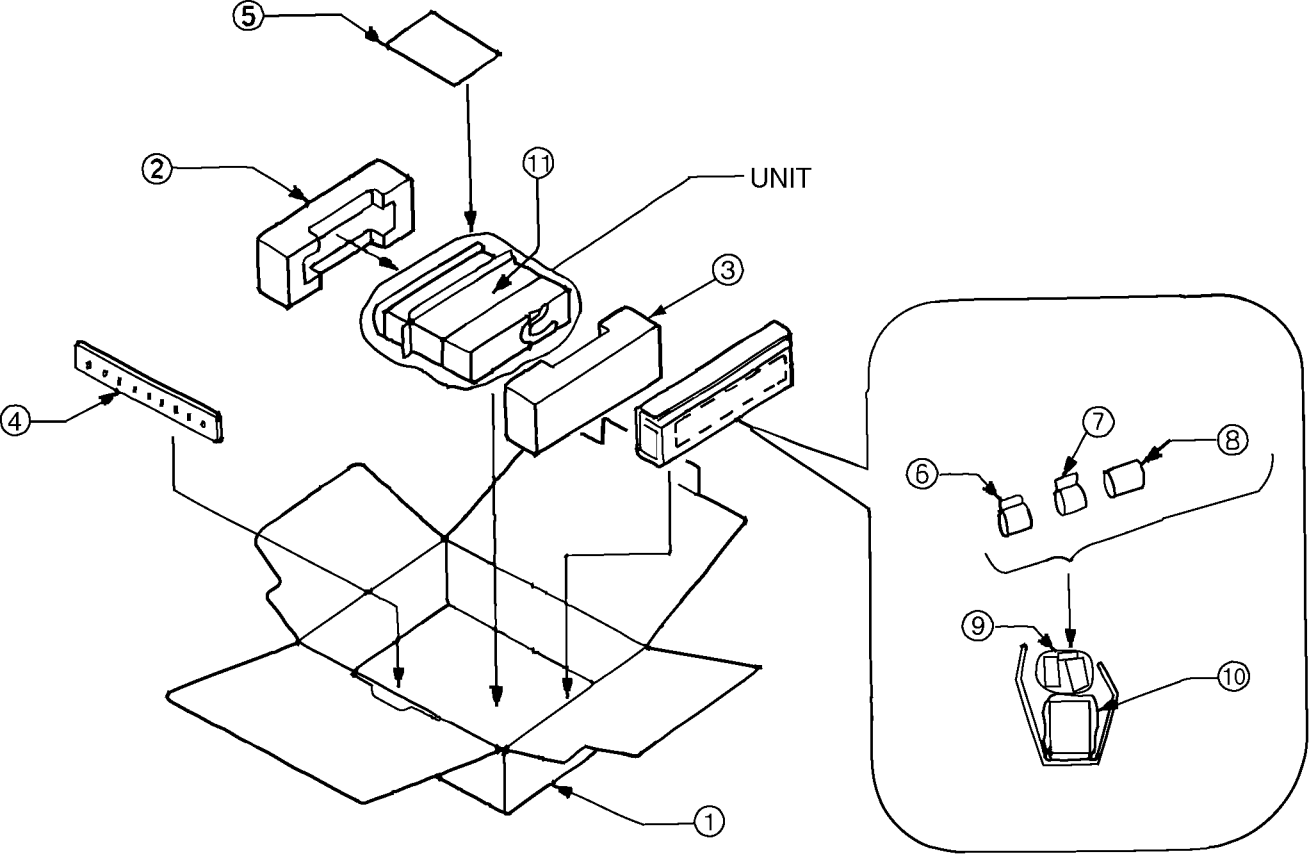
5
2
11
UNIT
3
4
7
8
6
9
10
1

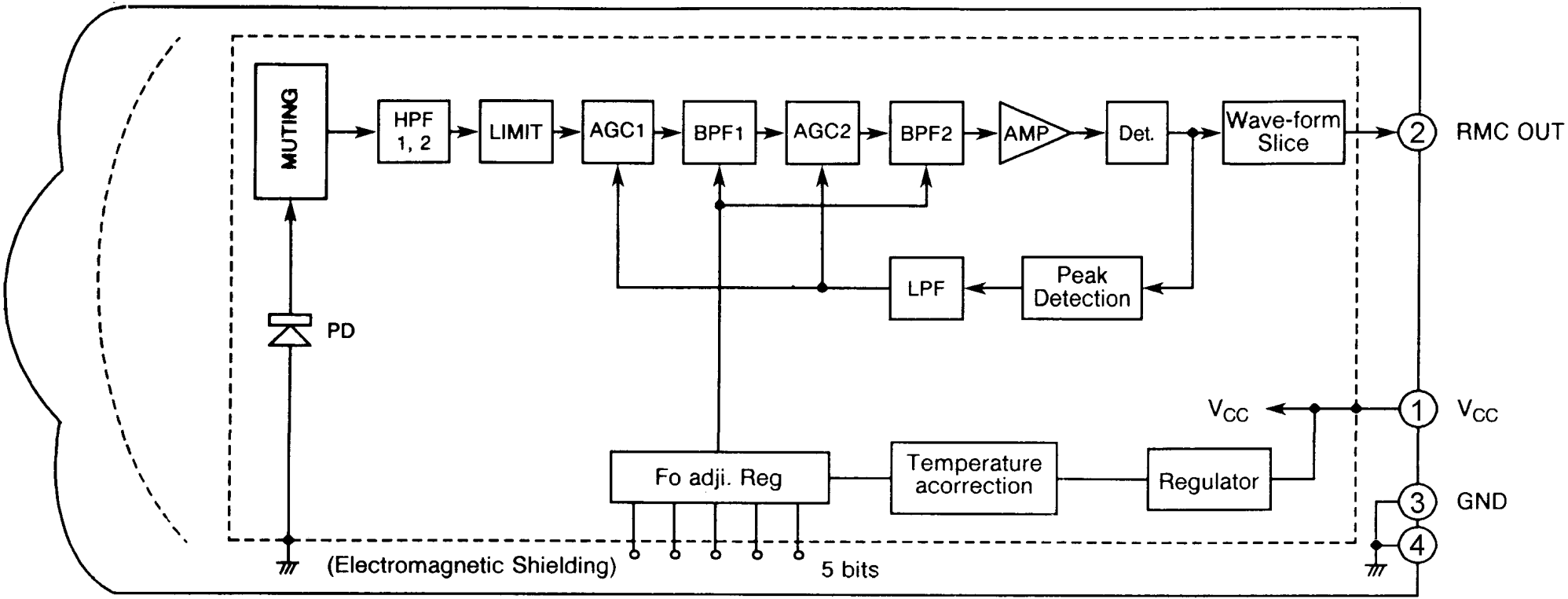
MUTING
HPF 1, 2
LIMIT
AGC1
BPF1
AGC2
BPF2
AMP
Det.
Wave-form Slice
2
RMC OUT
LPF
Peak Detection
PD
VCC
1
VCC
Fo adji. Reg
Temperature acorrection
Regulator
3
GND
4
(Electromagnetic Shielding)
5 bits

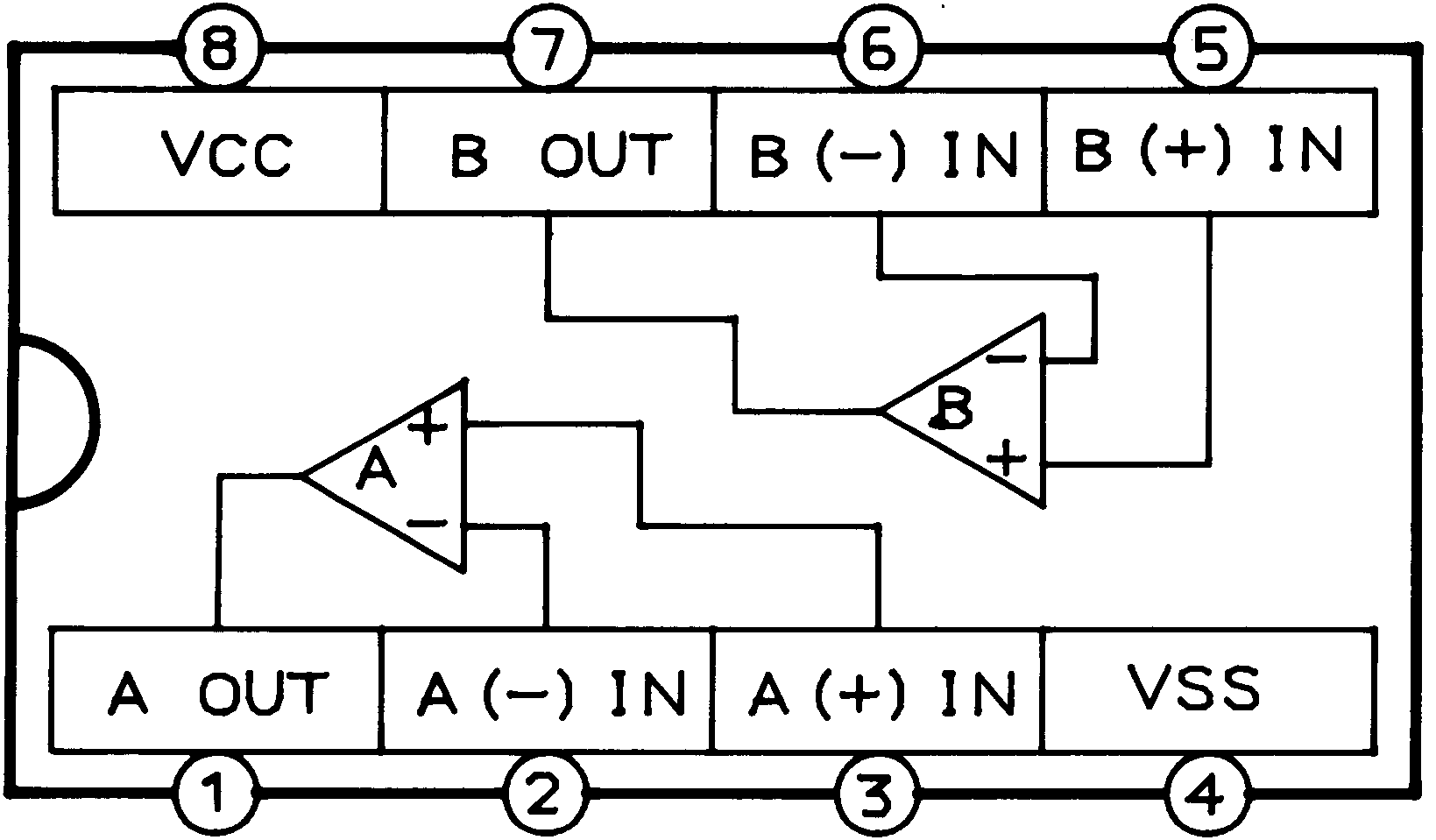
8
7
6
5
VCC
B OUT
B (−) IN
B (+) IN
A
+
−
B
−
+
A OUT
A (−) IN
A (+) IN
VSS
1
2
3
4

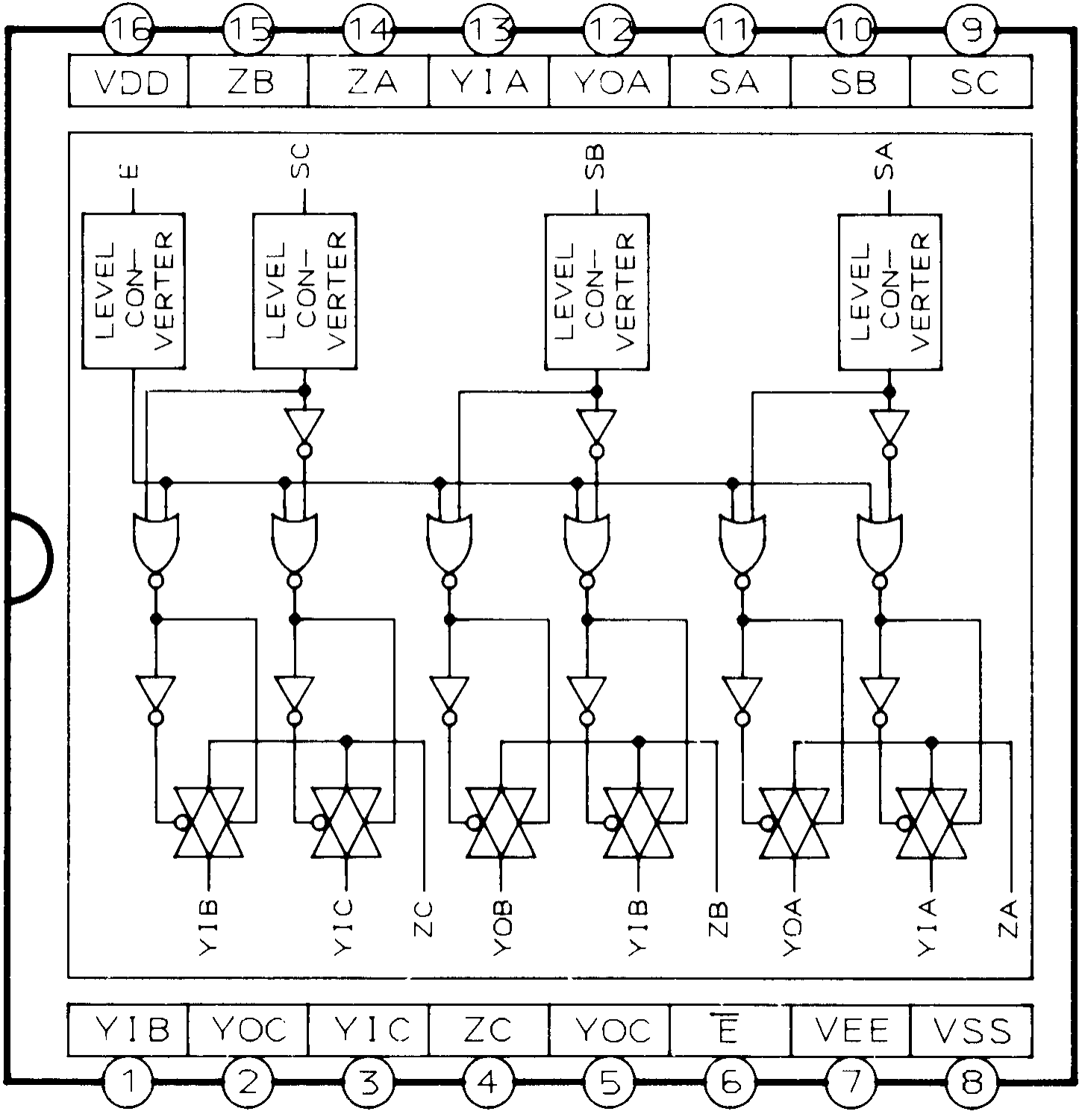
16
15
14
13
12
11
10
9
VDD
ZB
ZA
YIA
YOA
SA
SB
SC
E
SC
SB
SA
LEVEL CON- VERTER
LEVEL CON- VERTER
LEVEL CON- VERTER
LEVEL CON- VERTER
YIB
YIC
ZC
YOB
YIB
ZB
YOA
YIA
ZA
YIB
YOC
YIC
ZC
YOC
$\overline{E}$
VEE
VSS
1
2
3
4
5
6
7
8

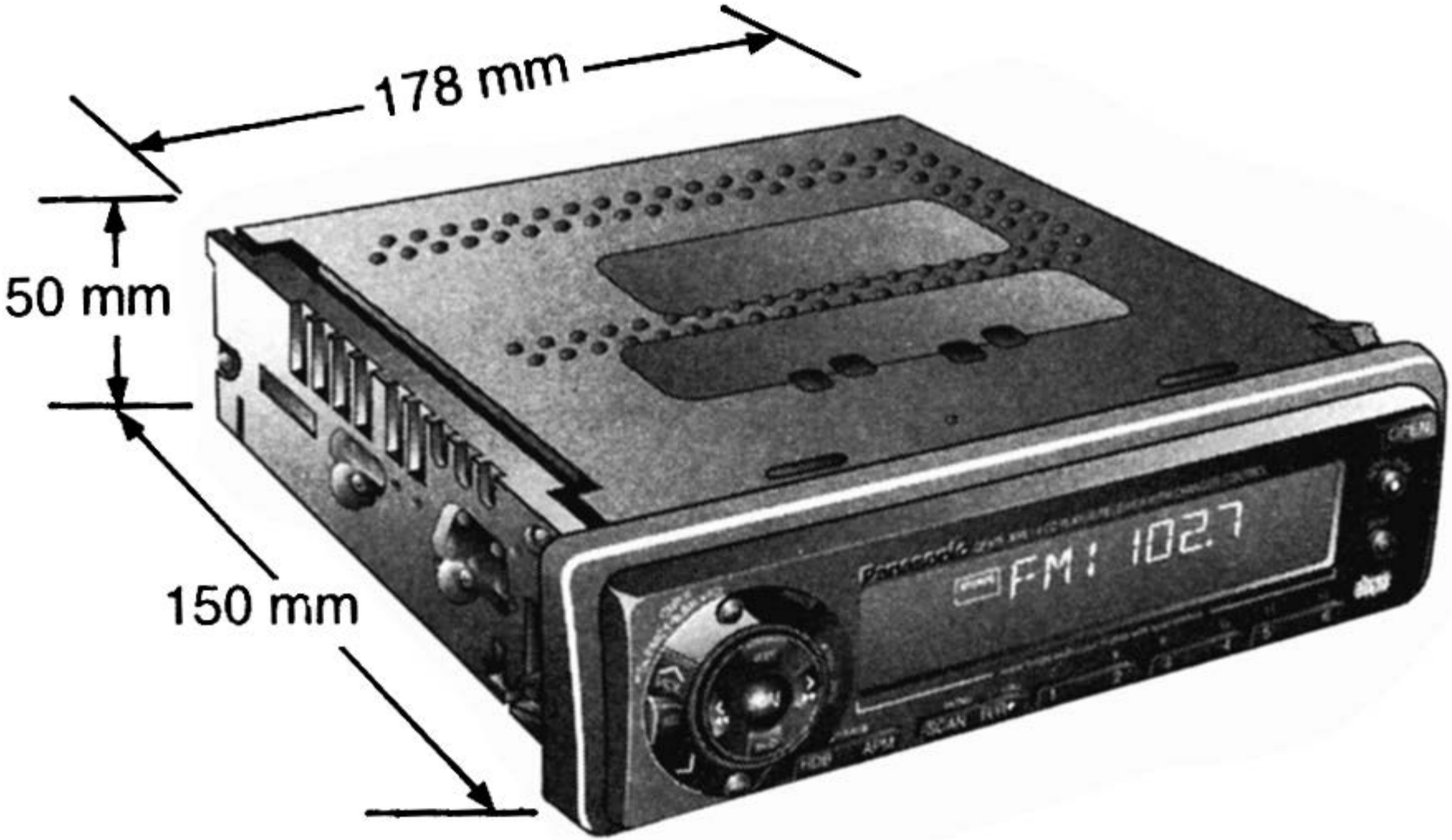
178 mm
50 mm
150 mm
FM 1 102.7
SCAN

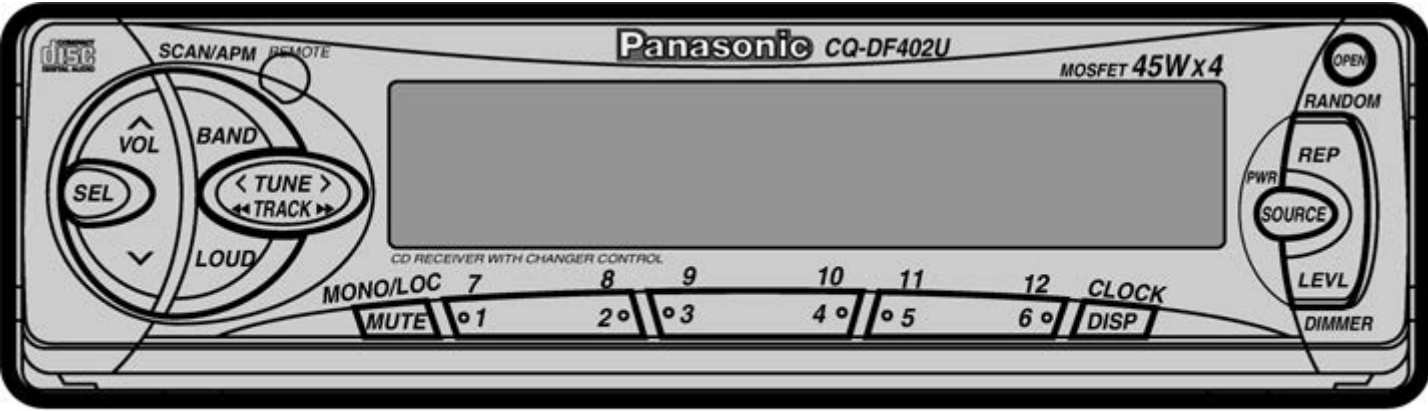
Panasonic CQ-DF402U
MOSFET 45W x 4
SCAN/APM
REMOTE
VOL
BAND
SEL
TUNE
TRACK
LOUD
CD RECEIVER WITH CHANGER CONTROL
MONO/LOC
7
8
9
10
11
12
CLOCK
MUTE
1
2
3
4
5
6
DISP
OPEN
RANDOM
REP
PWR
SOURCE
LEVL
DIMMER

(CQ-DF402U)

18.3. CD Servo Block

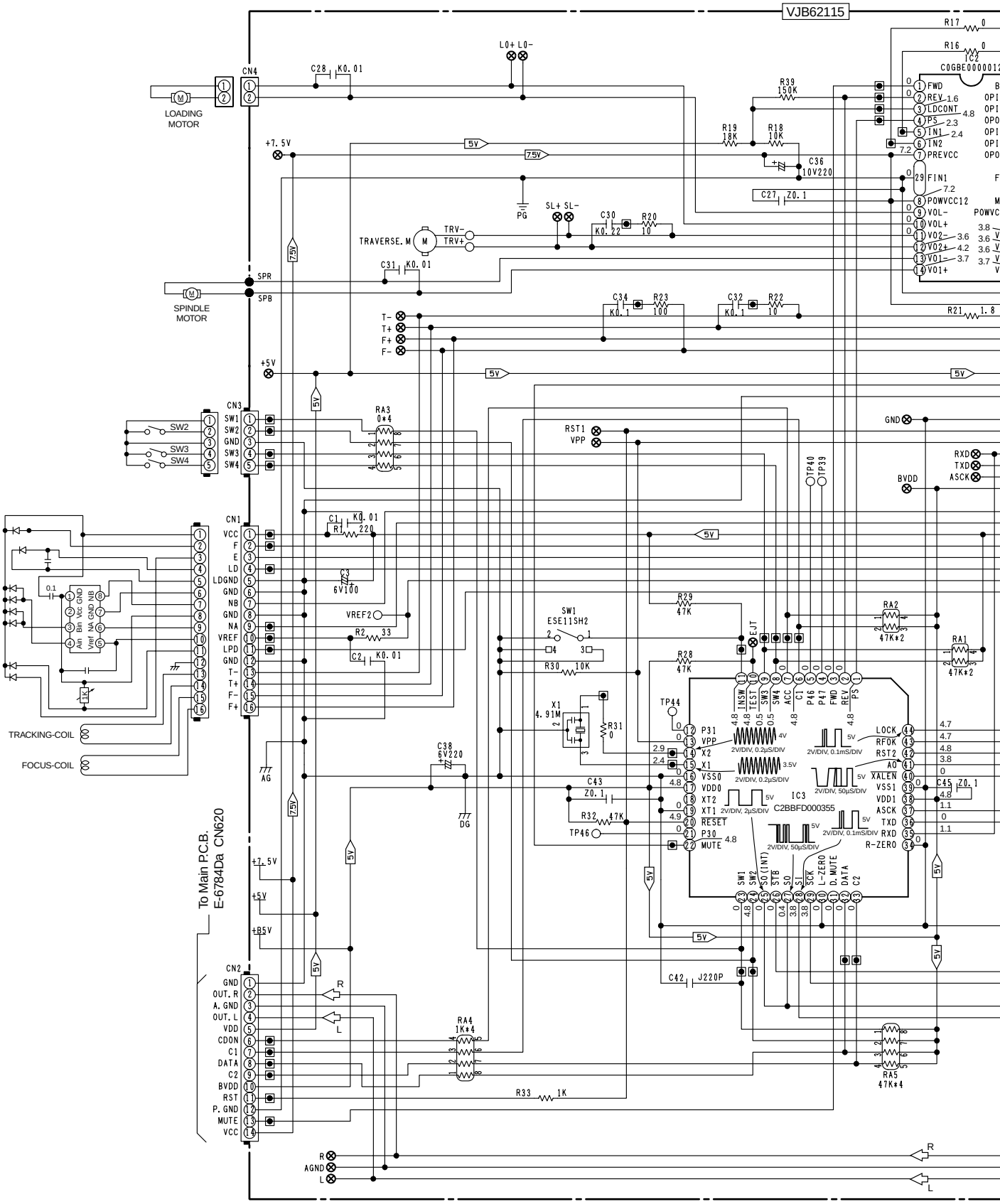

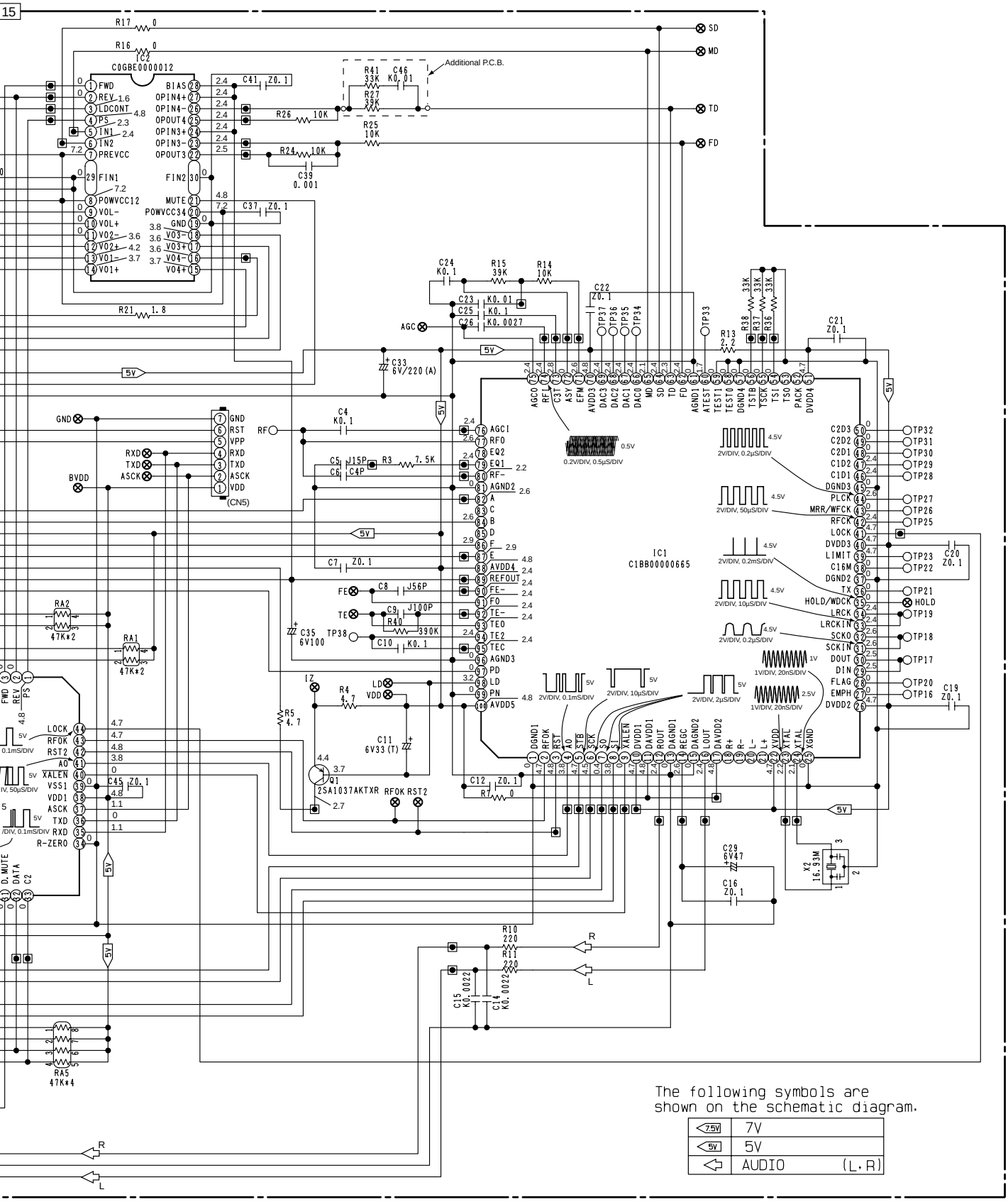

CQ-DF402U/DFX302U CD BLOCK (RAJ2722)

Printed in Japan (K) 2002.3 (Recycled Paper)

18 SCHEMATIC DIAGRAM (2)

18.1. Display Block

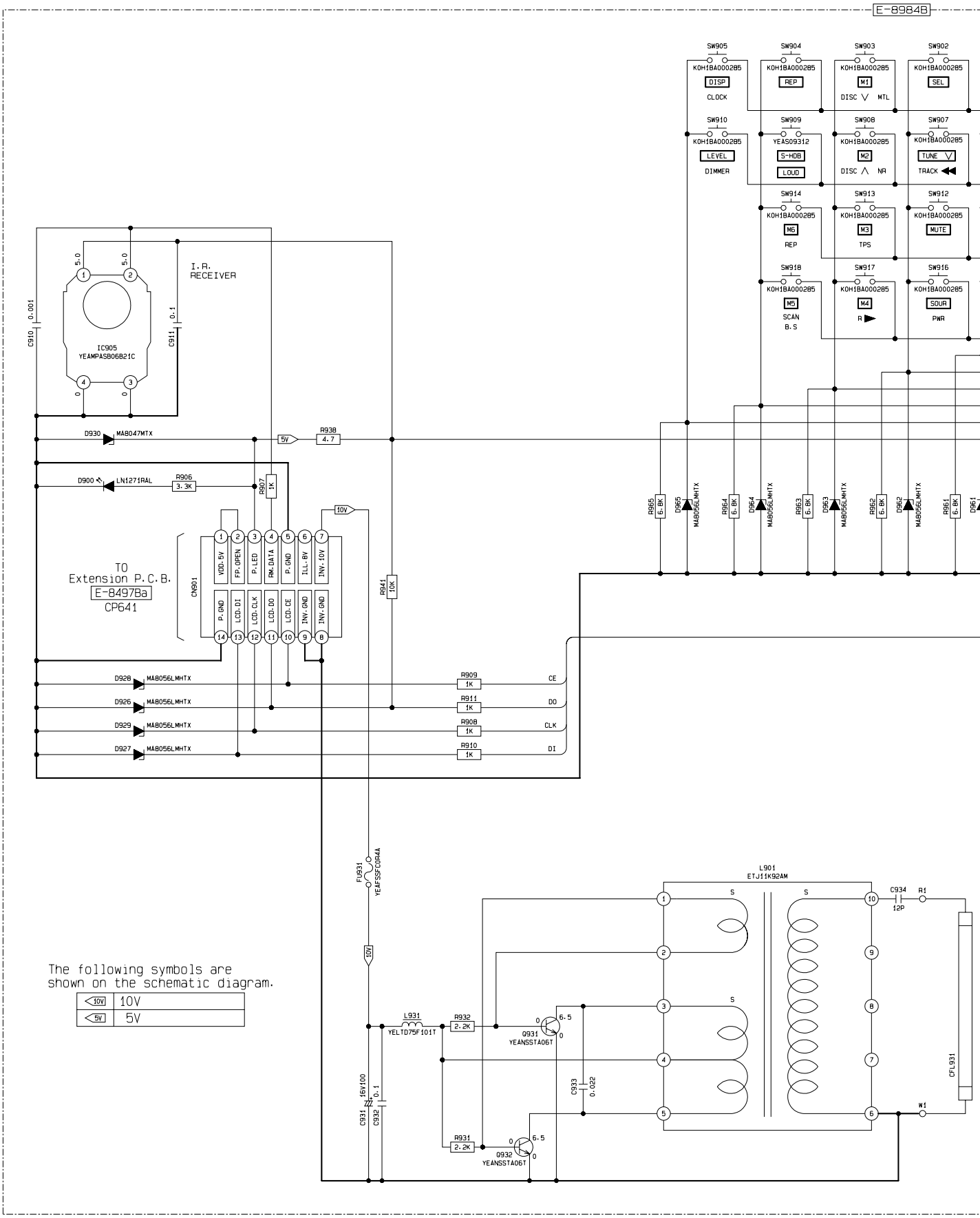

The following symbols are shown on the schematic diagram.

10V	10V
5V	5V

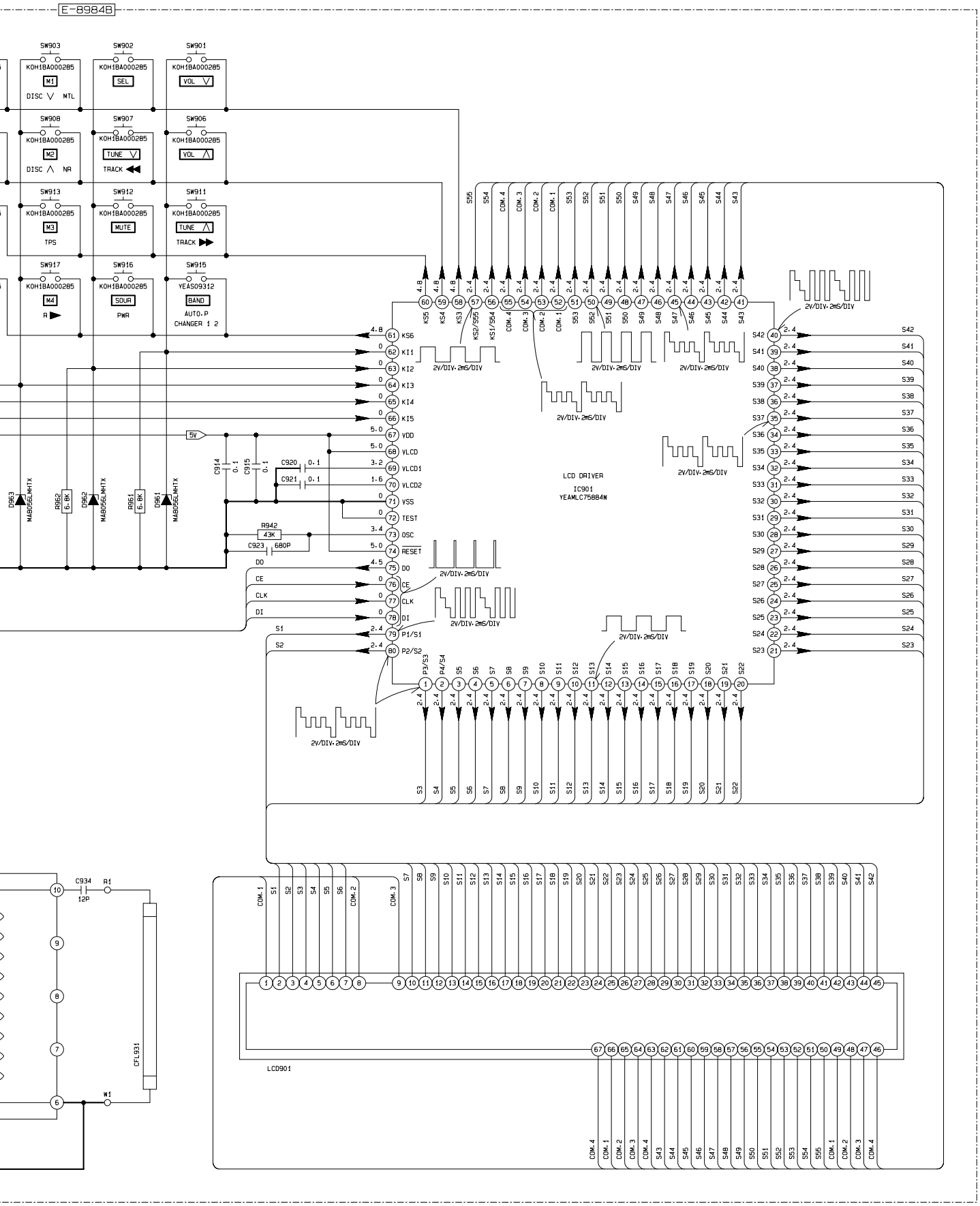
E-8984B
SW903
SW902
SW901
SW908
SW907
SW906
SW913
SW912
SW911
SW917
SW916
SW915
KOH1BA000285
M1
DISC ∨ MTL
SEL
VOL ∨
M2
DISC ∧ NR
TUNE ∨
TRACK ◀◀
VOL ∧
M3
TPS
MUTE
TUNE ∧
TRACK ▶▶
M4
R ▶
SOUR
PWR
YEAS09312
BAND
AUTO.P
CHANGER 1 2
LCD DRIVER
IC901
YEAMLC75BB4W
2V/DIV·2mS/DIV
5V
C914 0.1
C915 0.1
C920 0.1
C921 0.1
R942 43K
C923 680P
D963 MA8056LWHTX
R962 6.8K
D962 MA8056LWHTX
R961 6.8K
D961 MA8056LWHTX
C934 12P
R1
W1
CFL931
LCD901

18.2. Main Block

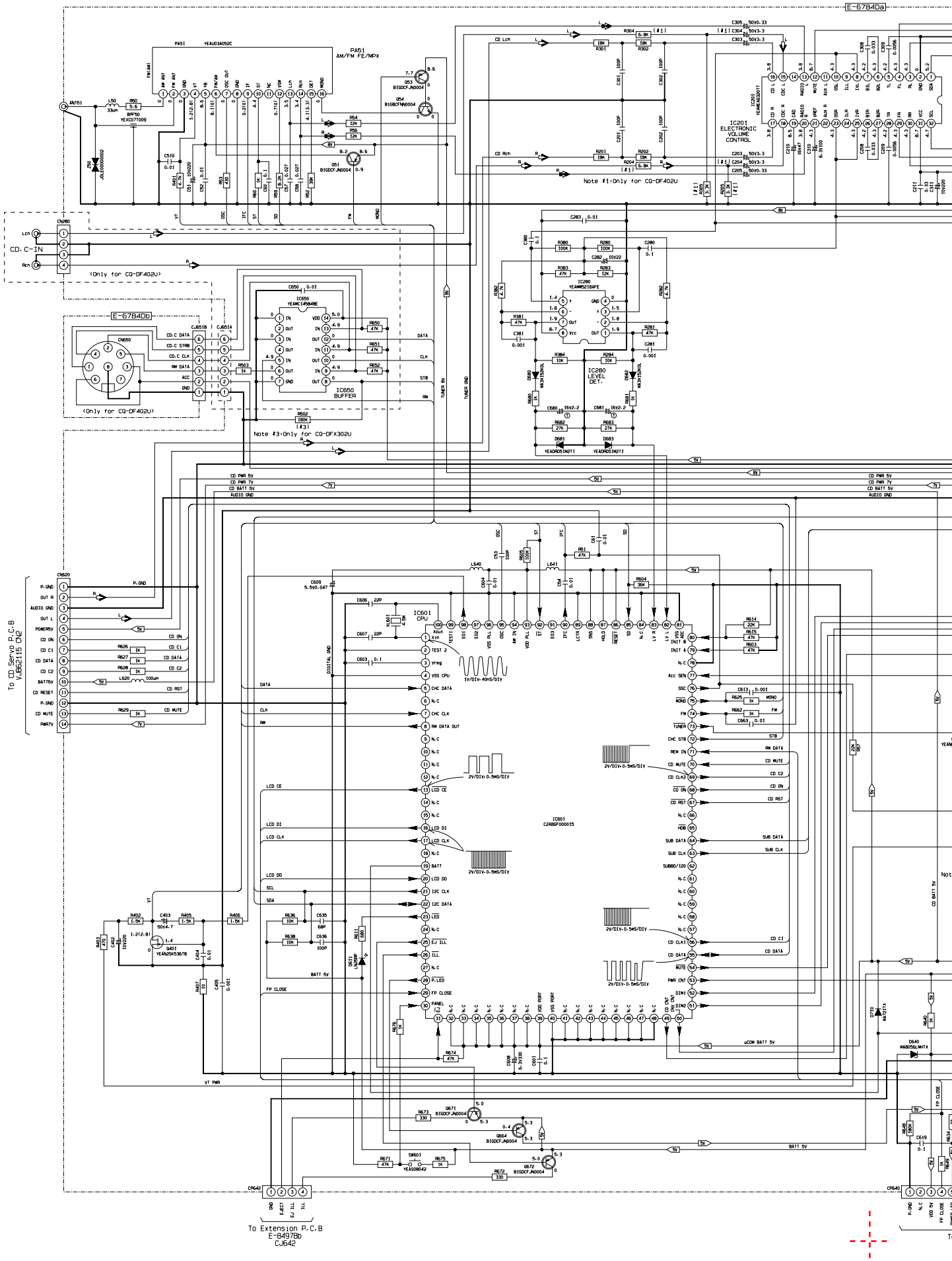

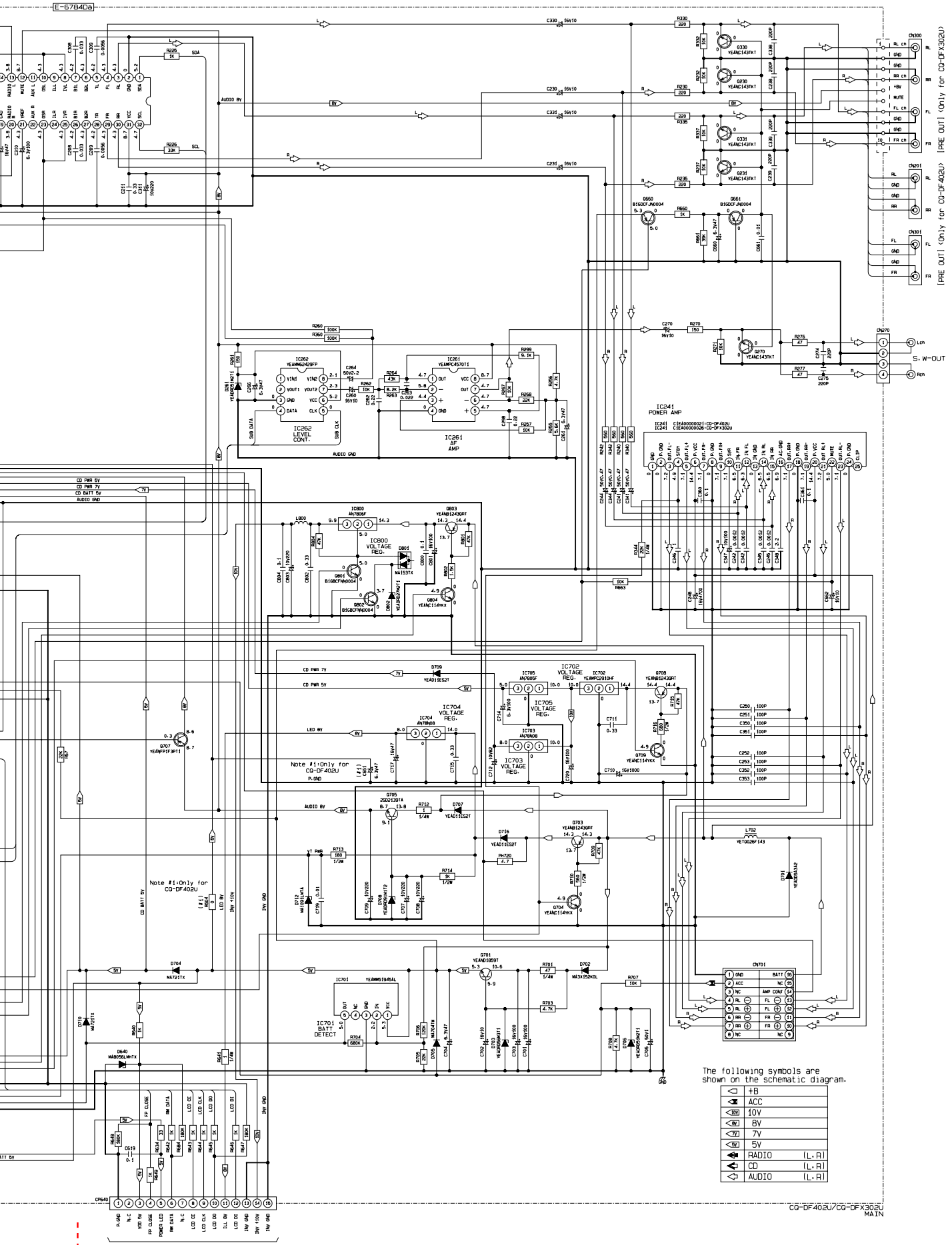
E-6784Da
IC262 LEVEL CONT.
IC261 AF AMP
IC241 POWER AMP
IC800 VOLTAGE REG.
IC702 VOLTAGE REG.
IC705 VOLTAGE REG.
IC704 VOLTAGE REG.
IC703 VOLTAGE REG.
IC701 BATT DETECT
Note #1:Only for CG-DF402U
CN300
CN201
CN301
CN270
CN701
CP640
S.W-OUT
[PRE OUT] (Only for CG-DF402U)
[PRE OUT] (Only for CG-DFX302U)
To Extension P.C.B E-8497Ba CJ640
CG-DF402U/CG-DFX302U MAIN
The following symbols are shown on the schematic diagram.
+B
ACC
10V
8V
7V
5V
RADIO (L,R)
CD (L,R)
AUDIO (L,R)

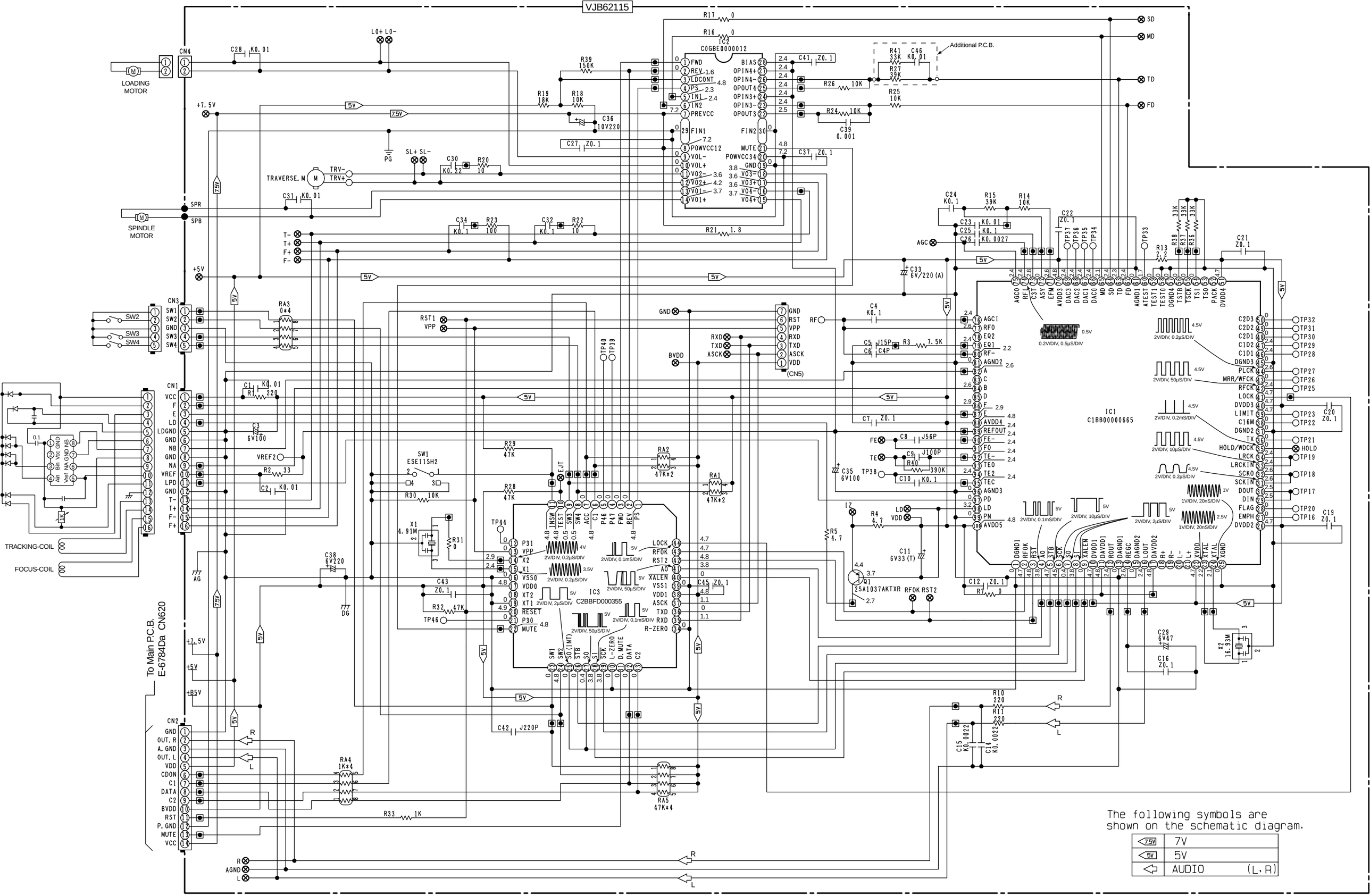

Printed in Japan (K) 2002.3 (Recycled Paper)

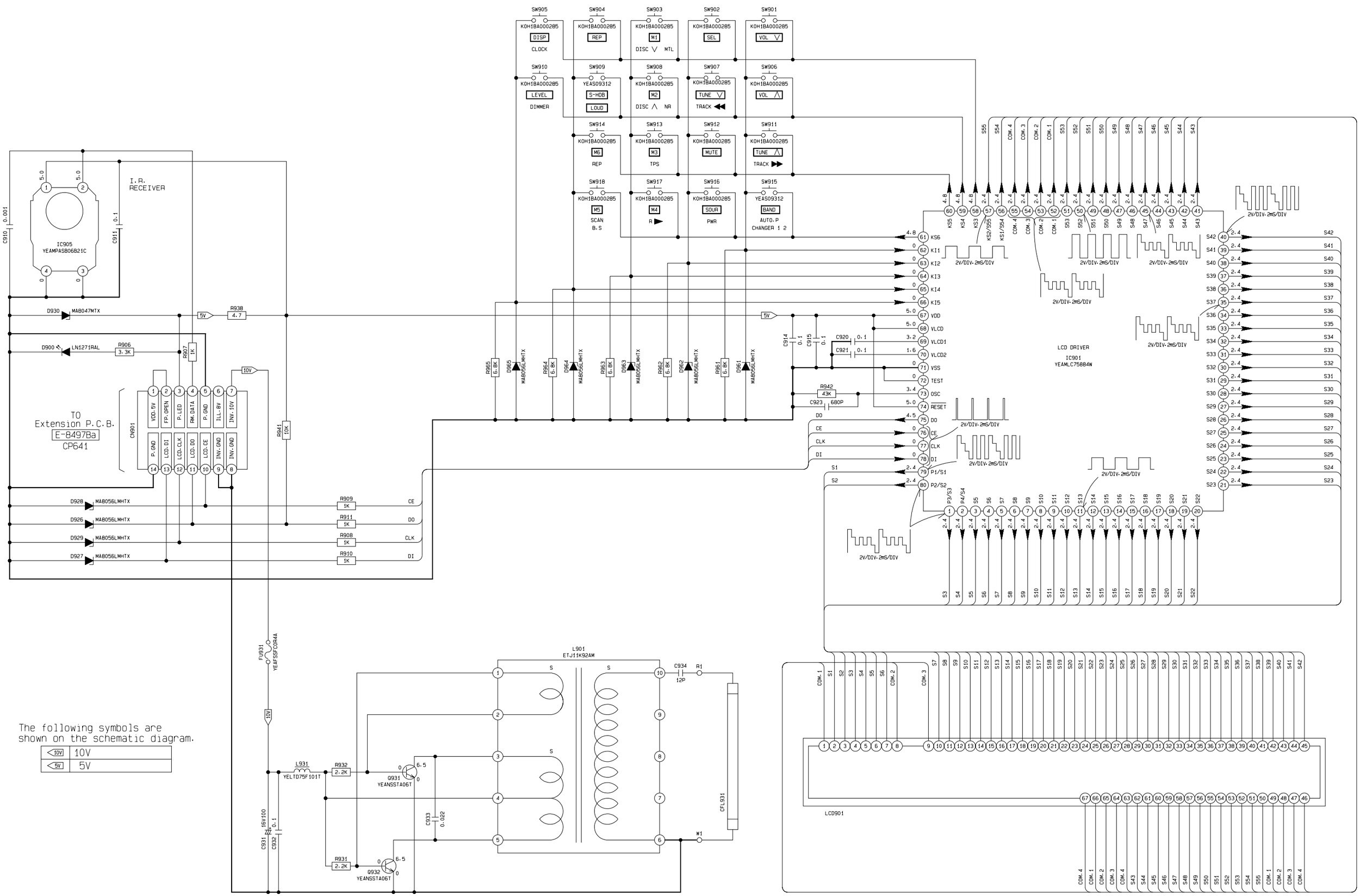

The following symbols are shown on the schematic diagram.

<10V	10V
<5V	5V

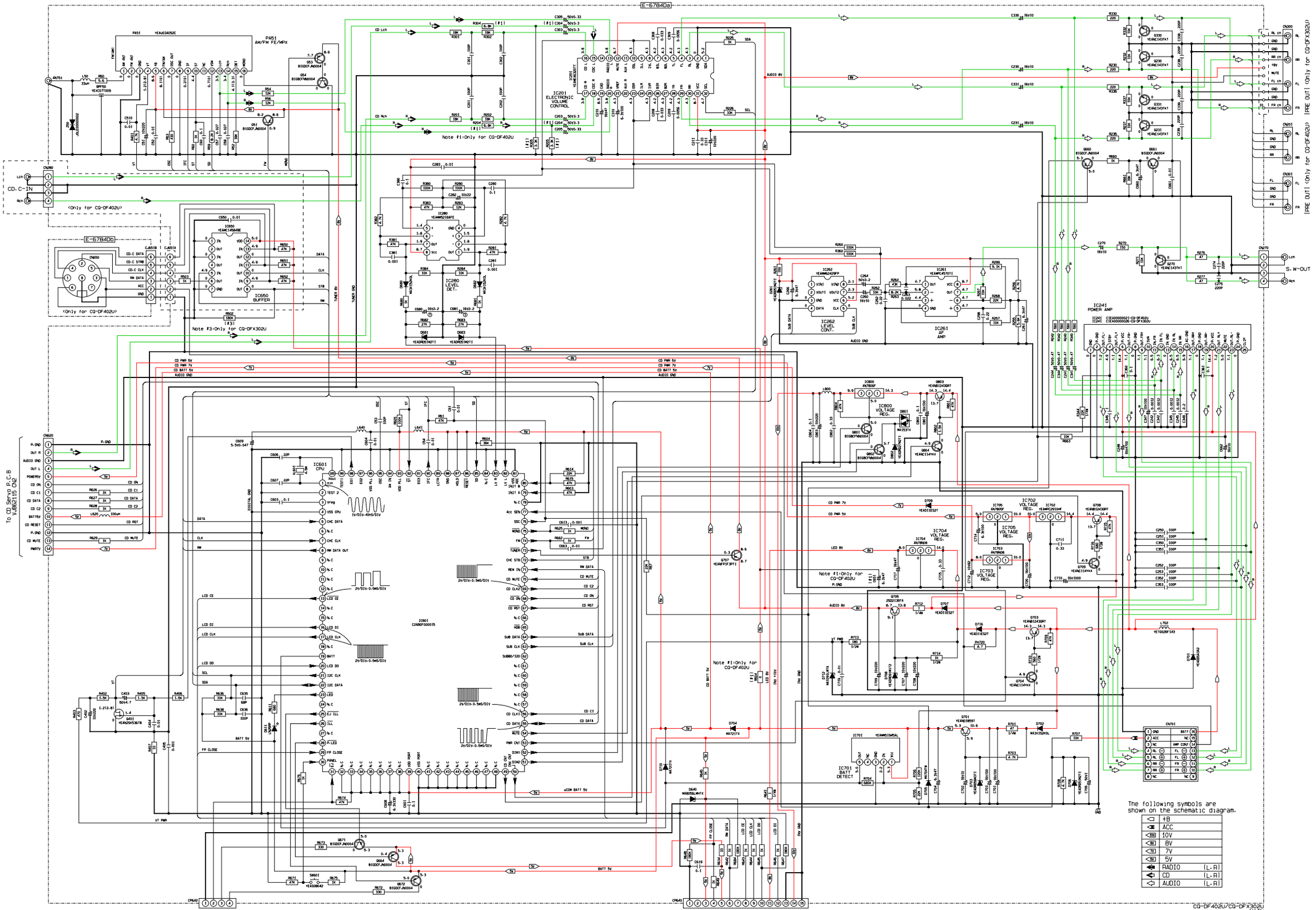

The following symbols are shown on the schematic diagram.

+B	
ACC	
10V	
8V	
7V	
5V	
RADIO	(L,R)
CD	(L,R)
AUDIO	(L,R)

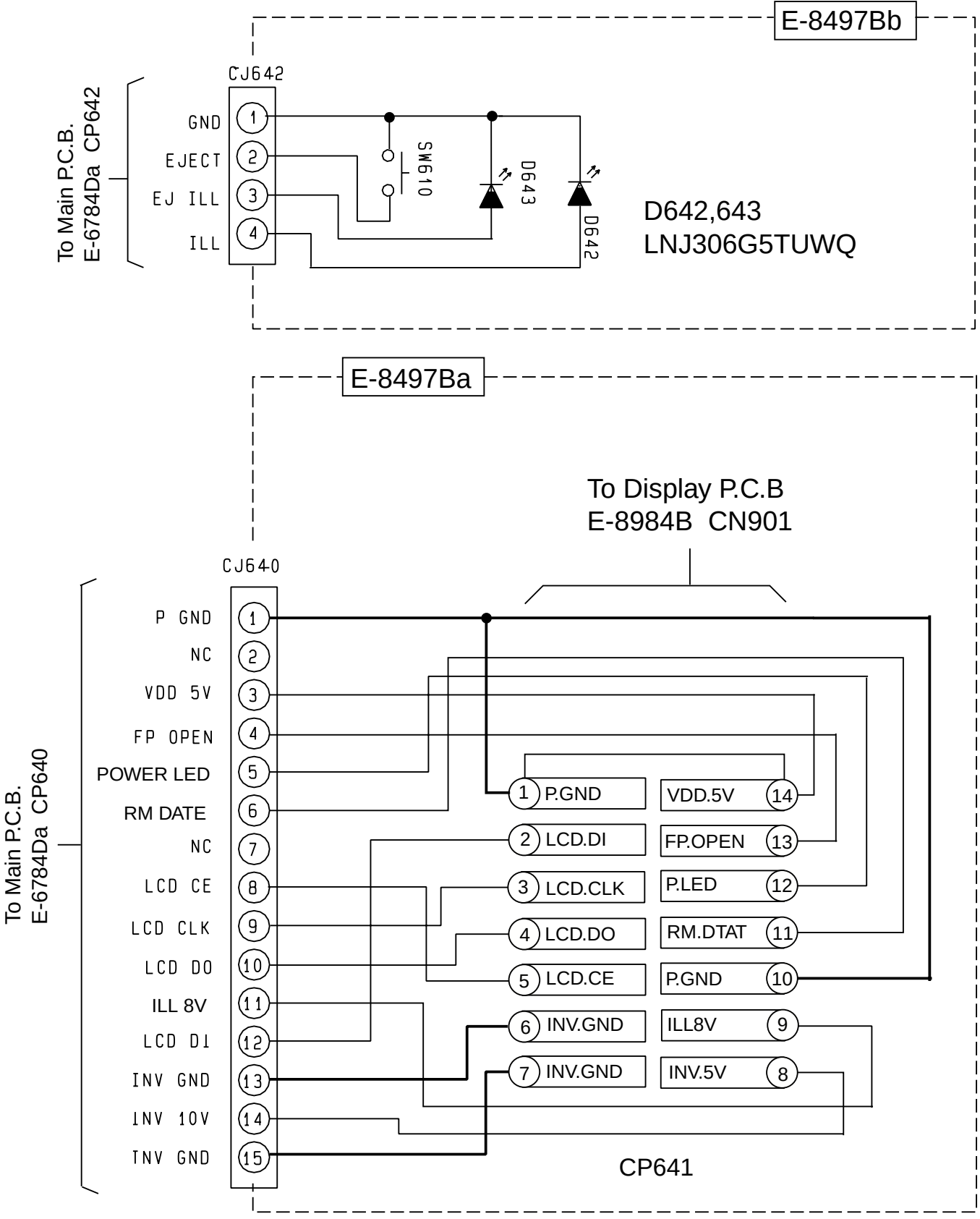
E-8497Bb
CJ642
To Main P.C.B.
E-6784Da CP642
GND
EJECT
EJ ILL
ILL
1
2
3
4
SW610
D643
D642
D642,643
LNJ306G5TUWQ
E-8497Ba
To Display P.C.B
E-8984B CN901
CJ640
To Main P.C.B.
E-6784Da CP640
P GND
NC
VDD 5V
FP OPEN
POWER LED
RM DATE
NC
LCD CE
LCD CLK
LCD DO
ILL 8V
LCD DI
INV GND
INV 10V
INV GND
1 P.GND
2 LCD.DI
3 LCD.CLK
4 LCD.DO
5 LCD.CE
6 INV.GND
7 INV.GND
VDD.5V 14
FP.OPEN 13
P.LED 12
RM.DTAT 11
P.GND 10
ILL8V 9
INV.5V 8
CP641

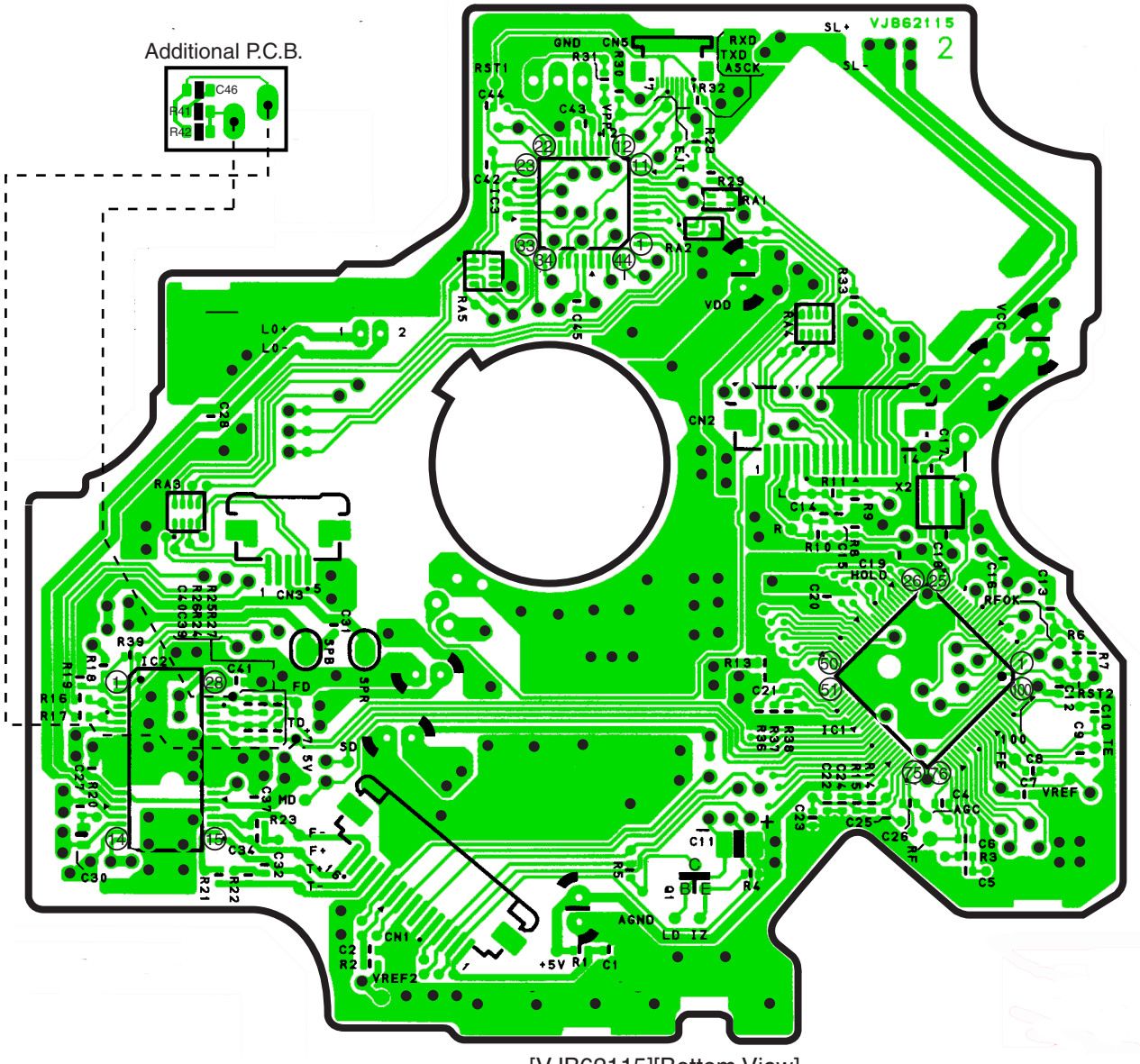

[VJB62115][Bottom View]

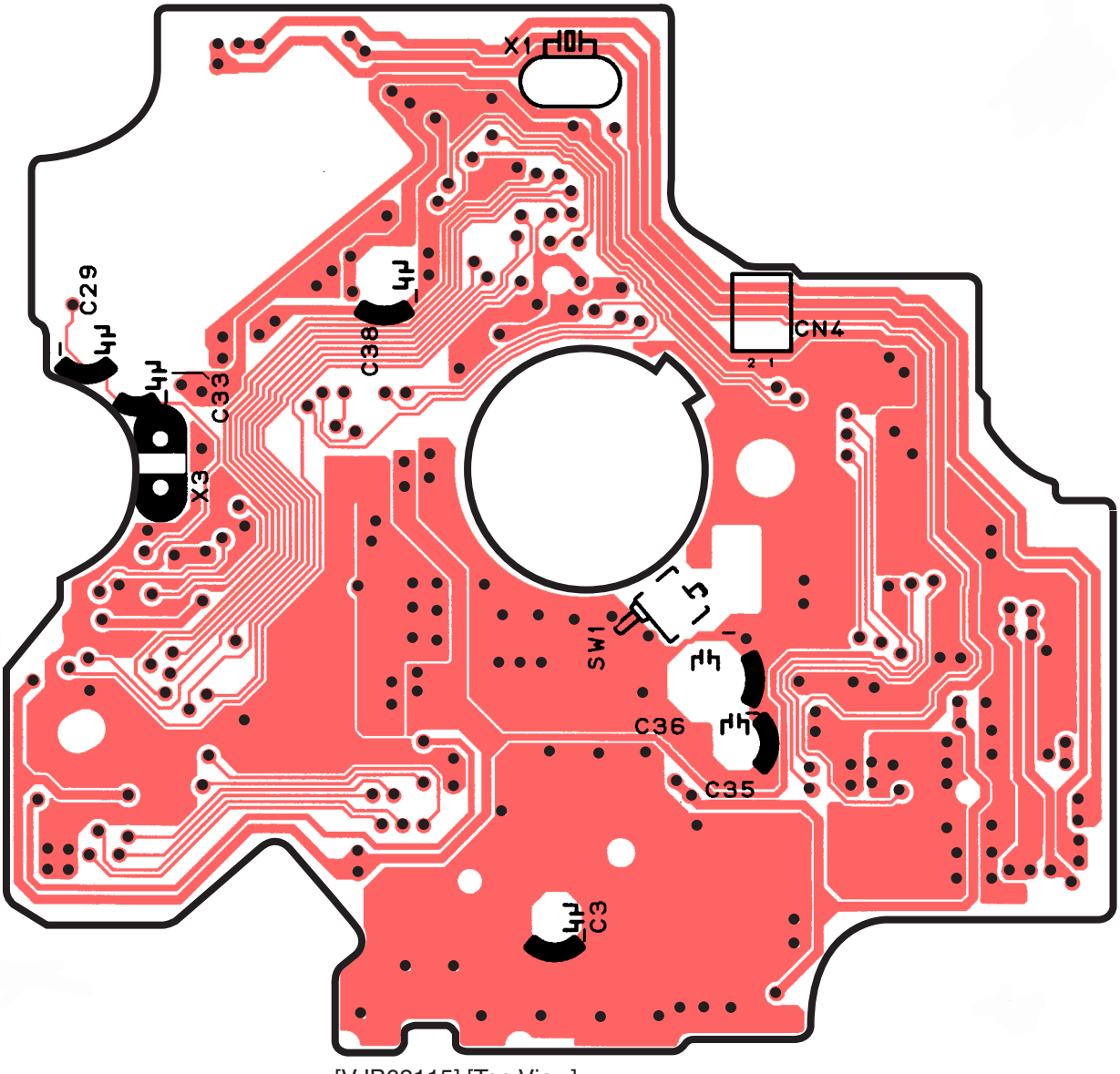

[VJB62115] [Top View]

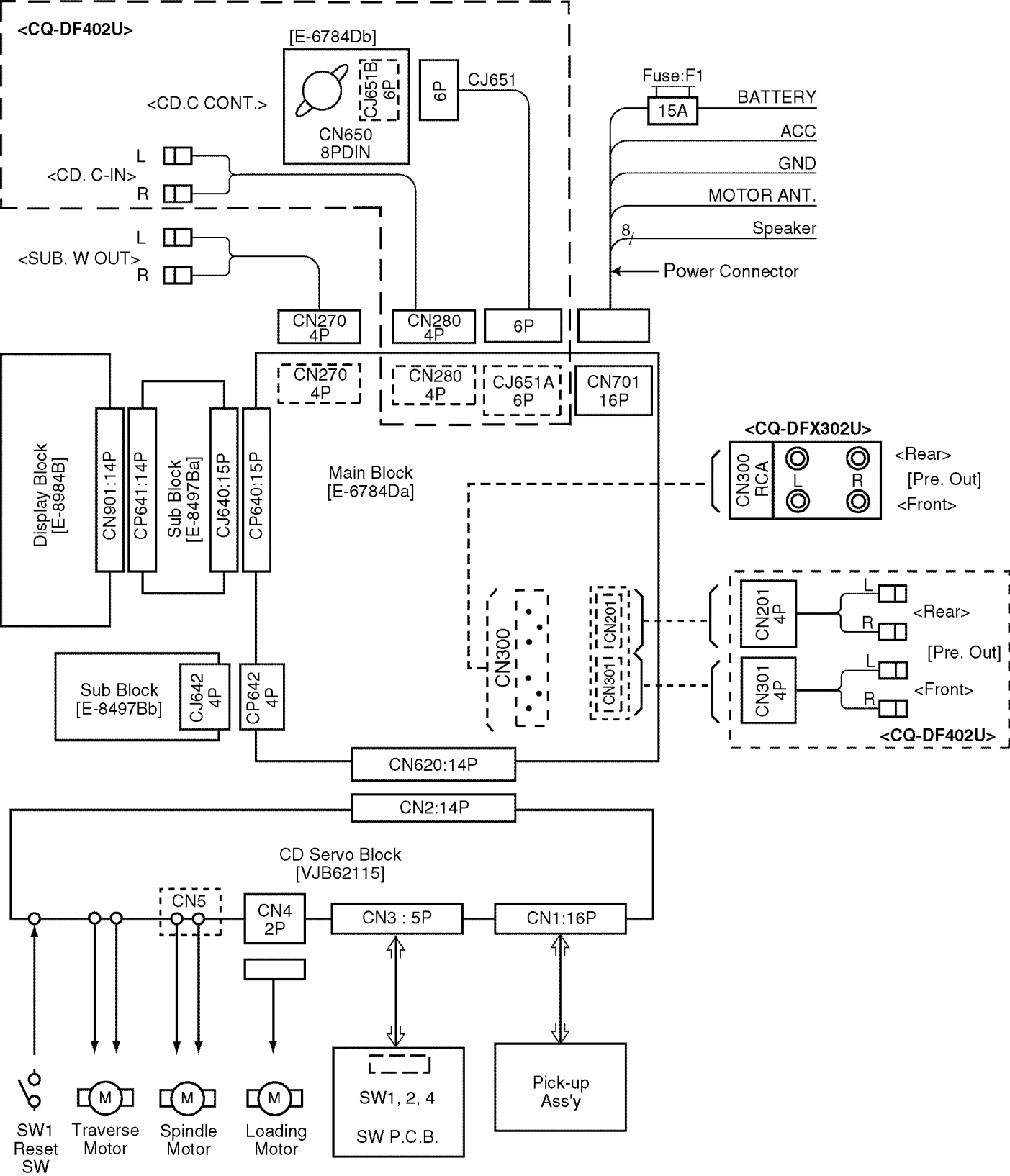

<Note> :

▭ ·····This mark shows a Ref. No. of connector

▭ ·····This mark shows a mounting position of connector.

[E-8984B]

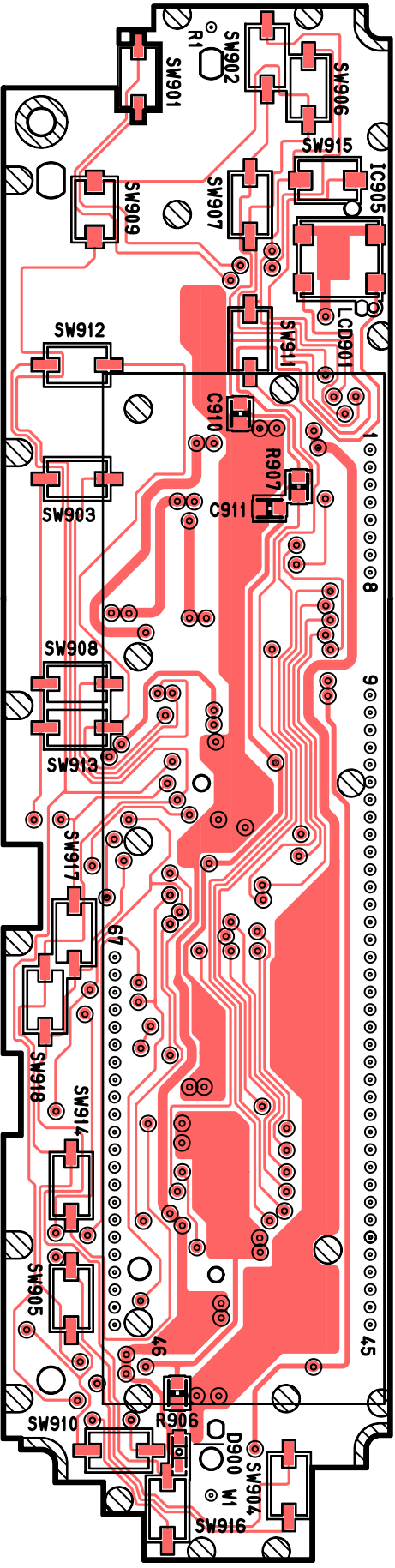

<Top View>

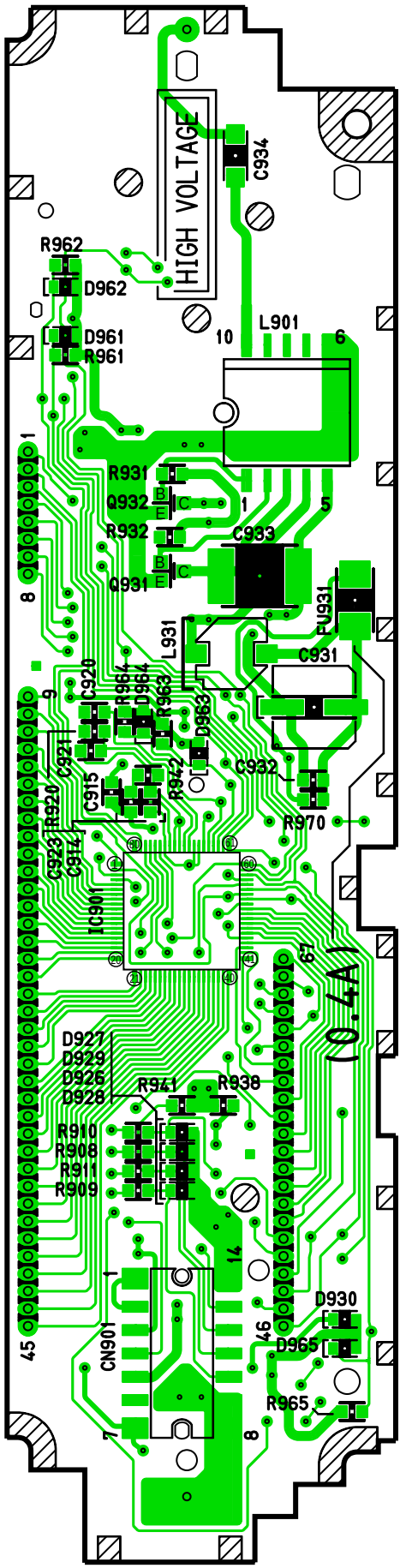

<Bottom View>

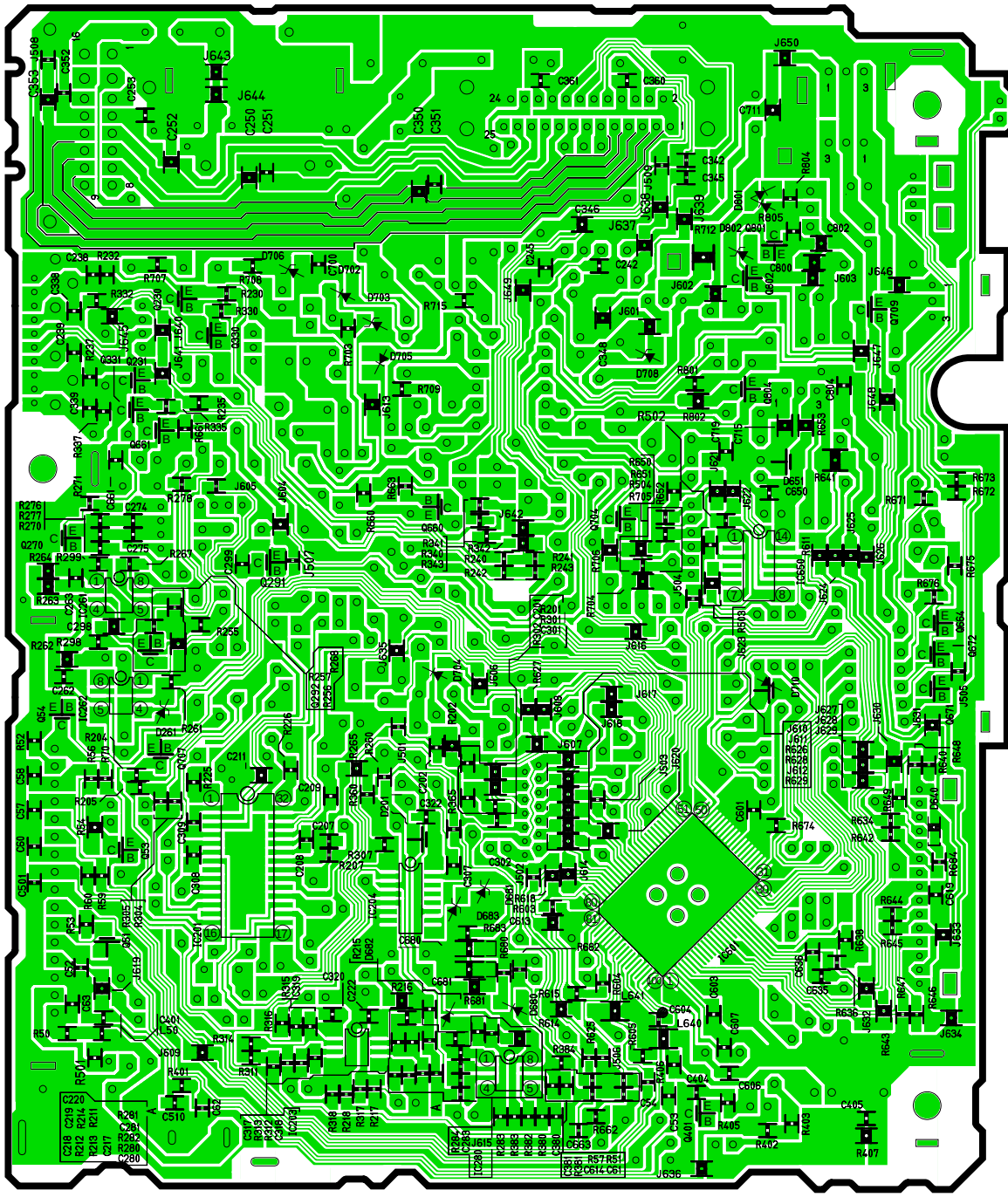

[E-6784Da][Bottom View]

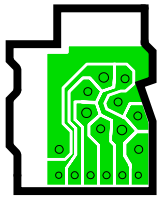

[E-6784Db]
[Bottom View]

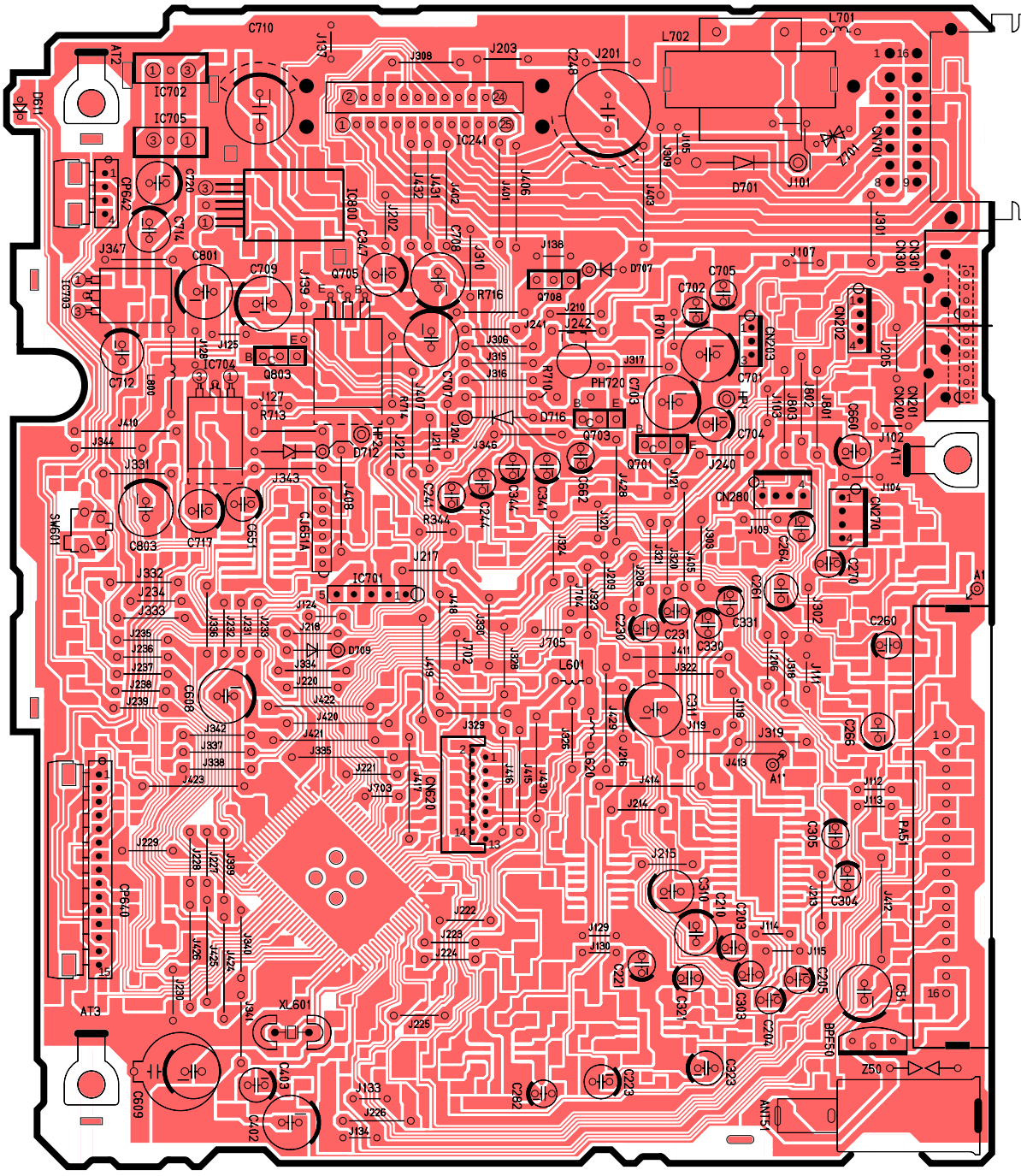

[E-6784Da][Top View]

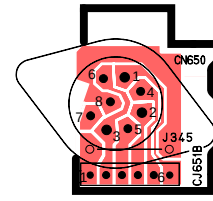

[E-6784Db]
[Top View]

[E-8497Bb]

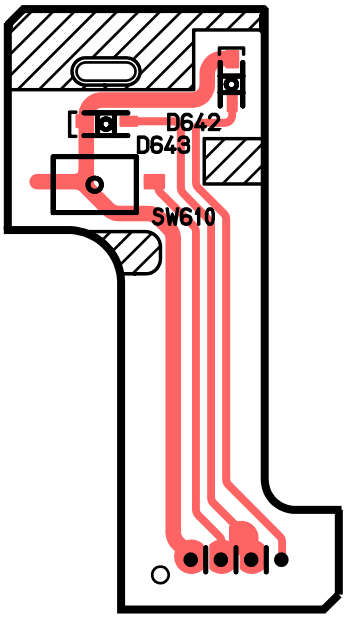

<TOP VIEW>

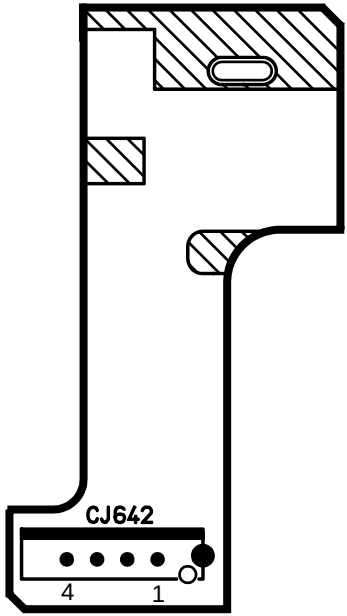

<BOTTOM VIEW>

[E-8497Ba]

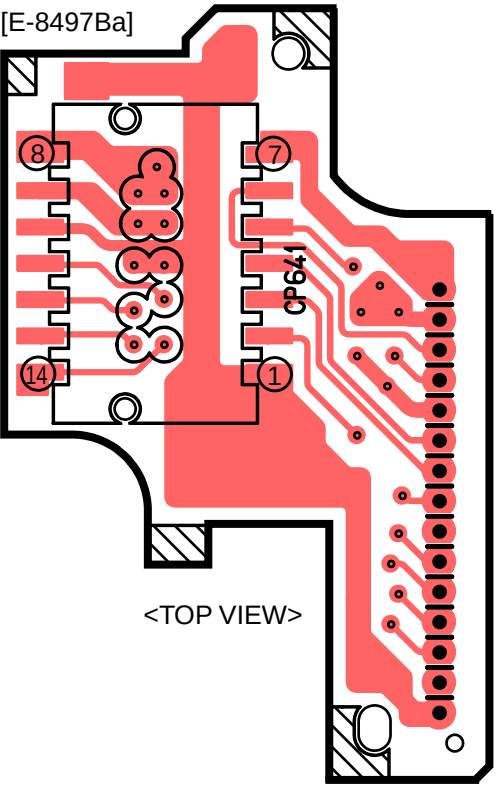

<TOP VIEW>

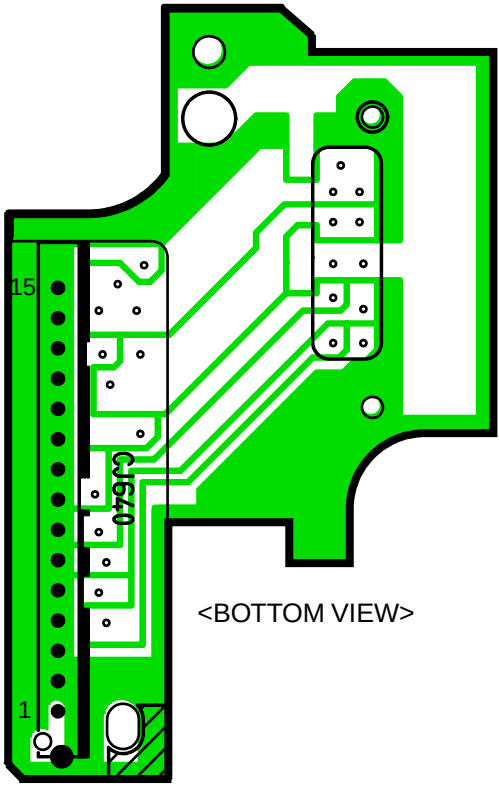

<BOTTOM VIEW>