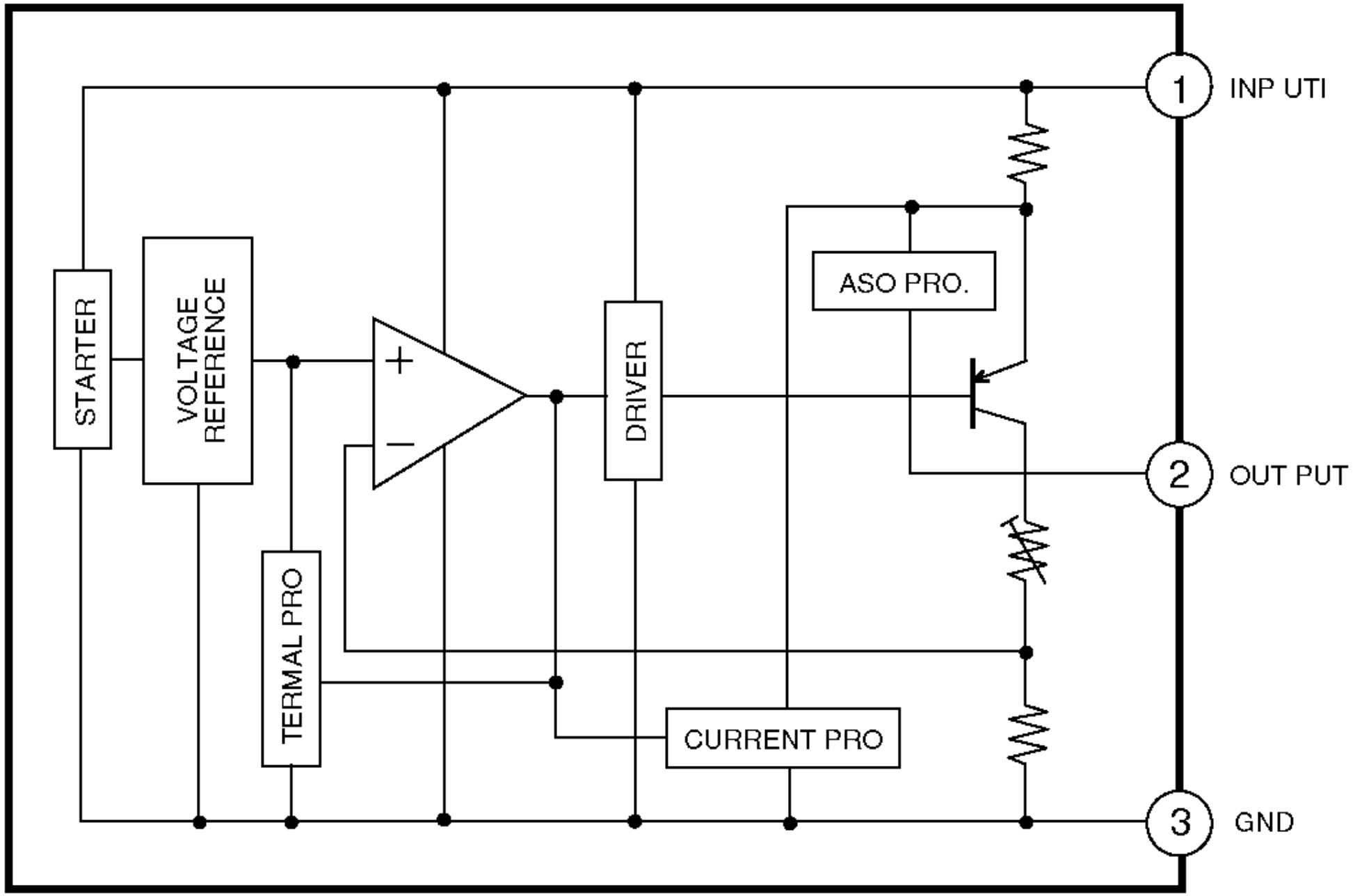
1
INP UTI
2
OUT PUT
3
GND
STARTER
VOLTAGE REFERENCE
TERMAL PRO
DRIVER
ASO PRO.
CURRENT PRO
+
−

PWR
TRACK / SEARCH
1
2
3
4
5
6
7
8
9
0
VOL
Panasonic
CAR DVD PLAYER / RECEIVER

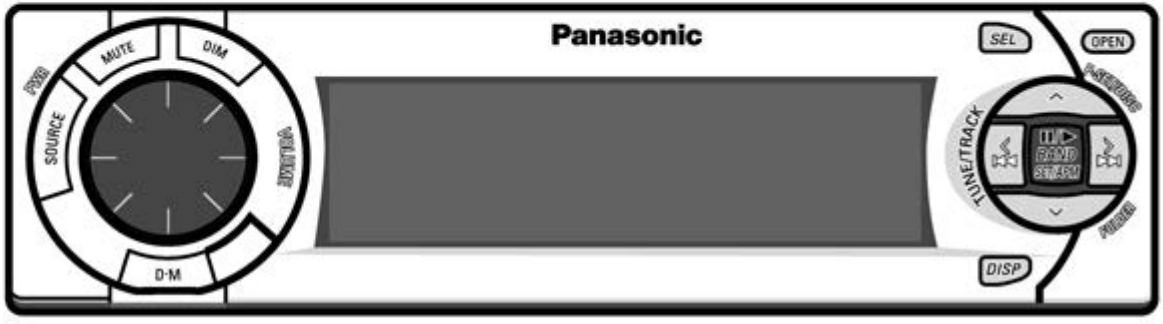
Panasonic
PWR
MUTE
DIM
SOURCE
VOLUME
D·M
SEL
OPEN
TUNE/TRACK
DISP

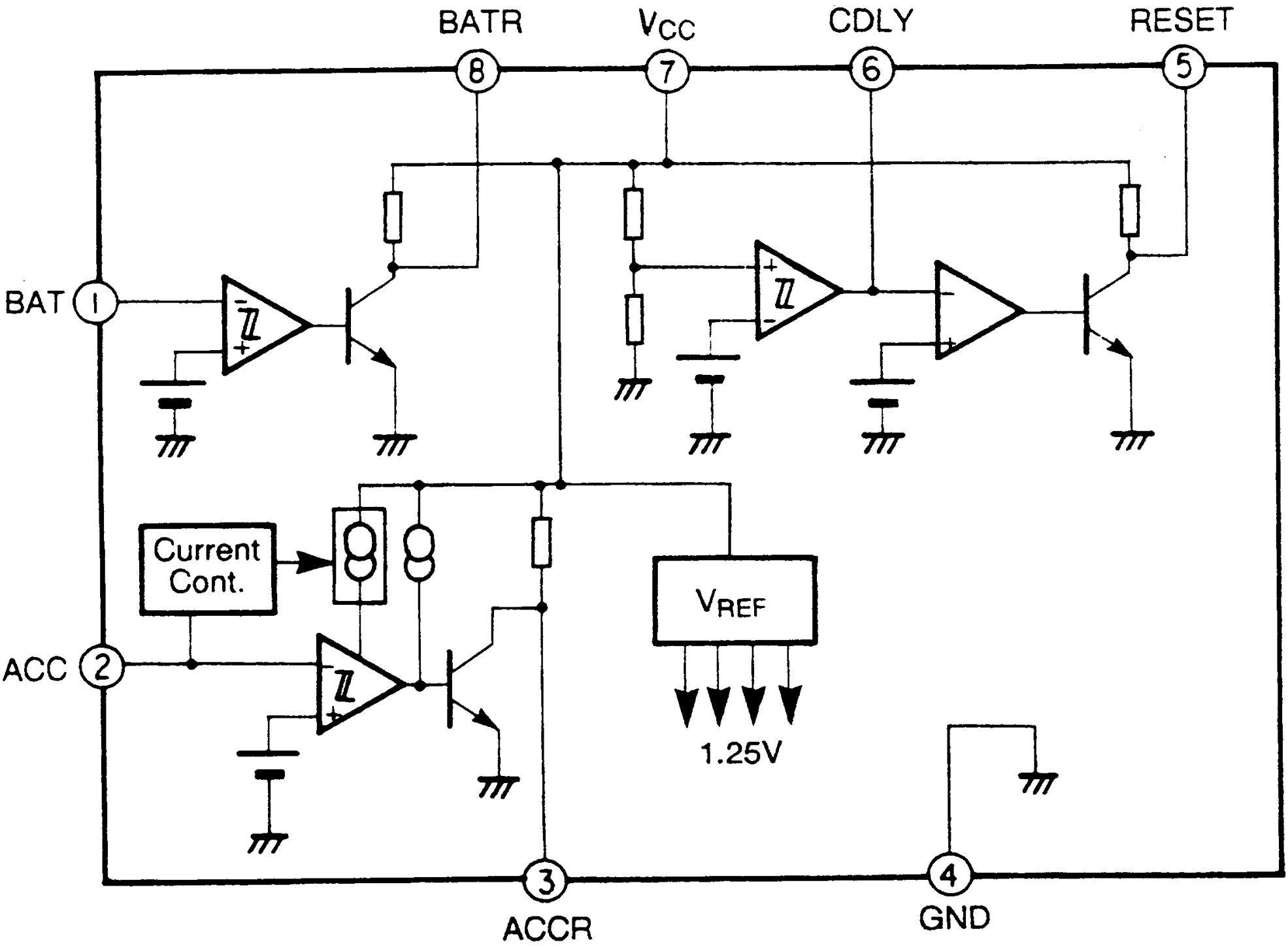
BATR
VCC
CDLY
RESET
8
7
6
5
BAT
1
ACC
2
Current
Cont.
VREF
1.25V
3
ACCR
4
GND

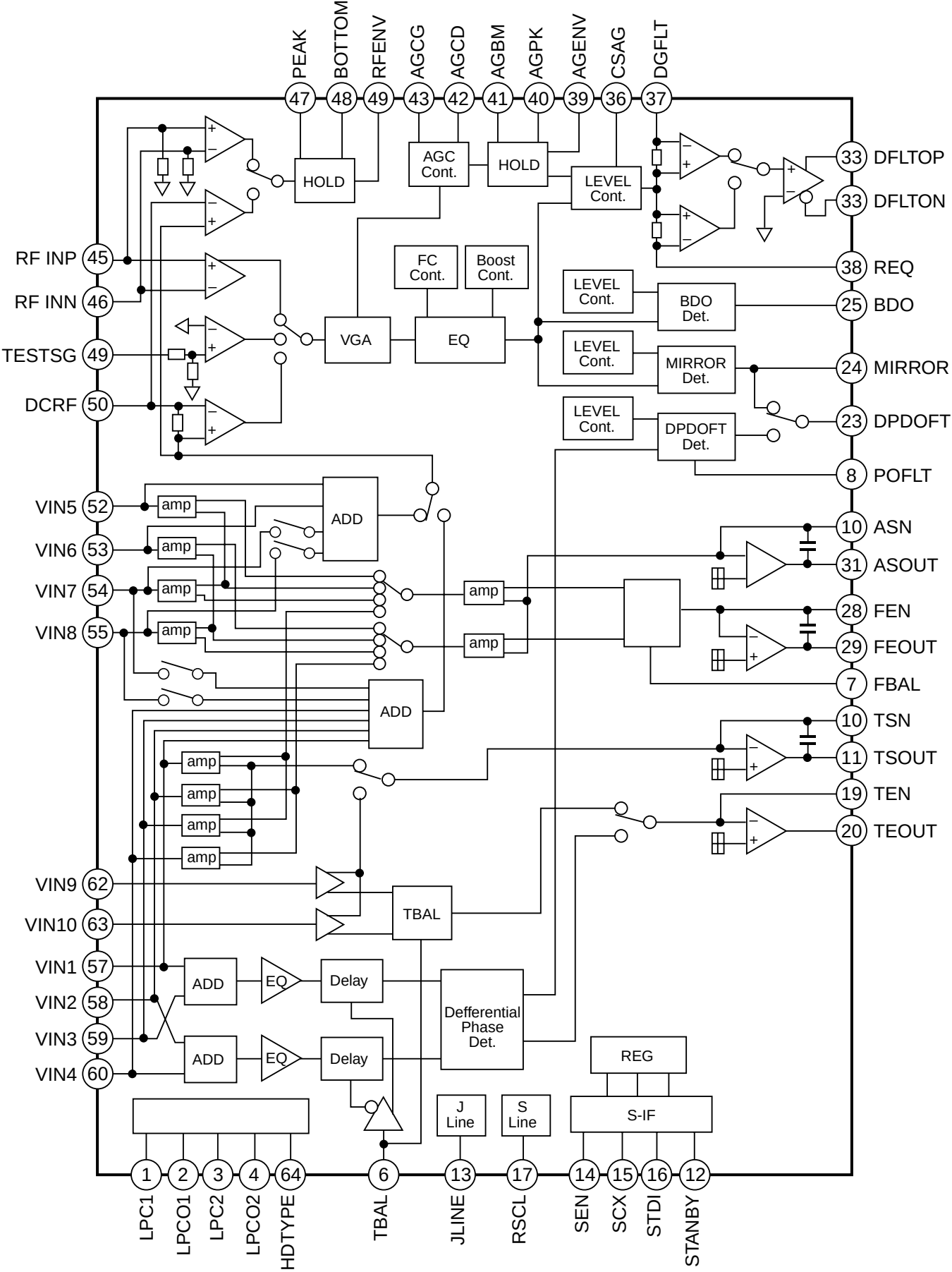
PEAK
BOTTOM
RFENV
AGCG
AGCD
AGBM
AGPK
AGENV
CSAG
DGFLT
47
48
49
43
42
41
40
39
36
37
HOLD
AGC Cont.
HOLD
LEVEL Cont.
33 DFLTOP
33 DFLTON
RF INP 45
RF INN 46
TESTSG 49
DCRF 50
FC Cont.
Boost Cont.
VGA
EQ
LEVEL Cont.
BDO Det.
38 REQ
25 BDO
LEVEL Cont.
MIRROR Det.
24 MIRROR
LEVEL Cont.
DPDOFT Det.
23 DPDOFT
8 POFLT
VIN5 52
VIN6 53
VIN7 54
VIN8 55
amp
ADD
10 ASN
31 ASOUT
28 FEN
29 FEOUT
7 FBAL
10 TSN
11 TSOUT
19 TEN
20 TEOUT
VIN9 62
VIN10 63
TBAL
VIN1 57
VIN2 58
VIN3 59
VIN4 60
EQ
Delay
Defferential Phase Det.
REG
S-IF
J Line
S Line
1
2
3
4
64
6
13
17
14
15
16
12
LPC1
LPCO1
LPC2
LPCO2
HDTYPE
TBAL
JLINE
RSCL
SEN
SCX
STDI
STANBY

CN301 L R CDC IN
ANT51
PA51
AM ANT
FM ANT
FM / AM TUNER
RA L
RA R
VT
Q53 LPF
Q51,52
Q50
EOFM
FM OSC
FM IF
MONO
FM/AM
ST
SD
IC51 PLL
PLL DATA
PLL COM
PLL CLK
PLL CE
IC208 AUDIO SELECT
IC209 BUFFER
IC210 AMP
IC502 AUDIO CODEC
ADC/ HPF
AUDIO I/F
BATT/ DAC/ LPF
CENT
SUBW
FL
FR
SL
SR
IC203 LPF
IC206 AMP
IC213 POWER AMP
IC201 LPF
IC204 AMP
IC212 POWER AMP
IC202 LPF
IC205 AMP
Q303(1/2)
Q303(2/2)
MUTE
CN203-1 CENTER
CN203-2 SUB W
Q202
CN201 FRONT
Q301
CN202 REAR
Q209,309
Q211,311
Q607-613
MUTE DELAY
IC501
96KHz DIR + DOLBY DIGITAL/ PRO LOGIC II/ DTS DECODER + SUB DSP
DOIND
PCM D0
PCM D1
PCM D2
PCM DATA
DIR LRCK
DIR BCK
DIR MCK
DFS
ICN
Q502
Q501
SEL-B
SEL-A
DIR SDO
OBFB
DSP SO
DSP SI
DSP SCK
DSP CS
CDTI
CCLK
CSN
D MUTE
IC211 POWER AMP
CLIP
AMP STBY
MUTE
Q605
Q606,607
MUTE CONT
DET CNT
AMP MUTE
FL +
FL -
FR +
FR -
RL +
RL -
RR +
RR -
SYS MUTE W
SYS MUTE C
SYS MUTE F
SYS MUTE S
IC601(1/2)
MAIN CPU
CN302 L R AUX IN
Q214,314
LEVEL CONT
LEV CNT
V CNT
V SEL
AJ795 VIDEO CNT
Q603,604
VCNT
POWER CONT
PON12V
IC503
BPF
OPT CNT
IC101
5V to 3V
IC102
3V to 5V
Q112
Q111
CN180 VIDEO OUT
75Ω 6dB
IC180 VIDEO AMP
VIDEO OUT
OPT IN
DVD 5V
DVD 3.3V
DVD 1.8V
DVD 3V
DVD 10V
DVD DI
DVD DO
DVD MUTE
DVD RST
CN101
To E-9179C CN2
CN701
FL +/-,FR +/-,RL +/-,RR +/-
Q616
CH 1/2
Q601
NAVI MUTE
Q602
PKB
Q707,708
ANT CNT
BATT
ACC
ANP CNT
AMP CNT
Q705,706

E-6974Ab

E-6974Aa(2/2)

E-9269A

CN601

CN602

CN604 12 11 13 14 3 5 9 1 2

CN603

CN901

SW804

SW803

SW801

D804

Q801

D801

SYS 5V

RESET

VPP

VDD 5V

IC603 BATT/ACC CHECK,RESET

ACC

BATT

ACC SENS

BATT SENS

OPEN/CLOSE

DVD ILL

DVD EJ

Q615

BZ701

Q618

BEEP

IC601(2/2)

MAIN CPU

IC602

SERIAL FRAM

RAM DO

RAM DI

RAM CS

RAM CLK

RAM WP

RAM HOLD

IC605,606

3V To 5V

FAN

CN702

Q701,702

FAN DRIVE

FAN CNT

PON12V

CN601

CH-CONTROL

IC604

CHC DATA

CHC REMO

CHC CLK

CHC STB

CHC ADP

Q755

5V REG

IC760

6V REG

IC759

10V REG

PON 5V

M PWR

IC756

3.3V REG

DSP 3.3V

AU 10V

IC757

2.5V REG

DSP 2.5V

Q703,704

POWER CONT

PON 12V

S PWR

IC53

SYS 5V

Q56,57

IC52

8V REG

Q58,59

RA 8V

RAD CNT

Q62

VT 8V

Q60,61

Q753,754

IC753

8V REG

IC754

SW REG

DISP PWR

IC752

DIMMER POWER

INV 10V

Q751,752

DIMMER CONT

DIM1

DIM2

Q709

5V REG

VDD 5V

IC701

3.3V REG

VDD 3.3V

IC105

10V REG

DVD 10V

DVD CNT

Q106,107

VCC

IC103

DC/DC CONV. CONT

OUT1

DLY

OUT2

Q103,105

ON/OFF DRIVE

DVD 5V

Q104

CURRENT DET

Q108

Q101

FREQ SHIFT

SEL C

Q109,110

DVD 3.3V

IC104

1.8V REG

DVD 1.8V

Q901,902

POWER CONT

IC904

3.3V REG

SUB 5V

SUB 3.3V

SUB RST

IC900

SUB CPU

FW TX

FW RX

PCW DET

SUB SI

SUB SO

MWU REQ

Q903

SWU REQ

LCD 16V

IC903

IR RECEIVE

REMO IN

SW904 (POWER)

KI1

IC902

RESET

SUB 5V

SW901

VOL UP

VOL DN

ROTARY ENCODER

Q908

LCD CONT

D903

IC901

FLASH MEMORY

WE

WP

F RESET

RY-BY

A1–22

D0–15

D0–7

CE

OE

Q906

A1

CE/CS

OE/RD

WR

LCD RST

Q915,916

POWER CONT

V OUT

VLCD CONT

SW902,903,905–912

KEY IN MATRIX

KS1–3

KI2–5

CN902

SUB 3.3V

To LCD901

SW913,914

OSC

CFL901

CQ-D7400W MAIN(2/2)/DISPLAY

Printed in Japan 2003.10 (K) (Recycled Paper)

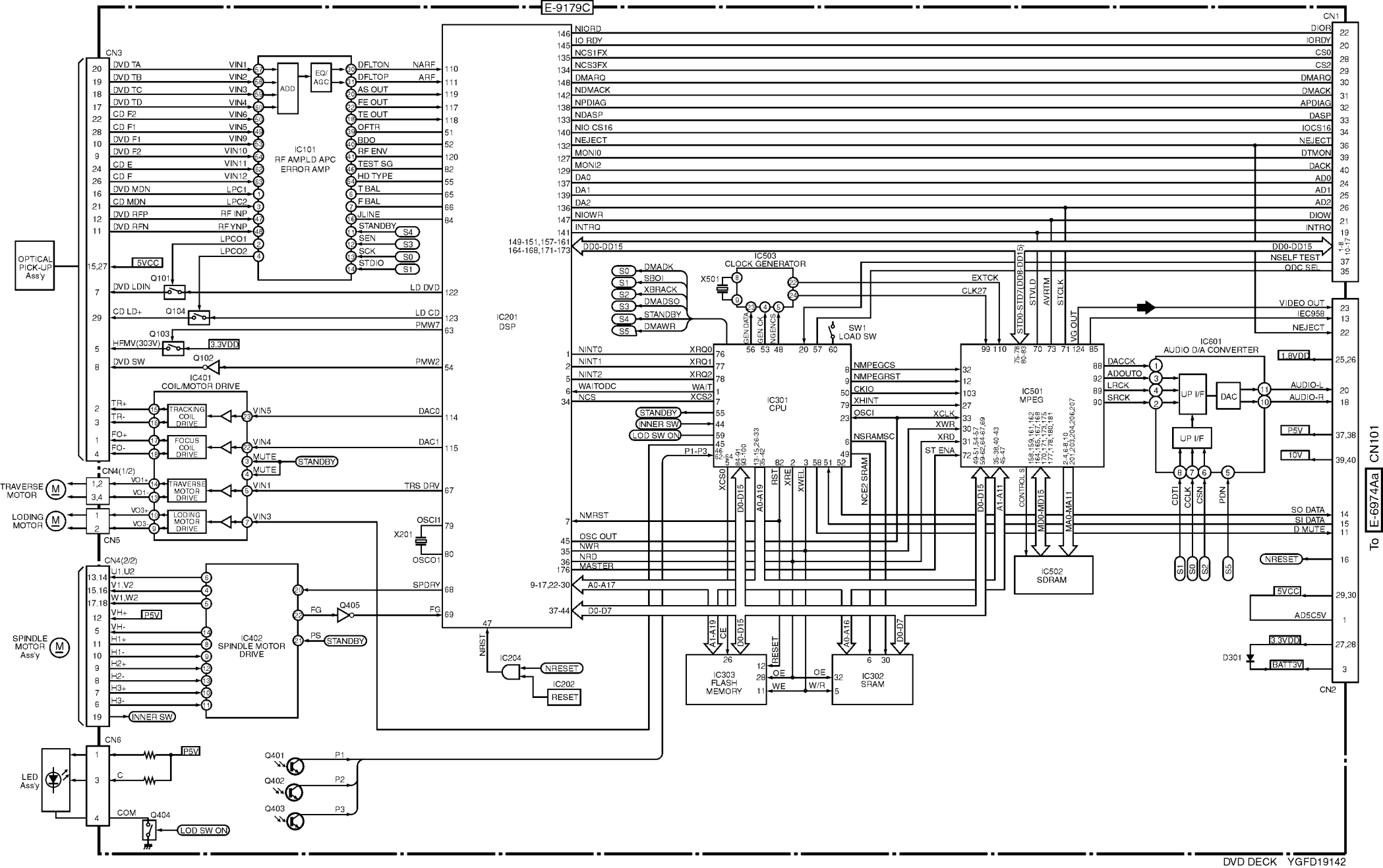
E-9179C
CN3
DVD TA
DVD TB
DVD TC
DVD TD
CD F2
CD F1
DVD F1
DVD F2
CD E
CD F
DVD MDN
CD MDN
DVD RFP
DVD RFN
VIN1
VIN2
VIN3
VIN4
VIN6
VIN5
VIN9
VIN10
VIN11
VIN12
LPC1
LPC2
RF INP
RF YNP
LPCO1
LPCO2
ADD
EQ/ AGC
IC101
RF AMP/LD APC
ERROR AMP
DFLTON
DFLTOP
AS OUT
FE OUT
TE OUT
OFTR
BDO
RF ENV
TEST SG
HD TYPE
T BAL
F BAL
JLINE
STANDBY
SEN
SCK
STDIO
NARF
ARF
S4
S3
S0
S1
OPTICAL PICK-UP Ass'y
5VCC
Q101
DVD LDIN
LD DVD
CD LD+
Q104
LD CD
PMW7
Q103
HFMV(303V)
3.3VDD
DVD SW
Q102
PMW2
IC401
COIL/MOTOR DRIVE
TR+
TR-
FO+
FO-
TRACKING COIL DRIVE
FOCUS COIL DRIVE
VIN5
VIN4
DAC0
DAC1
MUTE
STANDBY
CN4(1/2)
TRAVERSE MOTOR
VO1+
VO1-
TRAVERSE MOTOR DRIVE
VIN1
TRS DRV
LODING MOTOR
VO3+
VO3-
LODING MOTOR DRIVE
VIN3
CN5
OSCI1
X201
OSCO1
CN4(2/2)
U1,U2
V1,V2
W1,W2
VH+
P5V
VH-
H1+
H1-
H2+
H2-
H3+
H3-
INNER SW
SPINDLE MOTOR Ass'y
IC402
SPINDLE MOTOR DRIVE
SPDRY
FG
Q405
PS
STANDBY
CN6
LED Ass'y
C
COM
Q404
LOD SW ON
Q401
Q402
Q403
P1
P2
P3
IC201
DSP
NIORD
IO RDY
NCS1FX
NCS3FX
DMARQ
NDMACK
NPDIAG
NDASP
NIO CS16
NEJECT
MONI0
MONI2
DA0
DA1
DA2
NIOWR
INTRQ
DD0-DD15
149-151,157-161
164-168,171-173
IC503
CLOCK GENERATOR
X501
EXTCK
CLK27
DMADK
SBOI
XBRACK
DMADSO
STANDBY
DMAWR
GEN DATA
GEN CK
XGENCS
SW1
LOAD SW
STD0-STD7(DD8-DD15)
STVLD
AVRTM
STCLK
VG OUT
NINT0
NINT1
NINT2
WAITODC
NCS
XRQ0
XRQ1
XRQ2
WAIT
XCS2
IC301
CPU
STANDBY
NNER SW
LOD SW ON
P1-P3
XCS0
D0-D15
A0-A19
RST
XRE
XWEL
NCE2 SRAM
NMPEGCS
NMPEGRST
CKIO
XHINT
OSCI
XCLK
XWR
XRD
NSRAMSC
ST ENA
IC501
MPEG
CONTROL S
MD0-MD15
MA0-MA11
IC502
SDRAM
D0-D15
A1-A11
NMRST
OSC OUT
NWR
NRD
MASTER
A0-A17
D0-D7
NRST
IC204
NRESET
IC202
RESET
A1-A19
CE
OE
WE
IC303
FLASH MEMORY
A0-A16
RESET
OE
W/R
IC302
SRAM
IC601
AUDIO D/A CONVERTER
DACCK
ADOUTO
LRCK
SRCK
UP I/F
DAC
AUDIO-L
AUDIO-R
CDTI
CCLK
CSN
PDN
S1
S0
S2
S5
1.8VDD
P5V
10V
SO DATA
SI DATA
D MUTE
NRESET
5VCC
AD5C5V
3.3VDD
D301
BATT3V
CN2
CN1
DIOR
IORDY
CS0
CS2
DMARQ
DMACK
APDIAG
DASP
IOCS16
NEJECT
DTMON
DACK
AD0
AD1
AD2
DIOW
INTRQ
DD0-DD15
NSELF TEST
ODC SEL
VIDEO OUT
IEC958
NEJECT
To E-6974Aa CN101

■How to remove the escutcheon ass'y

1. Remove the screw (☆).

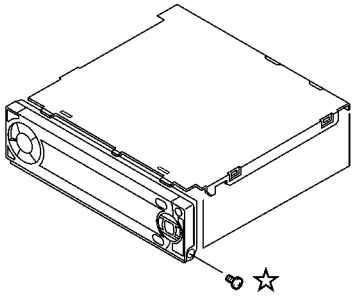

2. Open the escutcheon ass'y by pressing the open button.

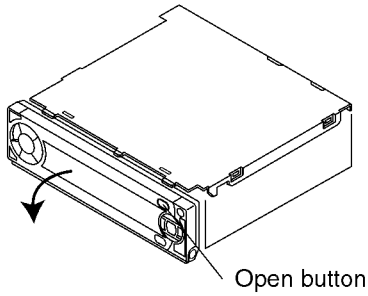

3. Remove the rear FPC cover of escutcheon ass'y.

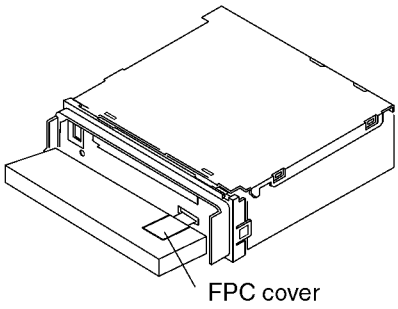

4. Remove the flexible PCB(CJ603) from CN901.

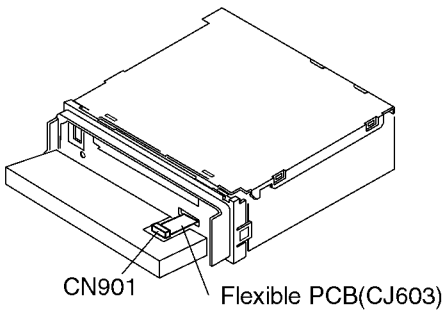

5. Remove the escutcheon ass'y by pushing it lightly to the arrow direction.

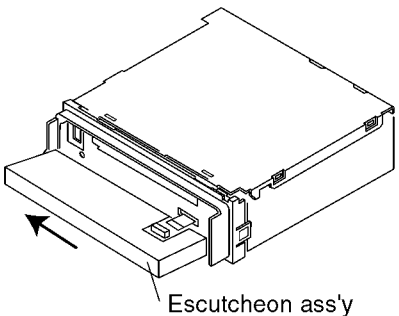

■How to remove the deck shield case

1. Unhook three hooks (◎) of the lower shield case by detaching it with the slotted screwdriver and then remove the case.

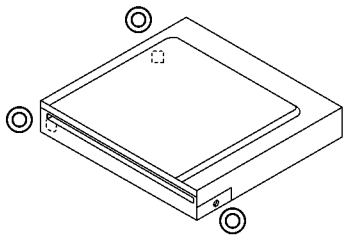

2. The DVD deck is mounted at the upper shield case by three adhesive pads (★).

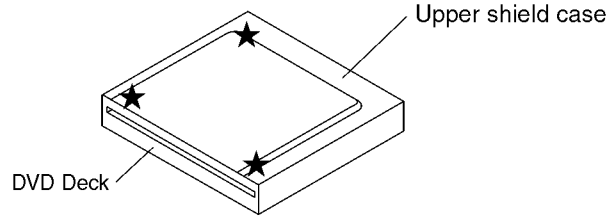

3. Insert the slotted screwdriver between the DVD deck and one of the three pads (★) and gently separate them. Also separate the other pads (★) similarly. (Inserting it roughly may cause the case to change the shape.)

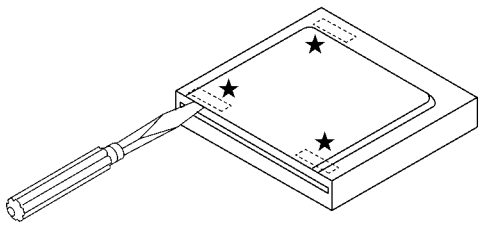

4. Remove the upper shield case from the DVD deck, separating them with your fingers so that the DVD deck does not adhere to the pads again.

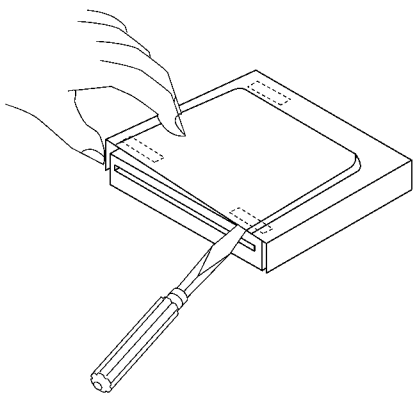

* Three pads (★) should be replaced with new ones after removing the deck shield case.

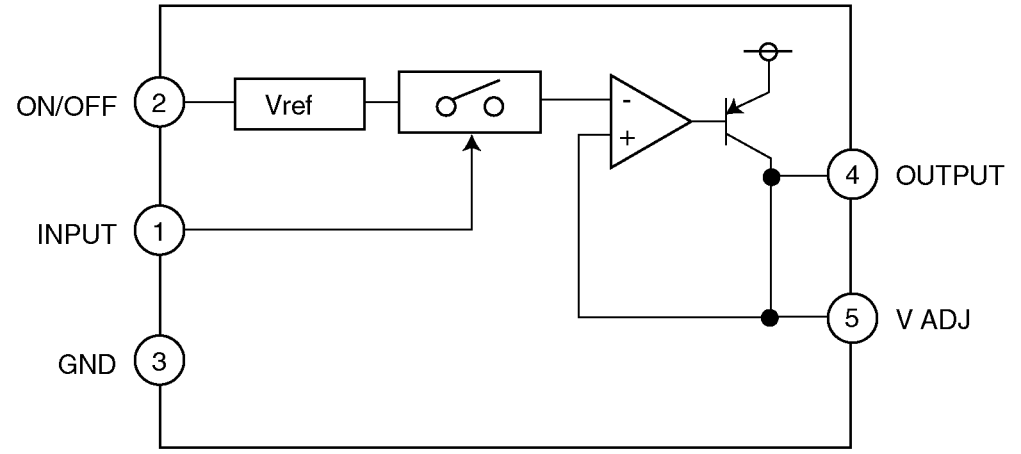
ON/OFF
2
Vref
INPUT
1
GND
3
-
+
4
OUTPUT
5
V ADJ

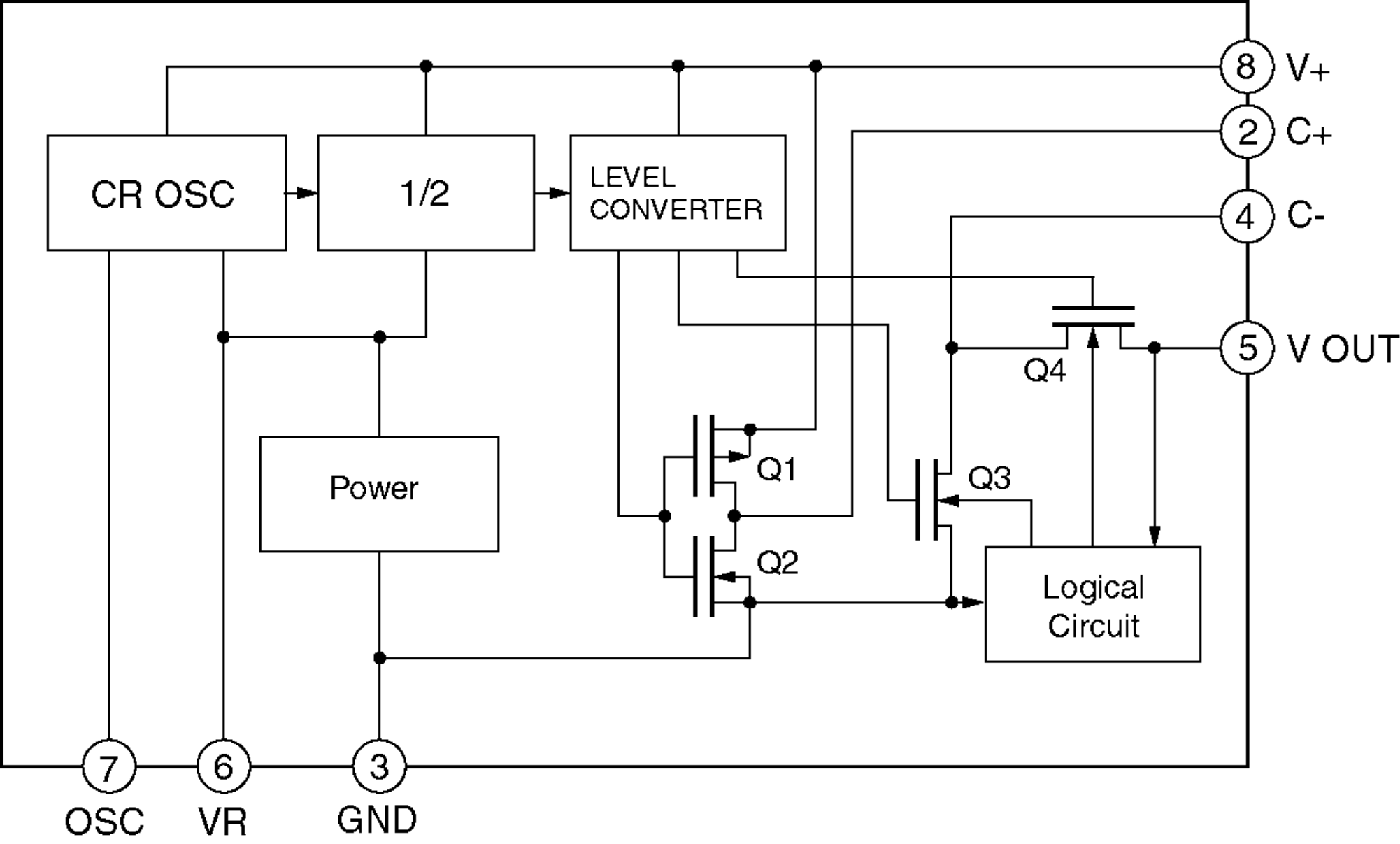
CR OSC
1/2
LEVEL
CONVERTER
Power
Q1
Q2
Q3
Q4
Logical
Circuit
8
V+
2
C+
4
C-
5
V OUT
7
OSC
6
VR
3
GND

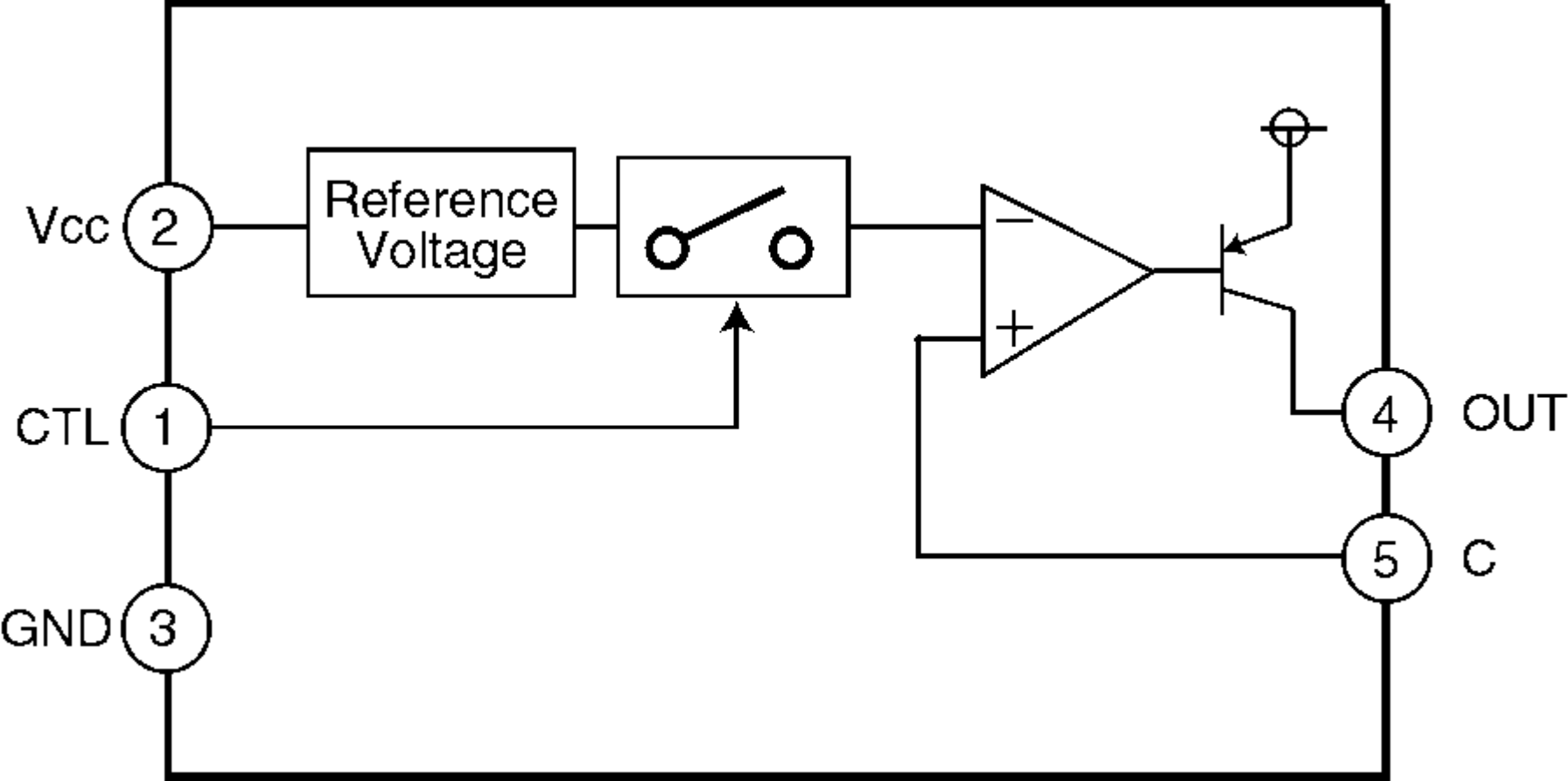
Vcc
2
Reference
Voltage
CTL
1
GND
3
4
OUT
5
C

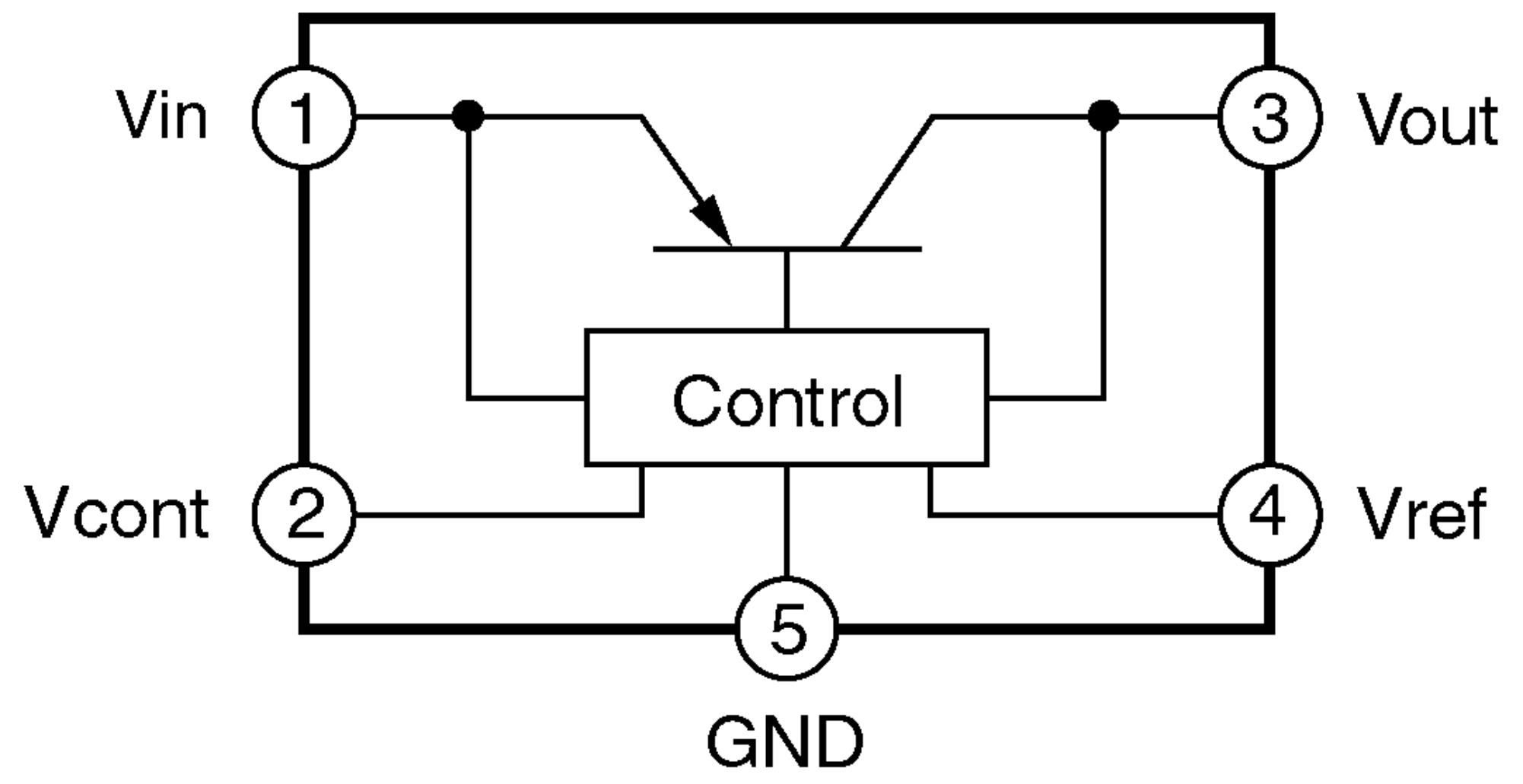
Vin
1
3
Vout
Control
Vcont
2
4
Vref
5
GND

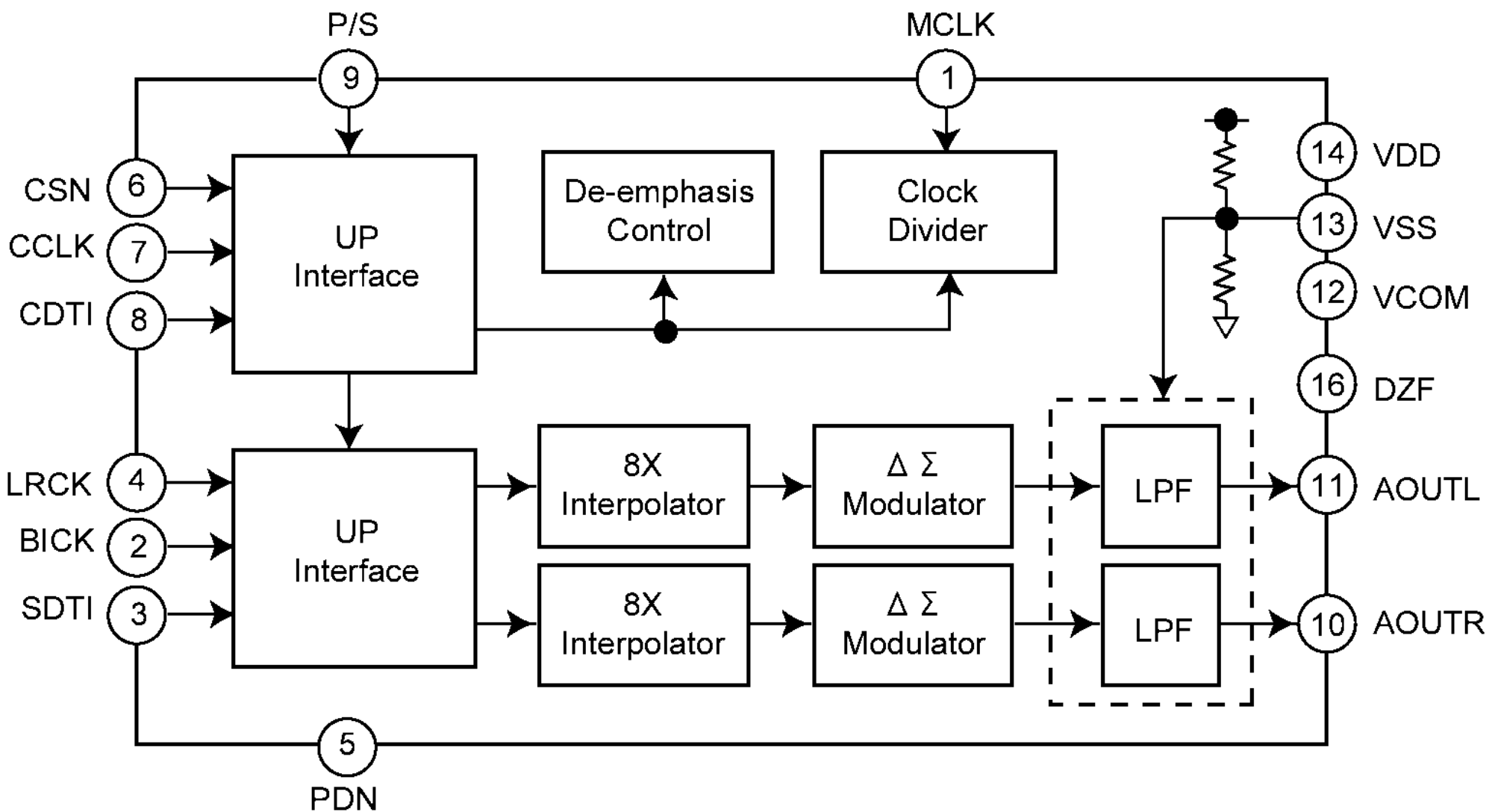
P/S
9
MCLK
1
CSN
6
CCLK
7
CDTI
8
UP
Interface
De-emphasis
Control
Clock
Divider
14
VDD
13
VSS
12
VCOM
16
DZF
LRCK
4
BICK
2
SDTI
3
UP
Interface
8X
Interpolator
8X
Interpolator
Δ Σ
Modulator
Δ Σ
Modulator
LPF
LPF
11
AOUTL
10
AOUTR
5
PDN

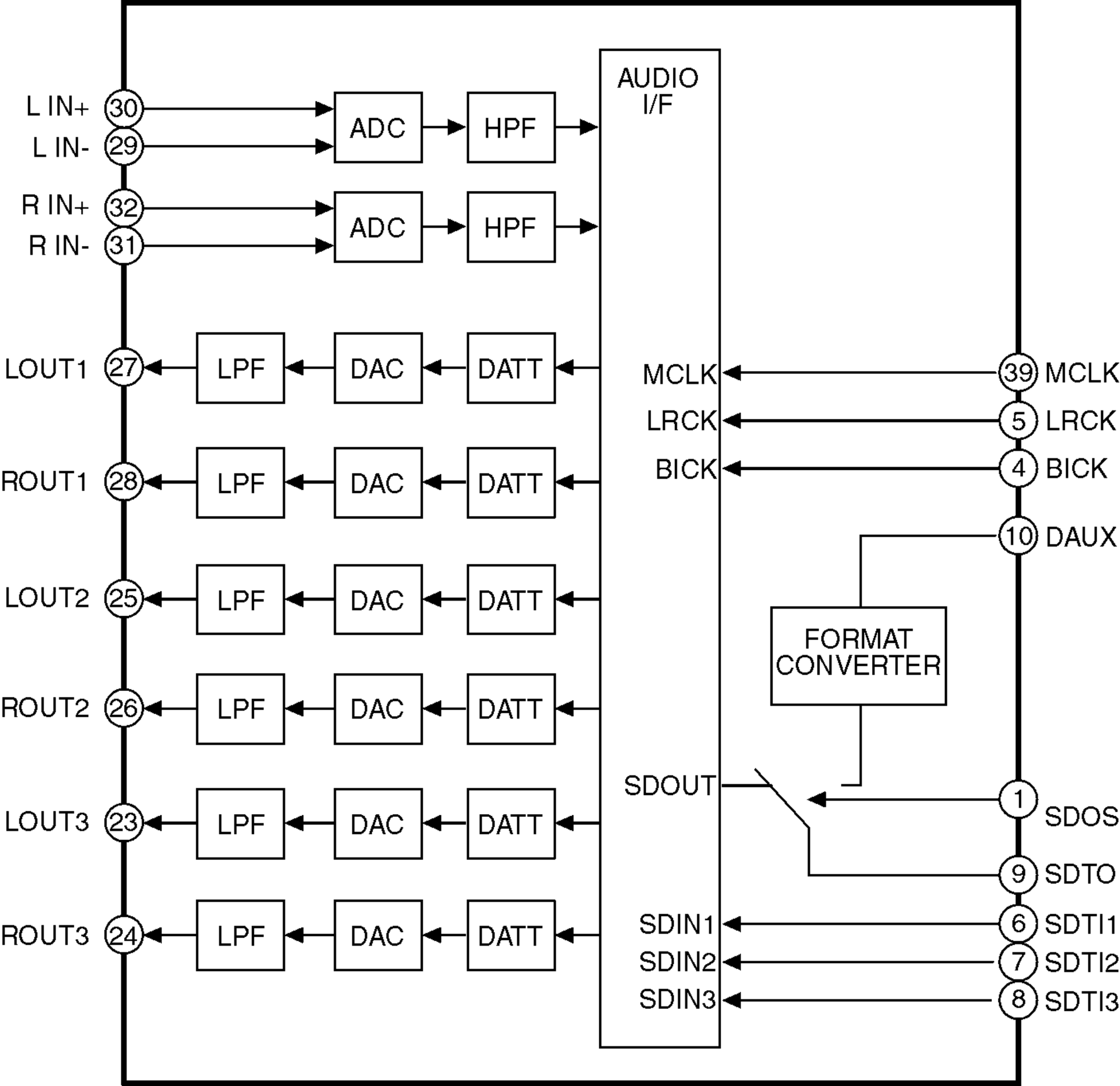
L IN+
30
L IN-
29
R IN+
32
R IN-
31
ADC
HPF
ADC
HPF
AUDIO
I/F
LOUT1
27
ROUT1
28
LOUT2
25
ROUT2
26
LOUT3
23
ROUT3
24
LPF
DAC
DATT
MCLK
LRCK
BICK
SDOUT
SDIN1
SDIN2
SDIN3
39
MCLK
5
LRCK
4
BICK
10
DAUX
FORMAT
CONVERTER
1
SDOS
9
SDTO
6
SDTI1
7
SDTI2
8
SDTI3

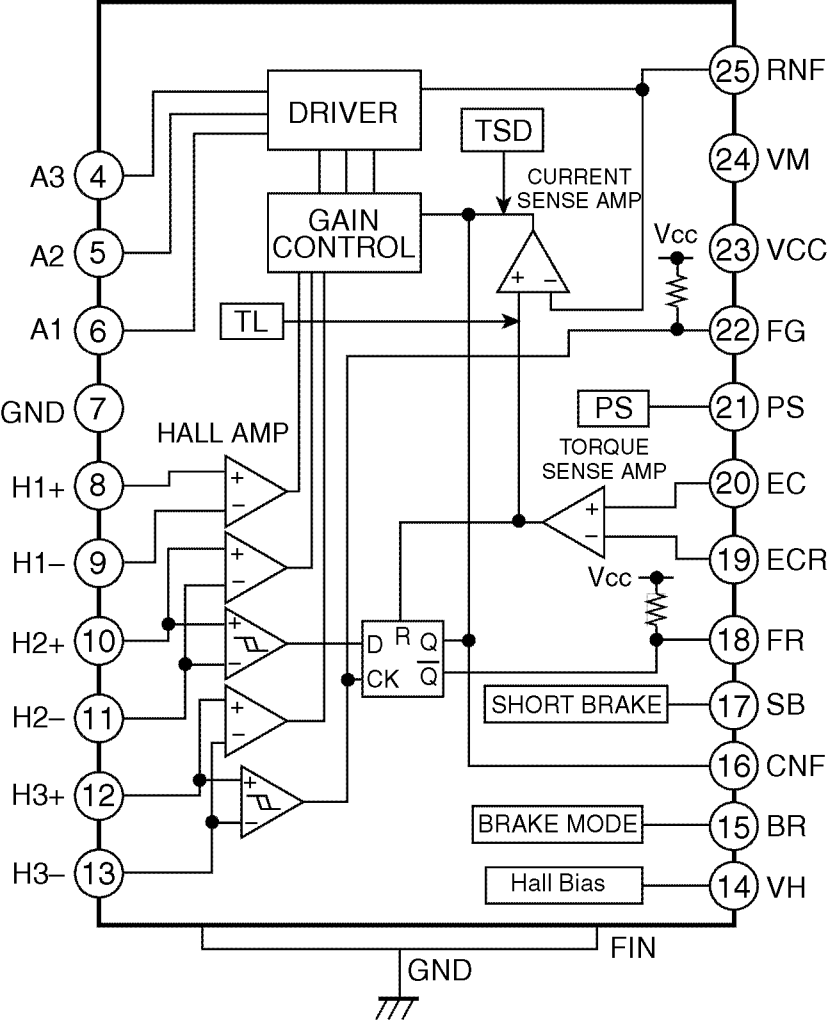
DRIVER
TSD
CURRENT SENSE AMP
GAIN CONTROL
TL
HALL AMP
TORQUE SENSE AMP
PS
SHORT BRAKE
BRAKE MODE
Hall Bias
Vcc
Vcc
D
R
Q
CK
Q
A3
4
A2
5
A1
6
GND
7
H1+
8
H1–
9
H2+
10
H2–
11
H3+
12
H3–
13
25
RNF
24
VM
23
VCC
22
FG
21
PS
20
EC
19
ECR
18
FR
17
SB
16
CNF
15
BR
14
VH
FIN
GND

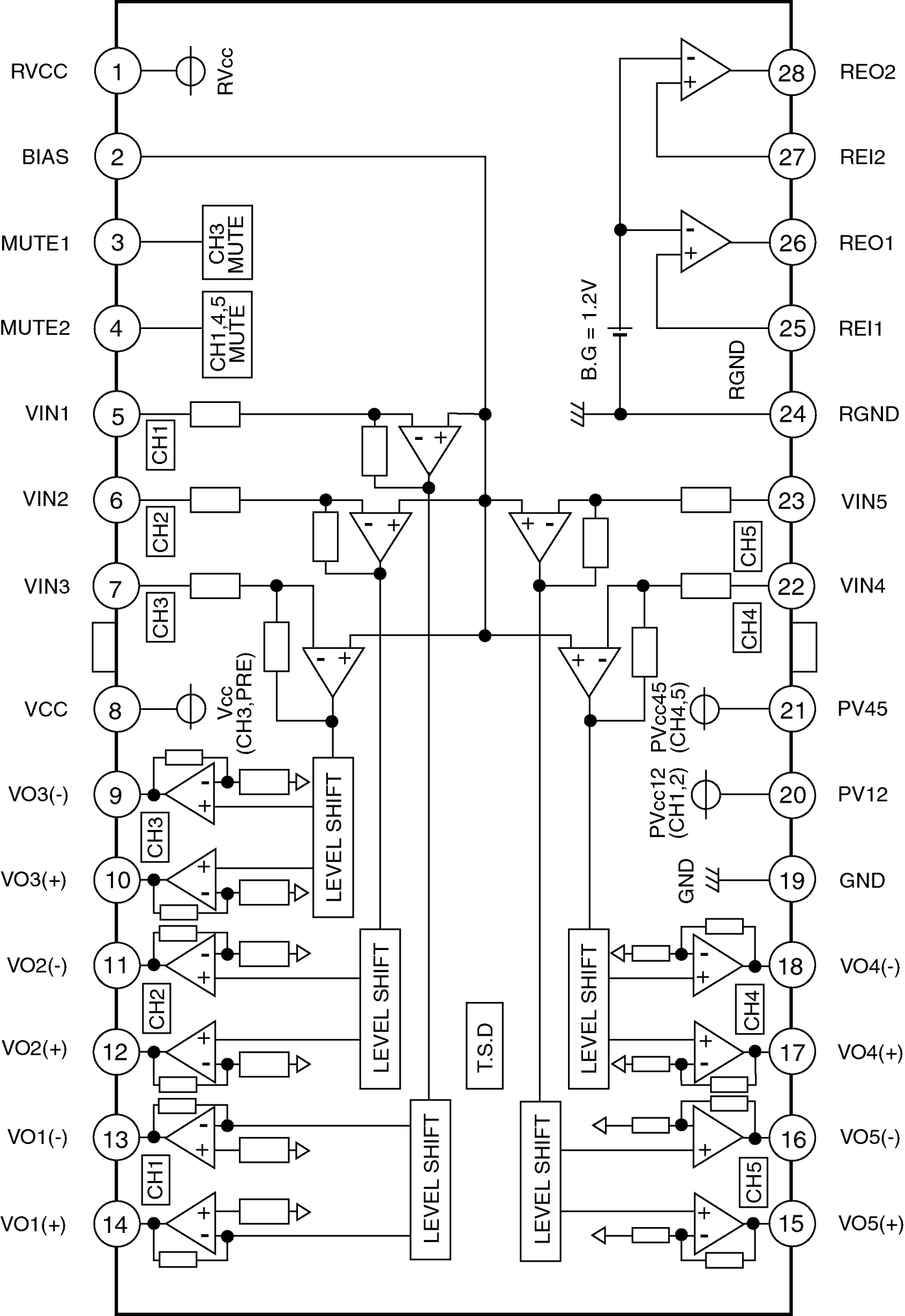
RVCC
1
RVcc
BIAS
2
MUTE1
3
CH3 MUTE
MUTE2
4
CH1,4,5 MUTE
VIN1
5
CH1
VIN2
6
CH2
VIN3
7
CH3
VCC
8
Vcc (CH3,PRE)
VO3(-)
9
CH3
VO3(+)
10
LEVEL SHIFT
VO2(-)
11
CH2
VO2(+)
12
LEVEL SHIFT
VO1(-)
13
CH1
VO1(+)
14
LEVEL SHIFT
T.S.D
LEVEL SHIFT
LEVEL SHIFT
B.G = 1.2V
RGND
28
REO2
27
REI2
26
REO1
25
REI1
24
RGND
23
VIN5
CH5
22
VIN4
CH4
21
PV45
PVcc45 (CH4,5)
20
PV12
PVcc12 (CH1,2)
19
GND
GND
18
VO4(-)
CH4
17
VO4(+)
16
VO5(-)
CH5
15
VO5(+)

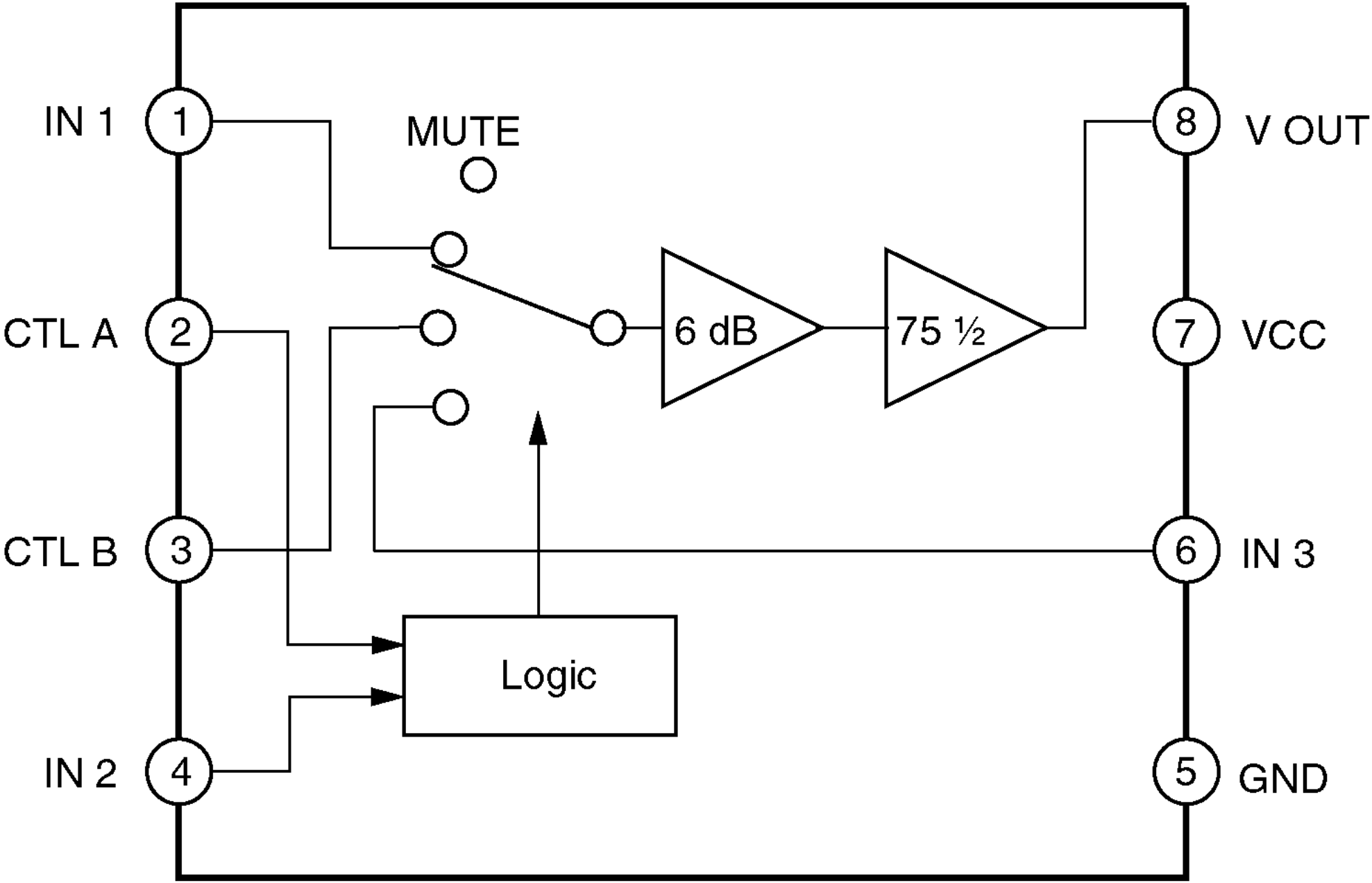
IN 1
1
MUTE
8
V OUT
CTL A
2
6 dB
75 ½
7
VCC
CTL B
3
6
IN 3
Logic
IN 2
4
5
GND

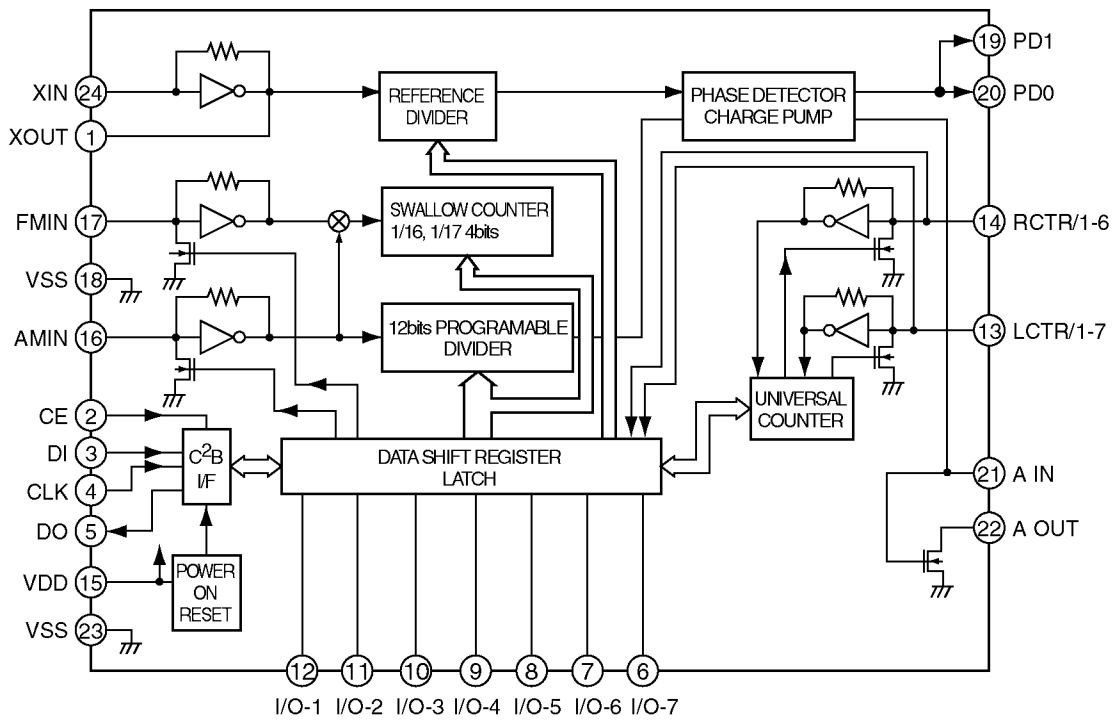
XIN 24
XOUT 1
FMIN 17
VSS 18
AMIN 16
CE 2
DI 3
CLK 4
DO 5
VDD 15
VSS 23
REFERENCE DIVIDER
PHASE DETECTOR CHARGE PUMP
SWALLOW COUNTER 1/16, 1/17 4bits
12bits PROGRAMABLE DIVIDER
UNIVERSAL COUNTER
C2B I/F
DATA SHIFT REGISTER LATCH
POWER ON RESET
19 PD1
20 PD0
14 RCTR/1-6
13 LCTR/1-7
21 A IN
22 A OUT
12 I/O-1
11 I/O-2
10 I/O-3
9 I/O-4
8 I/O-5
7 I/O-6
6 I/O-7

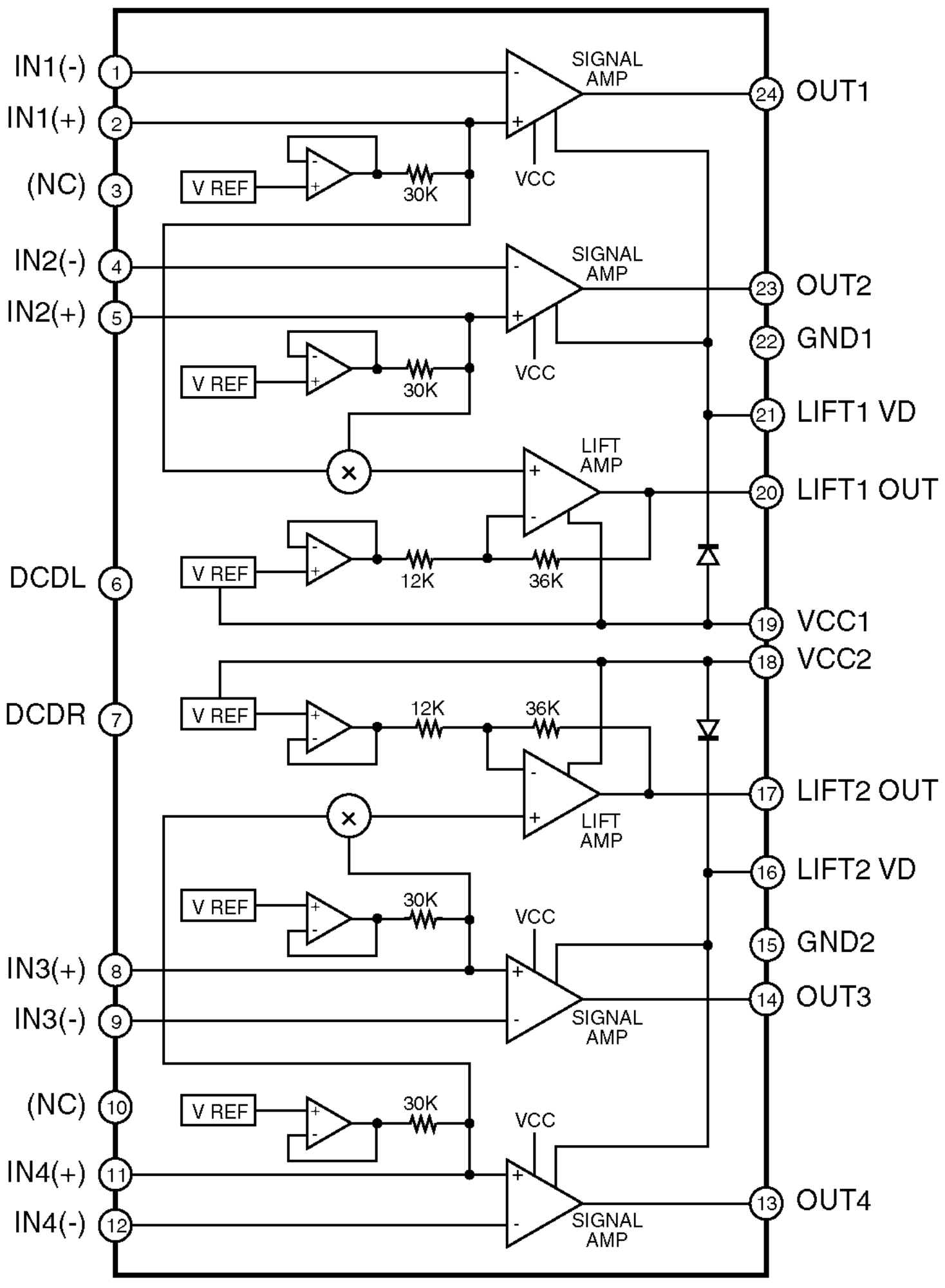
IN1(-)
1
IN1(+)
2
(NC)
3
IN2(-)
4
IN2(+)
5
DCDL
6
DCDR
7
IN3(+)
8
IN3(-)
9
(NC)
10
IN4(+)
11
IN4(-)
12
V REF
30K
SIGNAL AMP
VCC
LIFT AMP
12K
36K
24
OUT1
23
OUT2
22
GND1
21
LIFT1 VD
20
LIFT1 OUT
19
VCC1
18
VCC2
17
LIFT2 OUT
16
LIFT2 VD
15
GND2
14
OUT3
13
OUT4

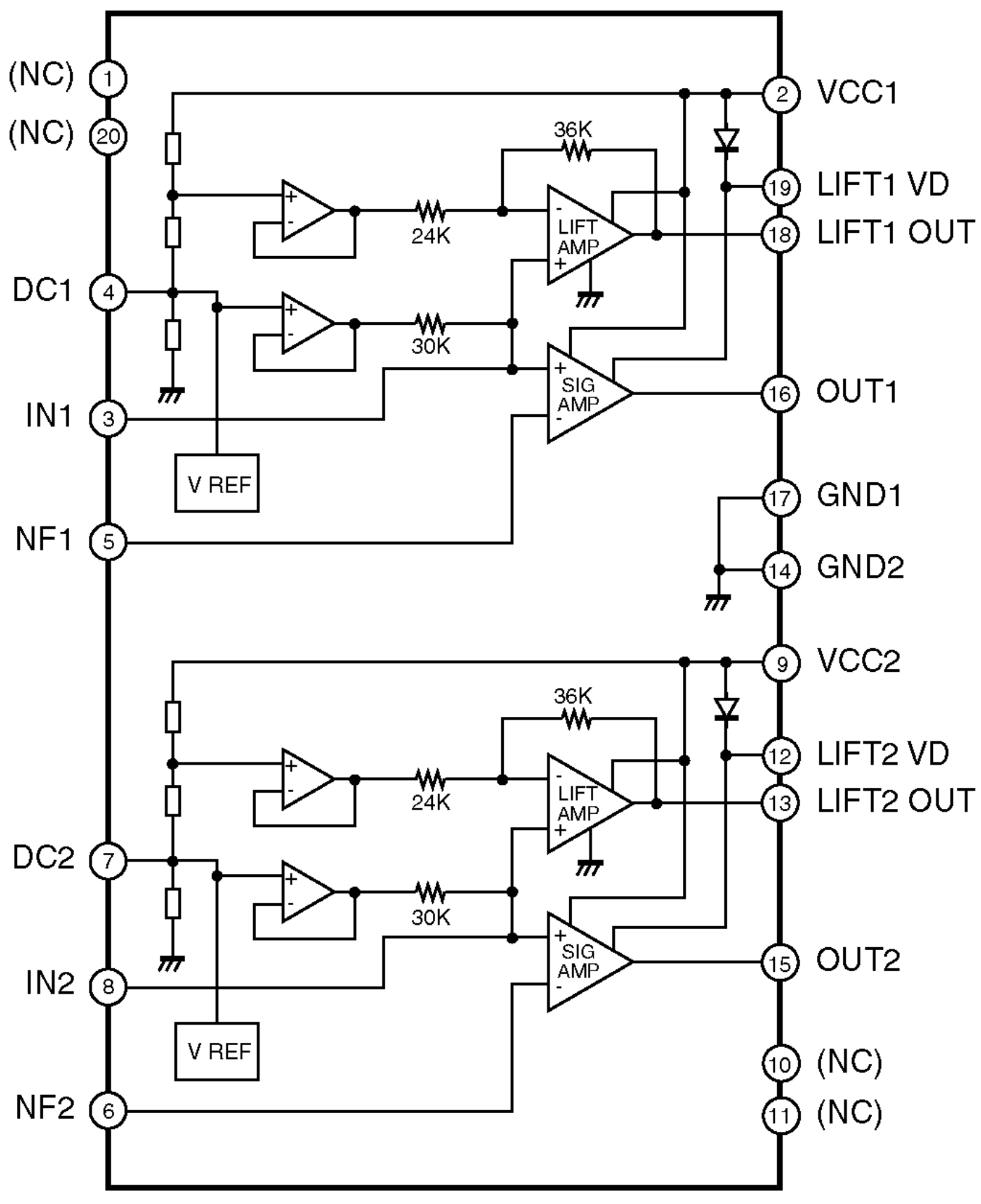
(NC) 1
(NC) 20
DC1 4
IN1 3
NF1 5
DC2 7
IN2 8
NF2 6
2 VCC1
19 LIFT1 VD
18 LIFT1 OUT
16 OUT1
17 GND1
14 GND2
9 VCC2
12 LIFT2 VD
13 LIFT2 OUT
15 OUT2
10 (NC)
11 (NC)
36K
24K
30K
LIFT AMP
SIG AMP
V REF

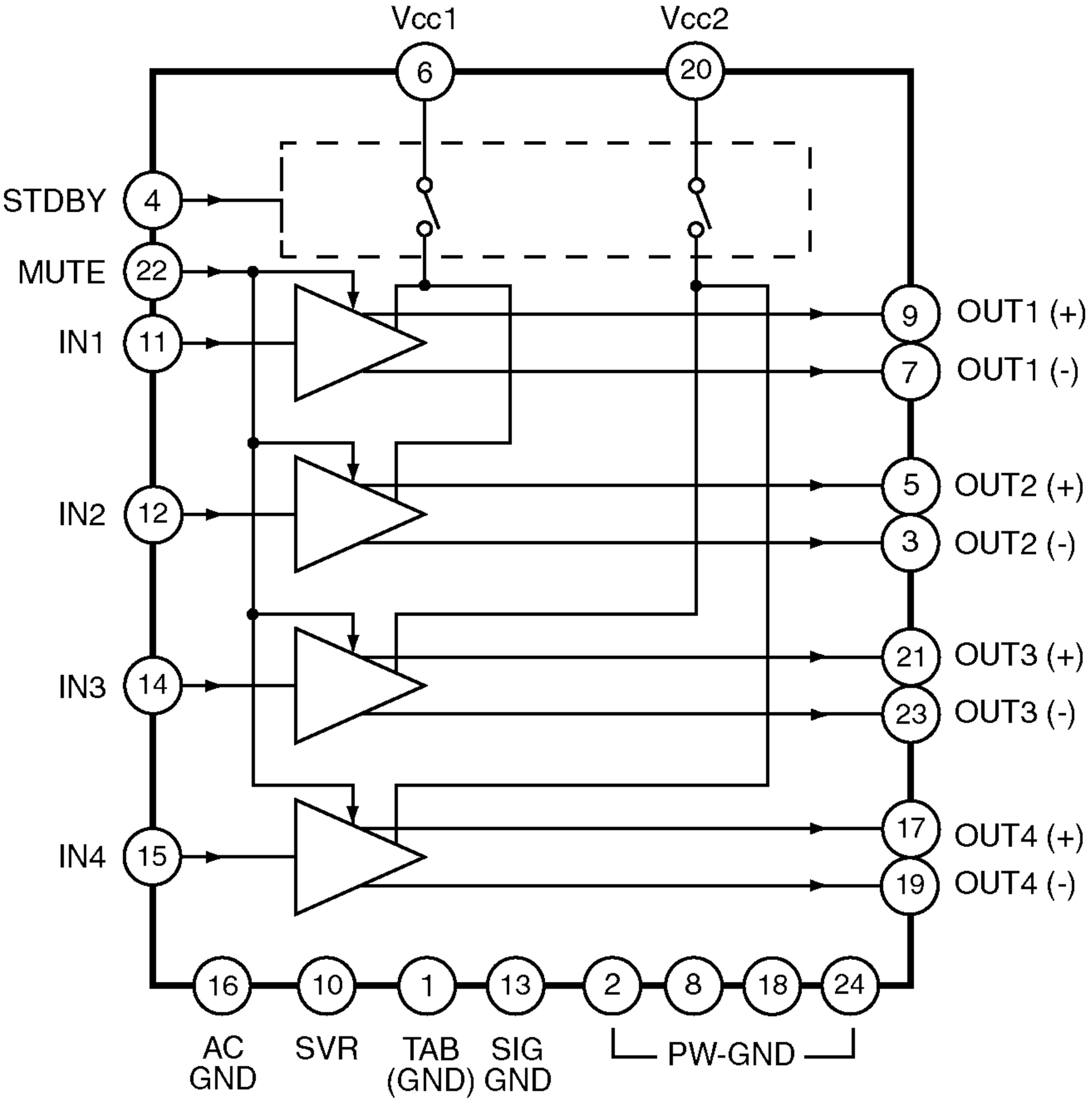
Vcc1
Vcc2
6
20
STDBY
4
MUTE
22
IN1
11
IN2
12
IN3
14
IN4
15
9
OUT1 (+)
7
OUT1 (-)
5
OUT2 (+)
3
OUT2 (-)
21
OUT3 (+)
23
OUT3 (-)
17
OUT4 (+)
19
OUT4 (-)
16
10
1
13
2
8
18
24
AC GND
SVR
TAB (GND)
SIG GND
PW-GND

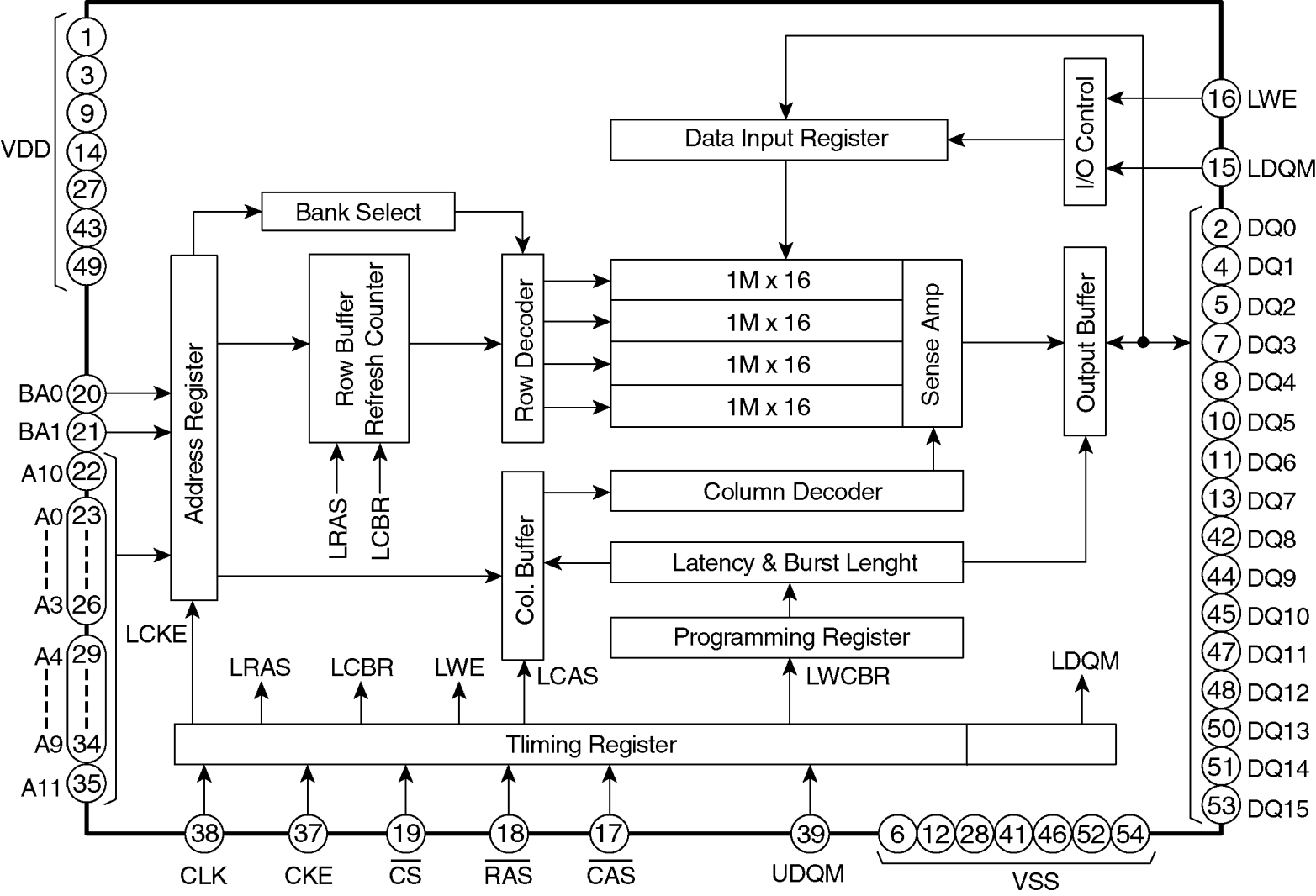
VDD
1
3
9
14
27
43
49
Bank Select
Data Input Register
I/O Control
16 LWE
15 LDQM
2 DQ0
4 DQ1
5 DQ2
7 DQ3
8 DQ4
10 DQ5
11 DQ6
13 DQ7
42 DQ8
44 DQ9
45 DQ10
47 DQ11
48 DQ12
50 DQ13
51 DQ14
53 DQ15
BA0 20
BA1 21
A10 22
A0 23
A3 26
A4 29
A9 34
A11 35
Address Register
Row Buffer
Refresh Counter
Row Decoder
1M x 16
1M x 16
1M x 16
1M x 16
Sense Amp
Output Buffer
LRAS
LCBR
Column Decoder
Col. Buffer
Latency & Burst Lenght
Programming Register
LCKE
LRAS
LCBR
LWE
LCAS
LWCBR
LDQM
Tliming Register
38 CLK
37 CKE
19 CS
18 RAS
17 CAS
39 UDQM
6 12 28 41 46 52 54 VSS

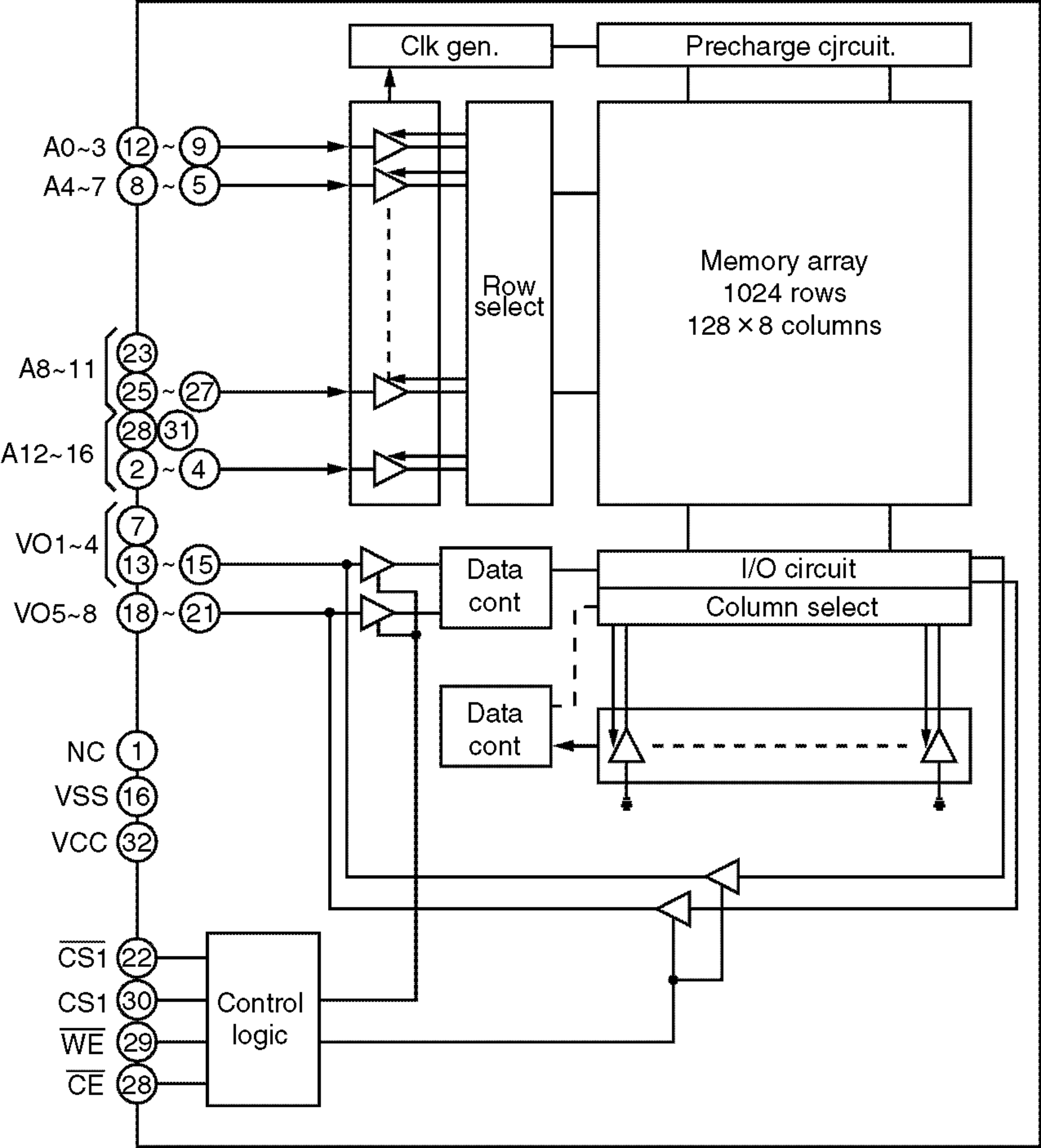
Clk gen.
Precharge cjrcuit.
A0~3
12
~
9
A4~7
8
~
5
Row
select
Memory array
1024 rows
128 × 8 columns
A8~11
23
25
~
27
28
31
A12~16
2
~
4
VO1~4
7
13
~
15
VO5~8
18
~
21
Data
cont
I/O circuit
Column select
Data
cont
NC
1
VSS
16
VCC
32
CS1
22
CS1
30
WE
29
CE
28
Control
logic

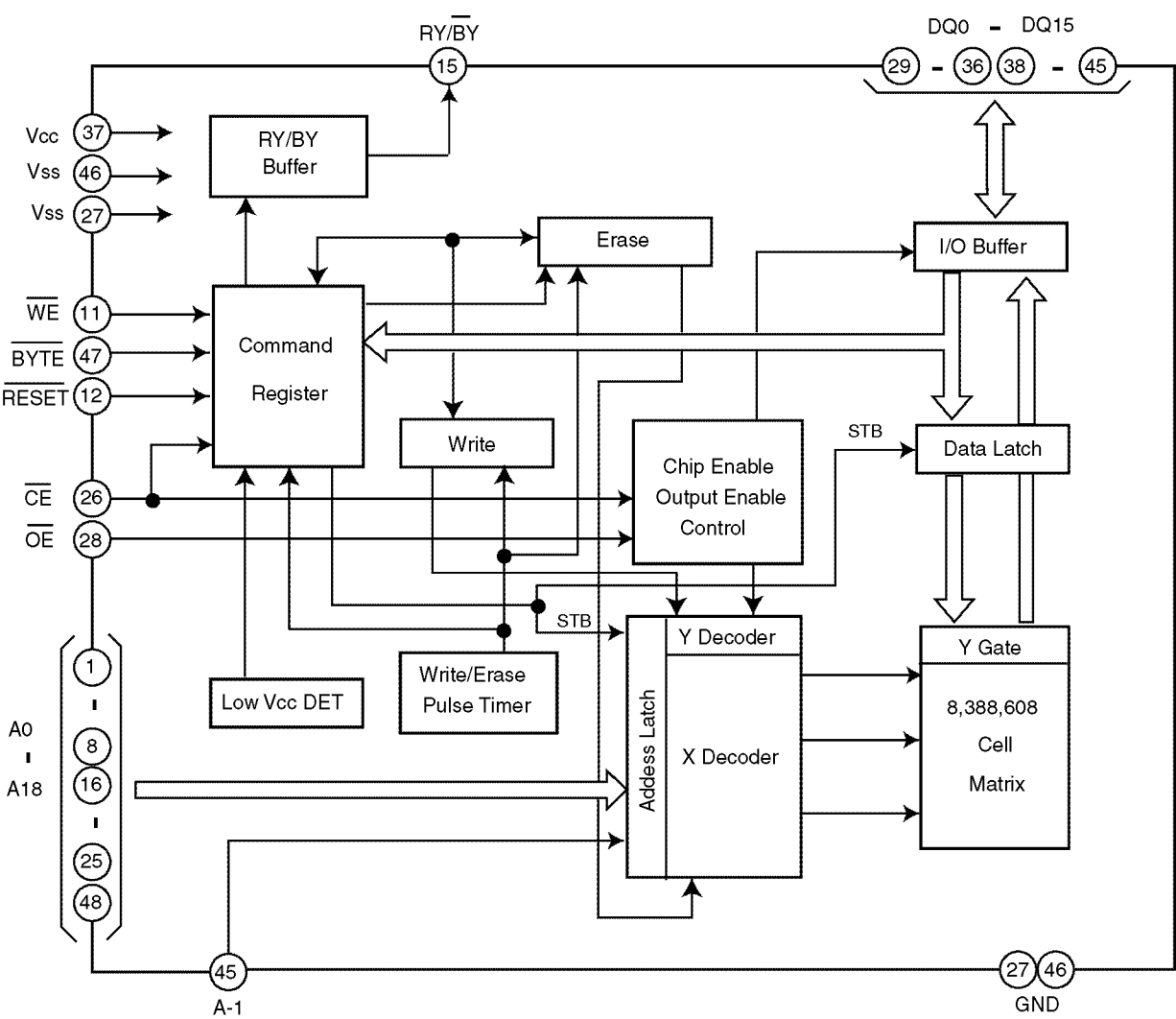
RY/BY
15
DQ0 - DQ15
29 - 36 38 - 45
Vcc 37
Vss 46
Vss 27
RY/BY Buffer
Erase
I/O Buffer
WE 11
BYTE 47
RESET 12
Command Register
Write
Chip Enable Output Enable Control
STB
Data Latch
CE 26
OE 28
STB
Y Decoder
Y Gate
1
8
16
25
48
A0 - A18
Low Vcc DET
Write/Erase Pulse Timer
Addess Latch
X Decoder
8,388,608 Cell Matrix
45
A-1
27 46
GND

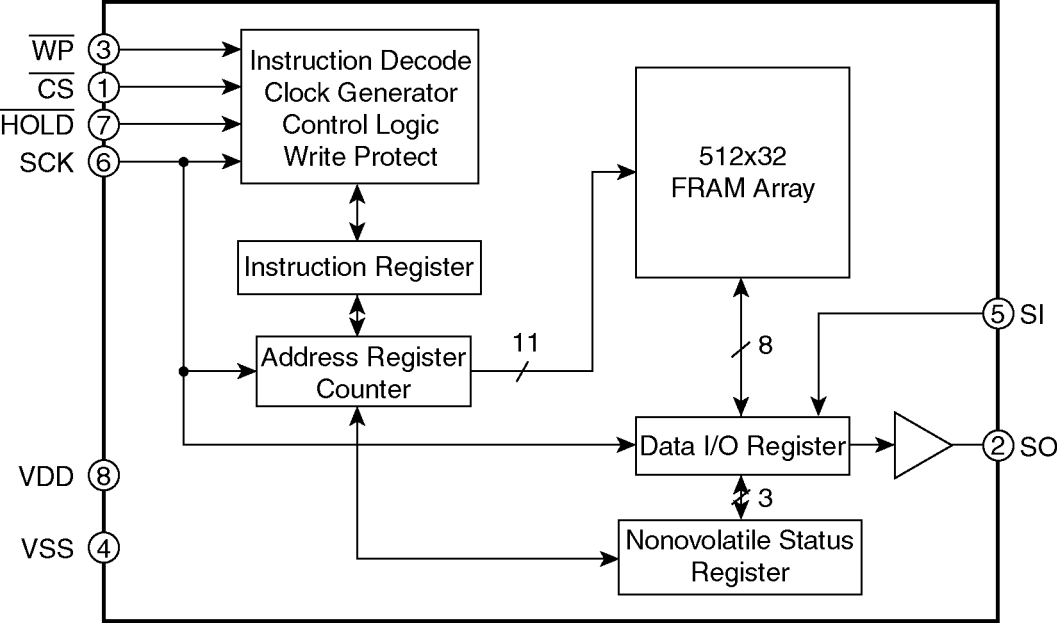
WP
3
CS
1
HOLD
7
SCK
6
Instruction Decode
Clock Generator
Control Logic
Write Protect
Instruction Register
Address Register
Counter
11
512x32
FRAM Array
8
5
SI
Data I/O Register
2
SO
3
Nonovolatile Status
Register
VDD
8
VSS
4

YGFD19142

'03. 9.19

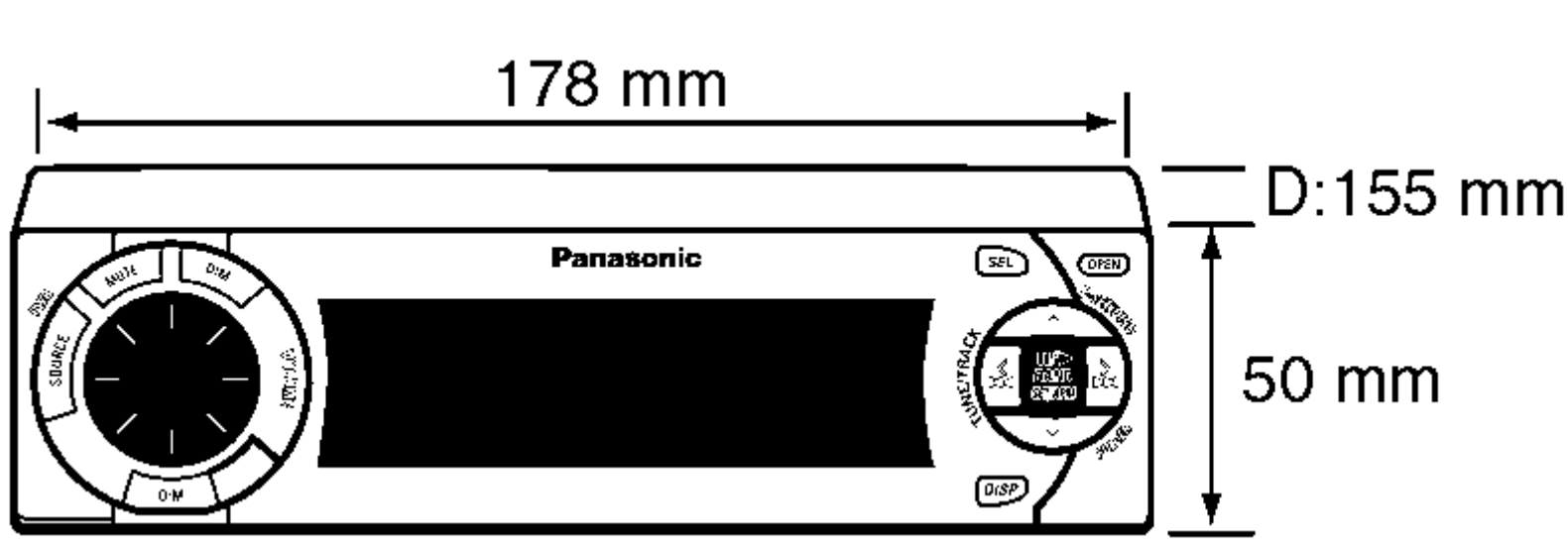
178 mm
D:155 mm
50 mm
Panasonic
SEL
OPEN
DISP
SOURCE
MUTE

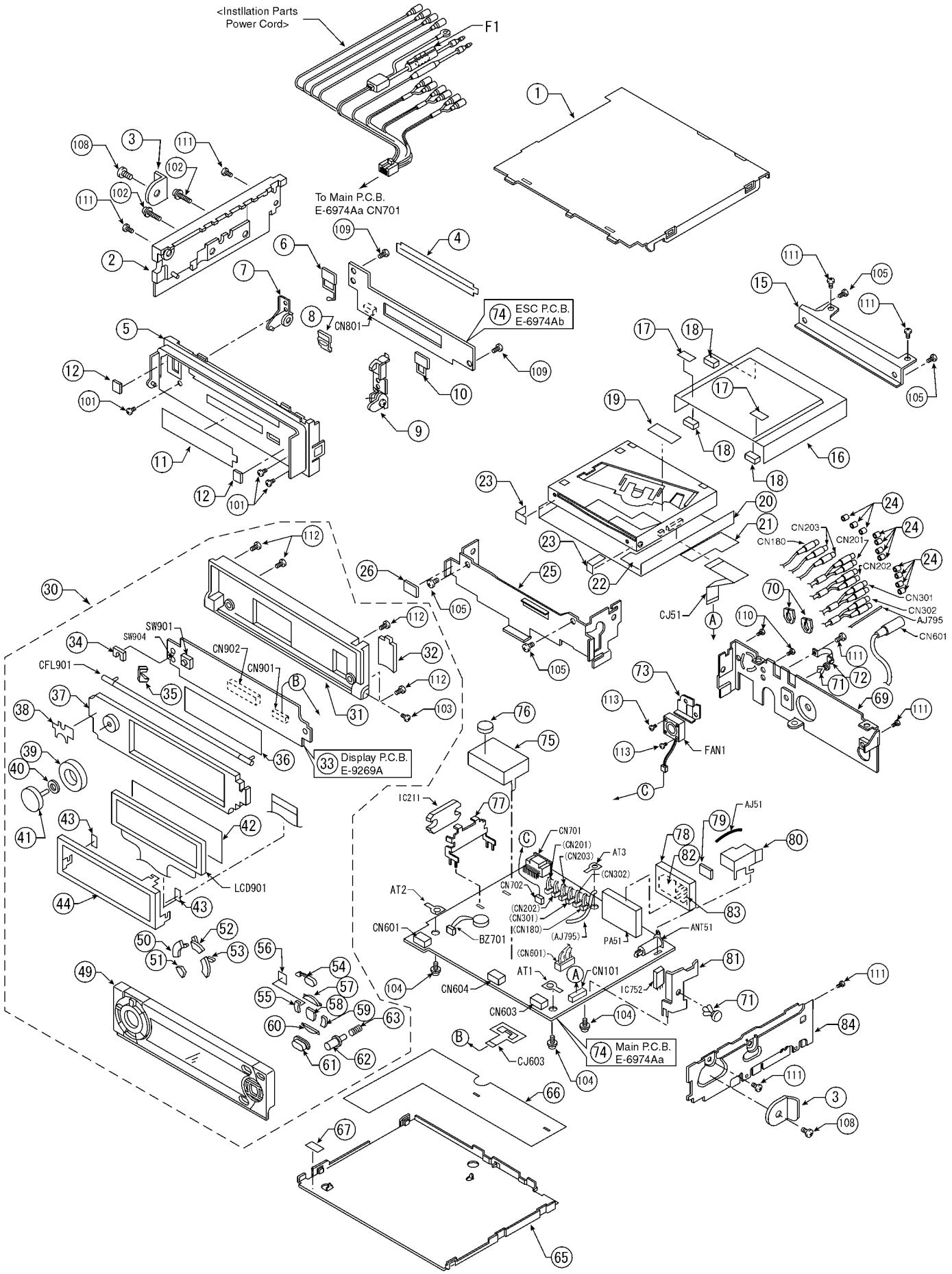
<Instllation Parts
Power Cord>
F1
To Main P.C.B.
E-6974Aa CN701
ESC P.C.B.
E-6974Ab
CN801
Display P.C.B.
E-9269A
Main P.C.B.
E-6974Aa
CN203
CN180
CN201
CN202
CN301
CN302
AJ795
CN601
CJ51
FAN1
SW901
SW904
CN902
CN901
CFL901
LCD901
IC211
CN701
(CN201)
(CN203)
AT3
(CN302)
CN702
(CN202)
(CN301)
(CN180)
(AJ795)
AT2
CN601
BZ701
PA51
ANT51
AJ51
(CN601)
AT1
CN101
IC752
CN604
CN603
CJ603
2
1
A
B

CQ-D7400W

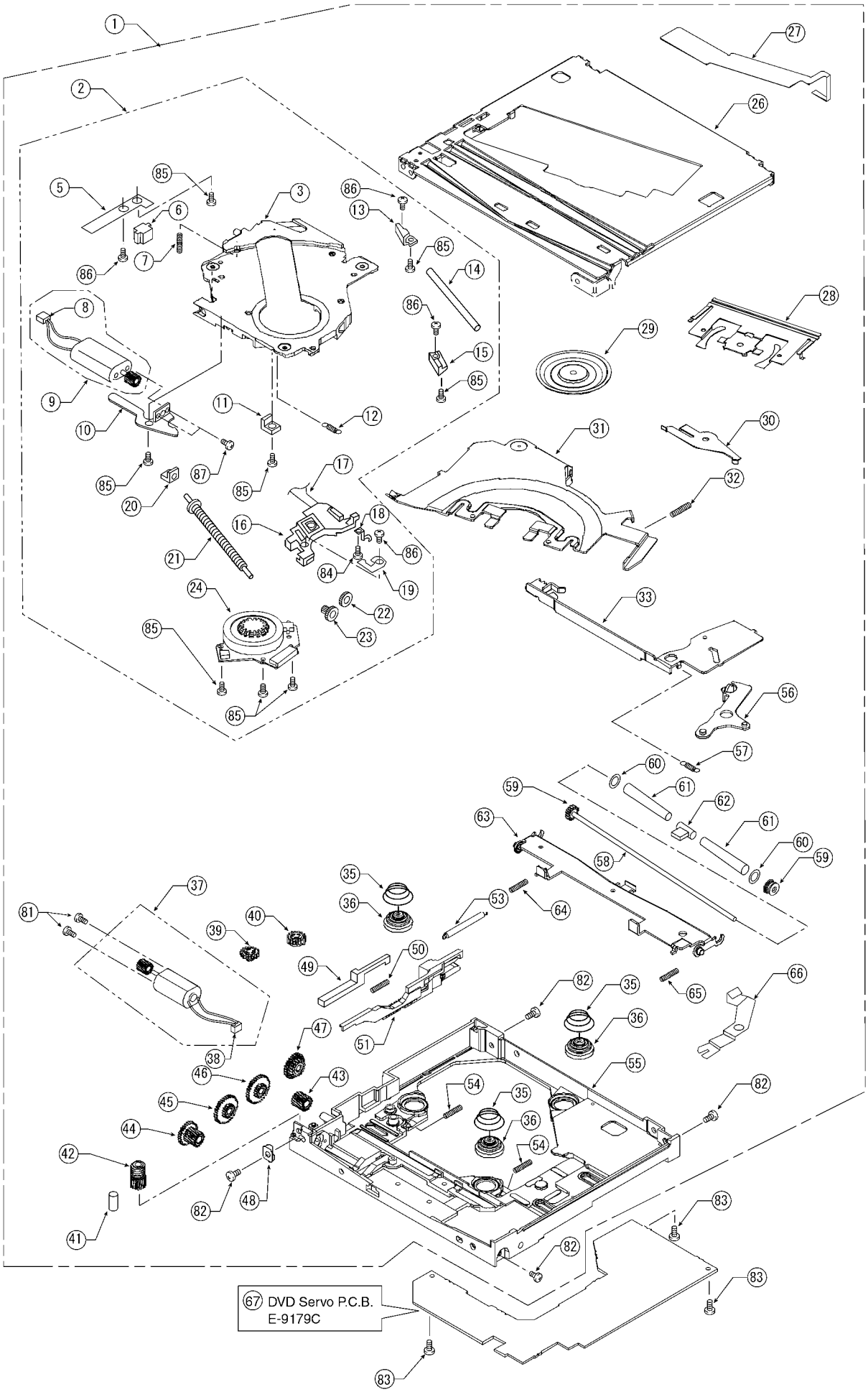

YGFD19142
2003.10.9

CAUTION:

This product utilizes a laser diode with the unit turned "on", laser radiation is emitted from the pickup lens.

Laser radiation from the pickup lens is safety level, but be sure the followings:

1. Do not disassemble the optical pickup unit, since radiation from exposed laser diode is dangerous.
2. Do not adjust the variable resistor on the pickup unit. It was already adjusted.
3. Do not look at the focus lens using optical instruments.
4. Recommend not to look at pickup lens for a long time.

DANGER! Visible and invisible laser radiation when open. Avoid direct exposure to beam.

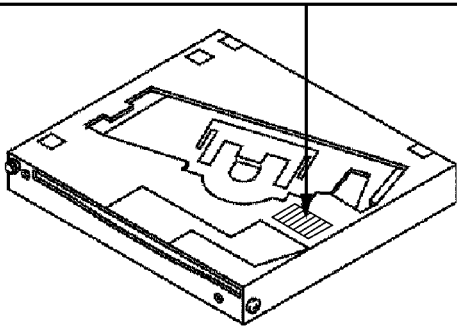

Deck Ass'y (Upper Side)

Caution

This Product utilizes a laser.

Use of controls or adjustments or performance of procedures other than those specified herein may result in hazardous radiation exposure.

ModelPicture

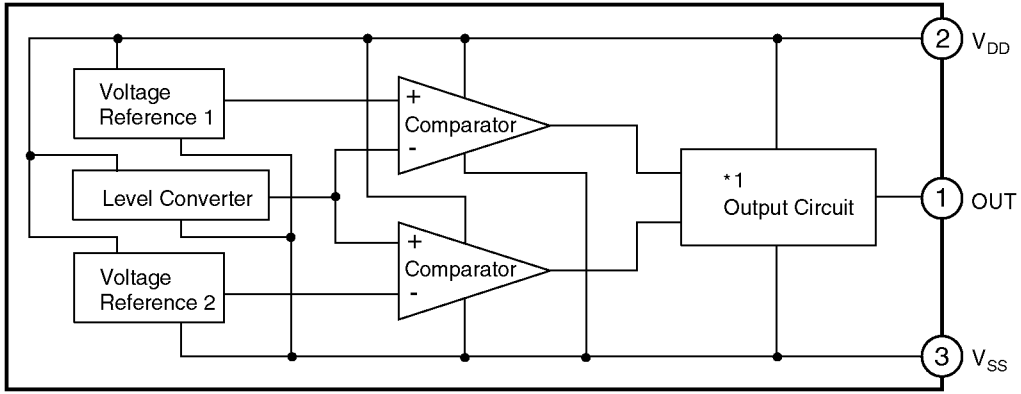
Voltage Reference 1
Level Converter
Voltage Reference 2
+
Comparator
-
+
Comparator
-
*1
Output Circuit
2
V_{DD}
1
OUT
3
V_{SS}

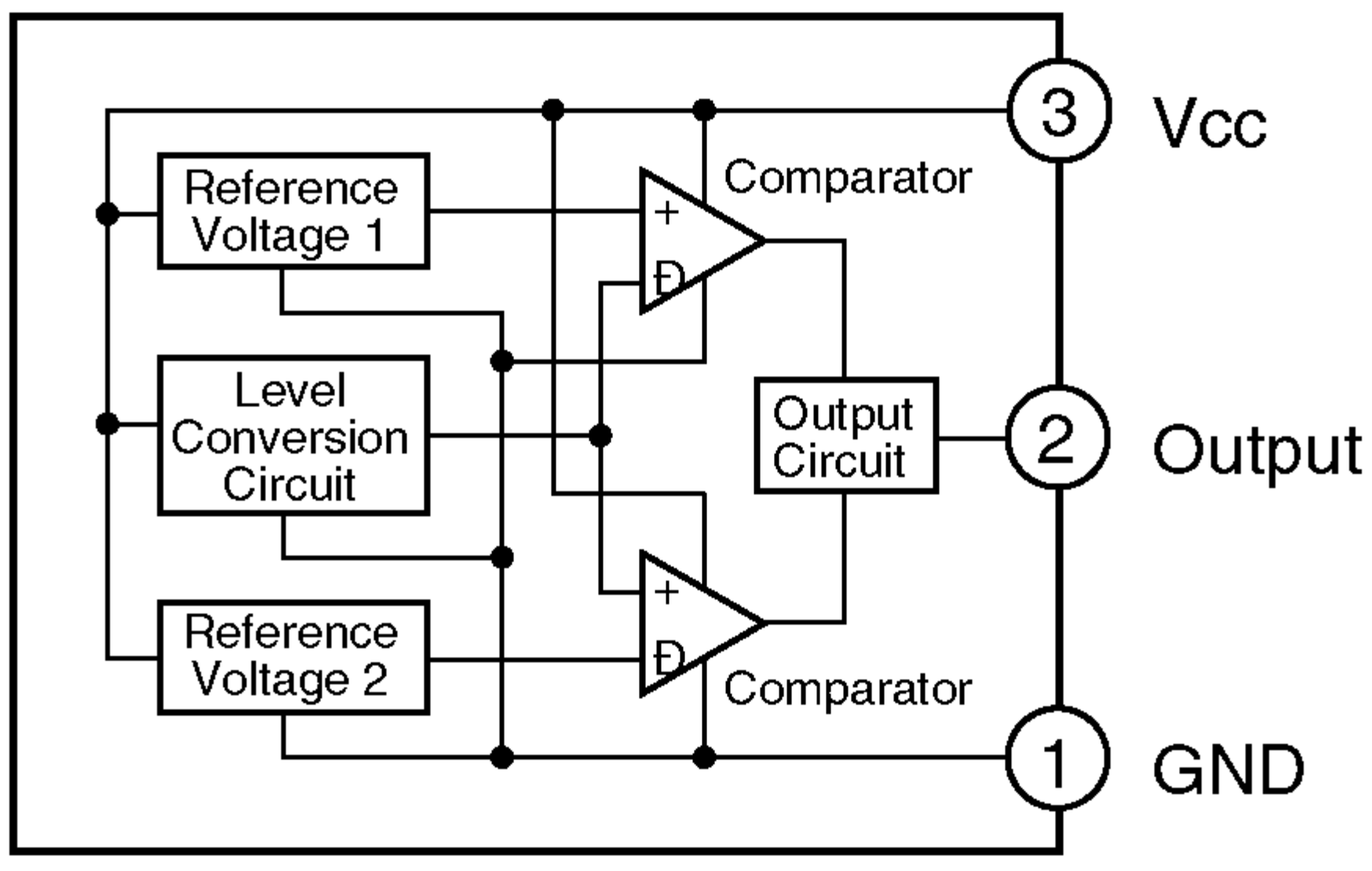
Reference Voltage 1
Level Conversion Circuit
Reference Voltage 2
Comparator
Comparator
Output Circuit
3
Vcc
2
Output
1
GND

19.4. Display Block

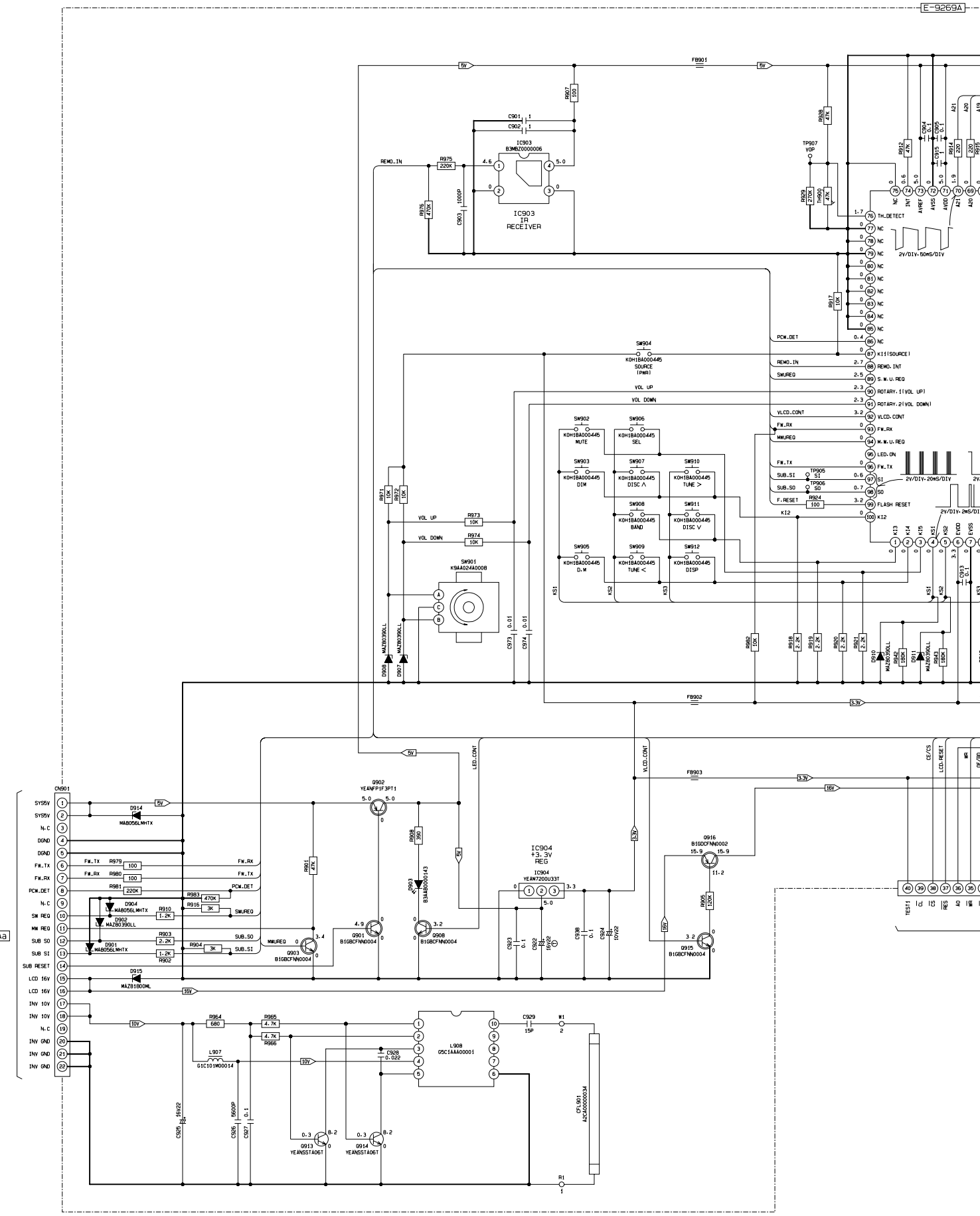

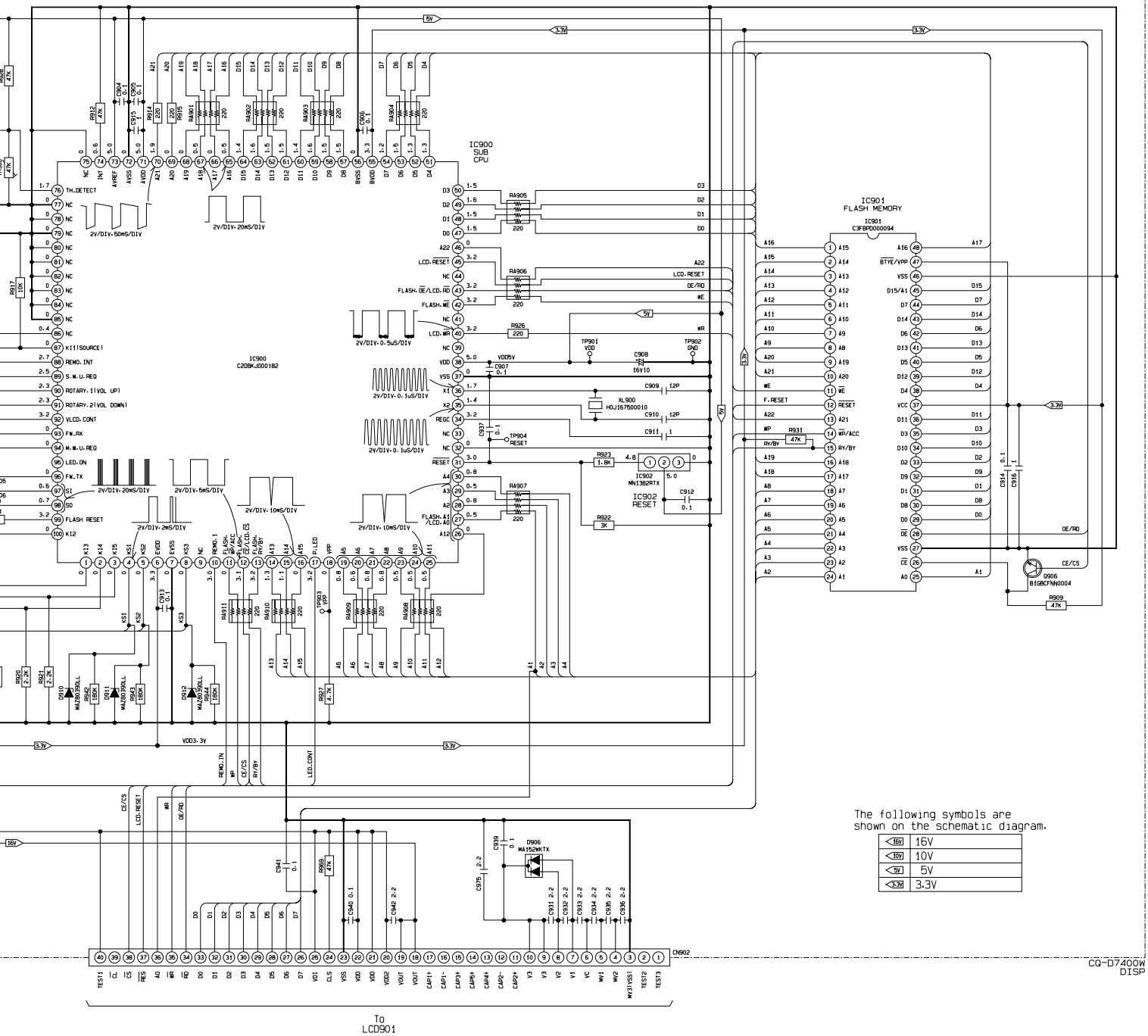

The following symbols are shown on the schematic diagram.

16V	16V
10V	10V
5V	5V
3.3V	3.3V

19.5. DVD Servo Block-1

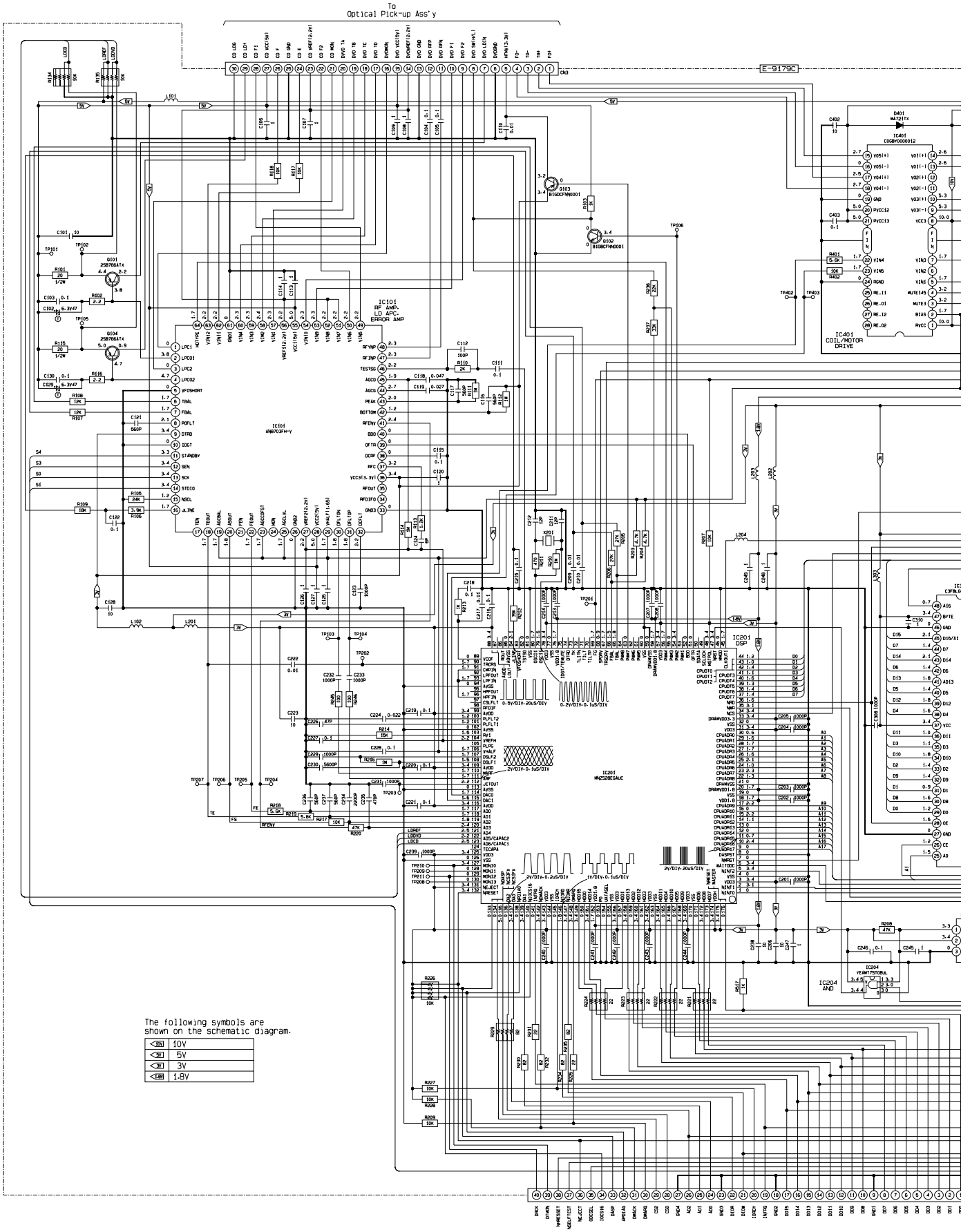

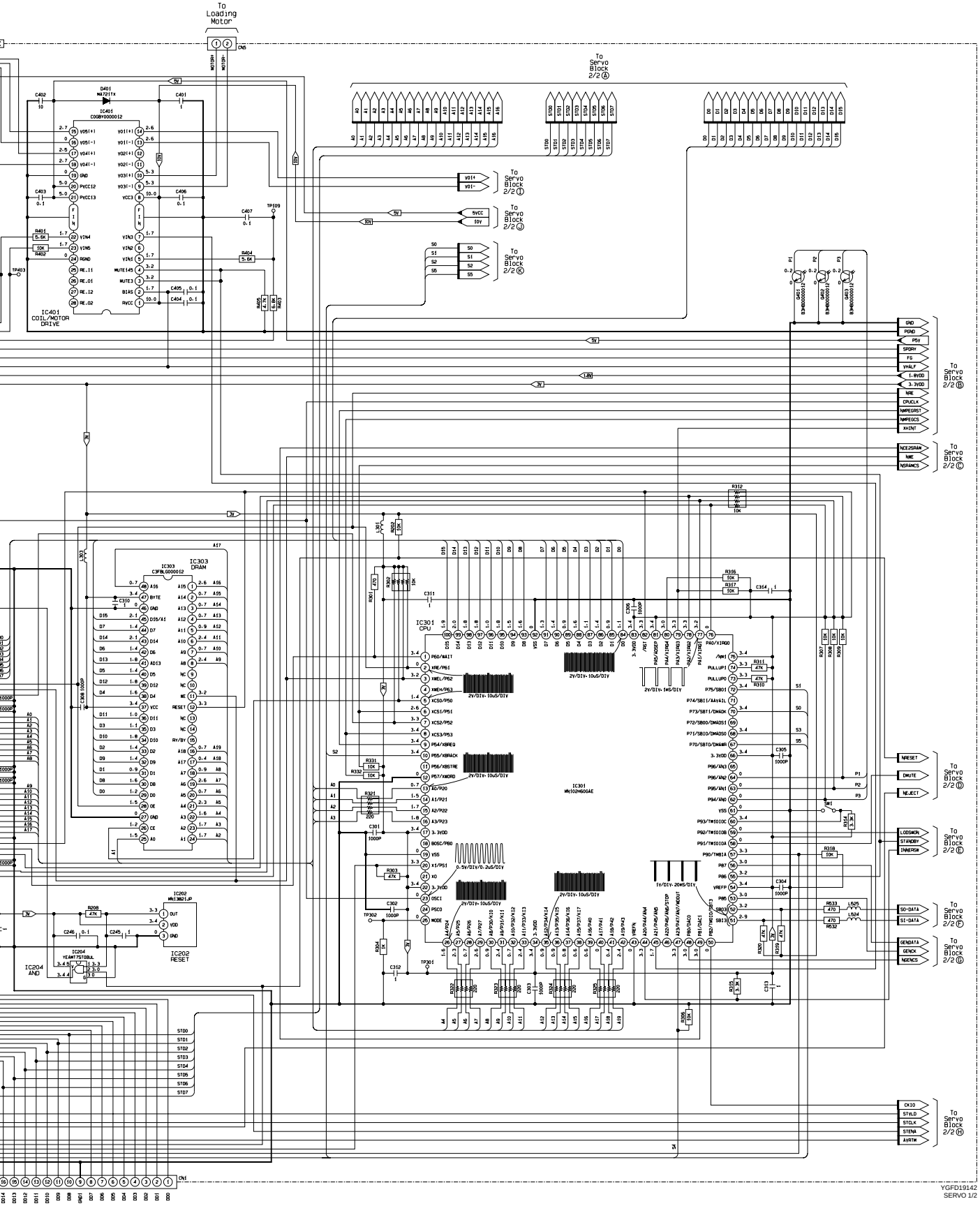
To Loading Motor
To Servo Block 2/2 (A)
To Servo Block 2/2 (I)
To Servo Block 2/2 (J)
To Servo Block 2/2 (K)
To Servo Block 2/2 (B)
To Servo Block 2/2 (C)
To Servo Block 2/2 (D)
To Servo Block 2/2 (E)
To Servo Block 2/2 (F)
To Servo Block 2/2 (G)
To Servo Block 2/2 (H)
IC401 COIL/MOTOR DRIVE
IC303 DRAM
IC301 CPU
IC301 MN102H60GAE
IC202 RESET
IC204 AND
YGFD19142
SERVO 1/2

19.6. DVD Servo Block-2

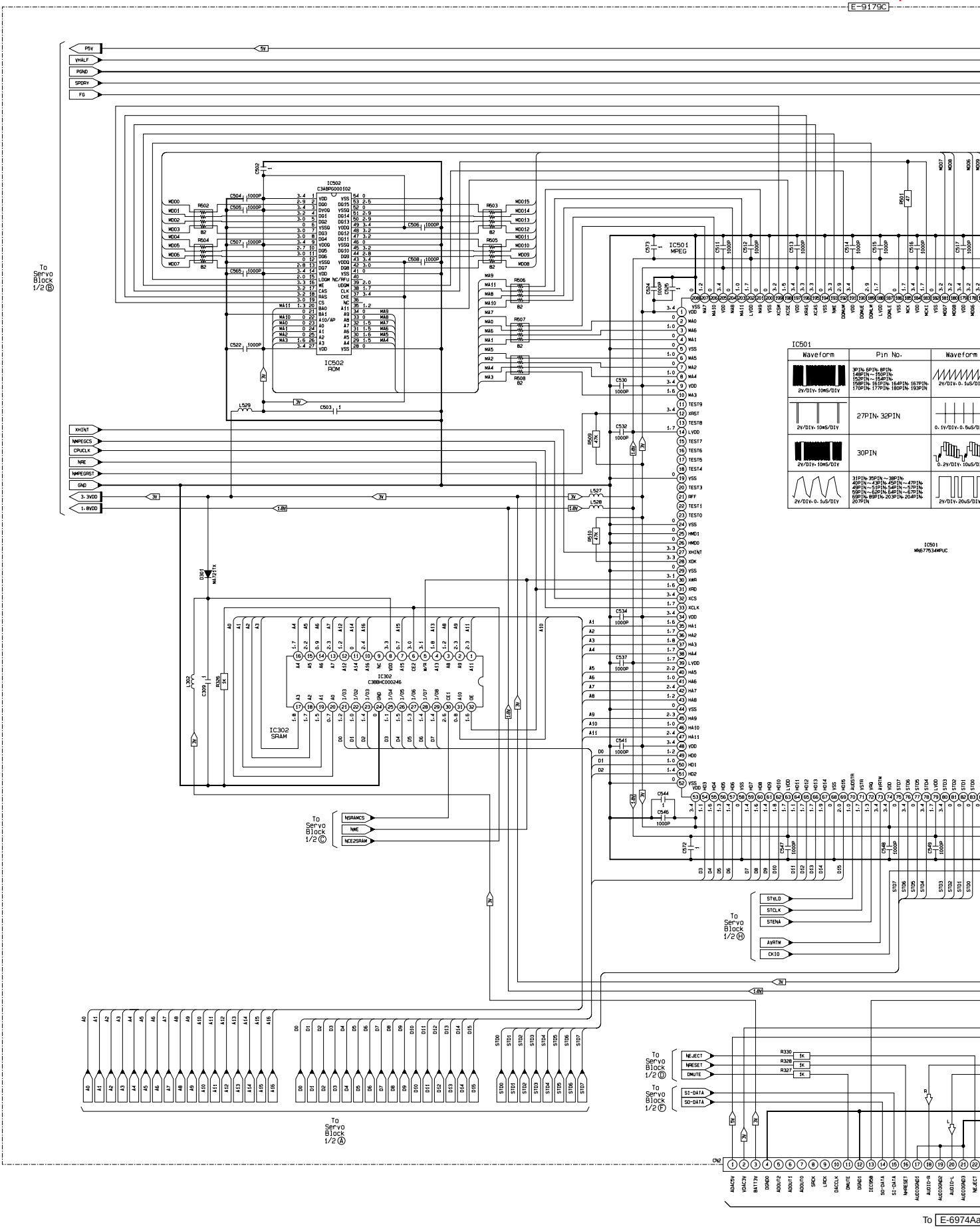

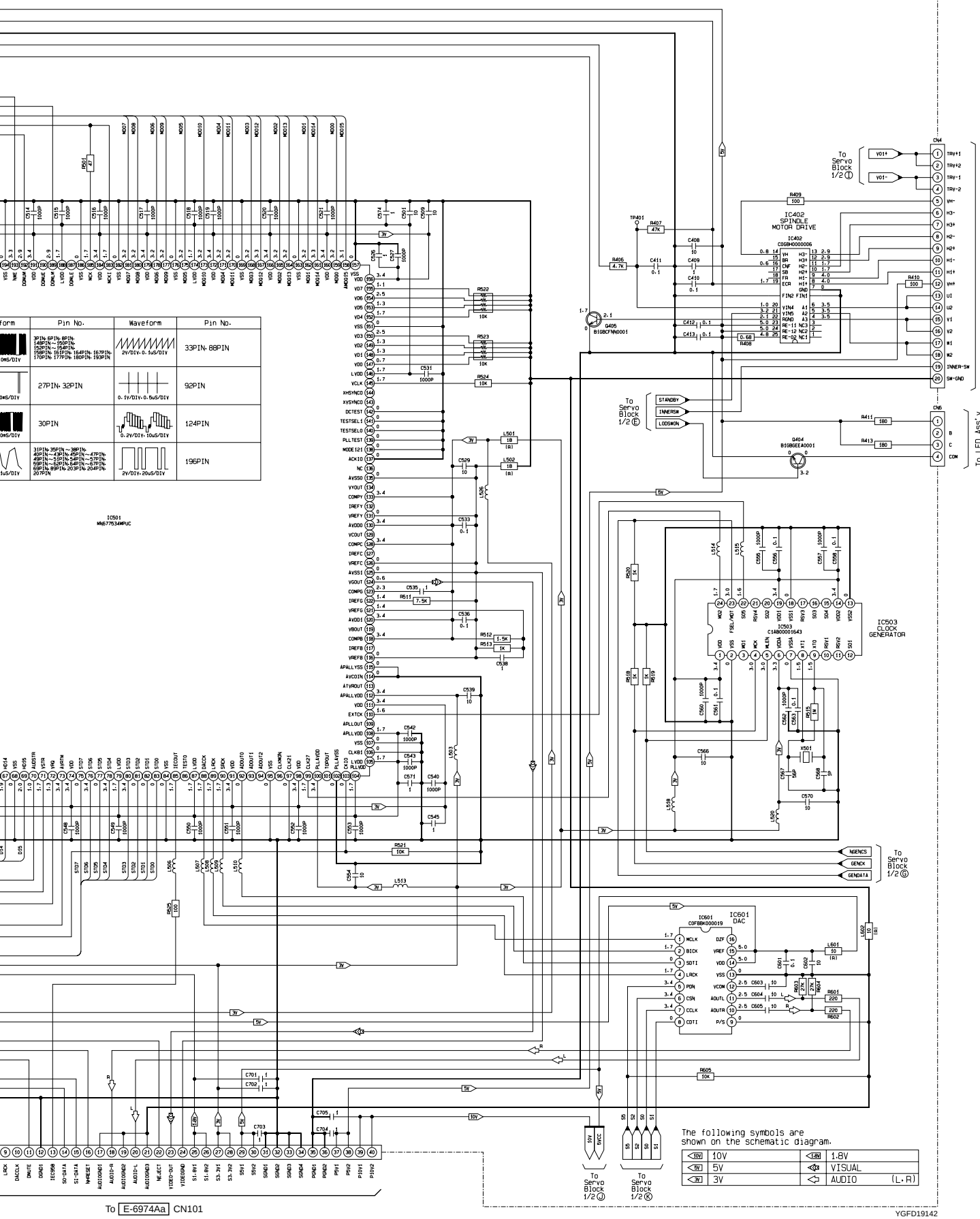

Waveform	Pin No.	Waveform	Pin No.
	3PIN·6PIN·8PIN· 148PIN~150PIN· 152PIN~154PIN· 158PIN·161PIN·164PIN·167PIN· 170PIN·177PIN·180PIN·193PIN	2V/DIV·0.1uS/DIV	33PIN·88PIN
	27PIN·32PIN	0.1V/DIV·0.5uS/DIV	92PIN
	30PIN	0.2V/DIV·10uS/DIV	124PIN
	31PIN·35PIN~38PIN· 40PIN~43PIN·45PIN~47PIN· 49PIN~51PIN·54PIN~57PIN· 59PIN~62PIN·64PIN~67PIN· 69PIN·89PIN·203PIN·204PIN· 207PIN	2V/DIV·20uS/DIV	196PIN

The following symbols are shown on the schematic diagram.

10V	10V	1.8V	1.8V
5V	5V		VISUAL
3V	3V		AUDIO (L.R)

19 SCHEMATIC DIAGRAM-2

19.1. Main Block-1

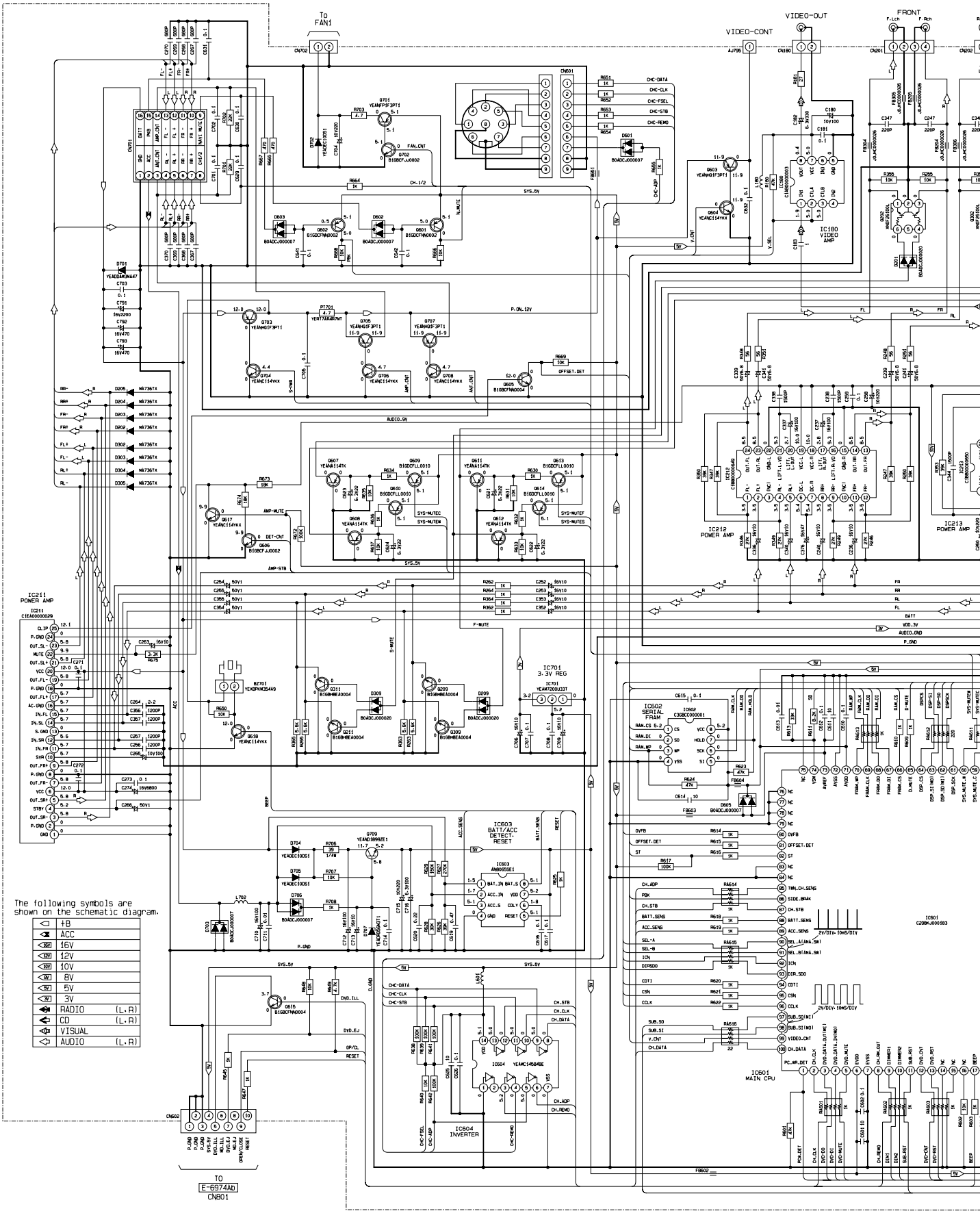

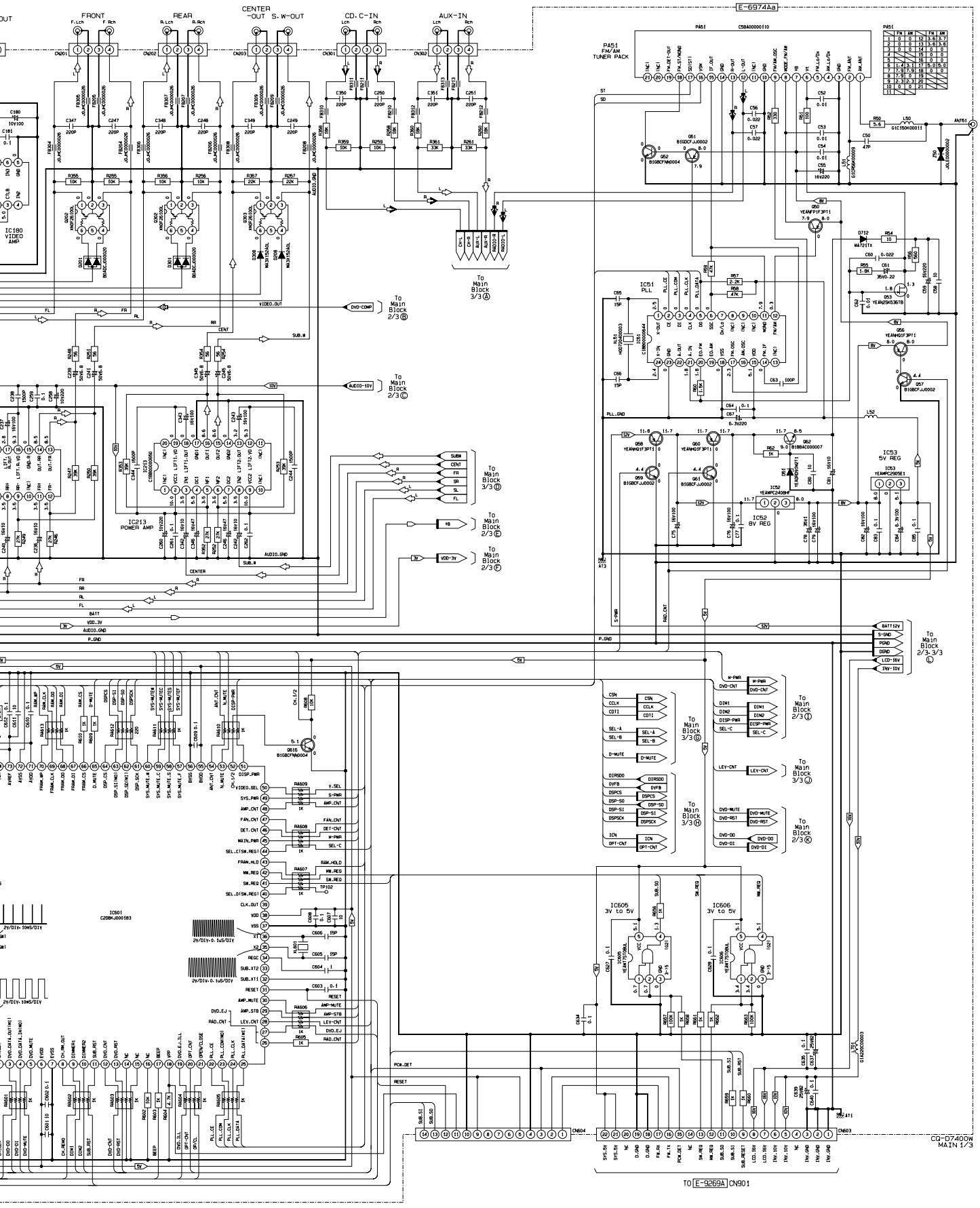
FRONT
REAR
CENTER -OUT S.W-OUT
CD.C-IN
AUX-IN
E-6974Aa
PA51 FM/AM TUNER PACK
IC180 VIDEO AMP
IC213 POWER AMP
IC51 PLL
IC53 5V REG
IC52 8V REG
IC605 3V to 5V
IC606 3V to 5V
IC601 C2DBK.J000183
To Main Block 3/3 Ⓐ
To Main Block 2/3 Ⓑ
To Main Block 2/3 Ⓒ
To Main Block 3/3 Ⓓ
To Main Block 2/3 Ⓔ
To Main Block 2/3 Ⓕ
To Main Block 3/3 Ⓖ
To Main Block 3/3 Ⓗ
To Main Block 2/3 Ⓘ
To Main Block 3/3 Ⓙ
To Main Block 2/3 Ⓚ
To Main Block 2/3·3/3 Ⓛ
CQ-D7400W MAIN 1/3
TO E-9269A CN901

19.2. Main Block-2

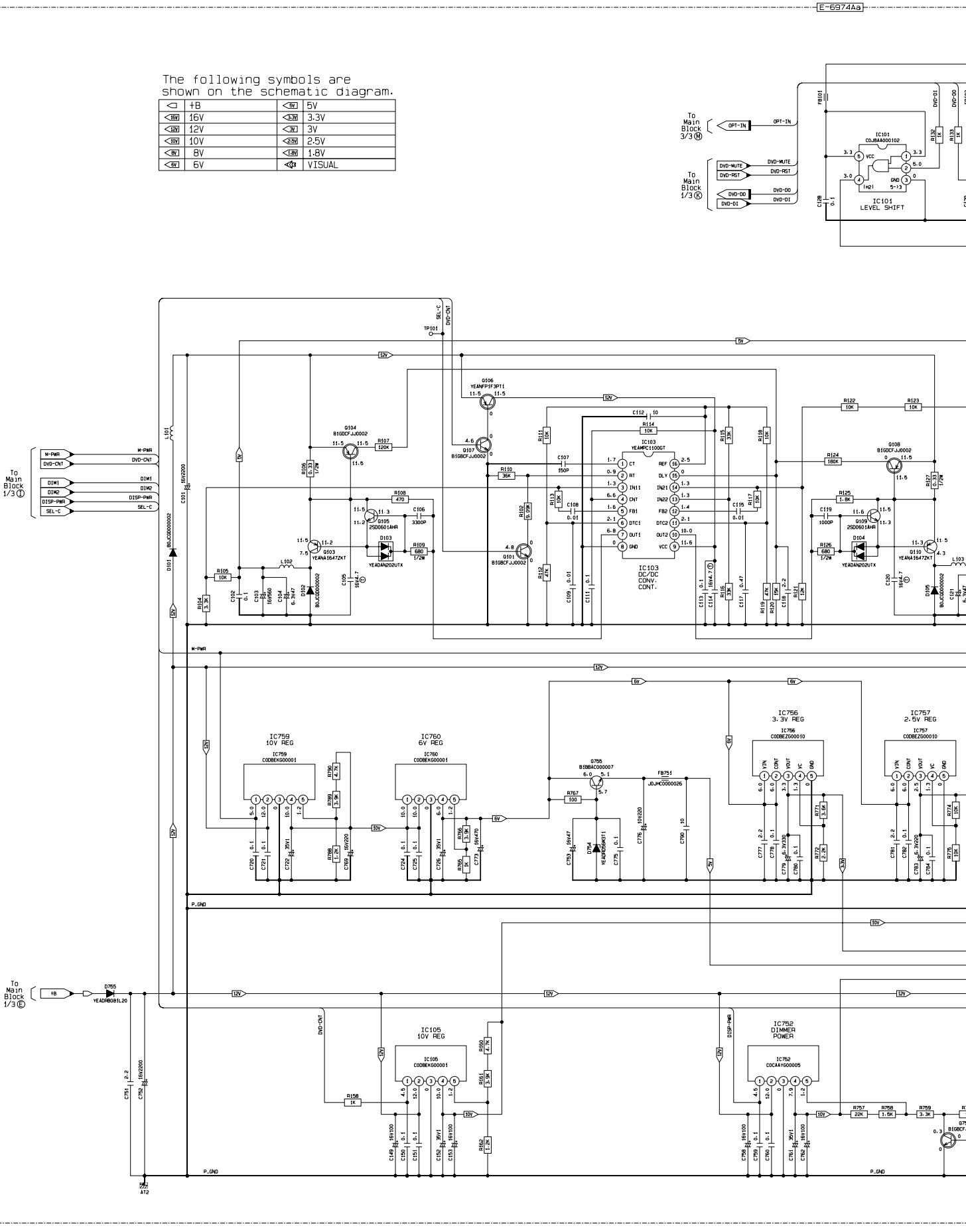

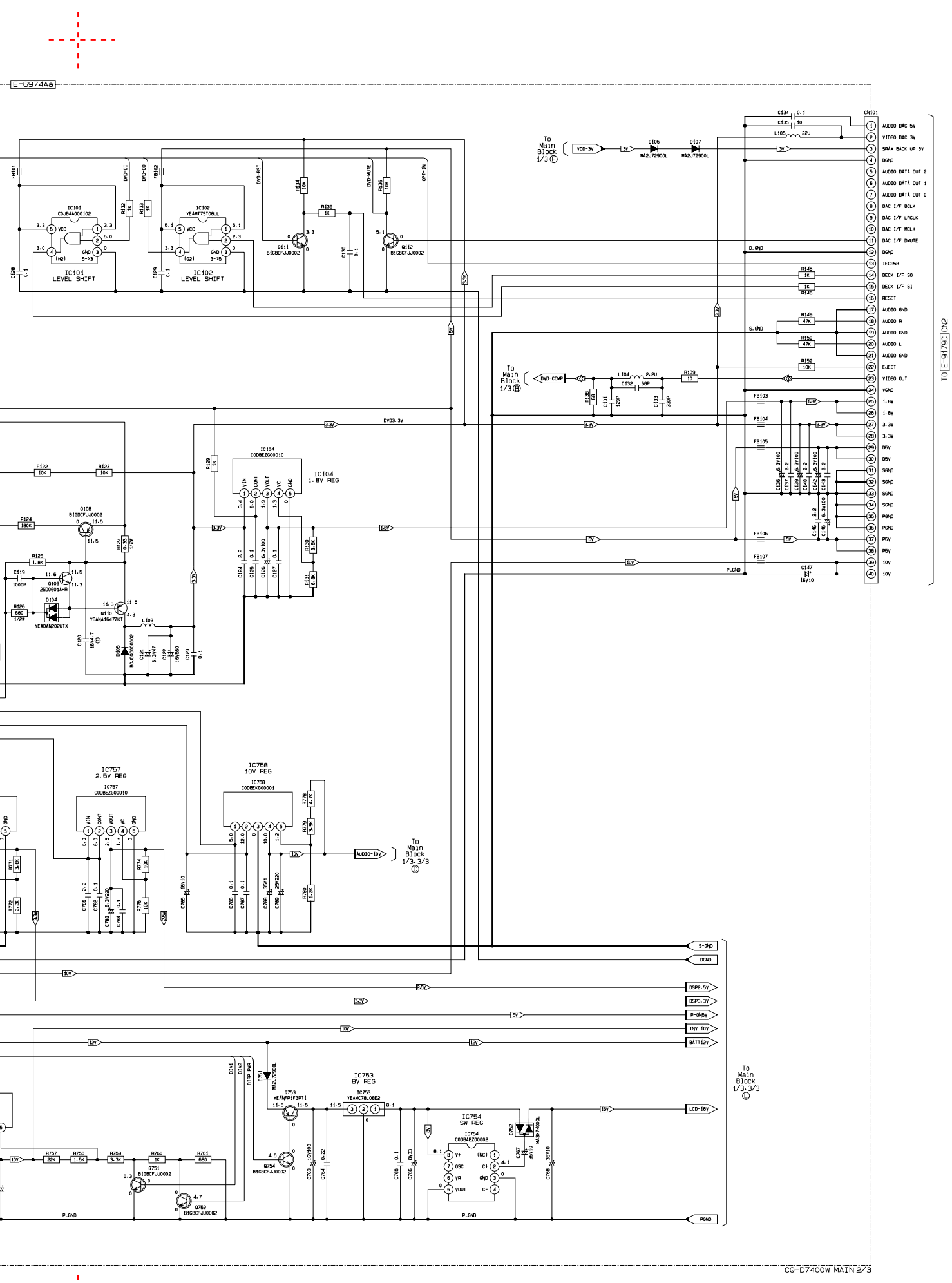
E-6974Aa
IC101
LEVEL SHIFT
IC102
LEVEL SHIFT
IC104
1.8V REG
IC757
2.5V REG
IC758
10V REG
IC753
8V REG
IC754
SW REG
CN101
TO E-9179C CN2
CD-D7400W MAIN 2/3

19.3. Main Block-3

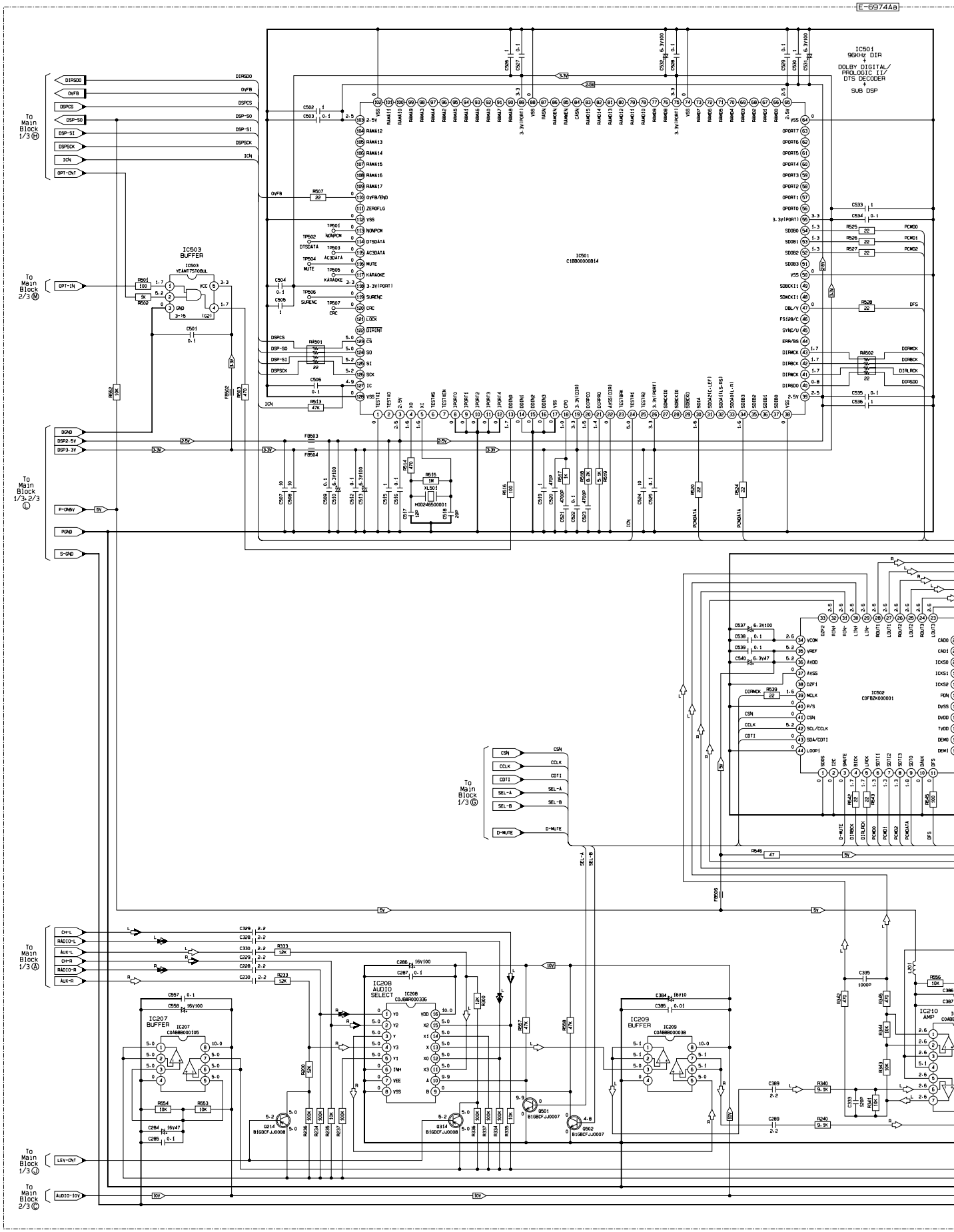

E-6974Aa

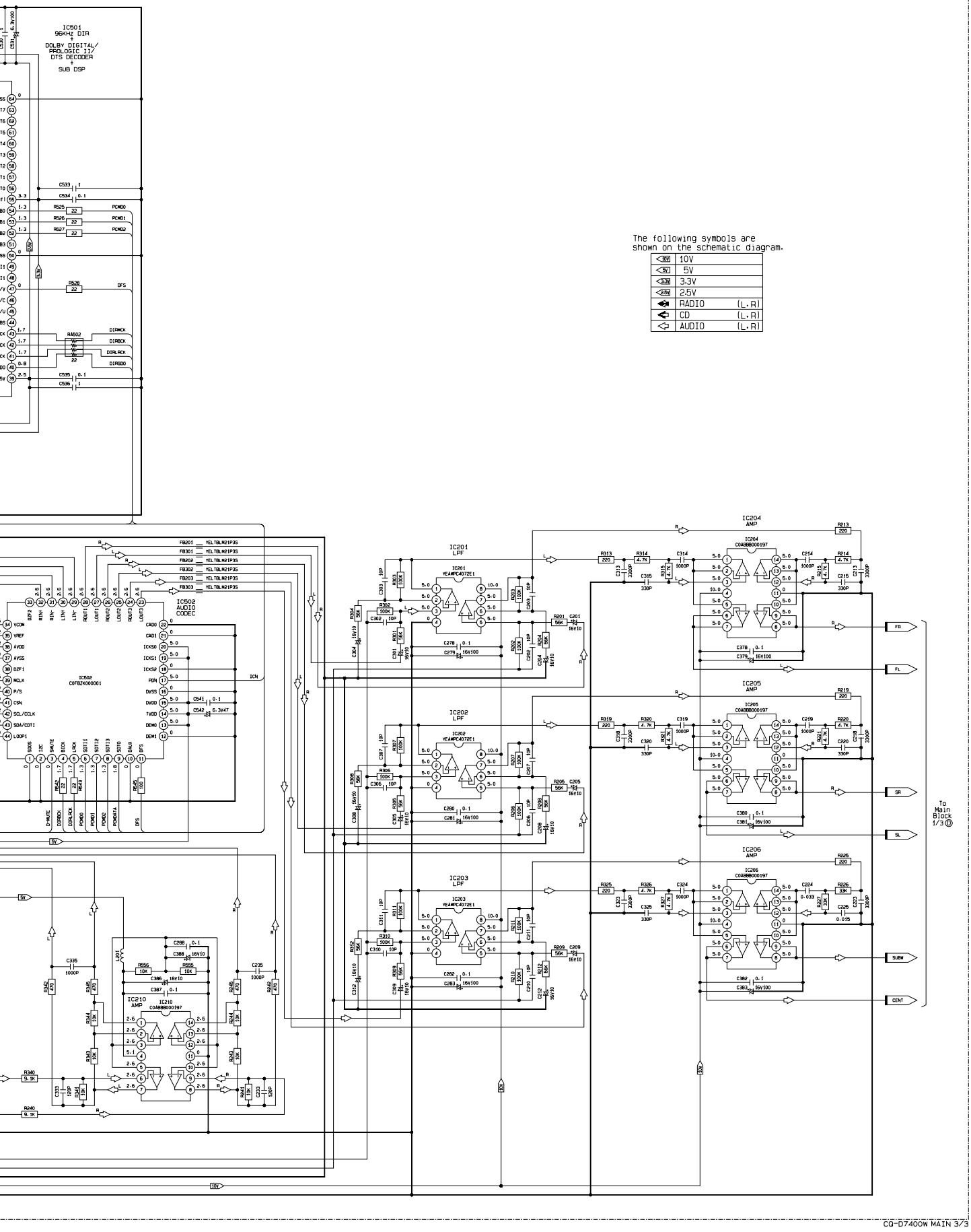

CQ-D7400W MAIN 3/3

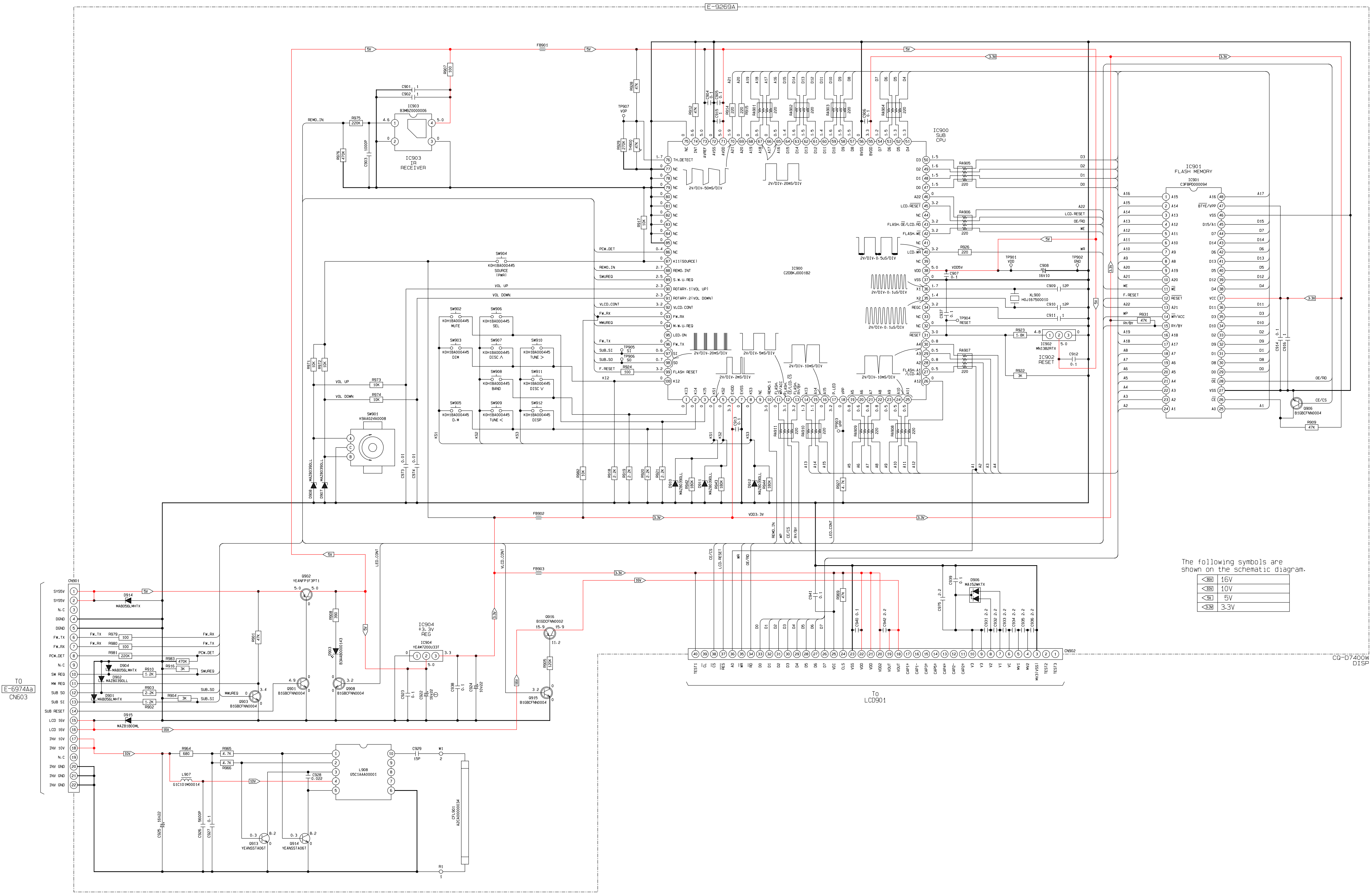
E-9269A
IC900 SUB CPU
IC900 C2DBKJ000182
IC901 FLASH MEMORY
IC901 C3FBPD000094
IC902 RESET
IC902 MN1382RTX
IC903 IR RECEIVER
IC903 B3MBZ0000006
IC904 +3.3V REG
IC904 YEAM7200U33T
SW901 K9AA024A0008
SW902 K0H1BA000445 MUTE
SW903 K0H1BA000445 DIM
SW904 K0H1BA000445 SOURCE (PWR)
SW905 K0H1BA000445 D.M
SW906 K0H1BA000445 SEL
SW907 K0H1BA000445 DISC ∧
SW908 K0H1BA000445 BAND
SW909 K0H1BA000445 TUNE <
SW910 K0H1BA000445 TUNE >
SW911 K0H1BA000445 DISC ∨
SW912 K0H1BA000445 DISP
XL900 H0J167500010
Q901 B1GBCFNN0004
Q902 YEANFP1F3PT1
Q903 B1GBCFNN0004
Q906 B1GBCFNN0004
Q908 B1GBCFNN0004
Q913 YEANSSTA06T
Q914 YEANSSTA06T
Q915 B1GBCFNN0004
Q916 B1GDCFNN0002
D901 MA8056LMHTX
D902 MAZ80390LL
D903 B3AAB0000143
D904 MA8056LMHTX
D906 MA152WKTX
D914 MA8056LMHTX
D915 MAZ81800ML
L907 G1C101M00014
L908 G5C1AAA00001
CFL901 A2CA00000034
CN901
TO E-6974Aa CN603
SYS5V
SYS5V
N.C
DGND
DGND
FW_TX
FW_RX
PCW_DET
N.C
SW REQ
MW REQ
SUB SO
SUB SI
SUB RESET
LCD 16V
LCD 16V
INV 10V
INV 10V
N.C
INV GND
INV GND
INV GND
CN902
To LCD901
2V/DIV.50mS/DIV
2V/DIV.20mS/DIV
2V/DIV.0.5uS/DIV
2V/DIV.0.1uS/DIV
2V/DIV.20mS/DIV
2V/DIV.5mS/DIV
2V/DIV.2mS/DIV
2V/DIV.10mS/DIV
The following symbols are shown on the schematic diagram.
16V 16V
10V 10V
5V 5V
3.3V 3.3V
CQ-D7400W DISP

To Optical Pick-up Ass'y

To Loading Motor

E-9179C

To Servo Block 2/2 (A)

To Servo Block 2/2 (I)

To Servo Block 2/2 (J)

To Servo Block 2/2 (K)

To Servo Block 2/2 (B)

To Servo Block 2/2 (C)

To Servo Block 2/2 (D)

To Servo Block 2/2 (E)

To Servo Block 2/2 (F)

To Servo Block 2/2 (G)

To Servo Block 2/2 (H)

IC101 AN8703FH-Y RF AMP. LD APC ERROR AMP

IC201 MN752BEGAUC DSP

IC301 MN102H60GAE CPU

IC303 C3FBL0000012 DRAM

IC401 C0GBY0000012 COIL/MOTOR DRIVE

IC202 MN3821JP RESET

IC204 YEAMT5T08UL AND

The following symbols are shown on the schematic diagram.

<10V	10V
<5V	5V
<3V	3V
<1.8V	1.8V

YGFD19142
SERVO 1/2

IC501

Waveform	Pin No.	Waveform	Pin No.
2V/DIV 10mS/DIV	3PIN 6PIN 8PIN 14PIN ~ 15PIN 25PIN ~ 26PIN 29PIN ~ 31PIN 164PIN ~ 167PIN 170PIN ~ 177PIN 180PIN ~ 193PIN	2V/DIV 0.1uS/DIV	33PIN ~ 88PIN
2V/DIV 10mS/DIV	27PIN ~ 32PIN	0.1V/DIV 0.5uS/DIV	92PIN
2V/DIV 10mS/DIV	30PIN	0.2V/DIV 10uS/DIV	124PIN
2V/DIV 0.1uS/DIV	3PIN ~ 35PIN ~ 38PIN 40PIN ~ 43PIN 45PIN ~ 47PIN 49PIN ~ 51PIN 54PIN ~ 57PIN 59PIN ~ 63PIN 65PIN ~ 67PIN 69PIN 89PIN ~ 103PIN ~ 104PIN 107PIN	2V/DIV 20uS/DIV	196PIN

IC501
MN67753-MPEG

To Servo Block 1/2 Ⓑ
To Servo Block 1/2 Ⓒ
To Servo Block 1/2 Ⓓ
To Servo Block 1/2 Ⓔ
To Servo Block 1/2 Ⓕ
To Servo Block 1/2 Ⓖ
To Servo Block 1/2 Ⓗ
To Servo Block 1/2 Ⓐ
To Servo Block 1/2 Ⓘ
To Spindle/Traverse Motor Ass'y
To LED Ass'y
To E-6974Aa CN101

The following symbols are shown on the schematic diagram.

10V	10V	1.8V	1.8V
5V	5V	VISUAL	VISUAL
3V	3V	AUDIO (L.R)	AUDIO (L.R)

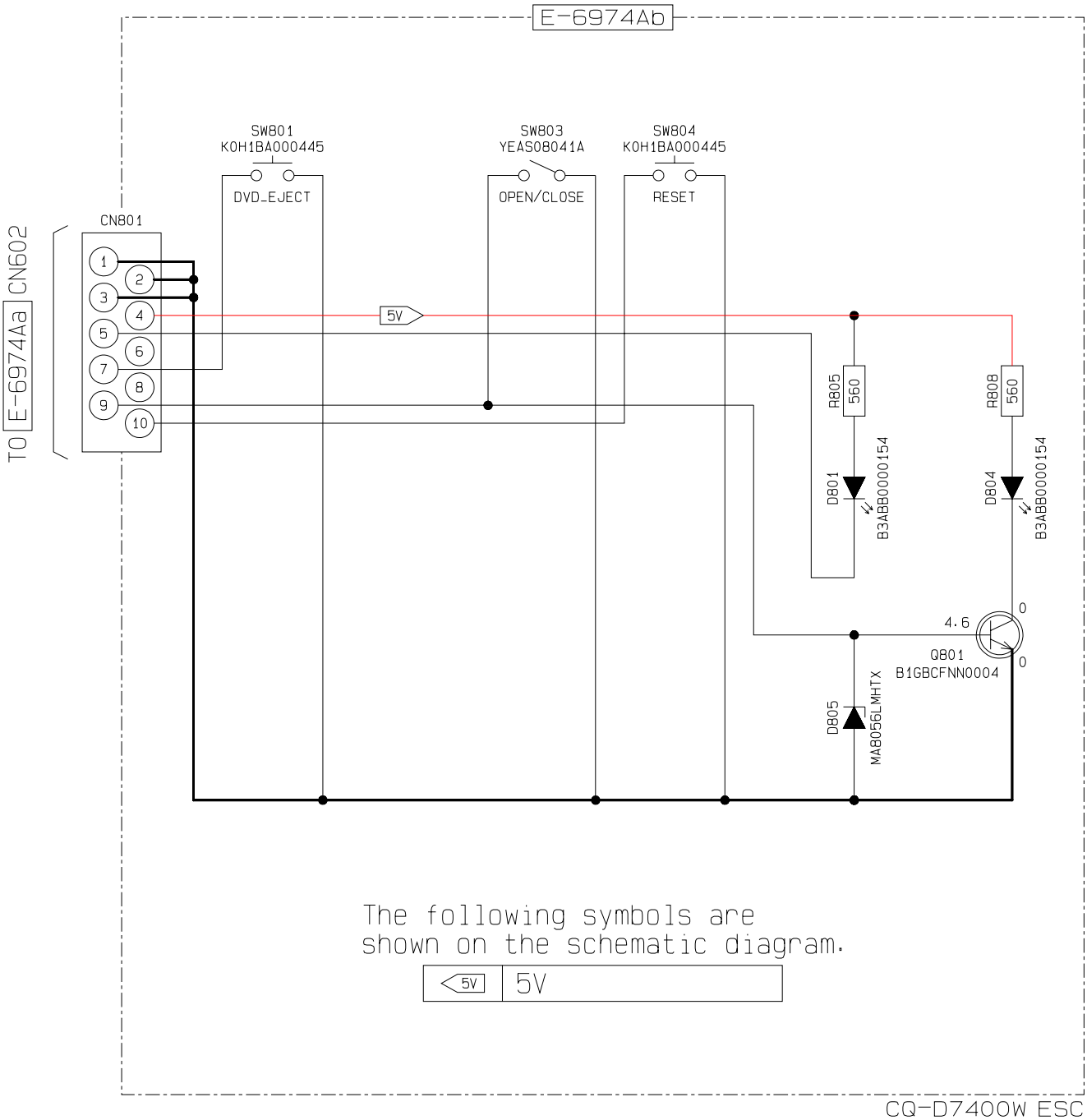

The following symbols are shown on the schematic diagram.

5V	5V

E-6974Aa

The following symbols are shown on the schematic diagram.

+B	
ACC	
16V	
12V	
10V	
8V	
5V	
3V	
RADIO	(L,R)
CD	(L,R)
VISUAL	
AUDIO	(L,R)

TO E-6974Ab CN801

TO E-9269A CN901

CQ-D7400W MAIN 1/3

The following symbols are shown on the schematic diagram.

◁	+B	5V	5V
16V	16V	3.3V	3.3V
12V	12V	3V	3V
10V	10V	2.5V	2.5V
8V	8V	1.8V	1.8V
6V	6V	VISUAL	VISUAL

IC501
96kHz DIR
+
DOLBY DIGITAL/
PROLOGIC II/
DTS DECODER
+
SUB DSP

IC501
C1BB000000814

IC503
BUFFER

IC502
AUDIO
CODEC

IC502
C0FBZK000001

IC201
LPF

IC202
LPF

IC203
LPF

IC204
AMP

IC205
AMP

IC206
AMP

IC207
BUFFER

IC208
AUDIO
SELECT

IC209
BUFFER

IC210
AMP

The following symbols are
shown on the schematic diagram.

10V	10V	
5V	5V	
3.3V	3.3V	
2.5V	2.5V	
RADIO	(L,R)	
CD	(L,R)	
AUDIO	(L,R)	

Specification

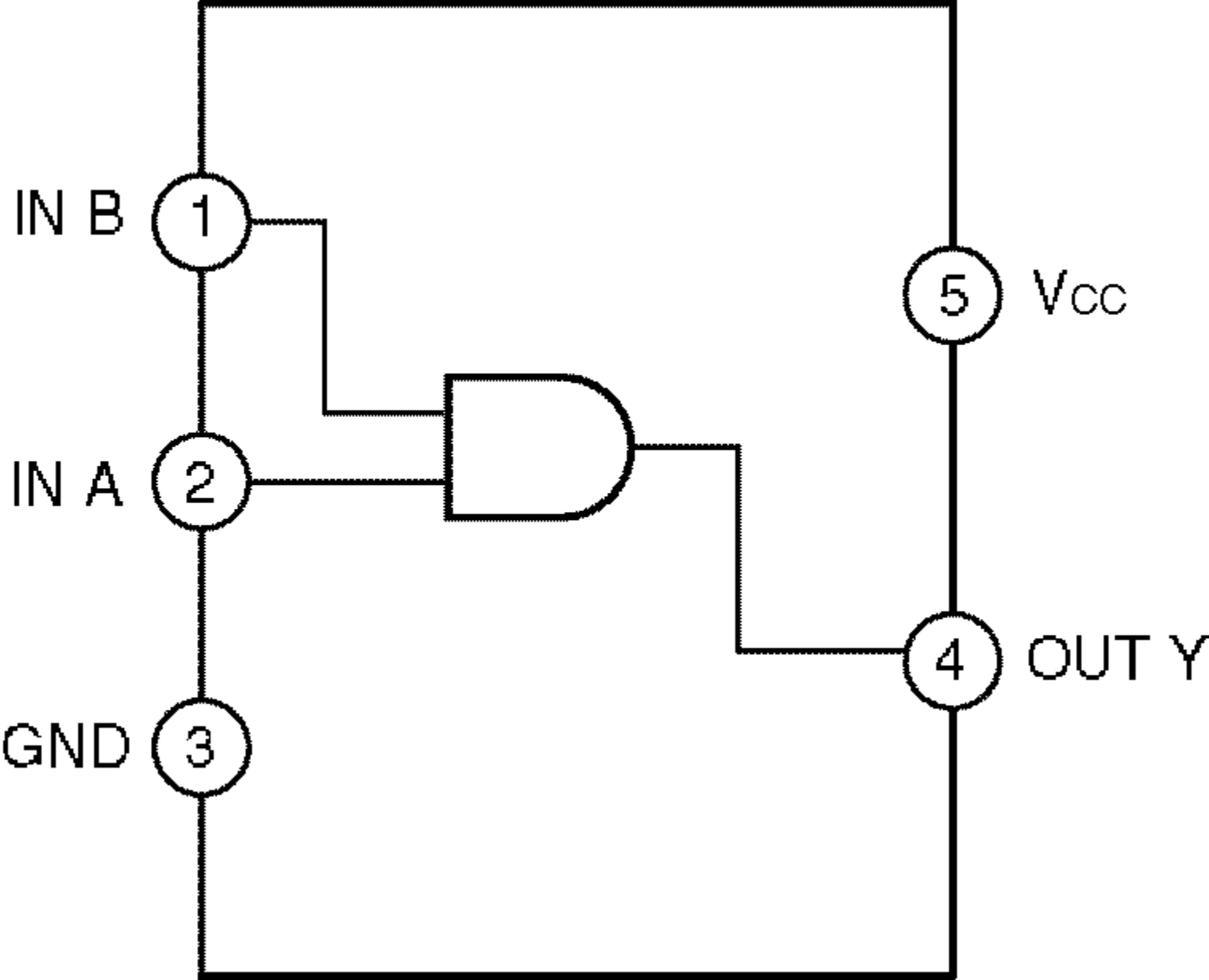
IN B
1
IN A
2
GND
3
5
VCC
4
OUT Y

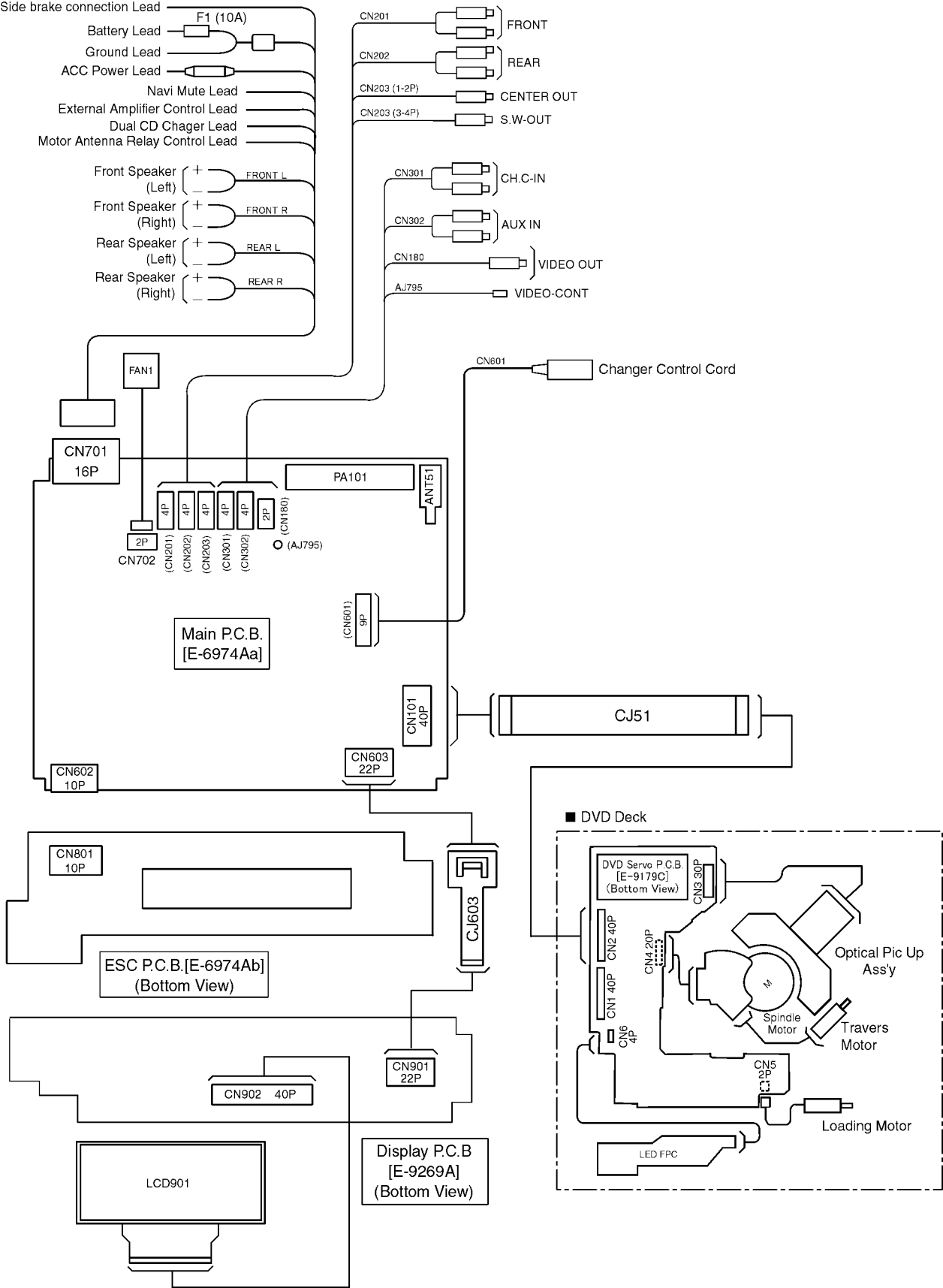
Side brake connection Lead
F1 (10A)
Battery Lead
Ground Lead
ACC Power Lead
Navi Mute Lead
External Amplifier Control Lead
Dual CD Chager Lead
Motor Antenna Relay Control Lead
Front Speaker (Left)
FRONT L
Front Speaker (Right)
FRONT R
Rear Speaker (Left)
REAR L
Rear Speaker (Right)
REAR R
CN201
FRONT
CN202
REAR
CN203 (1-2P)
CENTER OUT
CN203 (3-4P)
S.W-OUT
CN301
CH.C-IN
CN302
AUX IN
CN180
VIDEO OUT
AJ795
VIDEO-CONT
FAN1
CN601
Changer Control Cord
CN701
16P
PA101
ANT51
4P
4P
4P
4P
4P
2P
(CN180)
2P
CN702
(CN201)
(CN202)
(CN203)
(CN301)
(CN302)
(AJ795)
(CN601)
9P
Main P.C.B.
[E-6974Aa]
CN101
40P
CJ51
CN603
22P
CN602
10P
■ DVD Deck
CN801
10P
CJ603
DVD Servo P.C.B.
[E-9179C]
(Bottom View)
CN3 30P
CN2 40P
CN4 20P
CN1 40P
CN6
4P
Optical Pic Up
Ass'y
Spindle
Motor
Travers
Motor
CN5
2P
Loading Motor
LED FPC
ESC P.C.B.[E-6974Ab]
(Bottom View)
CN901
22P
CN902 40P
LCD901
Display P.C.B
[E-9269A]
(Bottom View)

■ DVD Deck Block

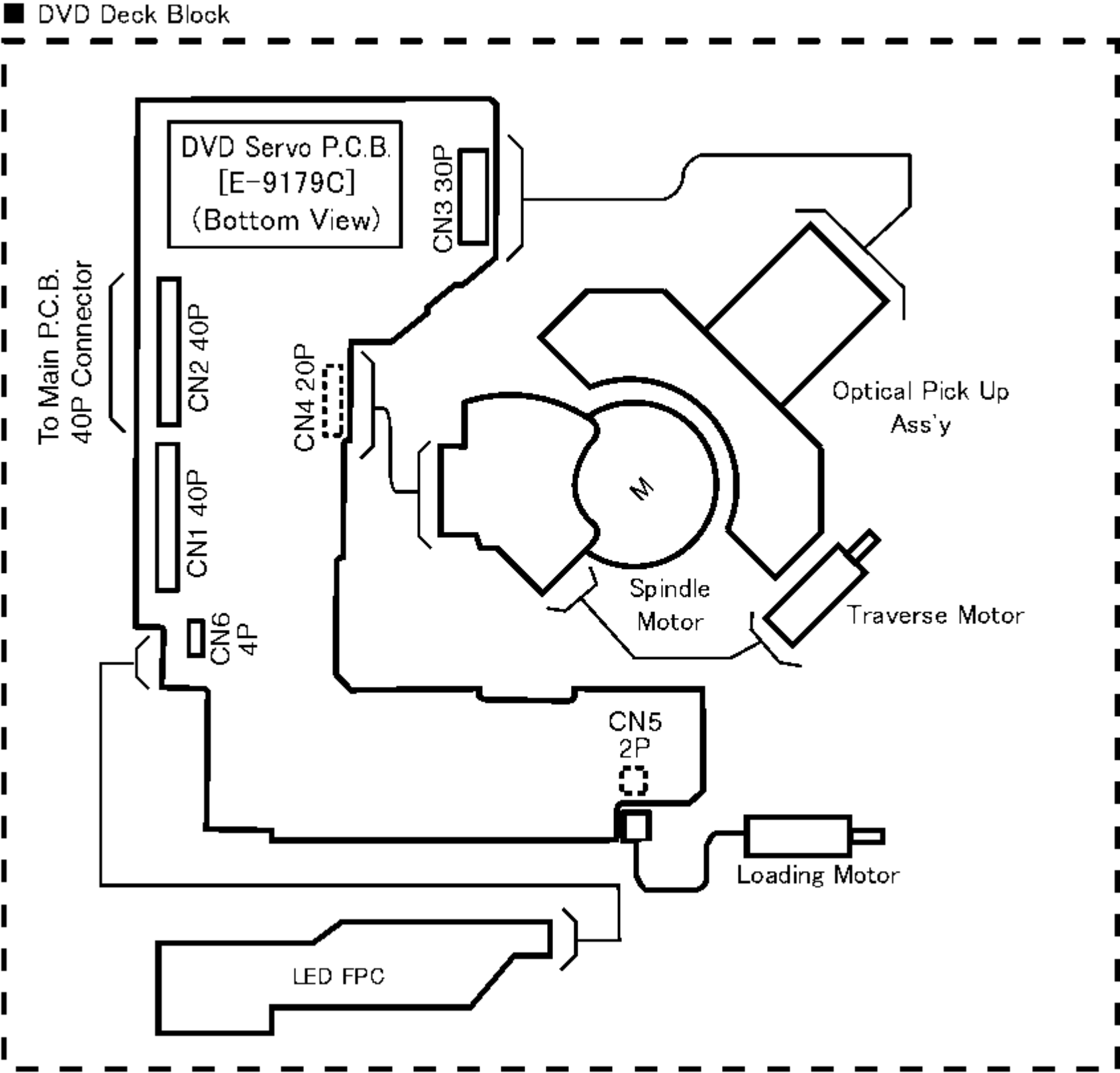

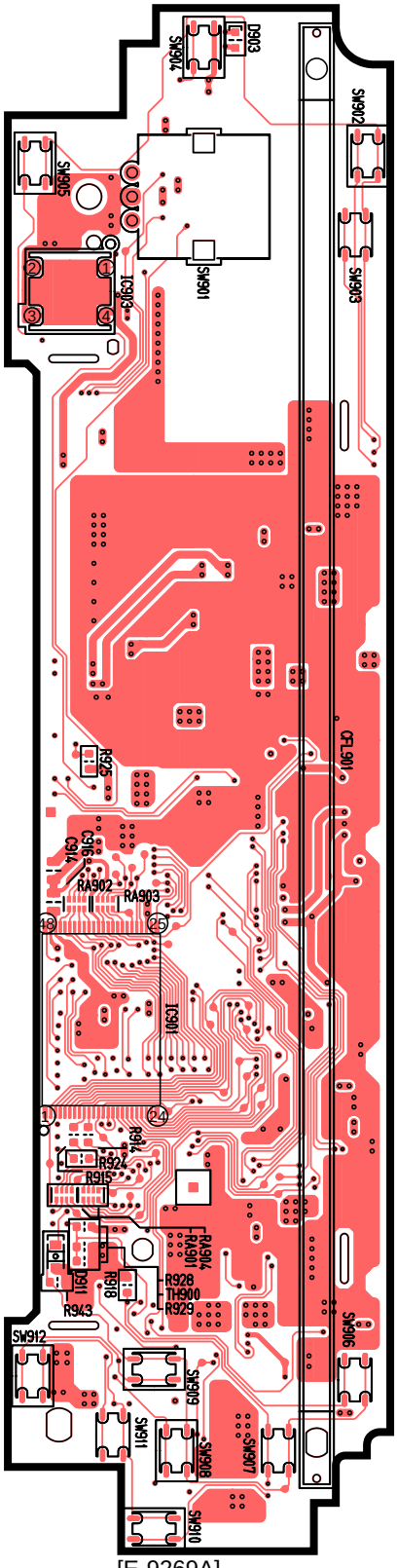

[E-9269A]
[Top View]

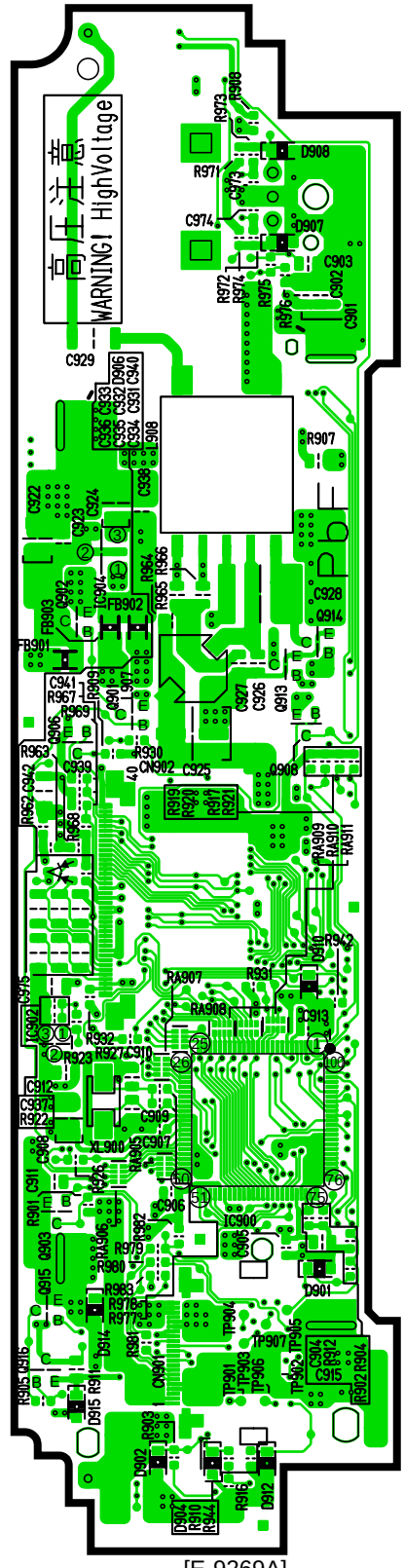

[E-9269A]
[Bottom View]

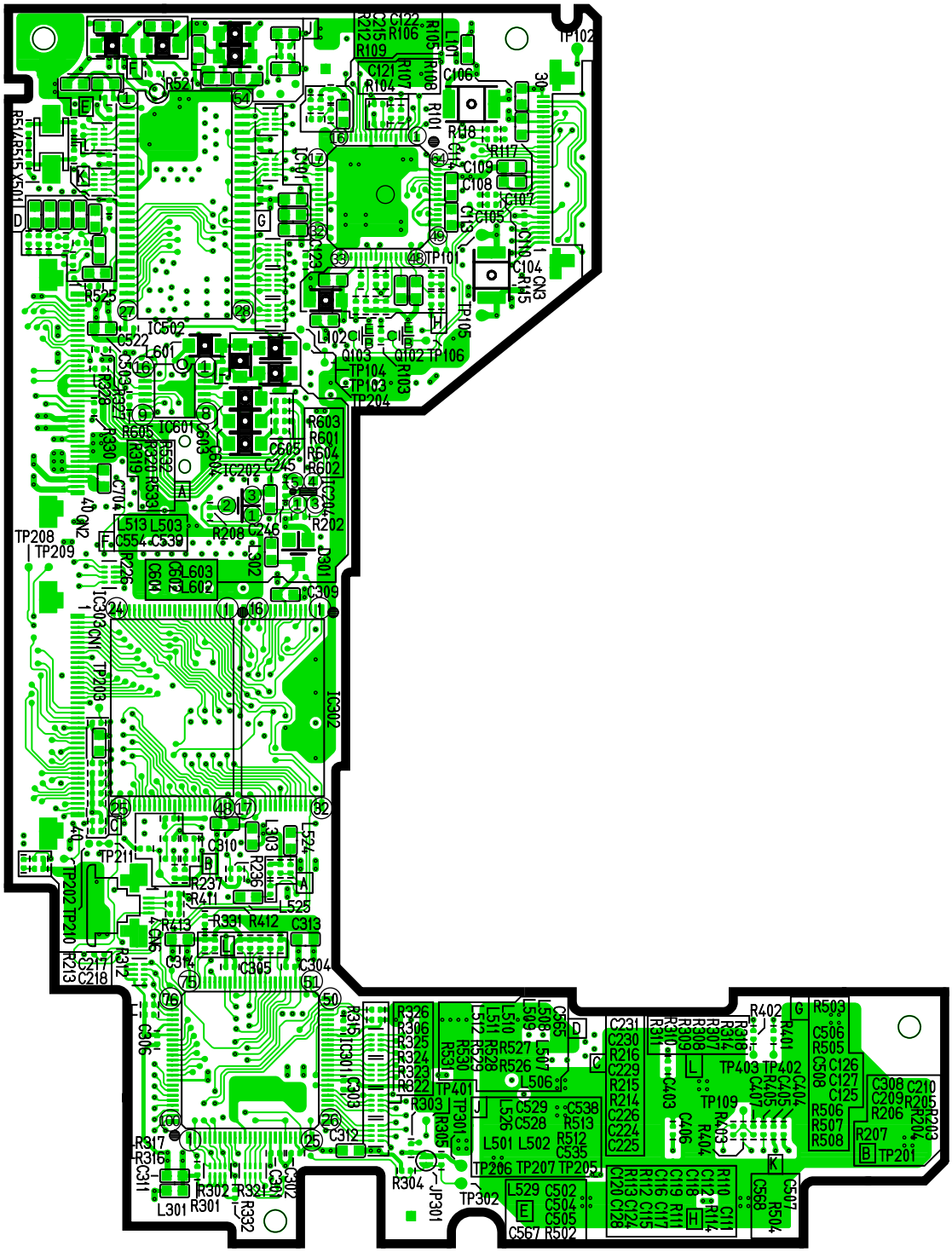

[E-9179C][Bottom View]

YGFD19142 DVD Servo P.C.B

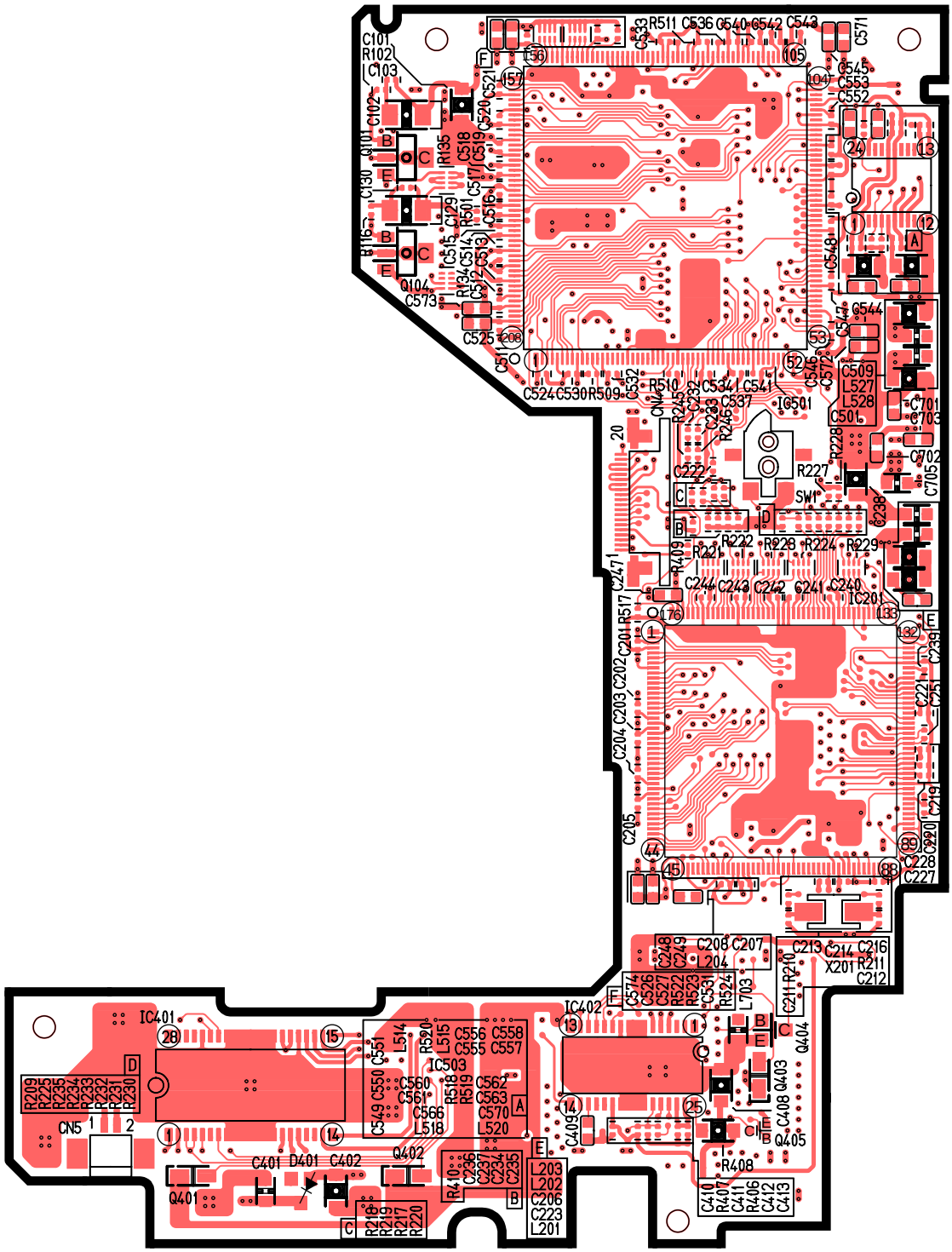

[E-9179C][Top View]

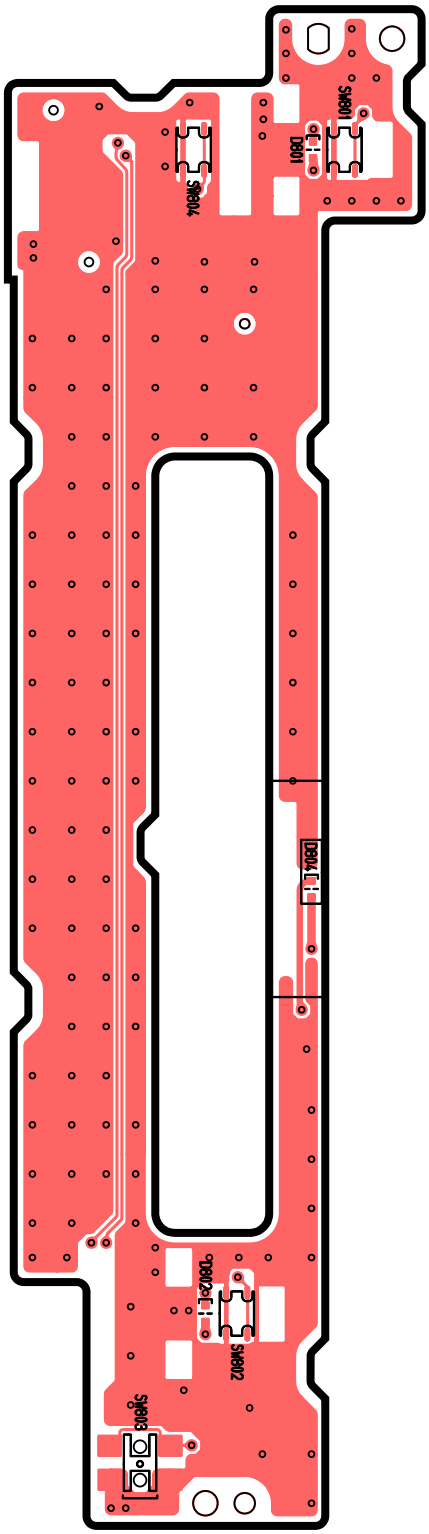

[E-6974Ab]
[Top View]

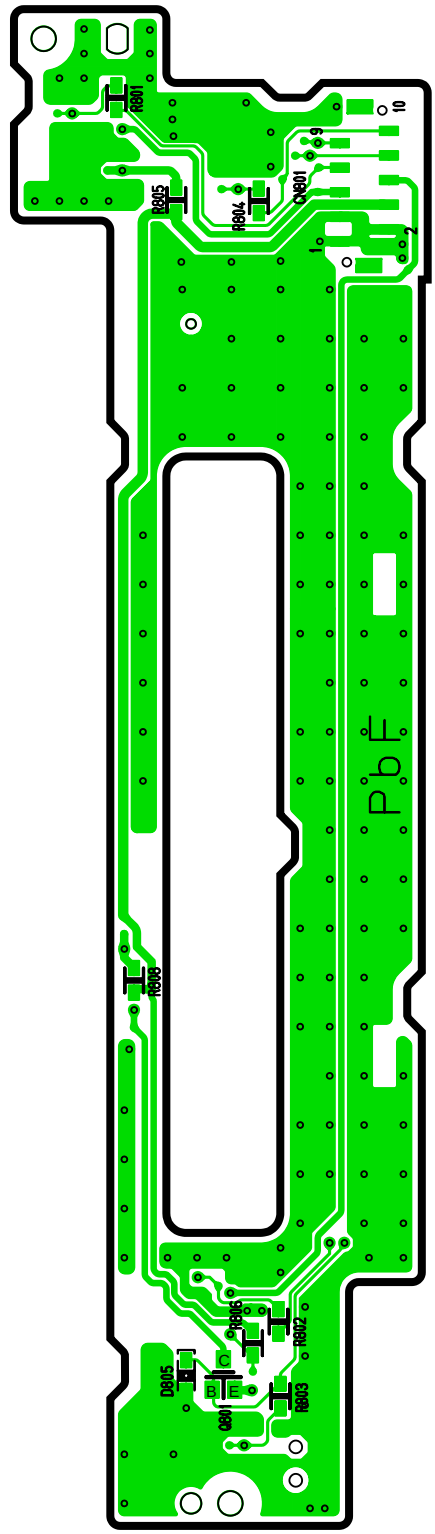

[E-6974Ab]
[Bottom View]

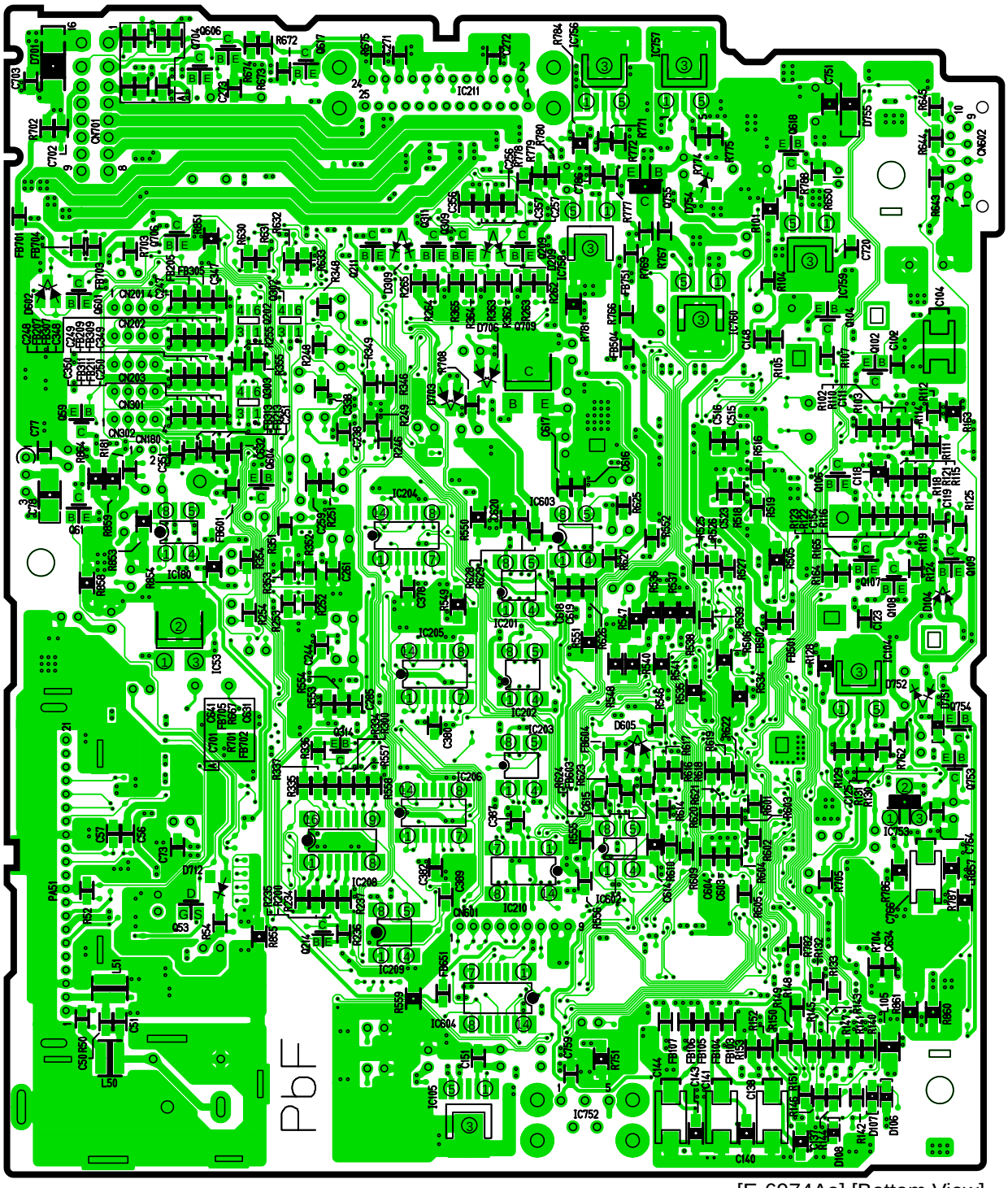

[E-6974Aa] [Bottom View]

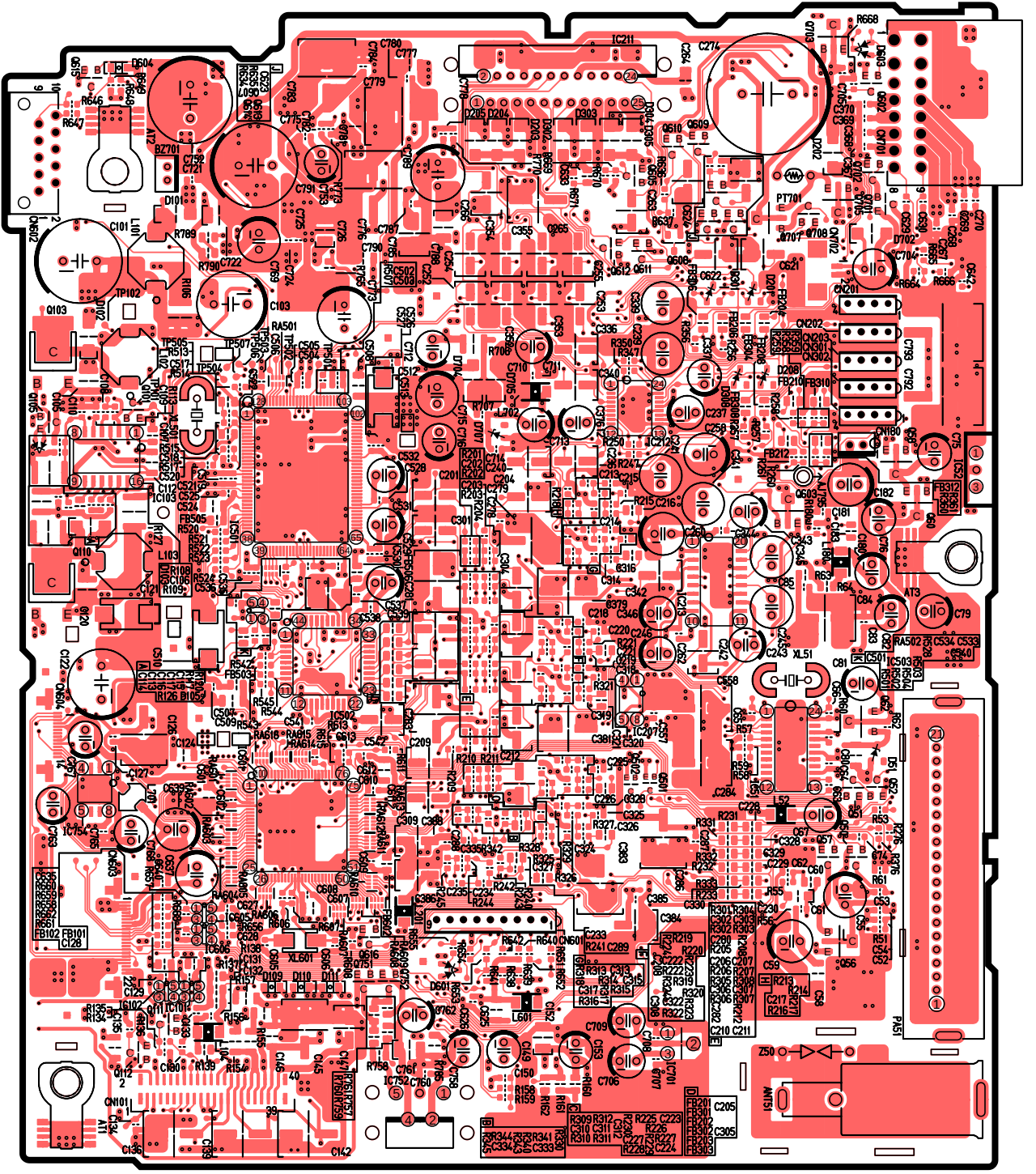

[E-6974Aa][Top View]

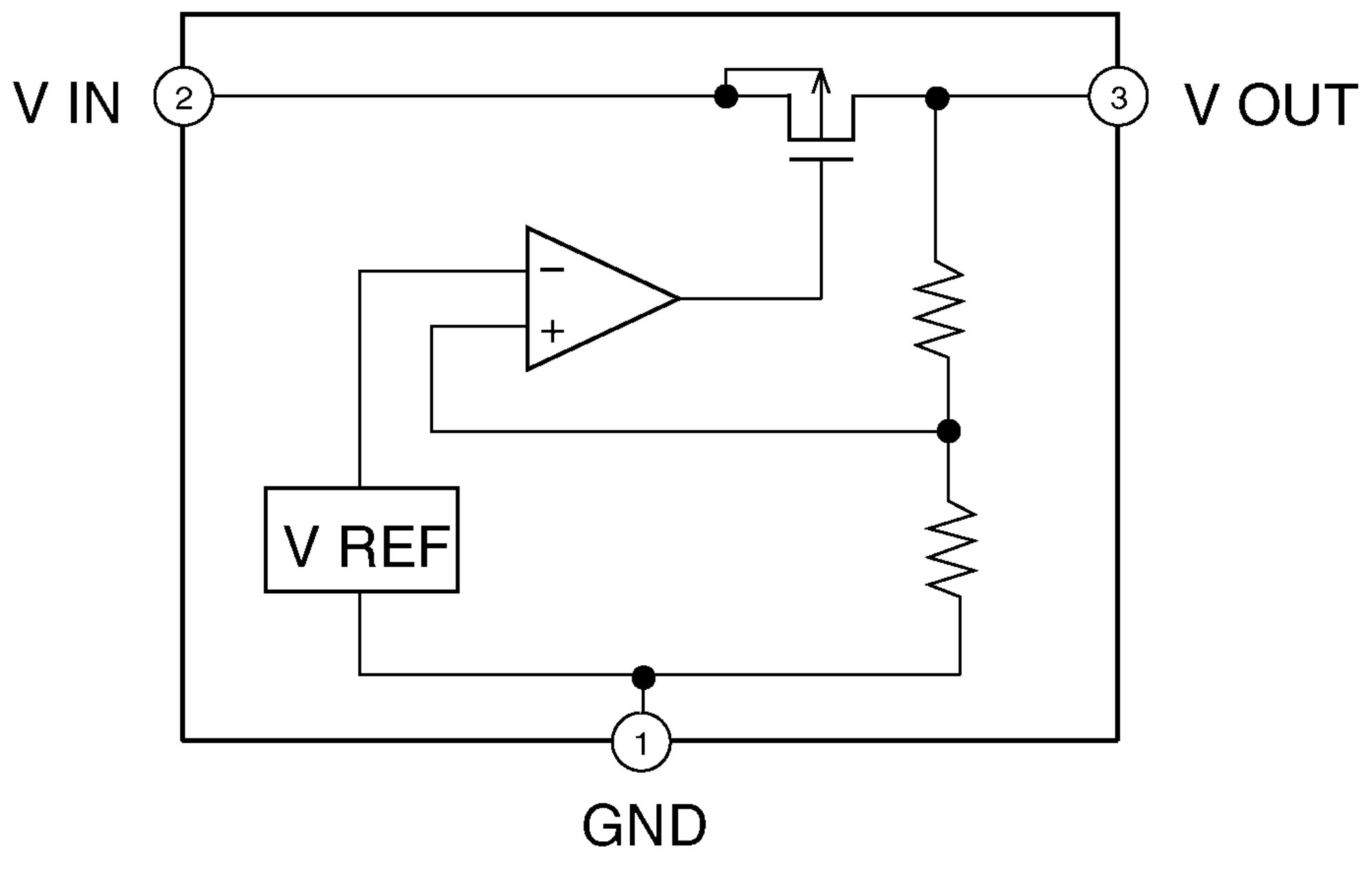
V IN
2
3
V OUT
−
+
V REF
1
GND