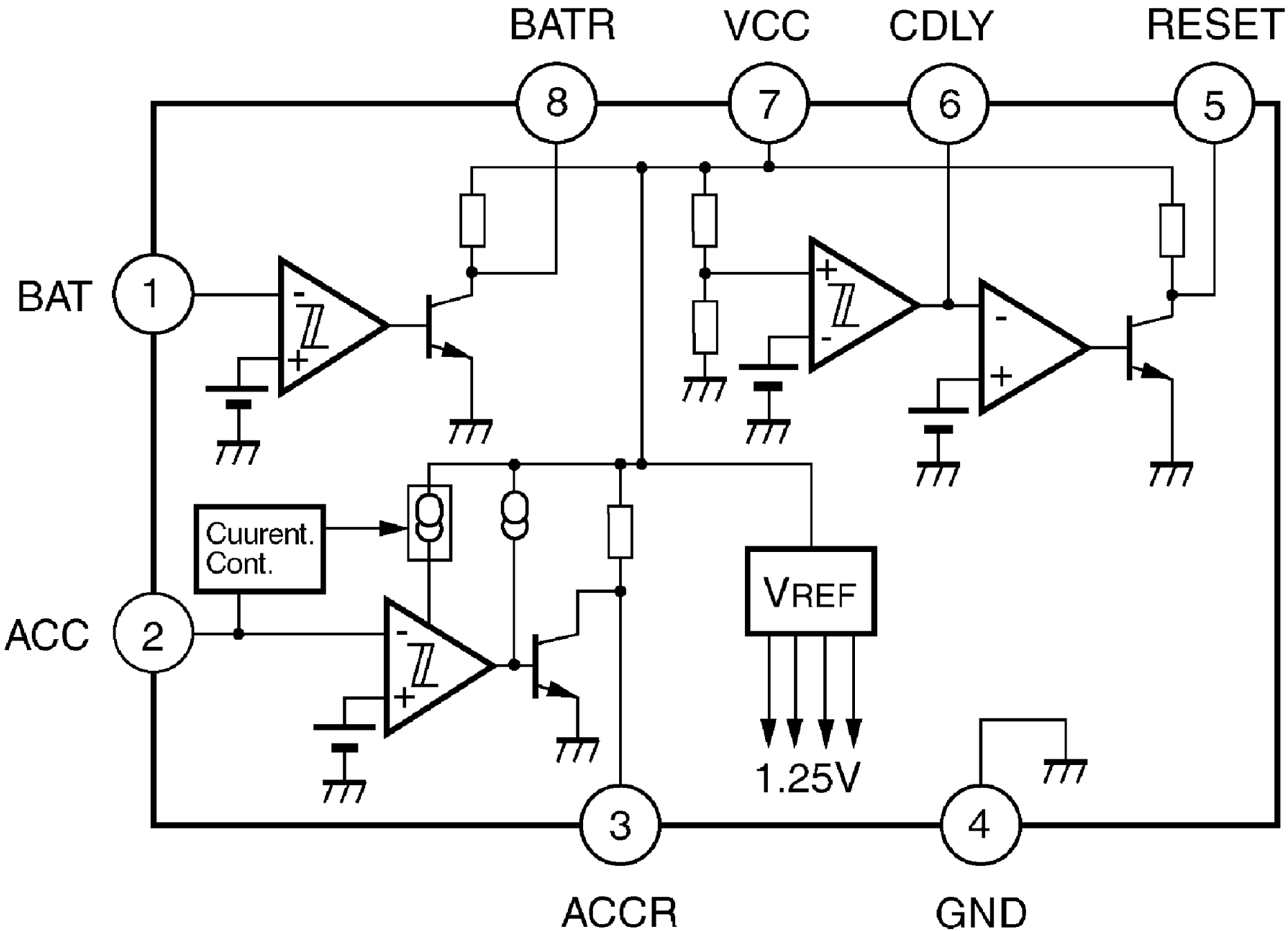
BATR
VCC
CDLY
RESET
8
7
6
5
BAT
1
Cuurent.
Cont.
VREF
ACC
2
1.25V
3
4
ACCR
GND

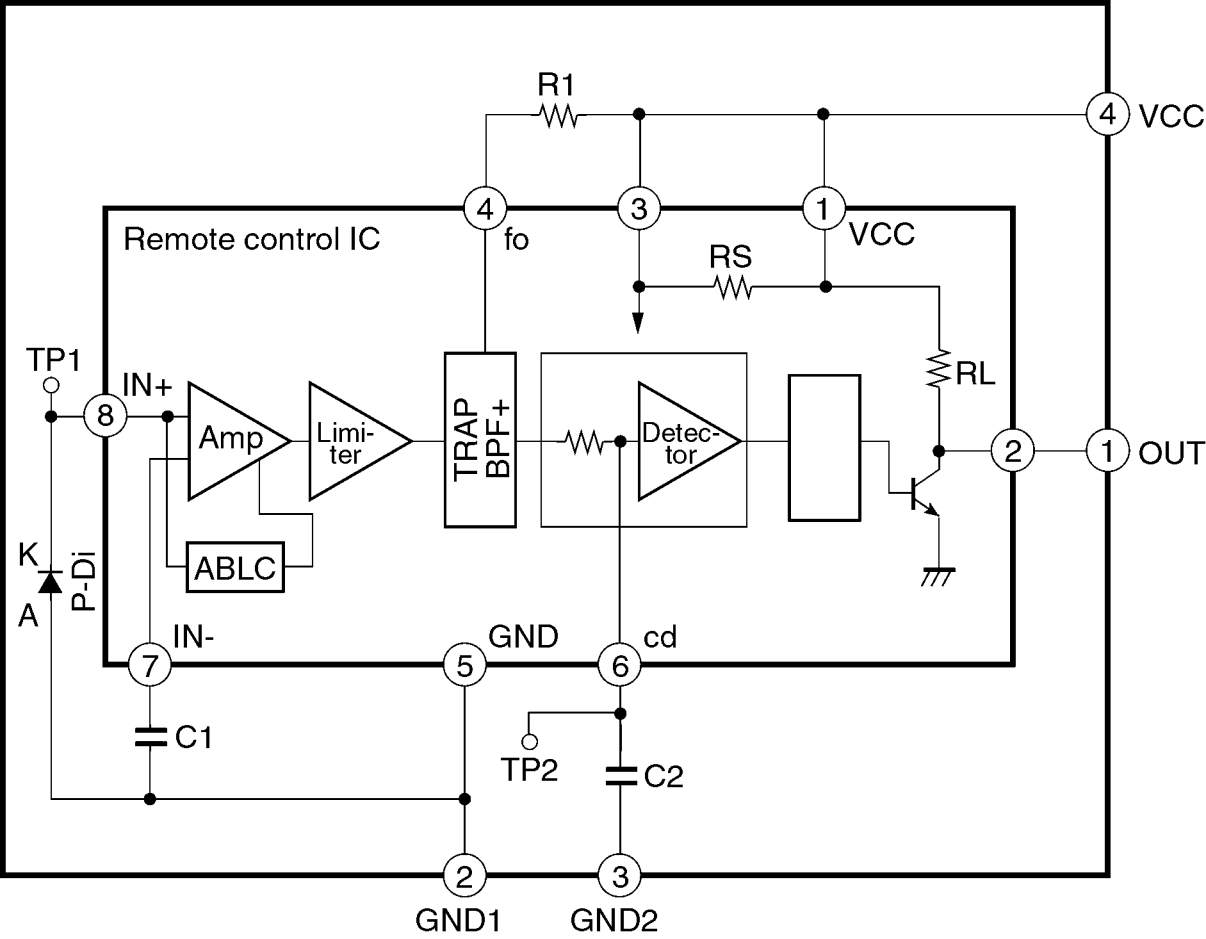
R1
4
VCC
Remote control IC
4
fo
3
1
VCC
RS
TP1
IN+
8
Amp
Limi-
ter
TRAP
BPF+
Detec-
tor
RL
2
1
OUT
K
P-Di
A
ABLC
IN-
7
GND
5
cd
6
C1
TP2
C2
2
GND1
3
GND2

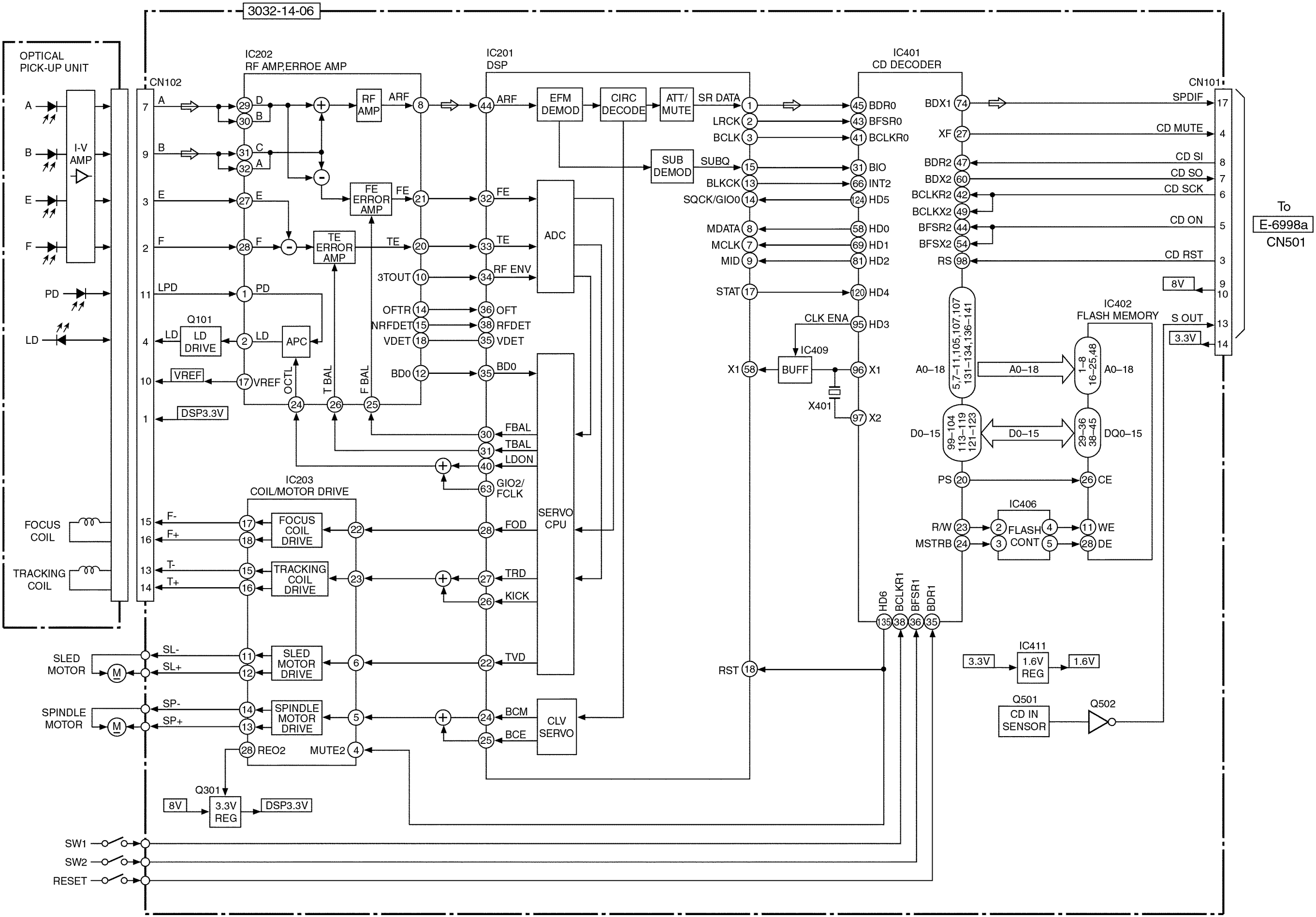

CQ-C9800N/C9700N YGFD15281 CD SERVO BLOCK

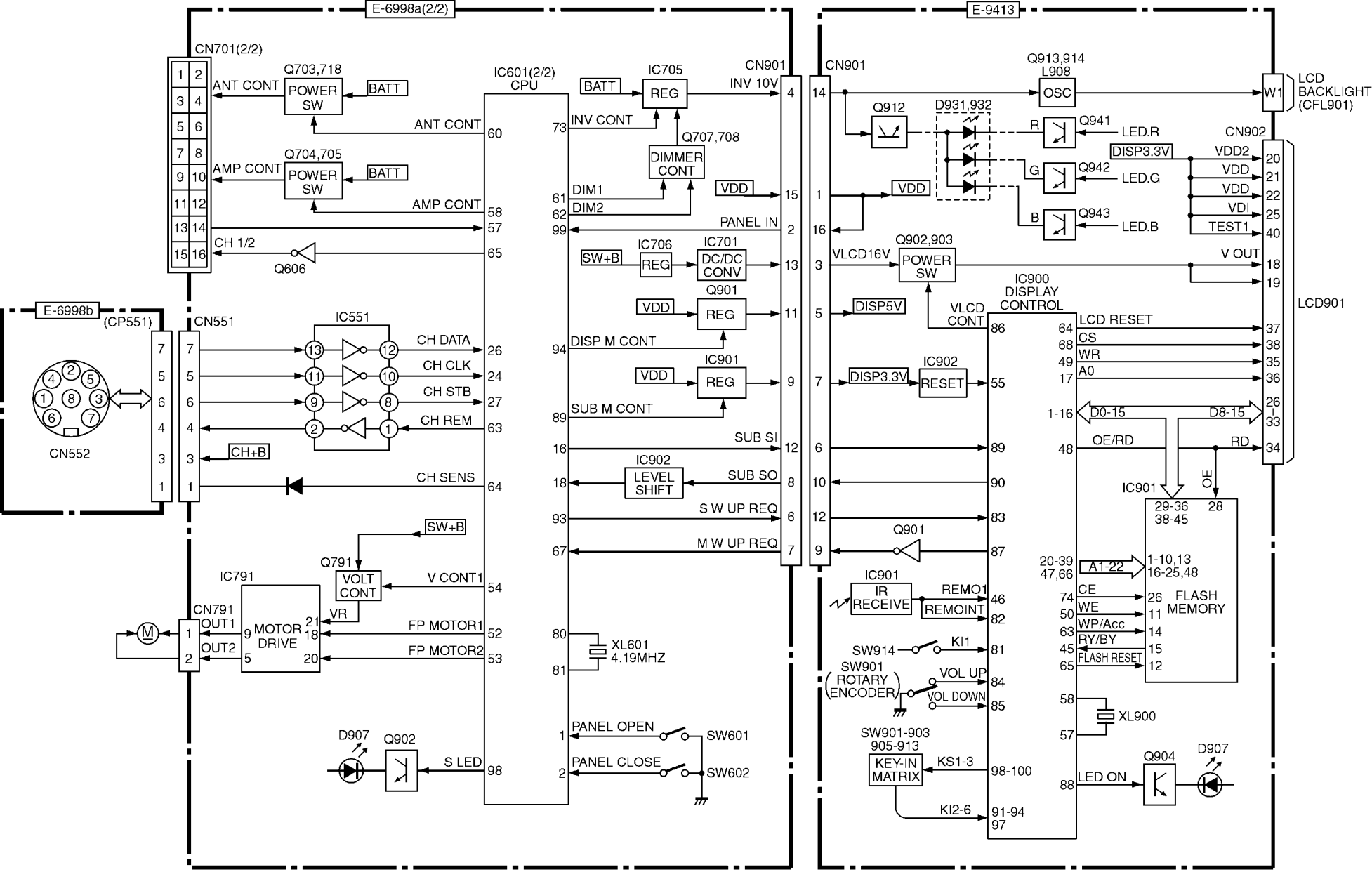
E-6998a(2/2)
E-9413
E-6998b
CN701(2/2)
Q703,718
POWER SW
BATT
ANT CONT
Q704,705
AMP CONT
CH 1/2
Q606
IC601(2/2) CPU
IC705
REG
CN901
INV 10V
INV CONT
Q707,708
DIMMER CONT
DIM1
DIM2
VDD
PANEL IN
IC706
IC701
SW+B
DC/DC CONV
Q901
DISP M CONT
IC901
SUB M CONT
SUB SI
IC902
LEVEL SHIFT
SUB SO
S W UP REQ
M W UP REQ
XL601 4.19MHZ
PANEL OPEN
PANEL CLOSE
SW601
SW602
CN551
IC551
CH DATA
CH CLK
CH STB
CH REM
CH+B
CH SENS
(CP551)
CN552
Q791
VOLT CONT
V CONT1
VR
IC791
MOTOR DRIVE
CN791
OUT1
OUT2
FP MOTOR1
FP MOTOR2
D907
Q902
S LED
Q913,914
L908
OSC
W1
LCD BACKLIGHT (CFL901)
Q912
D931,932
Q941
Q942
Q943
LED.R
LED.G
LED.B
DISP3.3V
CN902
VDD2
VDD
VDI
TEST1
Q902,903
POWER SW
VLCD16V
V OUT
LCD901
DISP5V
IC900 DISPLAY CONTROL
VLCD CONT
IC902
RESET
LCD RESET
CS
WR
A0
D0-15
D8-15
OE/RD
RD
OE
IC901
FLASH MEMORY
A1-22
CE
WE
WP/Acc
RY/BY
FLASH RESET
IR RECEIVE
REMO1
REMOINT
SW914
KI1
SW901 (ROTARY ENCODER)
VOL UP
VOL DOWN
XL900
SW901-903 905-913
KEY-IN MATRIX
KS1-3
KI2-6
LED ON
Q904
D907

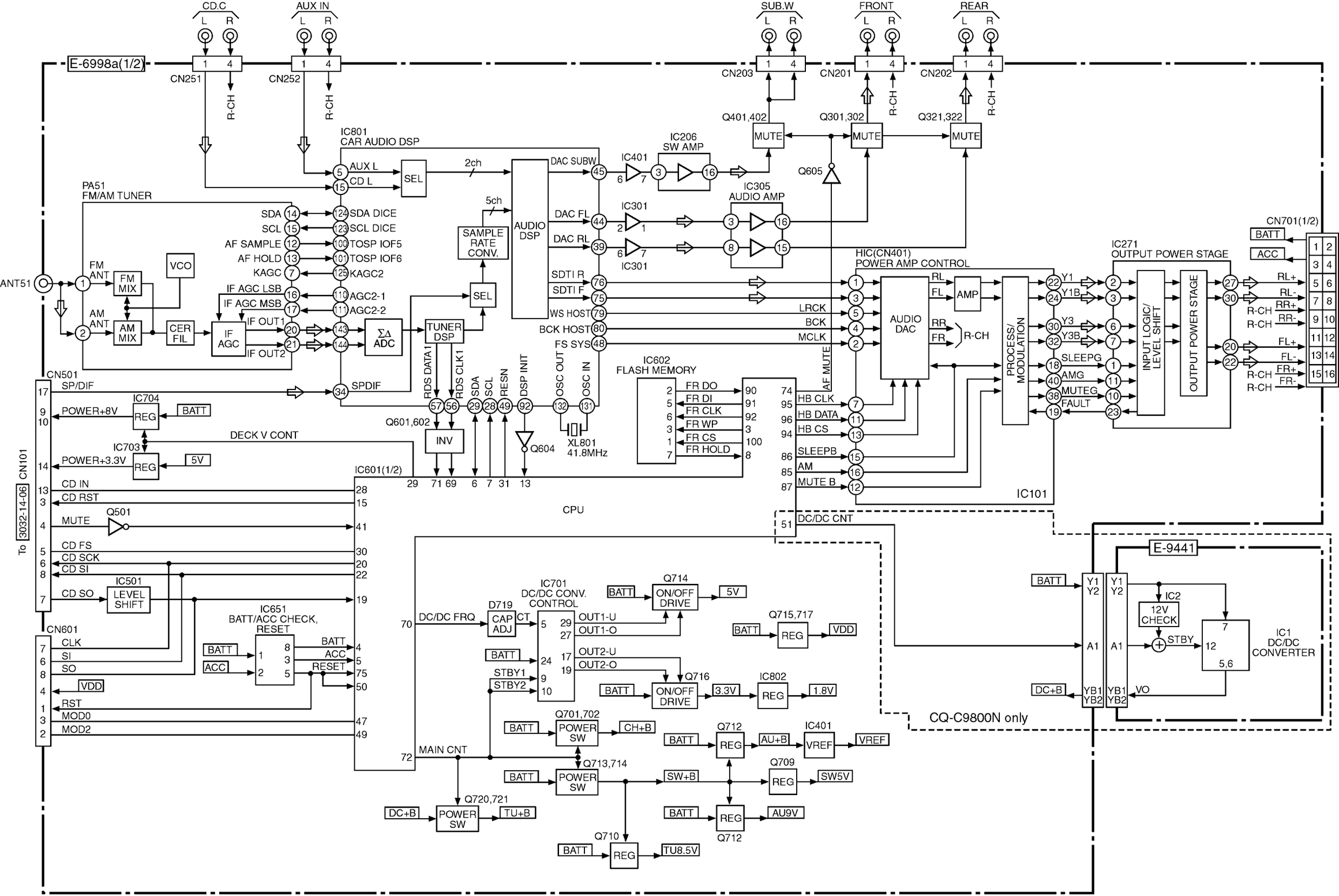

CQ-C9800N/C9700N MAIN-1/DC-DC

■How to remove the flexible PCB(AP2)

1. Remove the trim plate.

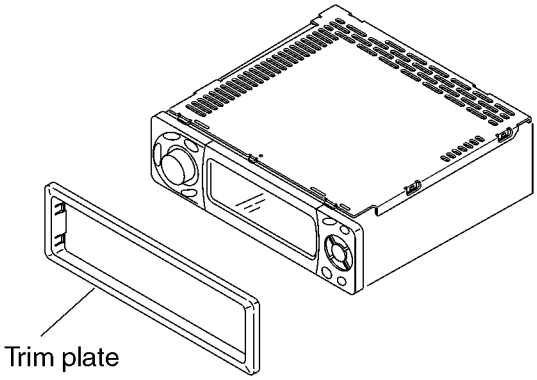

2. Remove the removable face plate unit by pressing the release button.

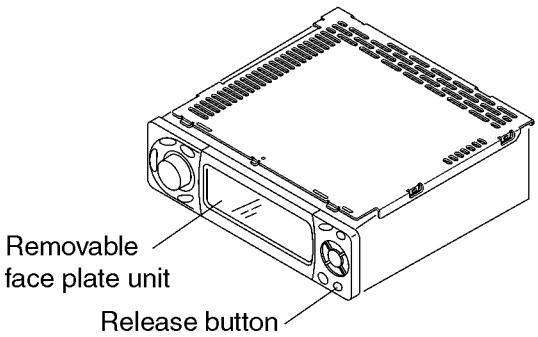

3. Take off the top cover.

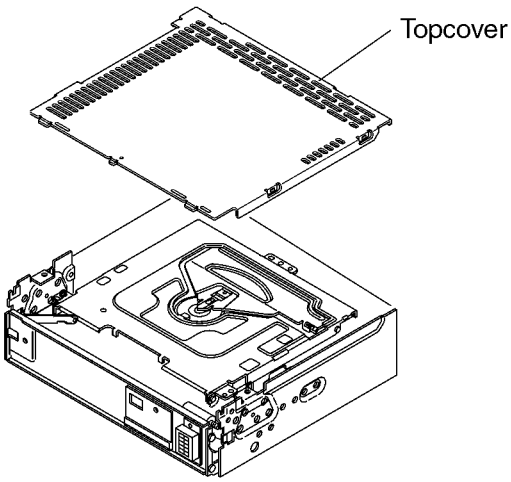

4. Remove the 3 screws(★) and take off the CD deck.

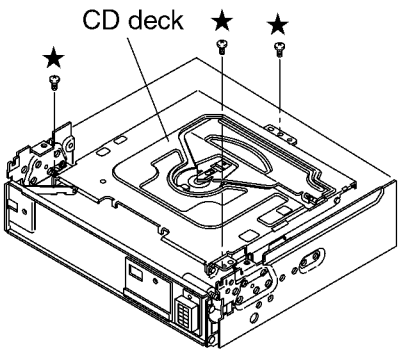

5. Remove the flexible PCB(AP2) from the CN901 (E-6998a).

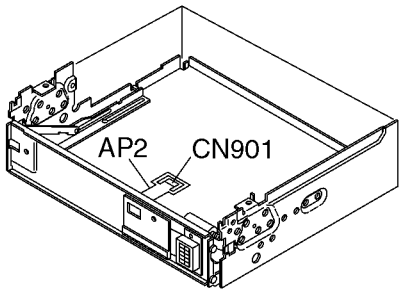

6. Remove the screw(◎) from the Drive Mechanism Ass'y and remove the flexible PCB case.

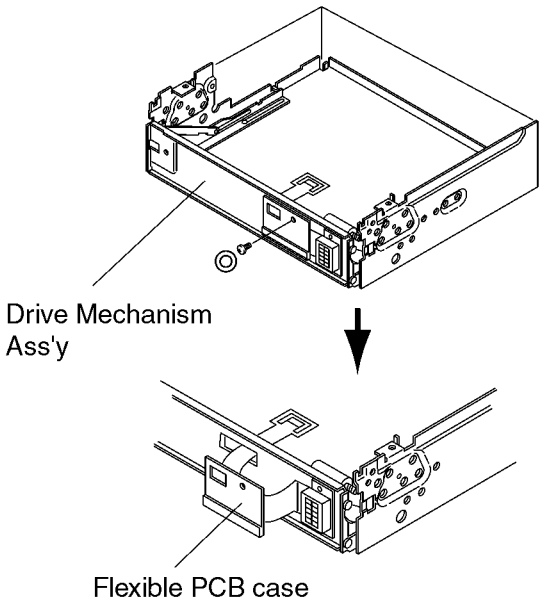

7. Remove the flexible PCB(AP2) from the CN1.

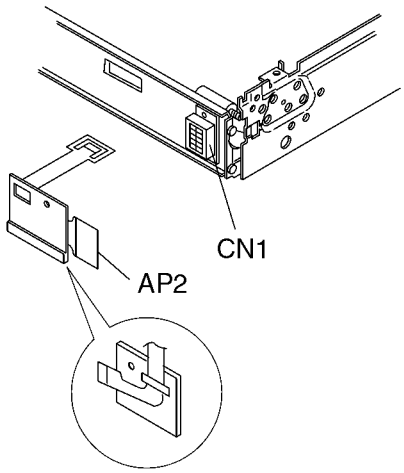

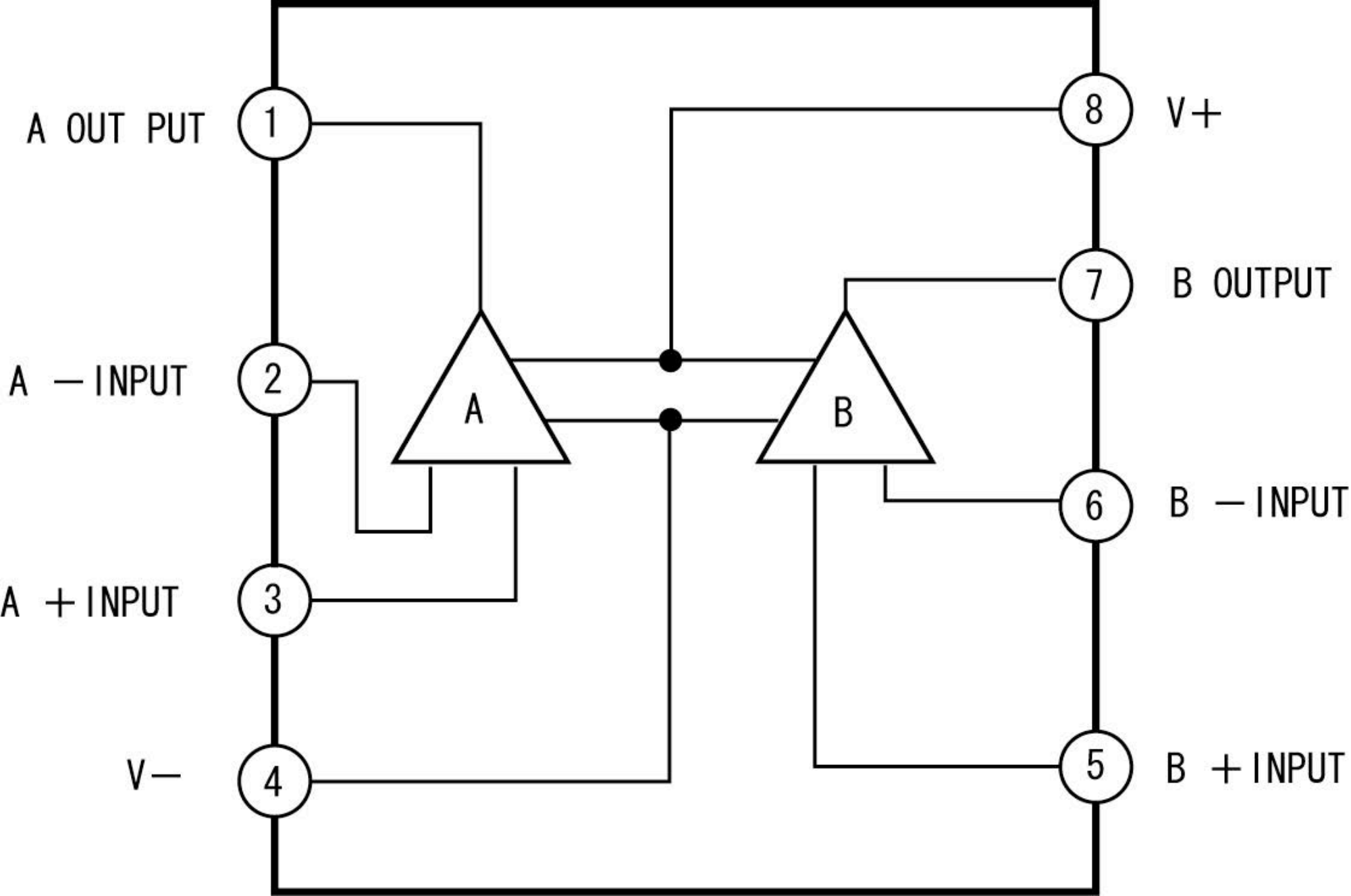
A OUT PUT
1
A －INPUT
2
A ＋INPUT
3
V－
4
8
V＋
7
B OUTPUT
6
B －INPUT
5
B ＋INPUT
A
B

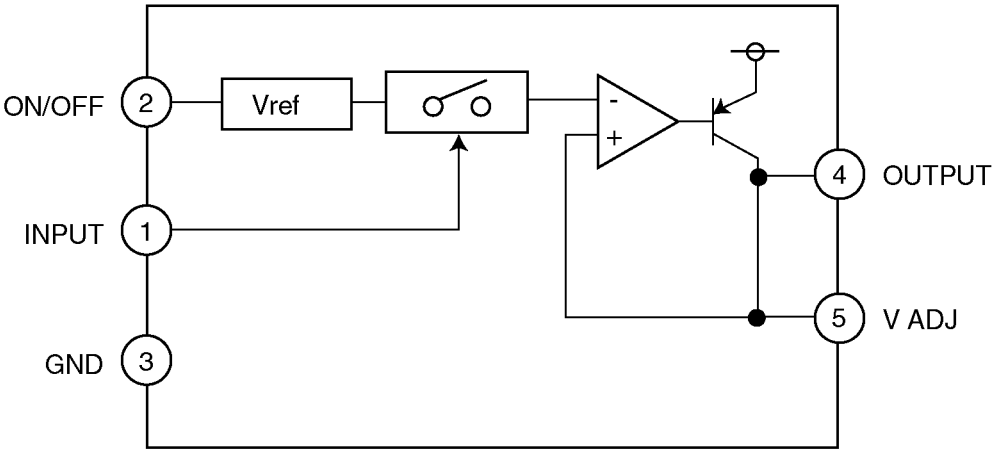
ON/OFF
2
Vref
INPUT
1
GND
3
-
+
4
OUTPUT
5
V ADJ

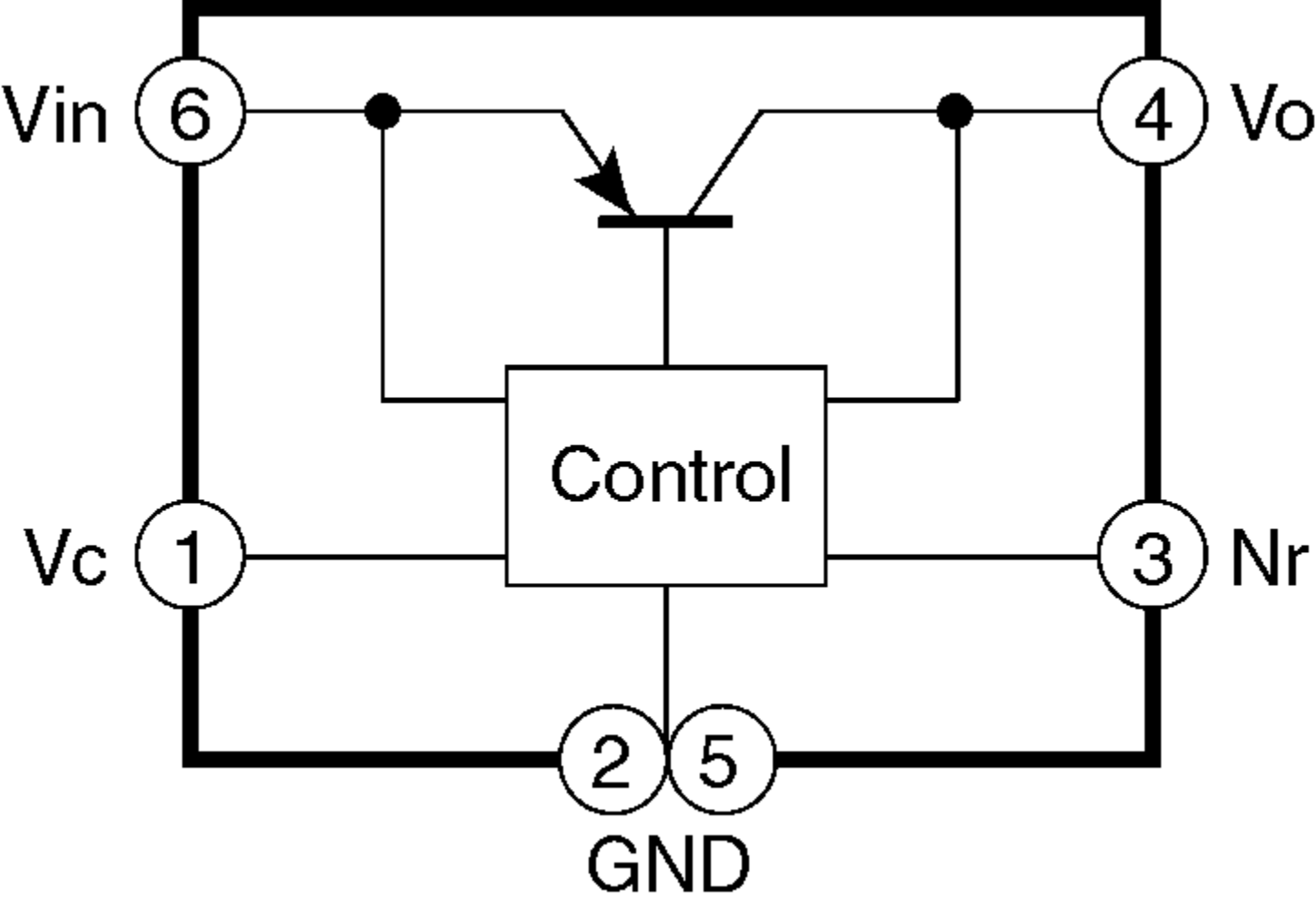
Vin
6
4
Vo
Control
Vc
1
3
Nr
2
5
GND

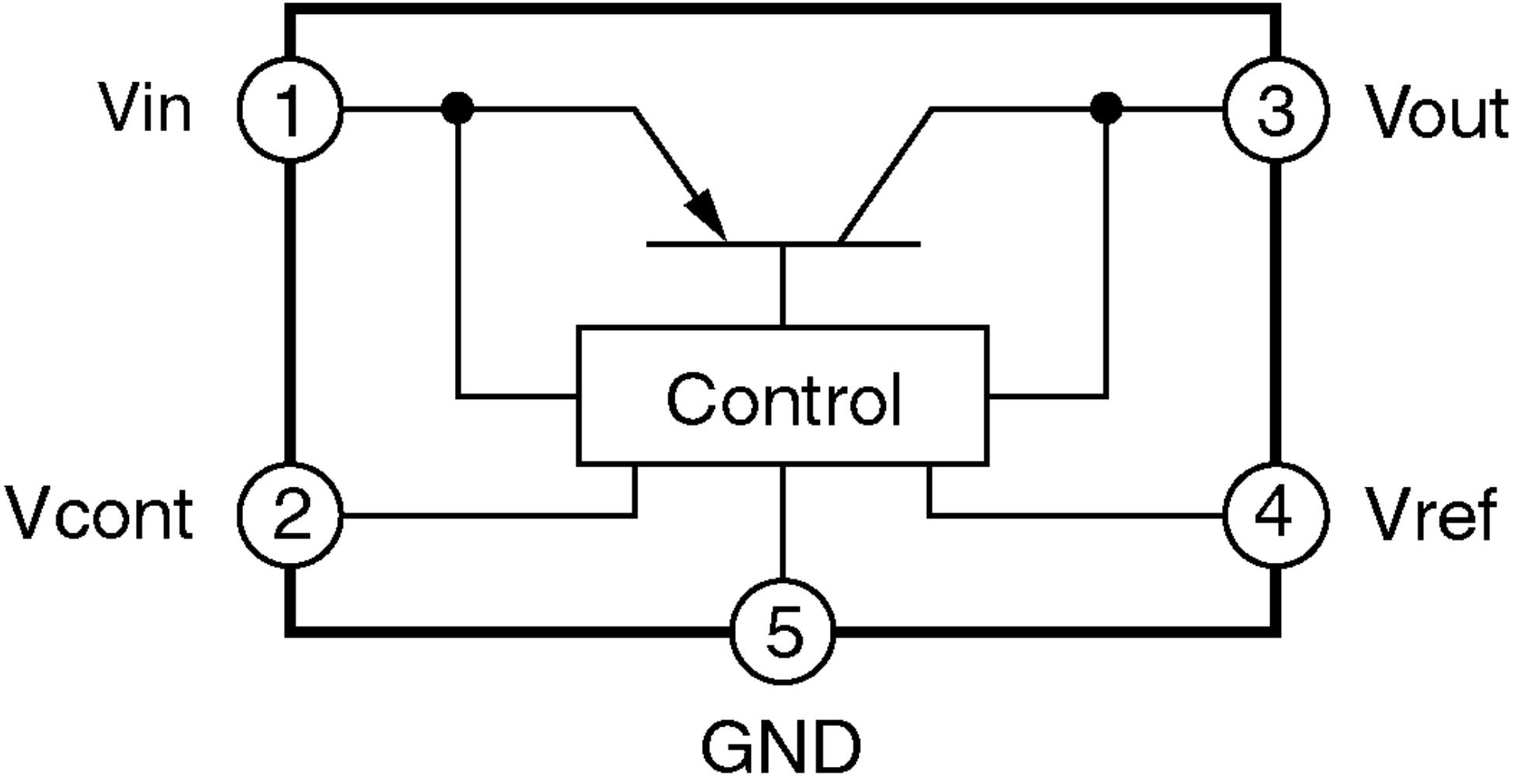
Vin
1
3
Vout
Control
Vcont
2
4
Vref
5
GND

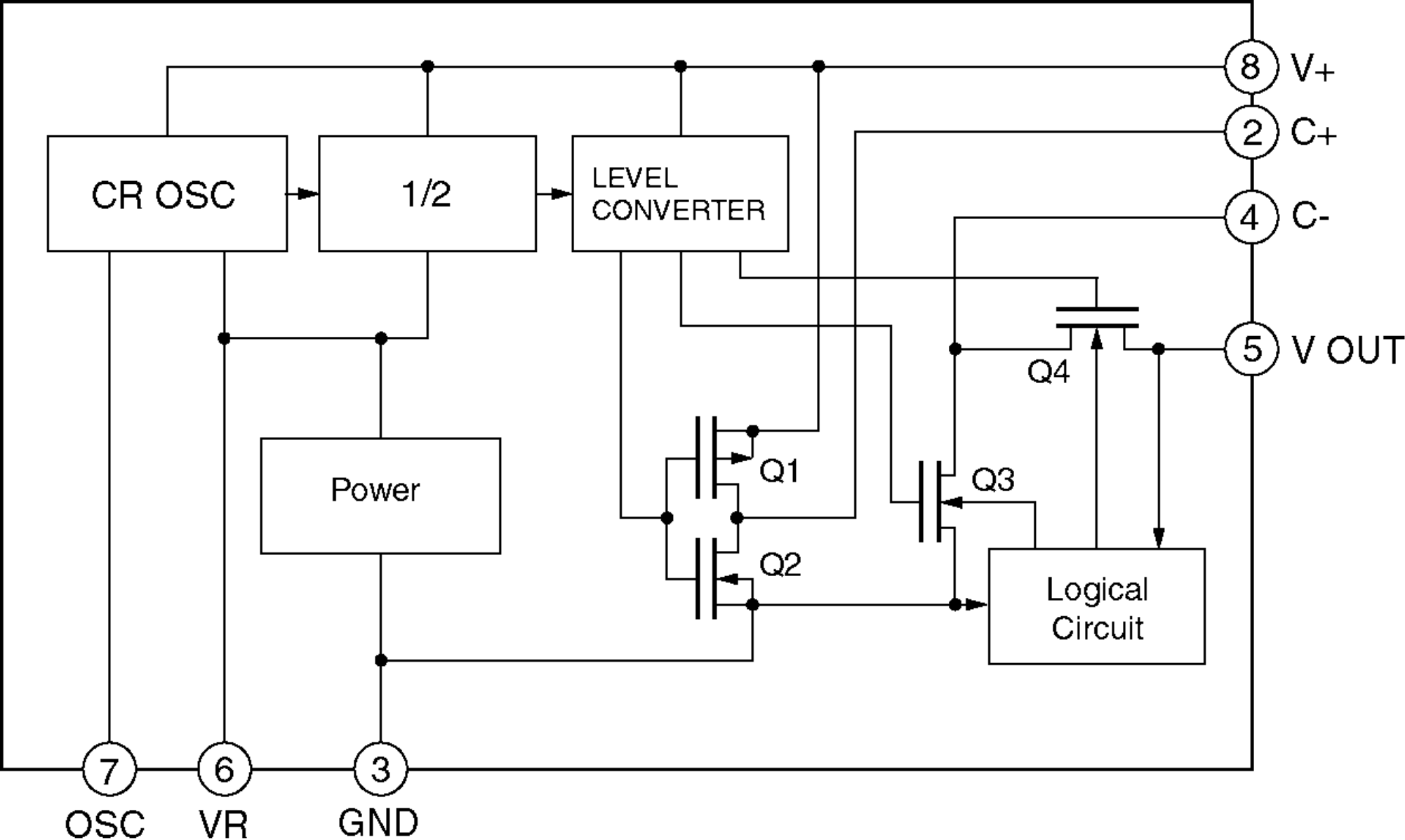
CR OSC
1/2
LEVEL CONVERTER
Power
Q1
Q2
Q3
Q4
Logical Circuit
8
V+
2
C+
4
C-
5
V OUT
7
OSC
6
VR
3
GND

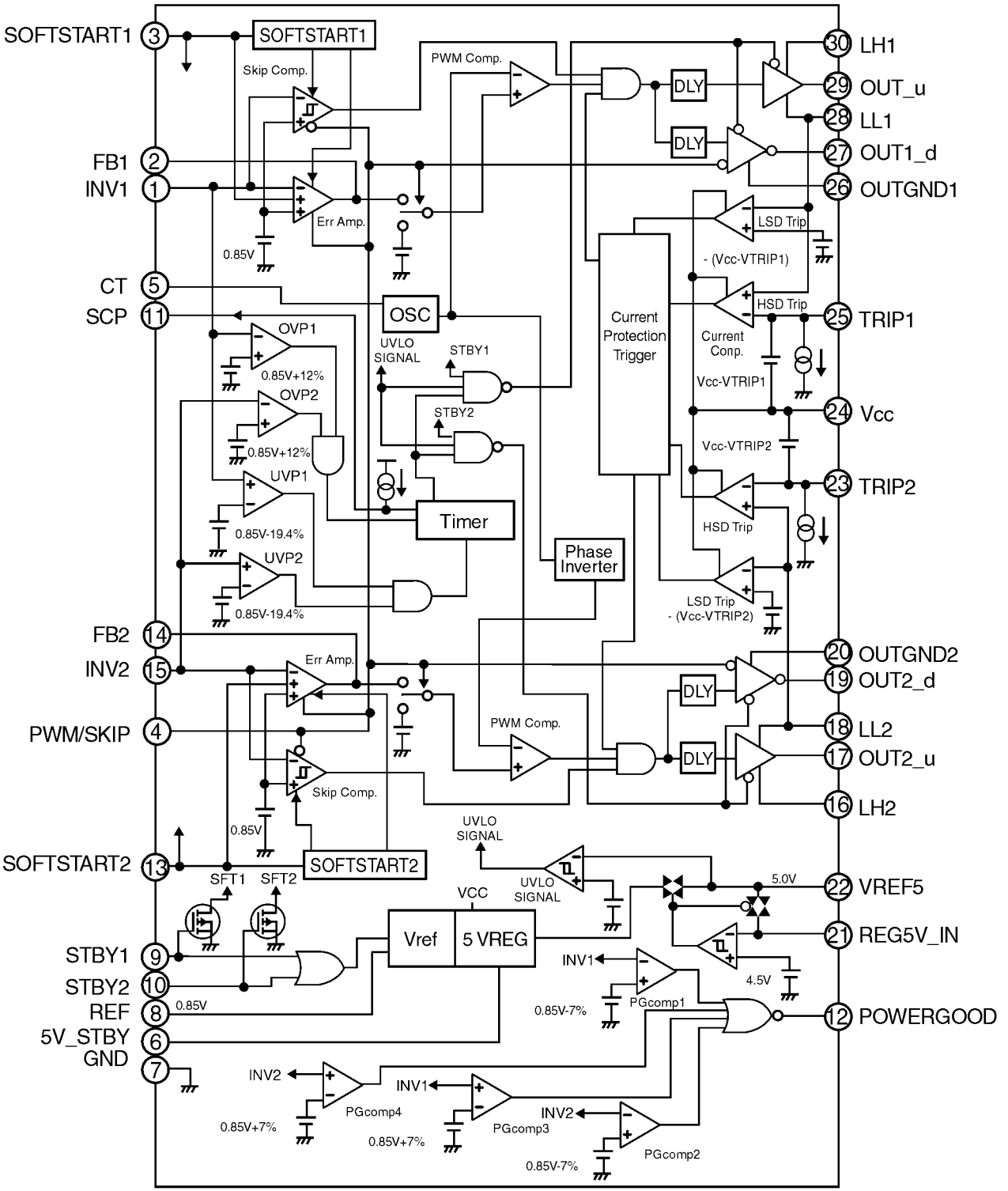
SOFTSTART1
3
SOFTSTART1
Skip Comp.
PWM Comp.
DLY
DLY
30
LH1
29
OUT_u
28
LL1
27
OUT1_d
26
OUTGND1
FB1
2
INV1
1
Err Amp.
0.85V
LSD Trip
- (Vcc-VTRIP1)
CT
5
SCP
11
OSC
HSD Trip
25
TRIP1
Current Protection Trigger
Current Conp.
OVP1
UVLO SIGNAL
STBY1
0.85V+12%
Vcc-VTRIP1
OVP2
STBY2
24
Vcc
0.85V+12%
Vcc-VTRIP2
UVP1
23
TRIP2
Timer
HSD Trip
0.85V-19.4%
UVP2
Phase Inverter
LSD Trip
- (Vcc-VTRIP2)
0.85V-19.4%
FB2
14
INV2
15
Err Amp.
20
OUTGND2
19
OUT2_d
DLY
PWM/SKIP
4
PWM Comp.
18
LL2
DLY
17
OUT2_u
Skip Comp.
16
LH2
0.85V
UVLO SIGNAL
SOFTSTART2
13
SOFTSTART2
SFT1
SFT2
UVLO SIGNAL
5.0V
22
VREF5
VCC
Vref
5 VREG
21
REG5V_IN
STBY1
9
STBY2
10
INV1
4.5V
REF
8
0.85V
0.85V-7%
PGcomp1
12
POWERGOOD
5V_STBY
6
GND
7
INV2
INV1
PGcomp4
INV2
PGcomp3
0.85V+7%
0.85V+7%
PGcomp2
0.85V-7%

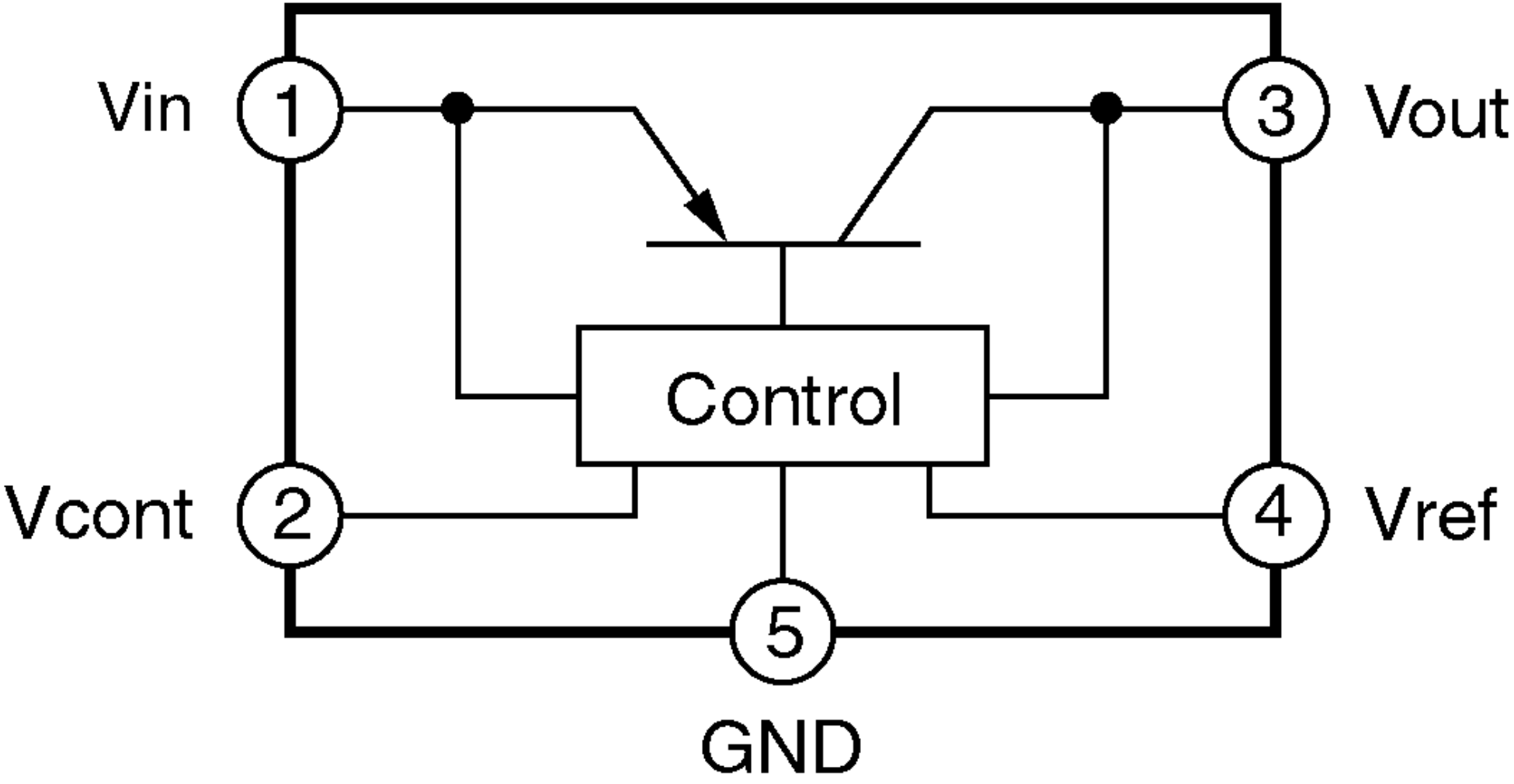
Vin
1
3
Vout
Control
Vcont
2
4
Vref
5
GND

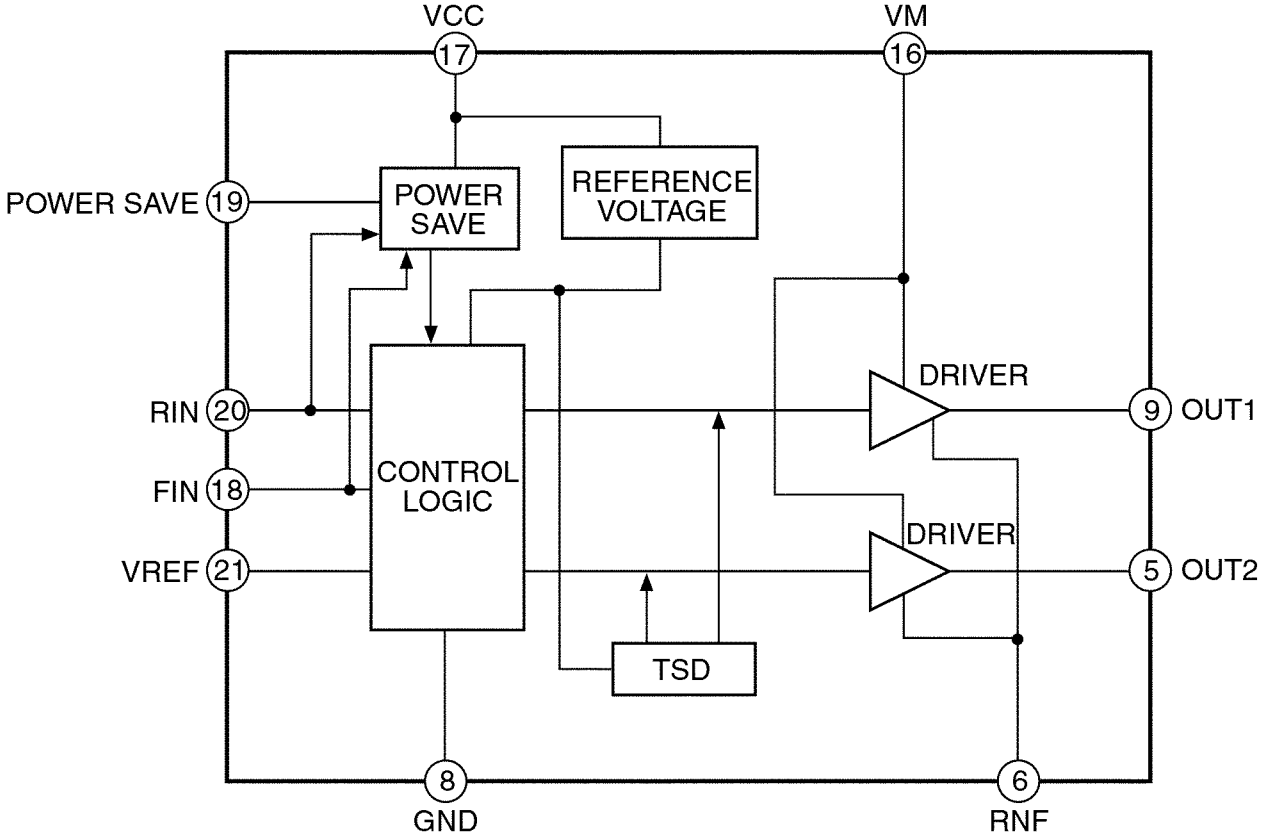
VCC
17
VM
16
POWER SAVE
19
POWER SAVE
REFERENCE VOLTAGE
RIN
20
FIN
18
VREF
21
CONTROL LOGIC
DRIVER
DRIVER
9
OUT1
5
OUT2
TSD
8
GND
6
RNF

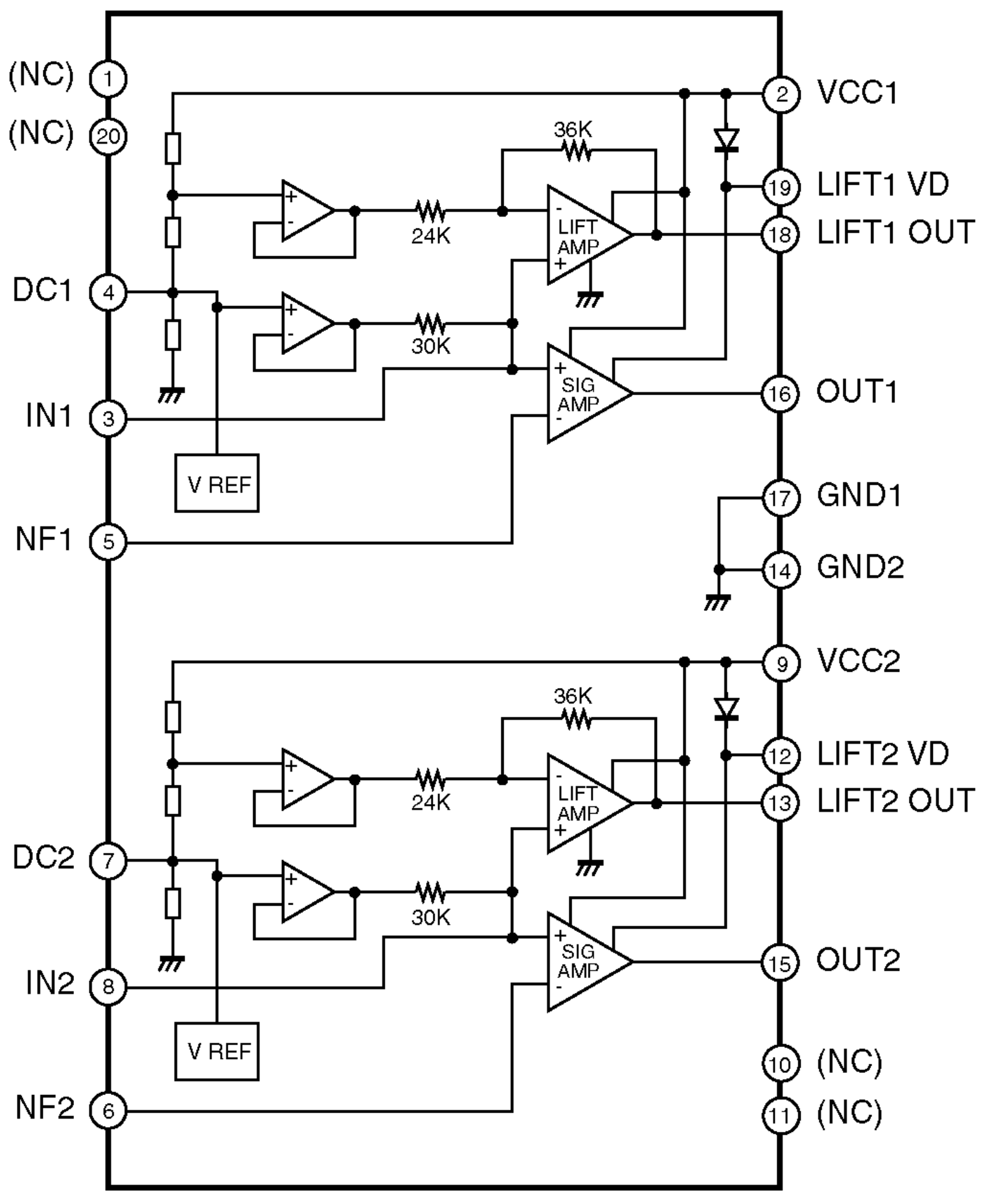
(NC) 1
(NC) 20
DC1 4
IN1 3
NF1 5
DC2 7
IN2 8
NF2 6
2 VCC1
19 LIFT1 VD
18 LIFT1 OUT
16 OUT1
17 GND1
14 GND2
9 VCC2
12 LIFT2 VD
13 LIFT2 OUT
15 OUT2
10 (NC)
11 (NC)
36K
24K
30K
LIFT AMP
SIG AMP
V REF
36K
24K
30K
LIFT AMP
SIG AMP
V REF

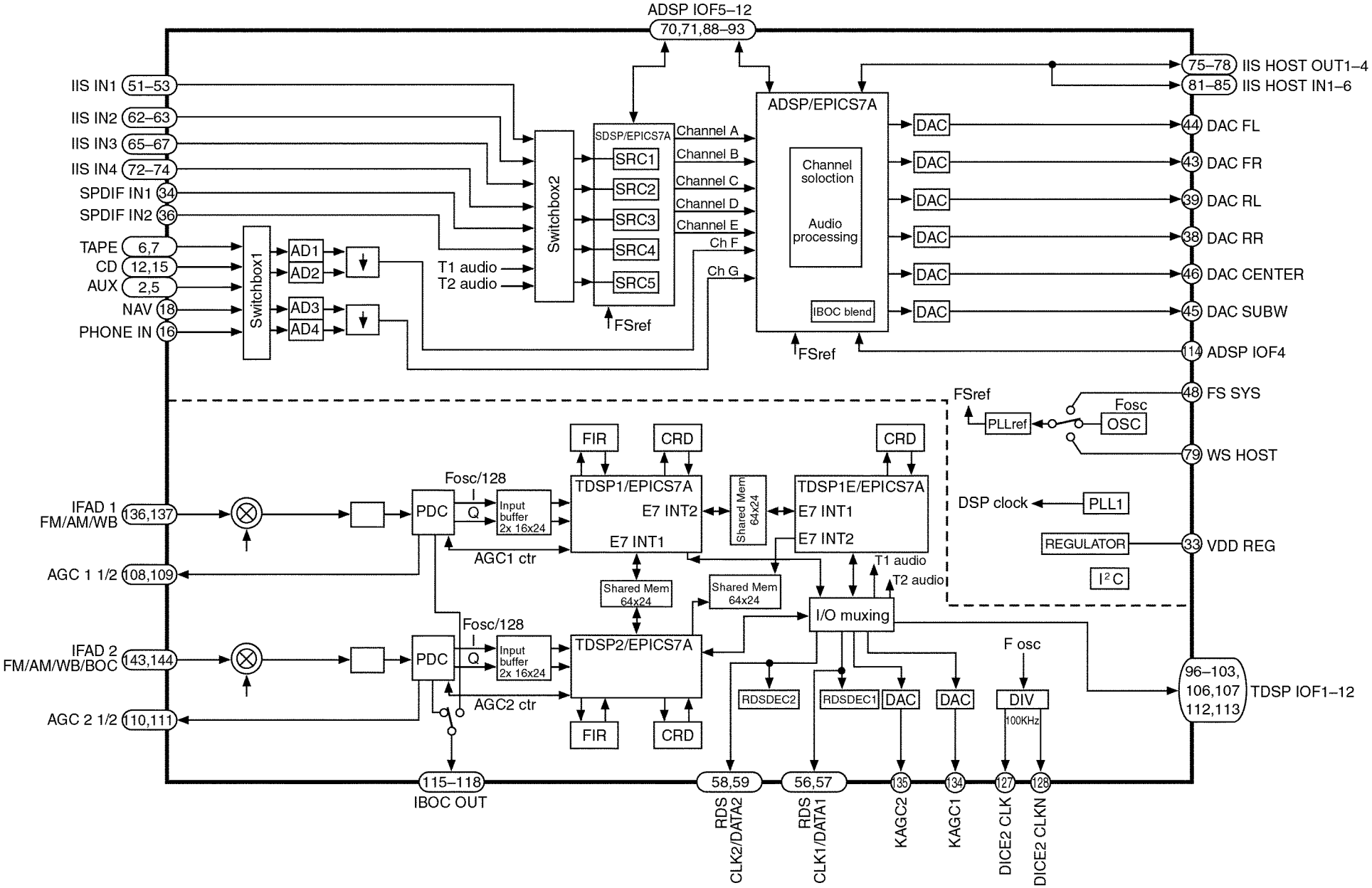
ADSP IOF5–12
70,71,88–93
IIS IN1 51–53
IIS IN2 62–63
IIS IN3 65–67
IIS IN4 72–74
SPDIF IN1 34
SPDIF IN2 36
TAPE 6,7
CD 12,15
AUX 2,5
NAV 18
PHONE IN 16
Switchbox1
AD1
AD2
AD3
AD4
T1 audio
T2 audio
Switchbox2
SDSP/EPICS7A
SRC1
SRC2
SRC3
SRC4
SRC5
FSref
Channel A
Channel B
Channel C
Channel D
Channel E
Ch F
Ch G
ADSP/EPICS7A
Channel soloction
Audio processing
IBOC blend
DAC
75–78 IIS HOST OUT1–4
81–85 IIS HOST IN1–6
44 DAC FL
43 DAC FR
39 DAC RL
38 DAC RR
46 DAC CENTER
45 DAC SUBW
114 ADSP IOF4
48 FS SYS
79 WS HOST
33 VDD REG
FSref
PLLref
Fosc
OSC
DSP clock
PLL1
REGULATOR
I²C
IFAD 1 FM/AM/WB 136,137
AGC 1 1/2 108,109
IFAD 2 FM/AM/WB/BOC 143,144
AGC 2 1/2 110,111
PDC
Fosc/128
I
Q
Input buffer 2x 16x24
AGC1 ctr
AGC2 ctr
FIR
CRD
TDSP1/EPICS7A
E7 INT2
E7 INT1
Shared Mem 64x24
TDSP1E/EPICS7A
E7 INT1
E7 INT2
T1 audio
T2 audio
I/O muxing
TDSP2/EPICS7A
RDSDEC2
RDSDEC1
DAC
DAC
F osc
DIV
100KHz
96–103, 106,107 112,113 TDSP IOF1–12
115–118
IBOC OUT
58,59
RDS CLK2/DATA2
56,57
RDS CLK1/DATA1
135
KAGC2
134
KAGC1
127
DICE2 CLK
128
DICE2 CLKN

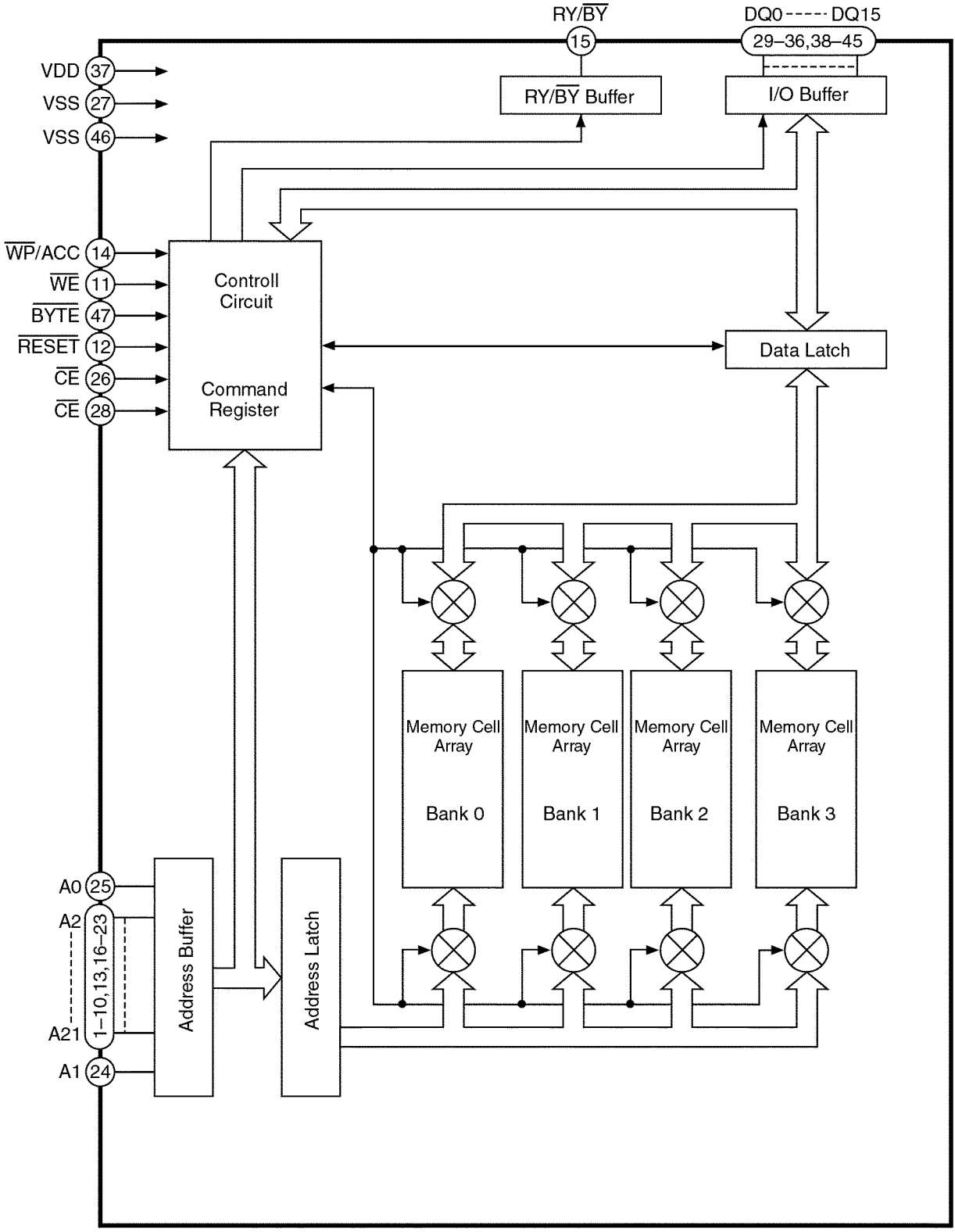
RY/BY
15
DQ0 ----- DQ15
29–36,38–45
VDD 37
VSS 27
VSS 46
RY/BY Buffer
I/O Buffer
WP/ACC 14
WE 11
BYTE 47
RESET 12
CE 26
CE 28
Controll Circuit
Command Register
Data Latch
Memory Cell Array
Bank 0
Memory Cell Array
Bank 1
Memory Cell Array
Bank 2
Memory Cell Array
Bank 3
A0 25
A2
A21
1–10,13,16–23
A1 24
Address Buffer
Address Latch

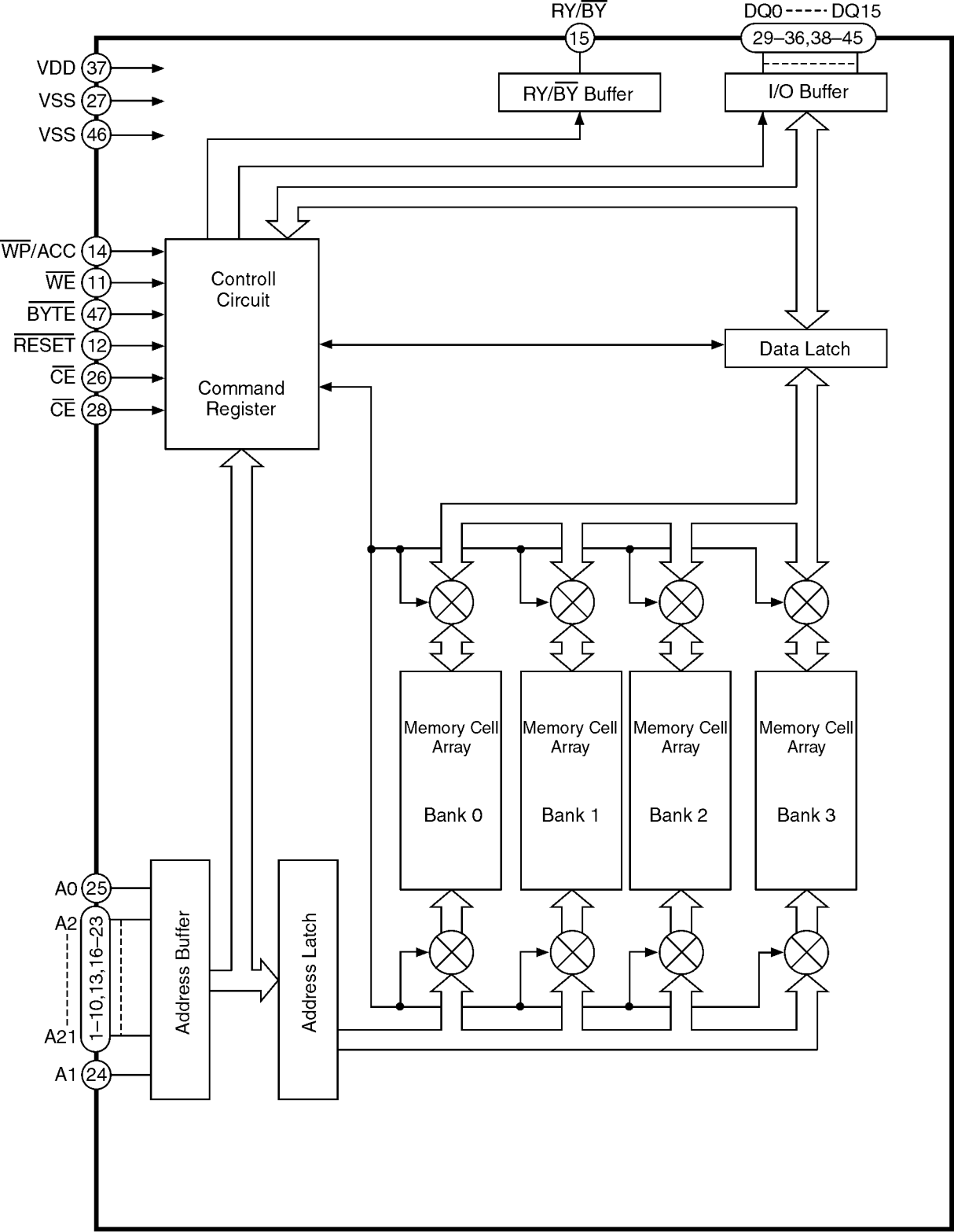
RY/BY
15
DQ0 ----- DQ15
29–36,38–45
VDD 37
VSS 27
VSS 46
RY/BY Buffer
I/O Buffer
WP/ACC 14
WE 11
BYTE 47
RESET 12
CE 26
CE 28
Controll Circuit
Command Register
Data Latch
Memory Cell Array
Bank 0
Memory Cell Array
Bank 1
Memory Cell Array
Bank 2
Memory Cell Array
Bank 3
A0 25
A2
A21
1–10,13,16–23
A1 24
Address Buffer
Address Latch

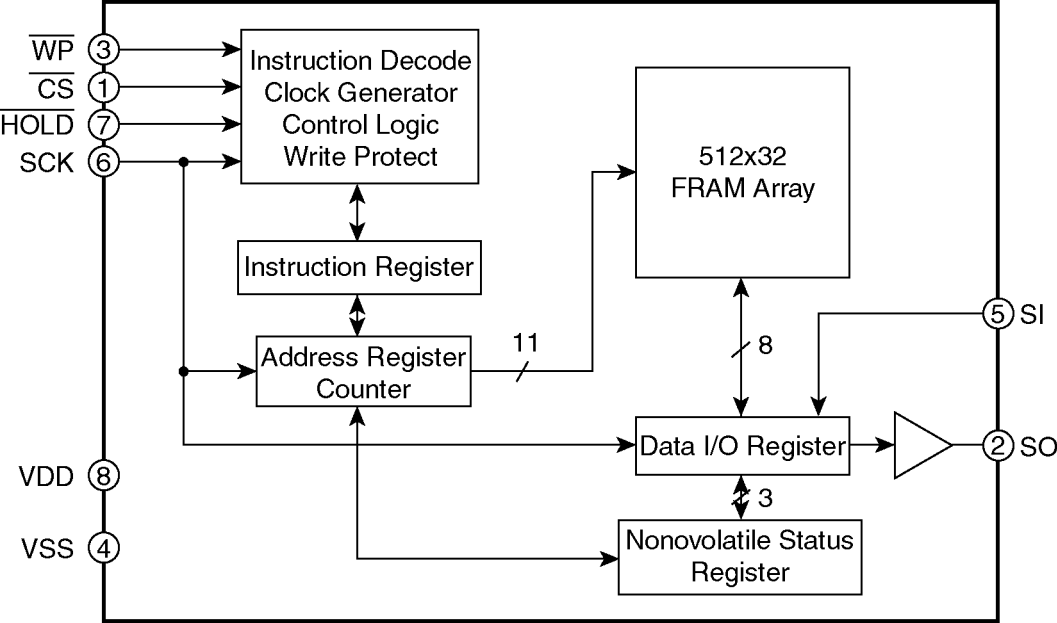
WP
3
CS
1
HOLD
7
SCK
6
Instruction Decode
Clock Generator
Control Logic
Write Protect
512x32
FRAM Array
Instruction Register
Address Register
Counter
11
8
5
SI
Data I/O Register
2
SO
3
VDD
8
VSS
4
Nonovolatile Status
Register

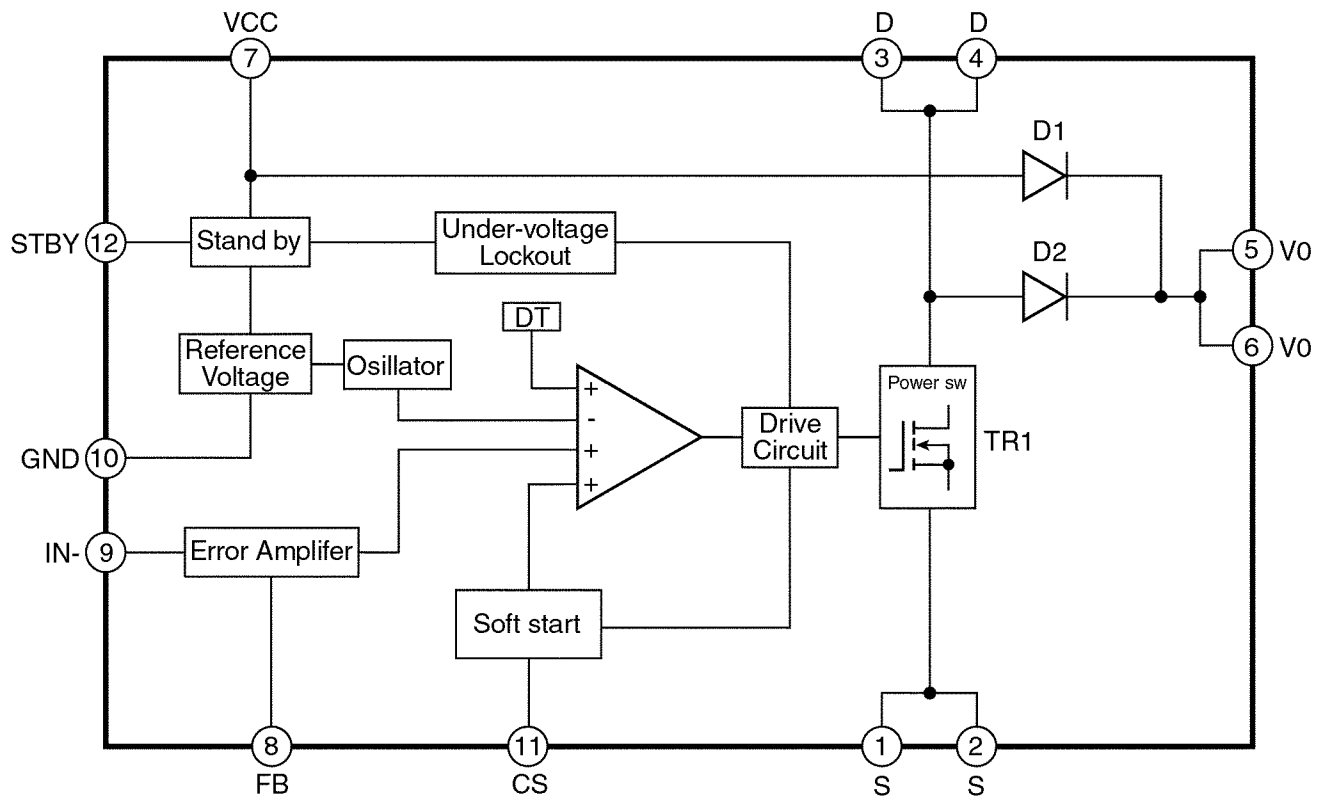
VCC
7
D
3
D
4
D1
D2
STBY
12
Stand by
Under-voltage
Lockout
5
V0
6
V0
DT
Reference
Voltage
Osillator
Power sw
Drive
Circuit
TR1
GND
10
IN-
9
Error Amplifer
Soft start
8
FB
11
CS
1
S
2
S

Features / Model	CQ-C9800N	CQ-C9700N
Maximum Power Output	70W	50W

178mm
155mm
50mm
Panasonic
MP3/WMA
VOLUME
MUTE
AF
BAND
FOLDER
TILT OPEN

(CQ-C9800N)

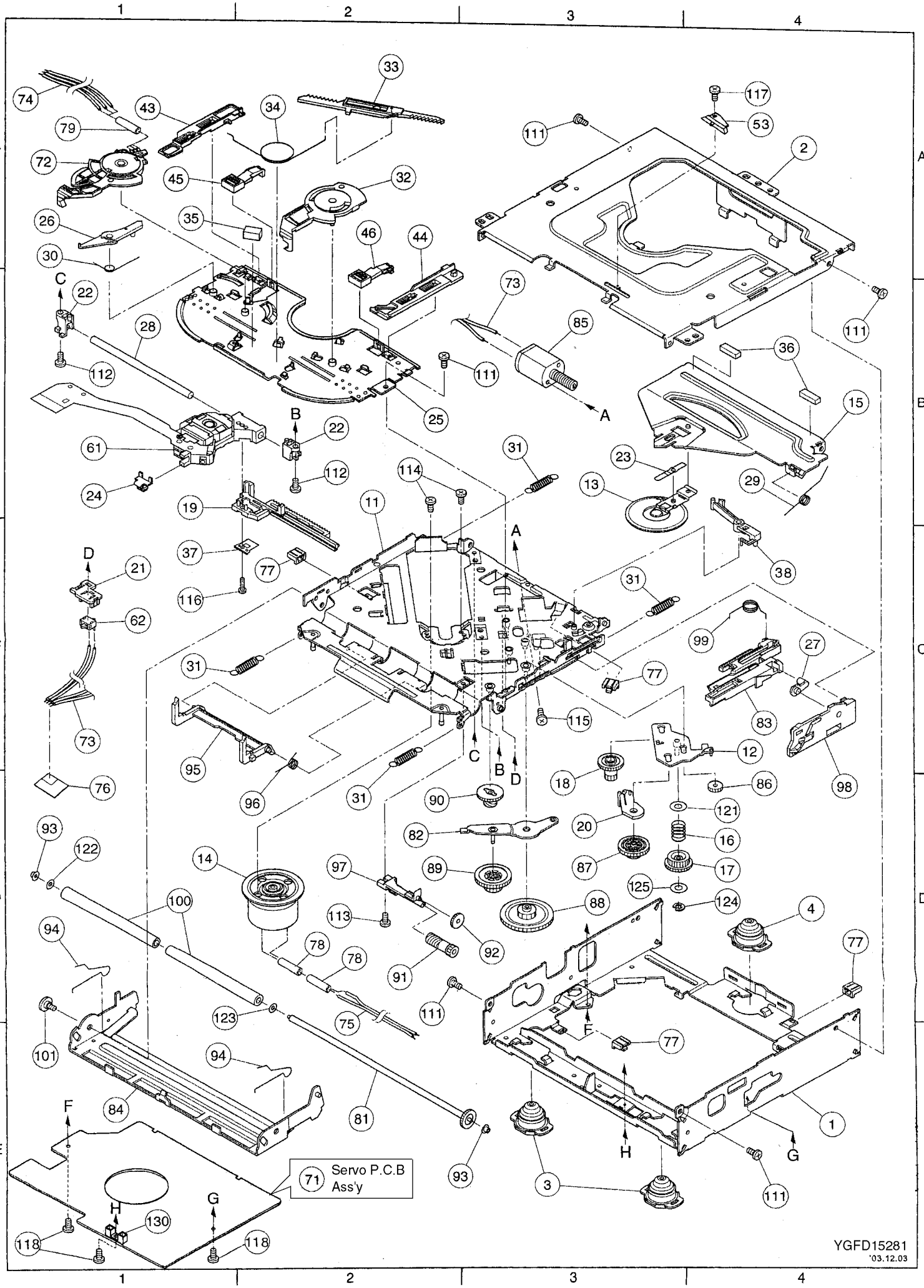
Servo P.C.B Ass'y
YGFD15281
'03.12.03

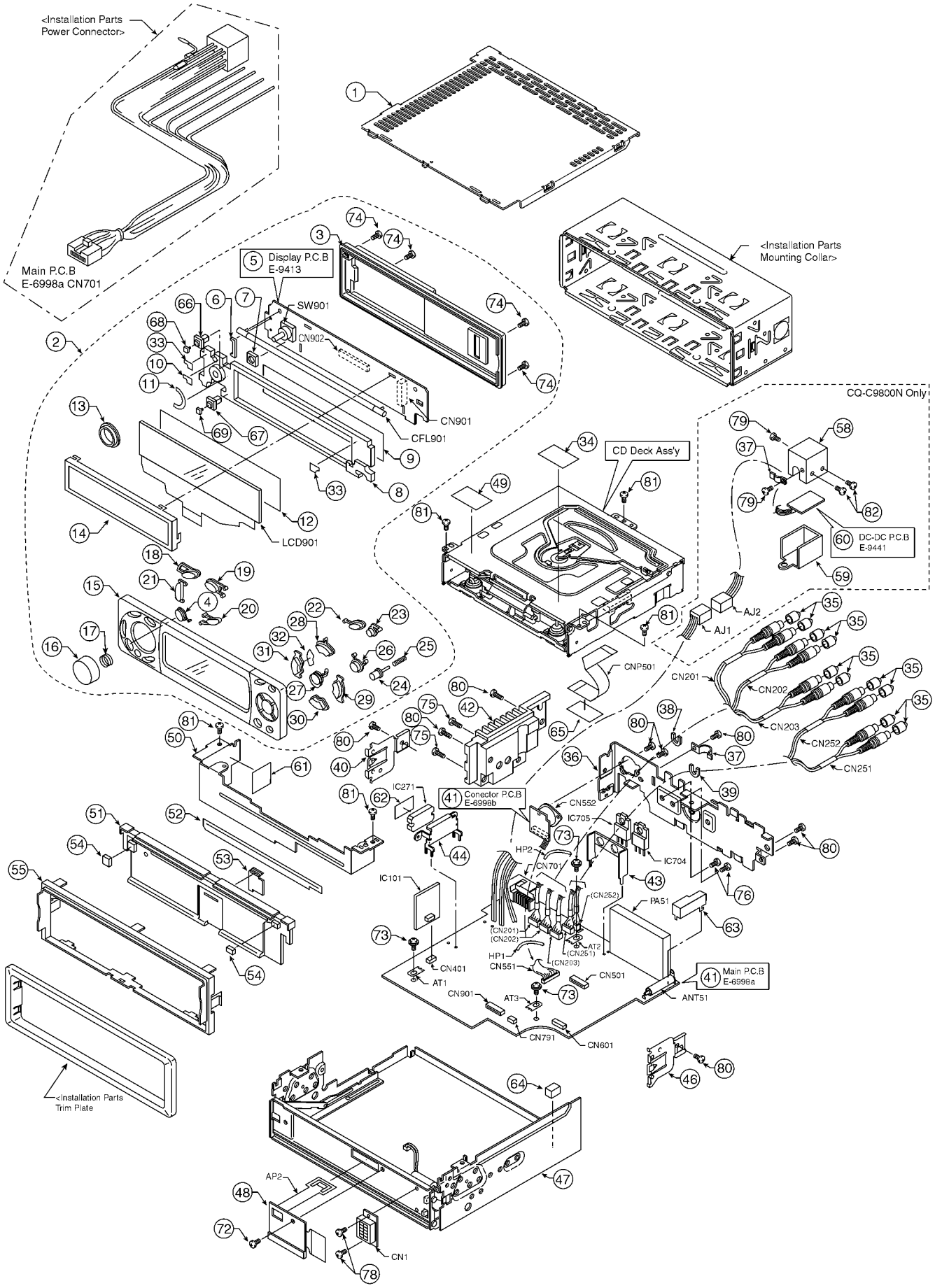
<Installation Parts Power Connector>
Main P.C.B E-6998a CN701
5 Display P.C.B E-9413
SW901
CN902
CN901
CFL901
LCD901
<Installation Parts Mounting Collar>
CD Deck Ass'y
CQ-C9800N Only
60 DC-DC P.C.B E-9441
AJ1
AJ2
CNP501
CN201
CN202
CN203
CN252
CN251
41 Conector P.C.B E-6998b
CN552
IC705
IC704
IC271
IC101
HP2
CN701
HP1
CN551
CN401
AT1
AT2
AT3
CN501
41 Main P.C.B E-6998a
ANT51
PA51
CN791
CN601
<Installation Parts Trim Plate
AP2
CN1
CQ-C9800N/C9700N

CAUTION:

This product utilizes a laser diode with the unit turned "on", laser radiation is emitted from the pickup lens.

Laser radiation from the pickup lens is safety level, but be sure the followings:

1. Do not disassemble the optical pickup unit, since radiation from exposed laser diode is dangerous.
2. Do not adjust the variable resistor on the pickup unit. It was already adjusted.
3. Do not look at the focus lens using optical instruments.
4. Recommend not to look at pickup lens for a long time.

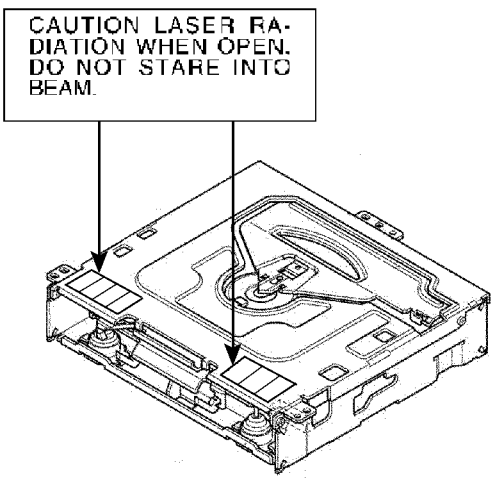

Deck Ass'y (Upper Side)

Caution

This Product utilizes a laser.

Use of controls or adjustments or performance of procedures other than those specified herein may result in hazardous radiation exposure.

ModelPicture

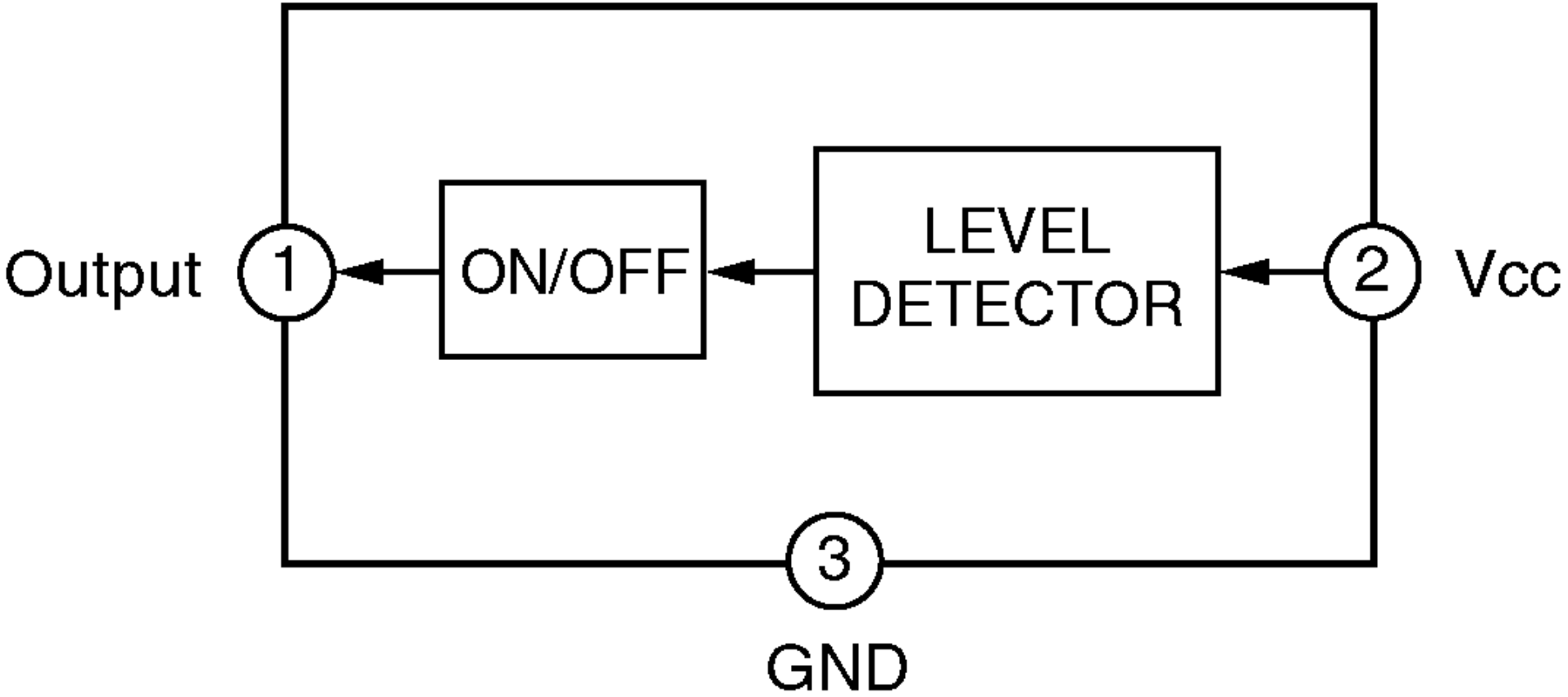
Output
1
ON/OFF
LEVEL
DETECTOR
2
Vcc
3
GND

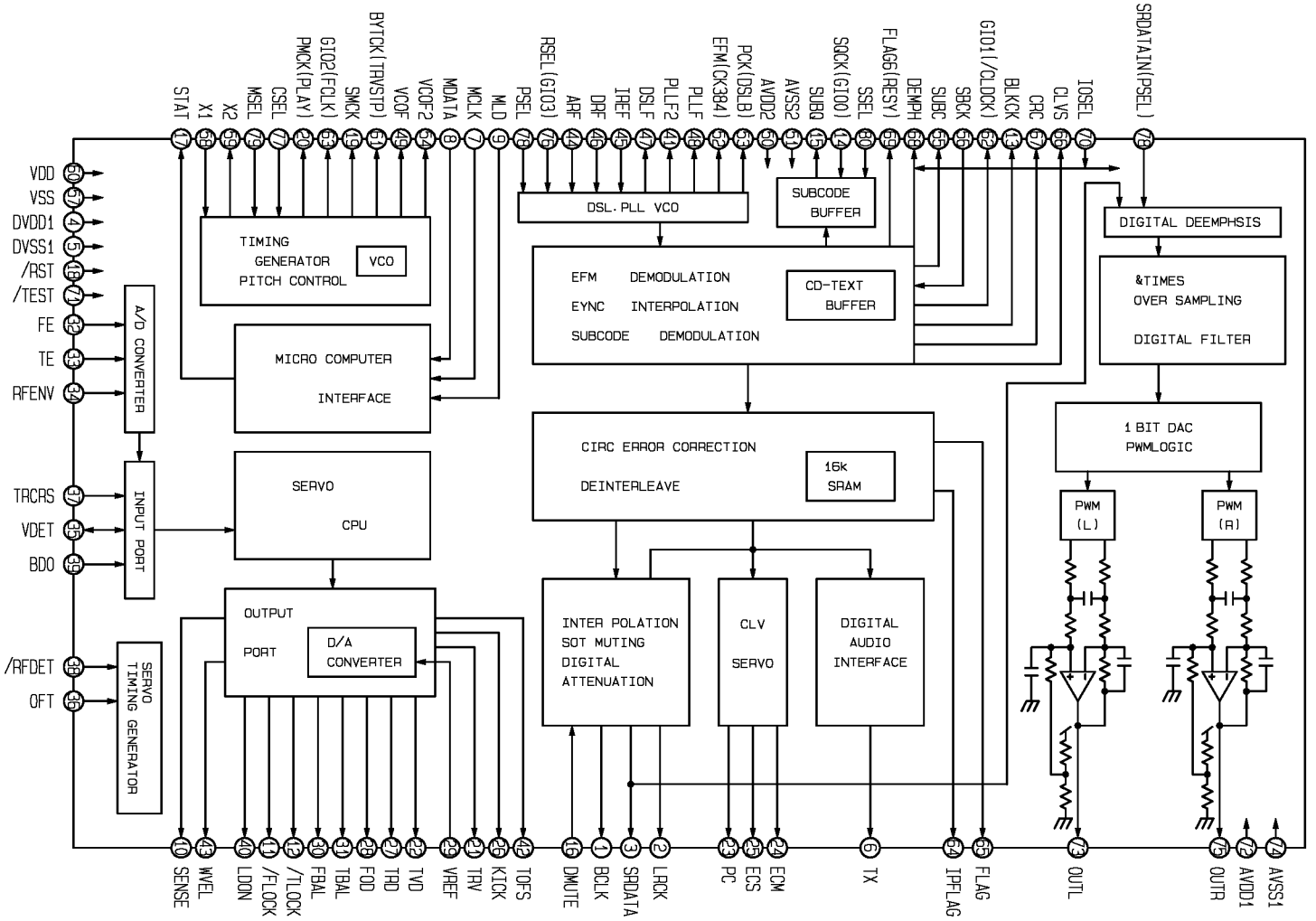
STAT 77
X1 28
X2 29
MSEL 78
CSEL 77
PMCK(PLAY) 20
GIO2(FCLK) 21
SMCK 19
BYTCK(TRVSTP) 31
VCOF 45
VCOF2 44
MDATA 8
MCLK 7
MLD 9
PSEL 78
RSEL(GIO3) 76
ARF 14
DRF 46
IREF 45
DSLF 47
PLLF2 41
PLLF 48
EFM(CK384) 42
PCK(DSLB) 43
AVDD2 30
AVSS2 31
SUBQ 15
SQCK(GIO0) 17
SSEL 80
FLAG6(RESY) 59
DEMPH 58
SUBC 55
SBCK 56
BLKCK 13
CRC 57
CLVS 58
IOSEL 10
SRDATAIN(PSEL) 78
VDD 30
VSS 31
DVDD1 4
DVSS1 5
/RST 16
/TEST 17
FE 32
TE 33
RFENV 34
TRCRS 37
VDET 35
BDO 36
/RFDET 38
OFT 39
TIMING GENERATOR PITCH CONTROL
VCO
DSL. PLL VCO
SUBCODE BUFFER
DIGITAL DEEMPHSIS
EFM DEMODULATION
EYNC INTERPOLATION
SUBCODE DEMODULATION
CD-TEXT BUFFER
&TIMES OVER SAMPLING
DIGITAL FILTER
A/D CONVERTER
MICRO COMPUTER
INTERFACE
CIRC ERROR CORRECTION
DEINTERLEAVE
16k SRAM
1 BIT DAC PWMLOGIC
PWM (L)
PWM (R)
INPUT PORT
SERVO
CPU
OUTPUT PORT
D/A CONVERTER
INTER POLATION SOT MUTING DIGITAL ATTENUATION
CLV SERVO
DIGITAL AUDIO INTERFACE
SERVO TIMING GENERATOR
SENSE 10
WVEL 13
LDON 40
/FLOCK 11
/TLOCK 12
FBAL 30
TBAL 31
FOD 28
TRD 27
TVD 22
VREF 26
TRV 23
KICK 25
TOFS 42
DMUTE 16
BCLK 1
SRDATA 3
LRCK 2
PC 23
ECS 25
ECM 24
TX 6
IPFLAG 64
FLAG 65
OUTL 73
OUTR 75
AVDD1 72
AVSS1 74

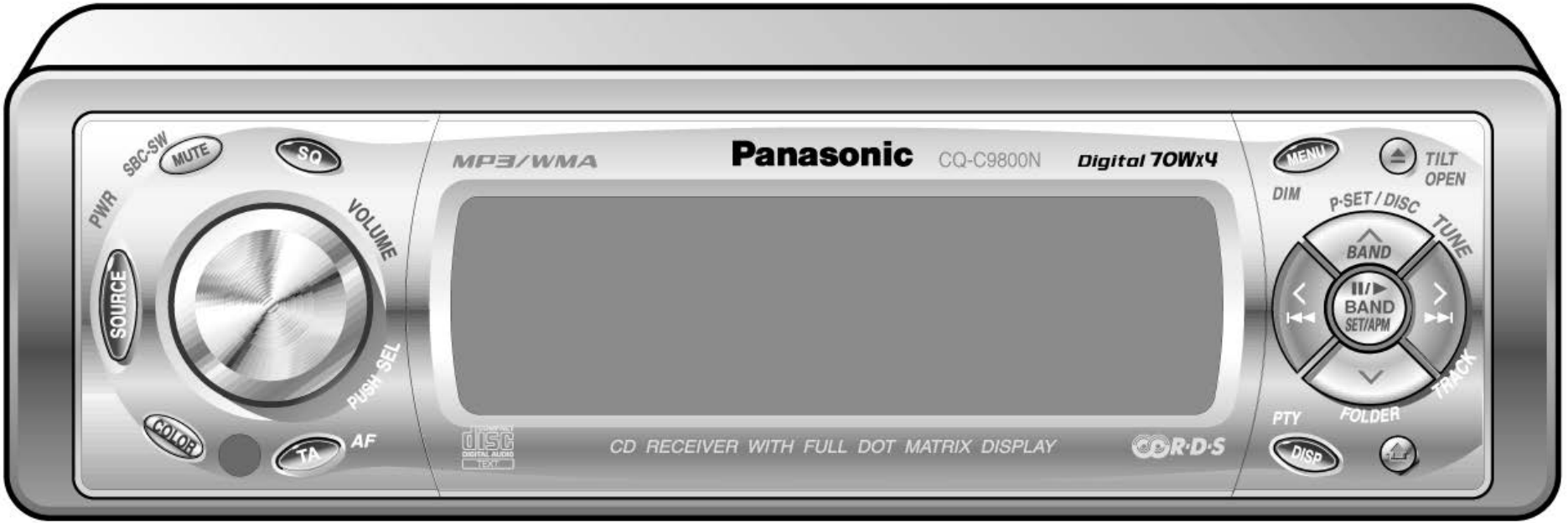
SBC-SW
MUTE
SQ
PWR
VOLUME
SOURCE
PUSH SEL
COLOR
TA
AF
MP3/WMA
Panasonic
CQ-C9800N
Digital 70Wx4
CD RECEIVER WITH FULL DOT MATRIX DISPLAY
R·D·S
MENU
TILT
OPEN
DIM
P·SET / DISC
TUNE
BAND
BAND
SET/APM
TRACK
PTY
FOLDER
DISP

(CQ-C9800N)

19.4. CD Servo Block-1

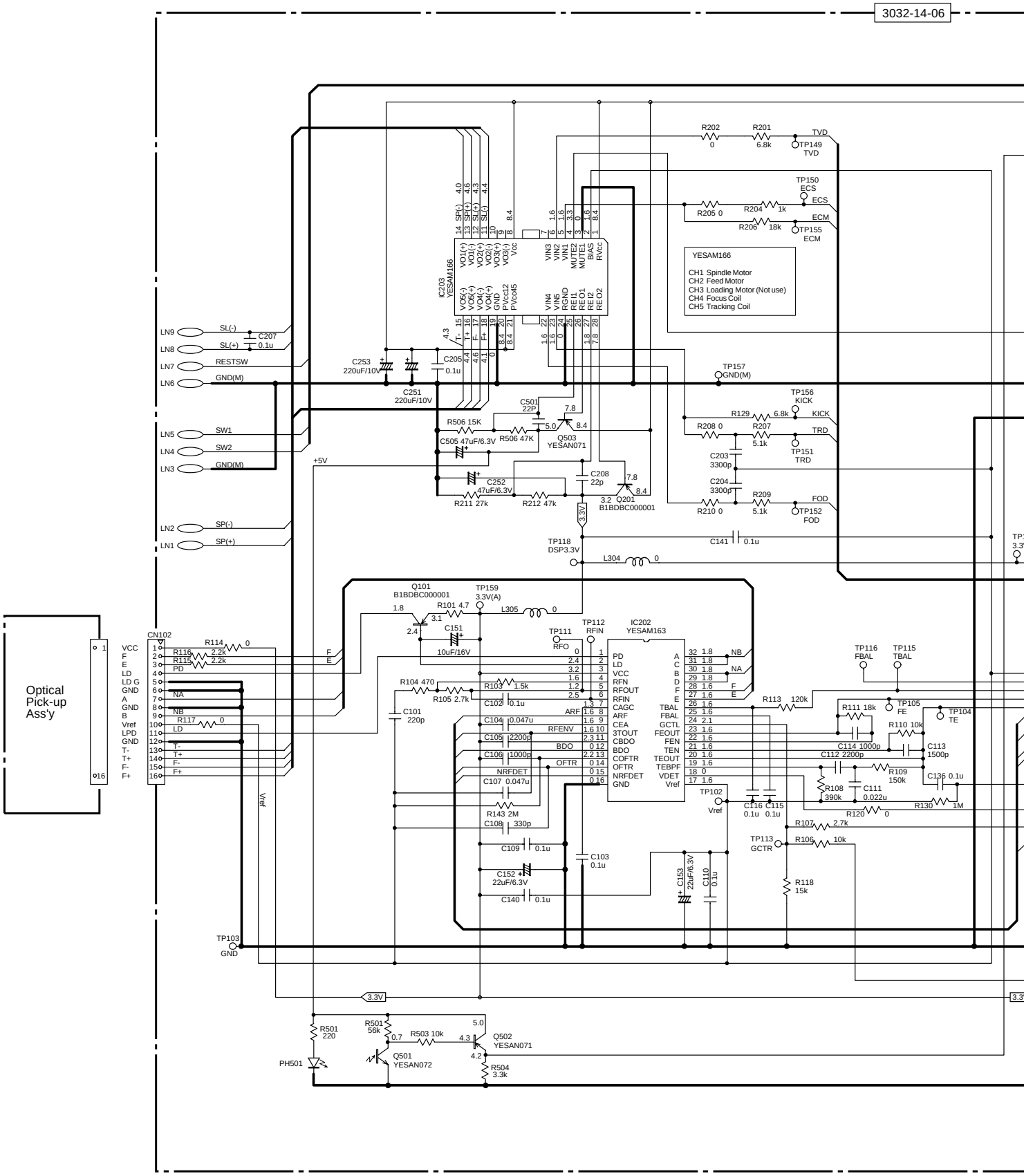

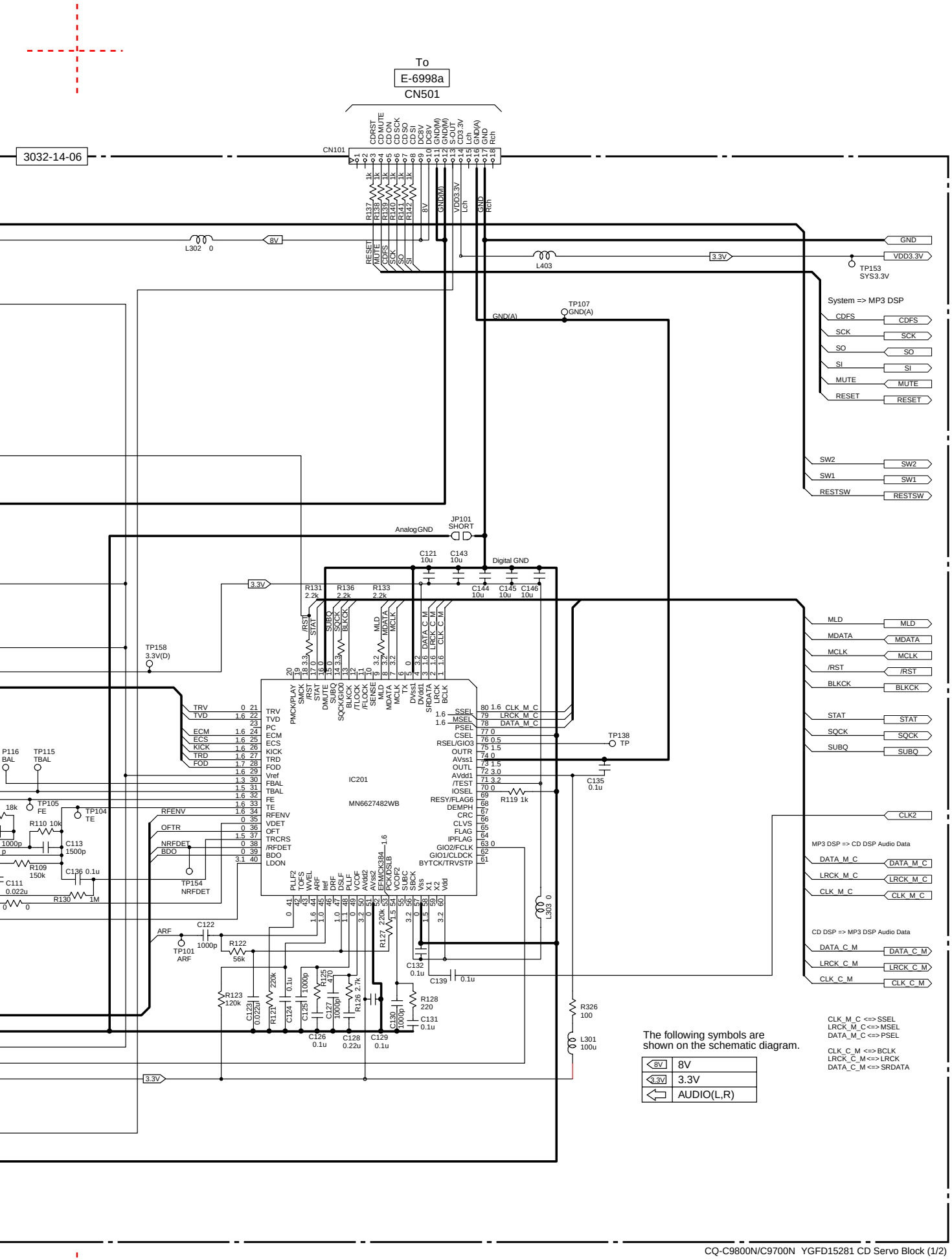

CQ-C9800N/C9700N YGFD15281 CD Servo Block (1/2)

19.5. CD Servo Block-2

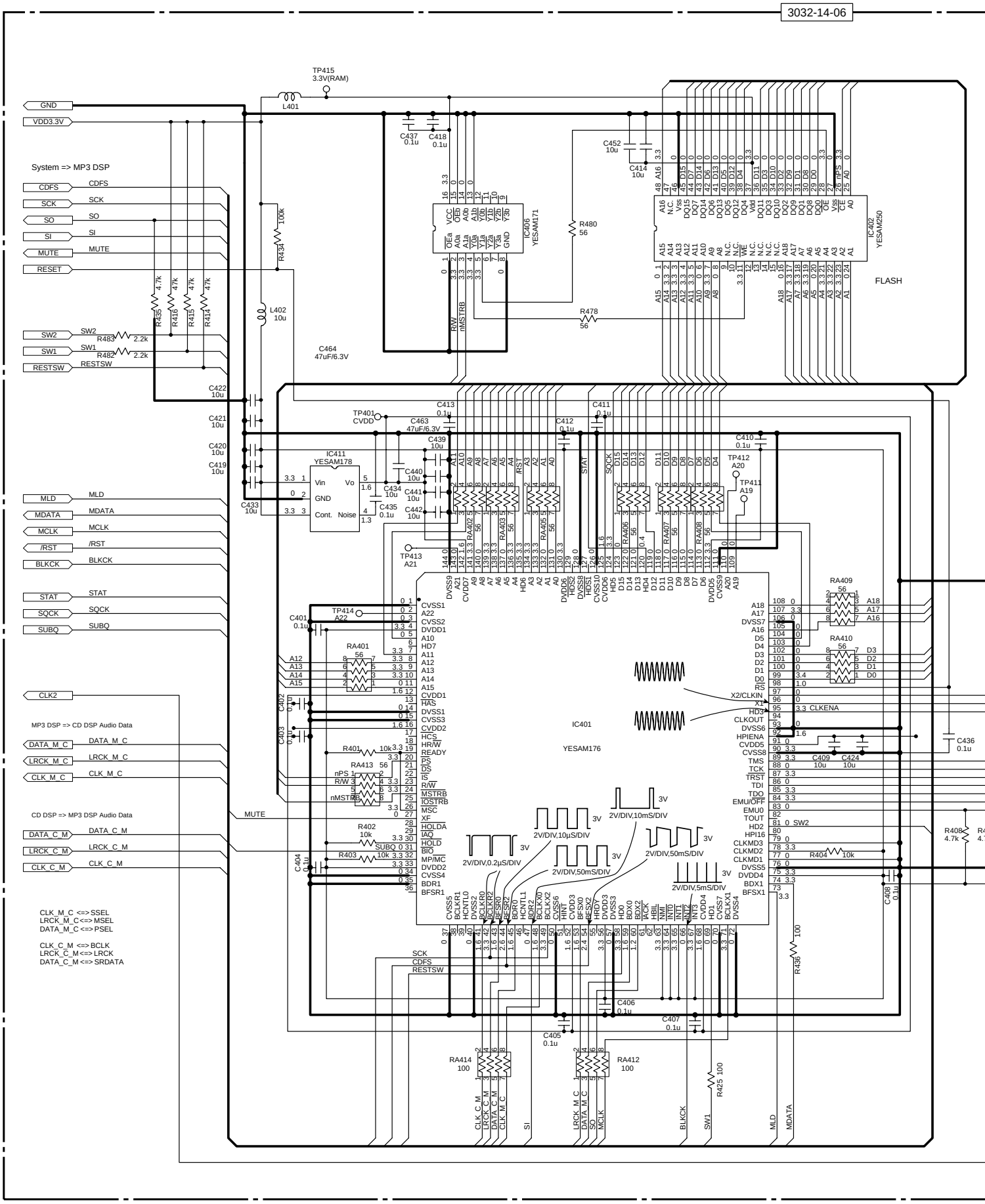

-06

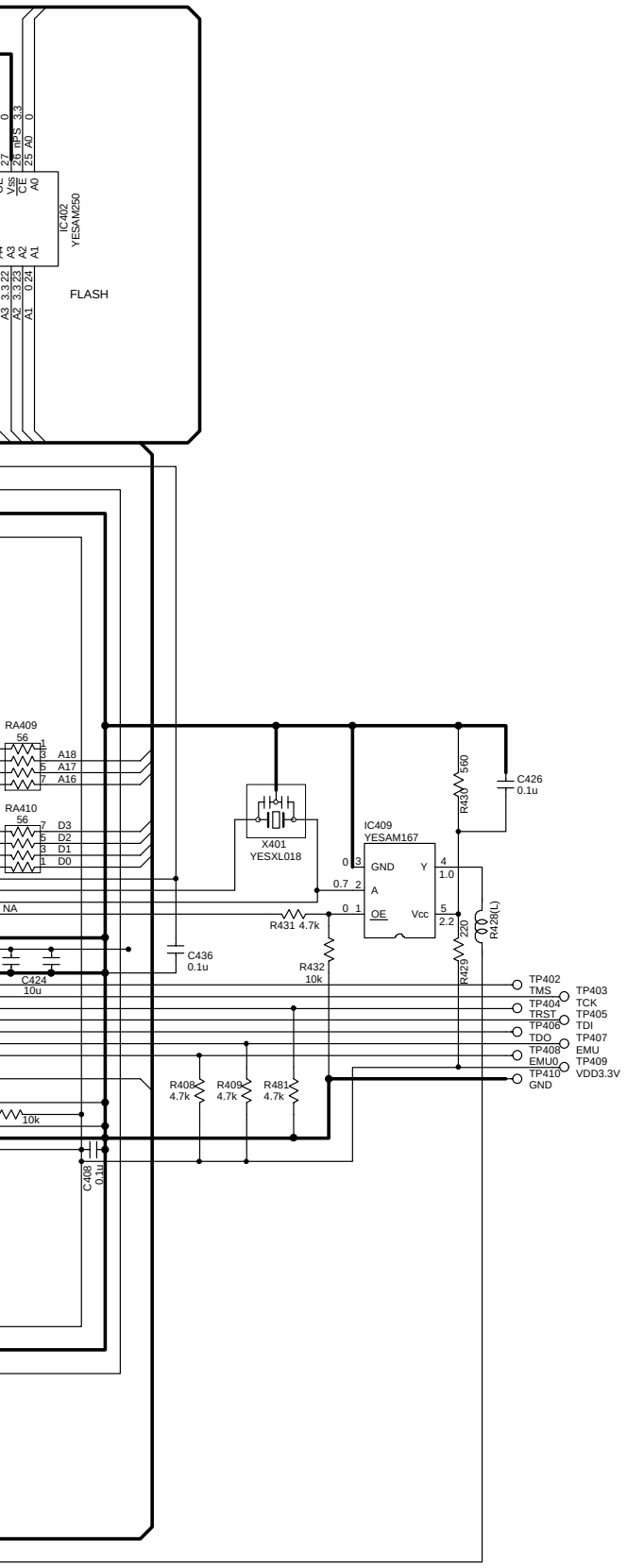
IC402
YESAM250
FLASH
RA409
56
A18
A17
A16
RA410
56
D3
D2
D1
D0
NA
C424
10u
10k
C408
0.1u
X401
YESXL018
IC409
YESAM167
GND
Y
A
OE
Vcc
R431 4.7k
R432
10k
C436
0.1u
R430
560
C426
0.1u
220
R428(L)
R429
R408
4.7k
R409
4.7k
R481
4.7k
TP402
TMS
TP403
TP404
TCK
TRST
TP405
TP406
TDI
TDO
TP407
TP408
EMU
EMU0
TP409
TP410
VDD3.3V
GND

19.3. Display Block

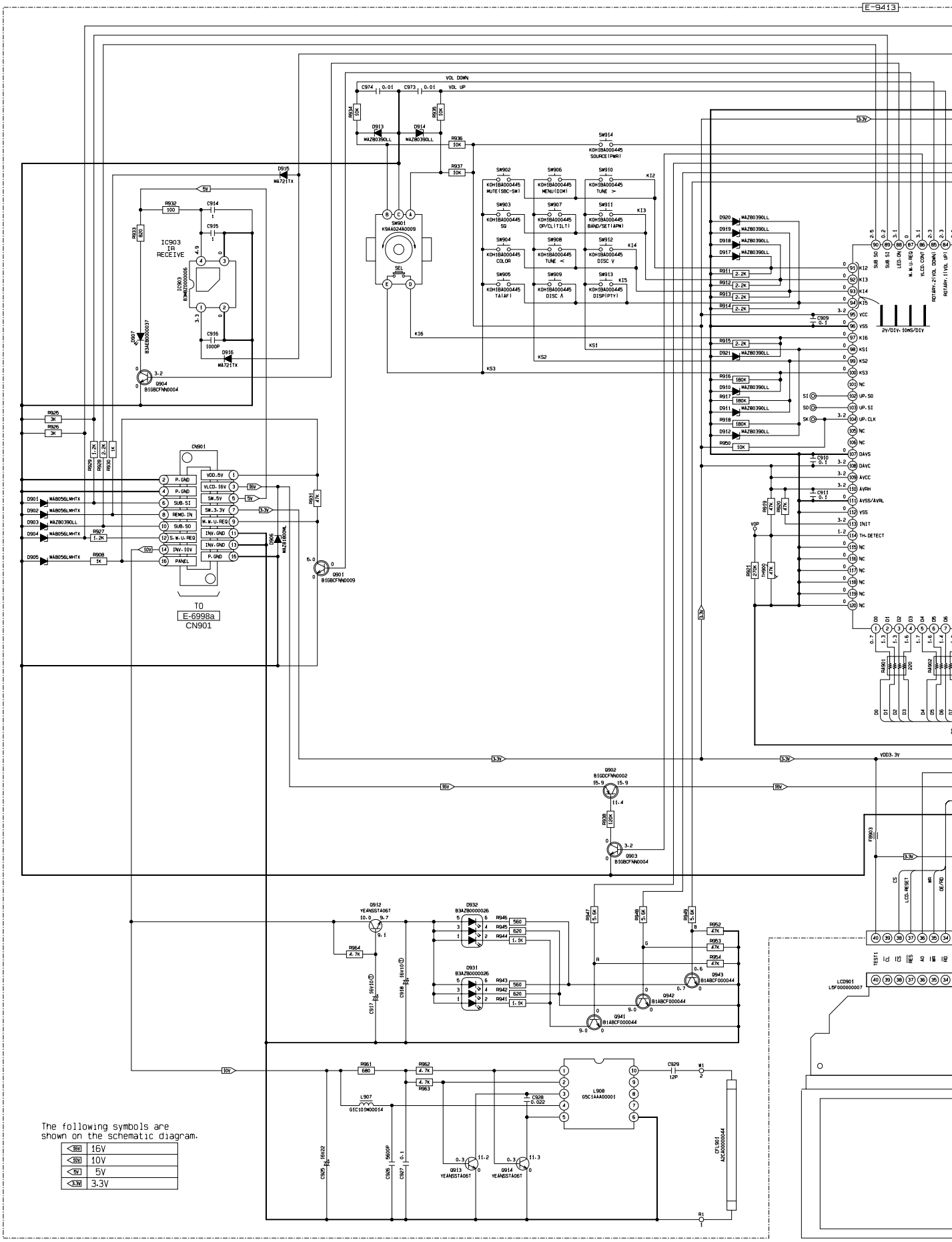

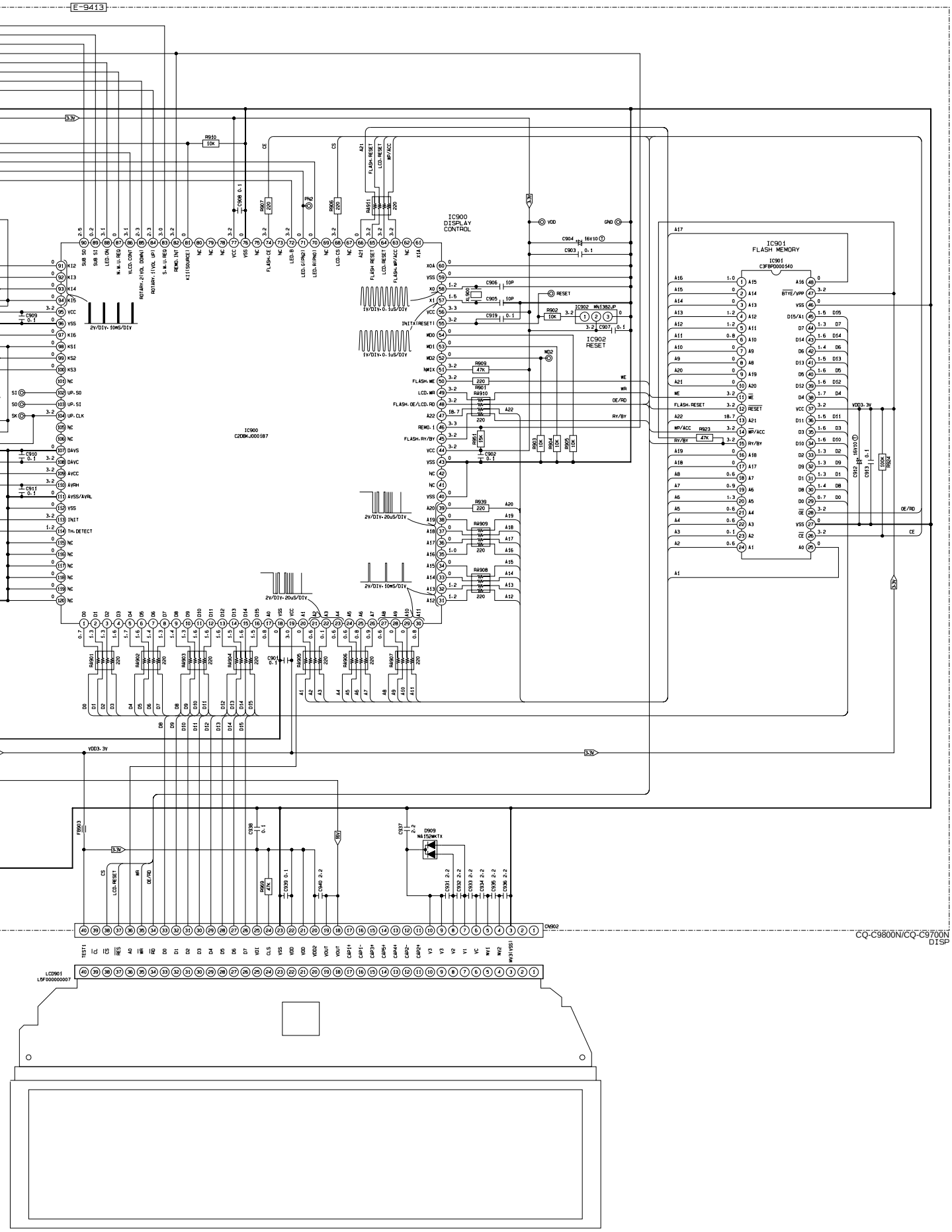
E-9413
IC900
DISPLAY
CONTROL
IC900
C2DBKJ000187
IC901
FLASH MEMORY
IC901
C3FBPD000140
IC902
RESET
IC902
MN1382JP
CN902
LCD901
L5FC000000007
CQ-C9800N/CQ-C9700N
DISP

19 SCHEMATIC DIAGRAM-2

19.1. Main Block-1

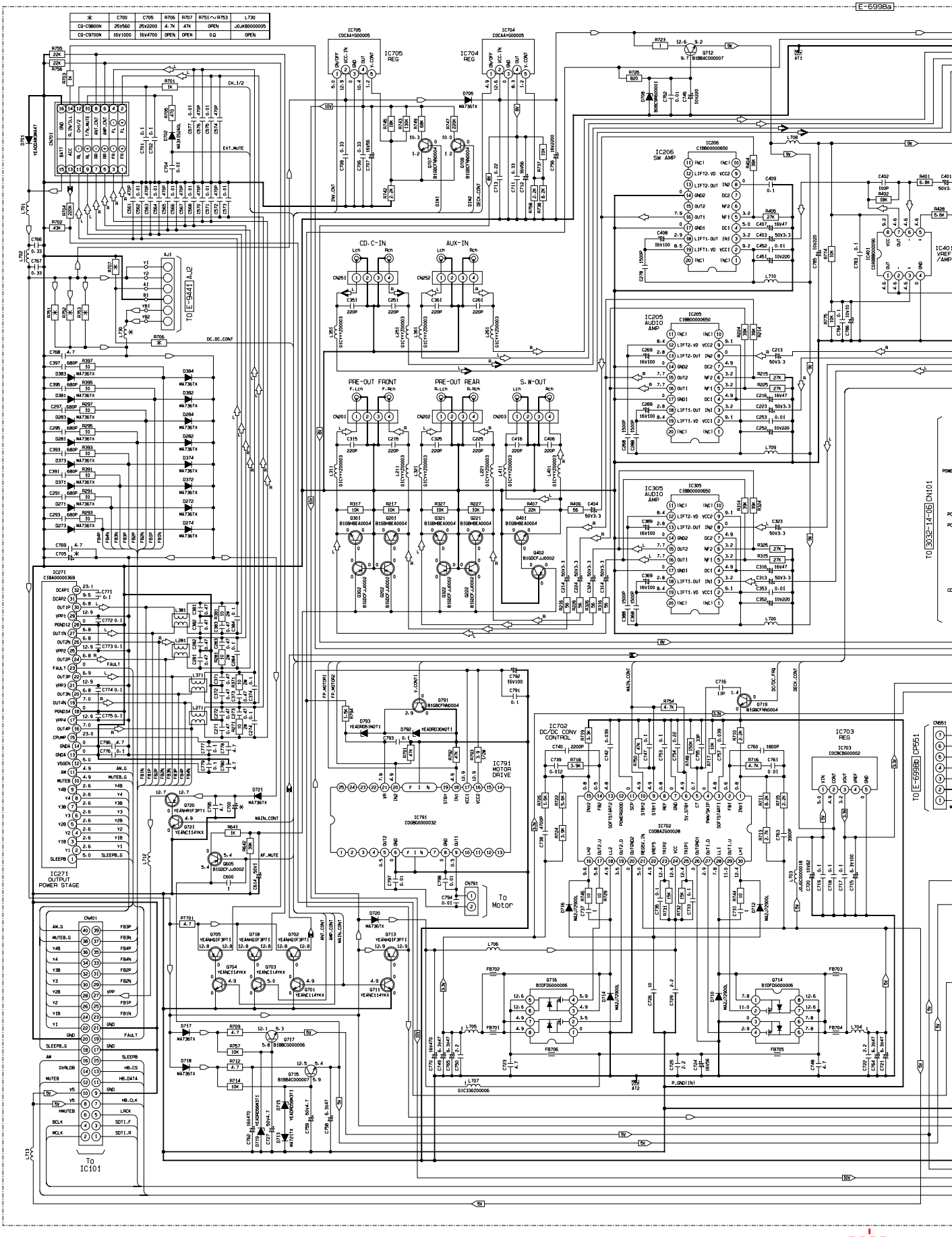

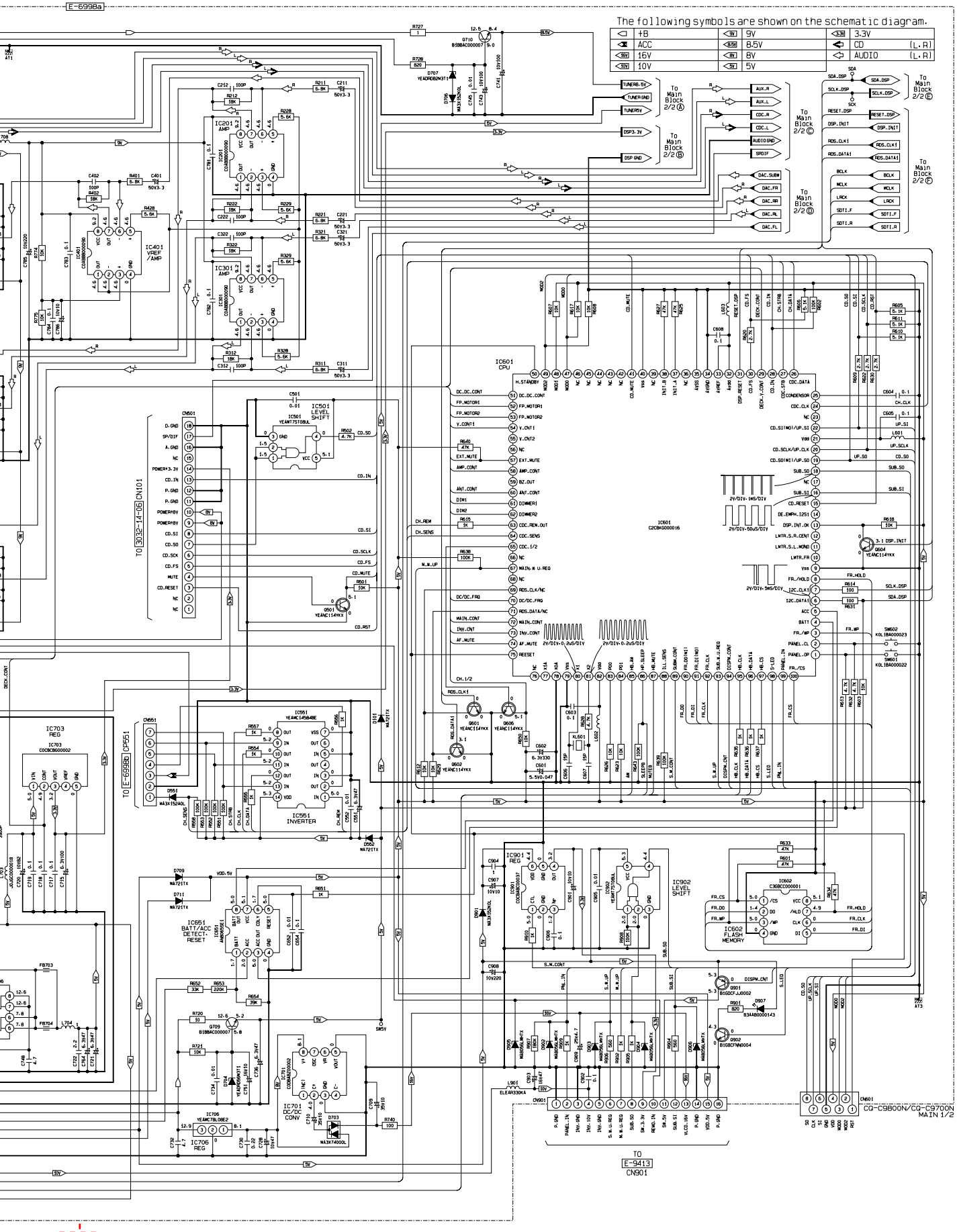
E-6998a
The following symbols are shown on the schematic diagram.
+B
ACC
16V
10V
9V
8.5V
8V
5V
3.3V
CD (L.R)
AUDIO (L.R)
To Main Block 2/2 Ⓐ
To Main Block 2/2 Ⓑ
To Main Block 2/2 Ⓒ
To Main Block 2/2 Ⓓ
To Main Block 2/2 Ⓔ
IC201 AMP
IC301 AMP
IC401 VREF /AMP
IC501 LEVEL SHIFT
IC601 CPU
IC551 INVERTER
IC651 BATT/ACC DETECT RESET
IC701 DC/DC CONV
IC703 REG
IC706 REG
IC901 REG
IC902 LEVEL SHIFT
IC602 FLASH MEMORY
TO 3032-14-06 CN101
TO E-6998b CP551
TO E-9413 CN901
CN601
CQ-C9800N/CQ-C9700N MAIN 1/2

19.2. Main-2/Connector Block

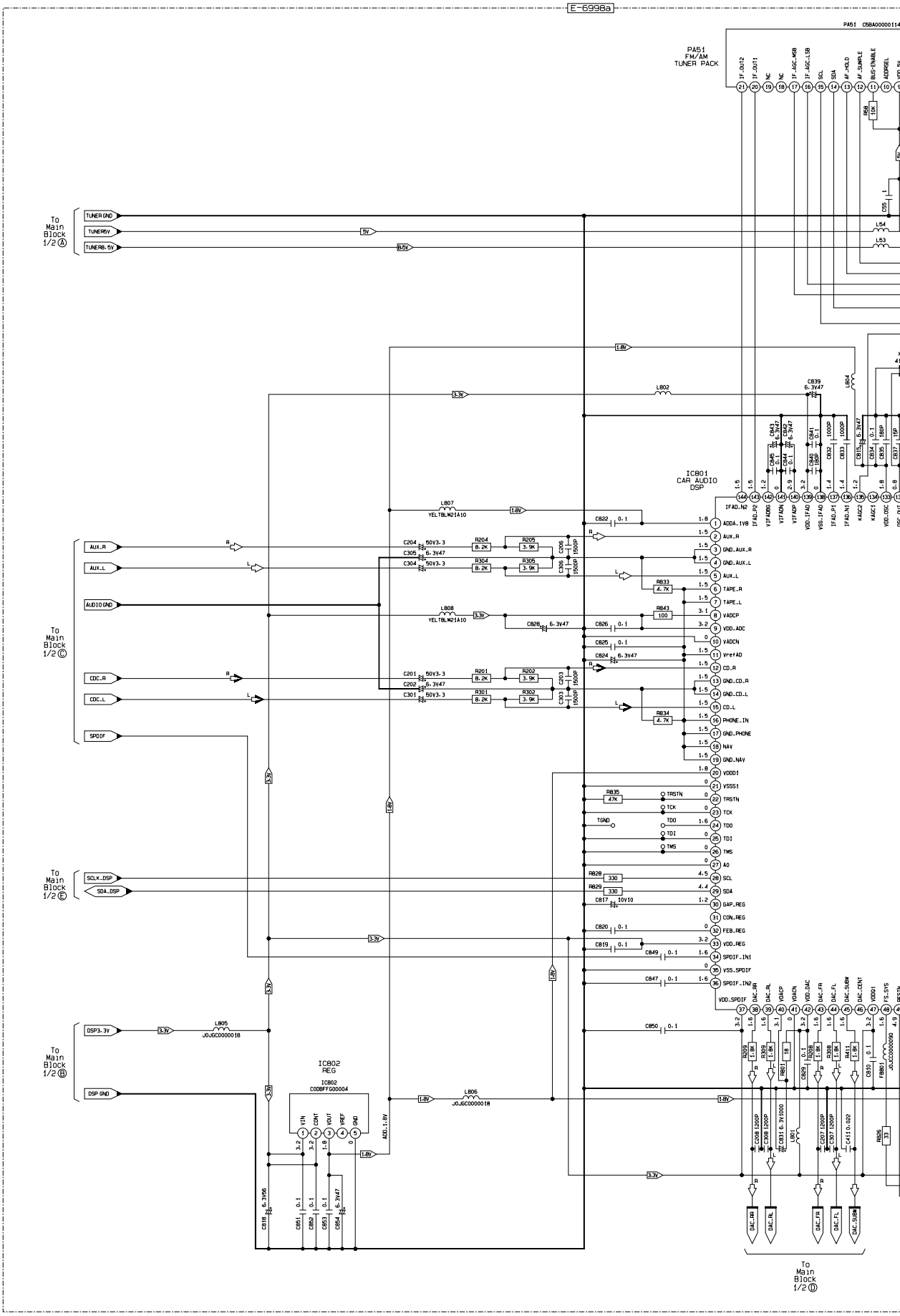

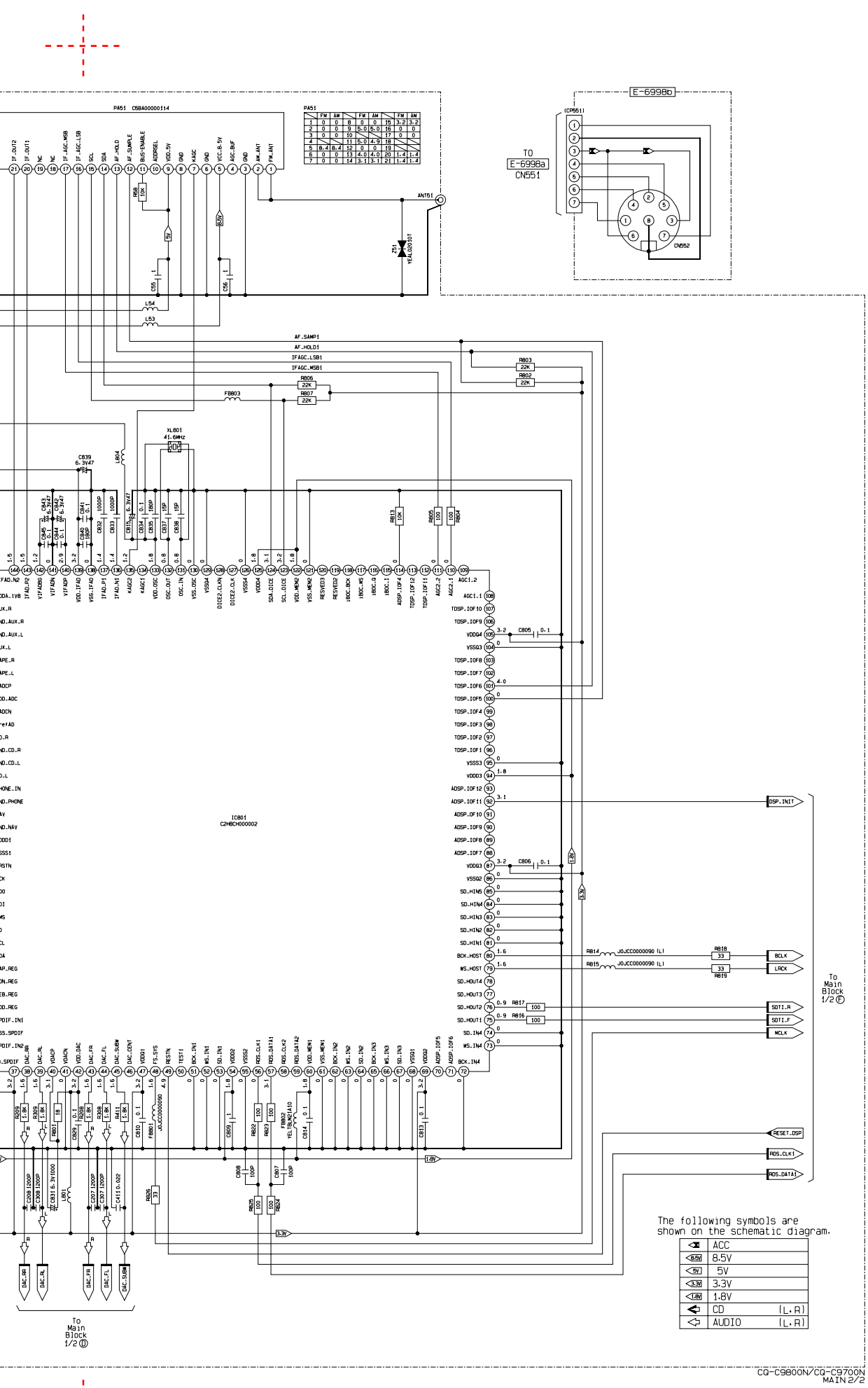

The following symbols are shown on the schematic diagram.

ACC	
8.5V	8.5V
5V	5V
3.3V	3.3V
1.8V	1.8V
CD	(L,R)
AUDIO	(L,R)

CQ-C9800N/CQ-C9700N
MAIN 2/2

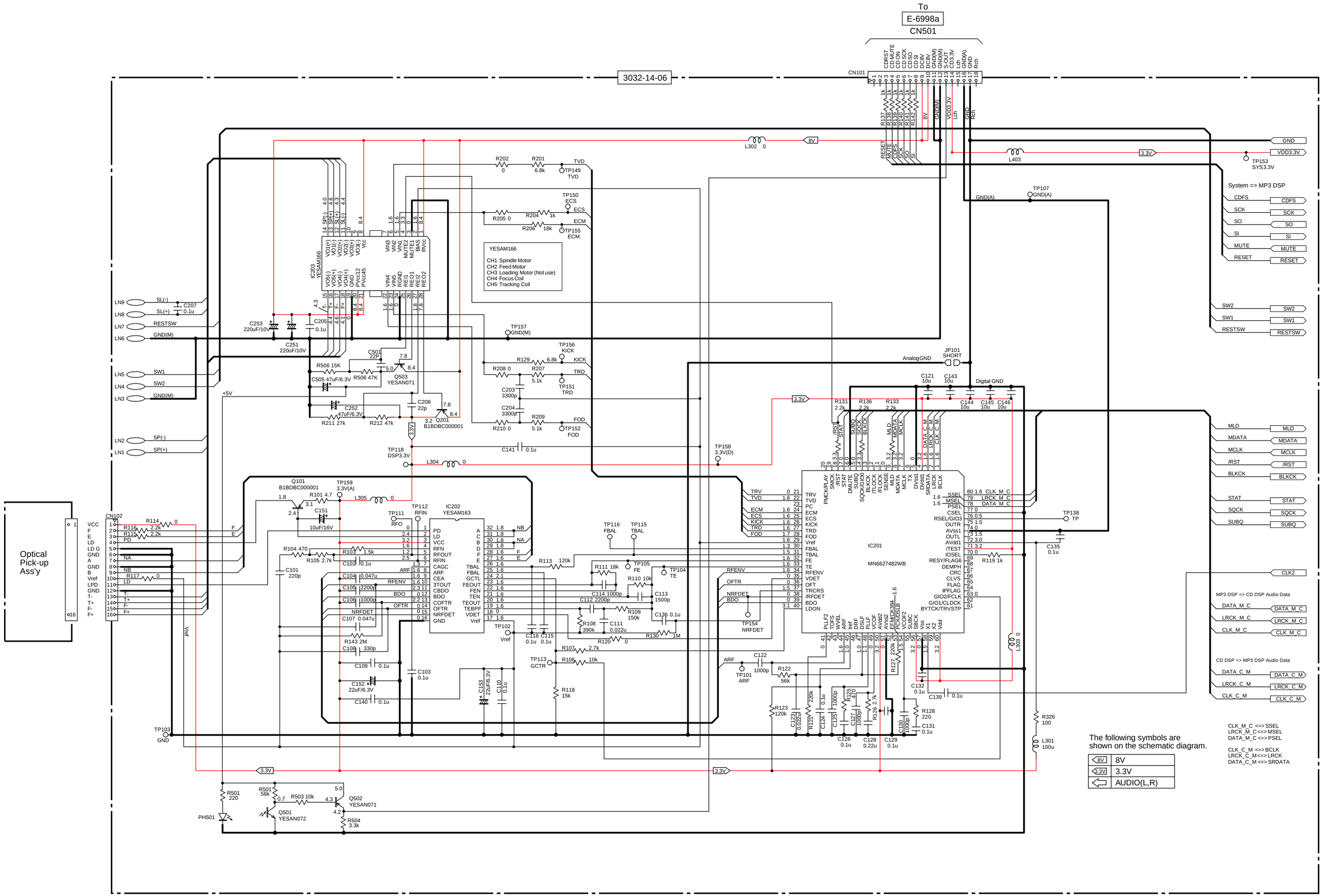
To
E-6998a
CN501
3032-14-06
CN101
CDRST
CD MUTE
CD ON
CD CSK
CD SO
CD SI
DC8V
DC8V
GND(M)
GND(M)
S OUT
CD3.3V
Lch
GND(A)
GND
Rch
RESET
MUTE
CDFS
SCK
SO
SI
8V
GND(M)
VDD3.3V
Lch
GND
Rch
L302 0
8V
L403
3.3V
GND
VDD3.3V
TP153
SYS3.3V
System => MP3 DSP
CDFS
SCK
SO
SI
MUTE
RESET
SW2
SW1
RESTSW
GND(A)
TP107
GND(A)
IC203
YESAM166
YESAM166
CH1 Spindle Motor
CH2 Feed Motor
CH3 Loading Motor (Not use)
CH4 Focus Coil
CH5 Tracking Coil
LN9 SL(-)
LN8 SL(+)
LN7 RESTSW
LN6 GND(M)
LN5 SW1
LN4 SW2
LN3 GND(M)
LN2 SP(-)
LN1 SP(+)
C207 0.1u
C253 220uF/10V
C251 220uF/10V
C205 0.1u
C501 22P
R506 15K
R506 47K
C505 47uF/6.3V
Q503 YESAN071
C252 47uF/6.3V
R211 27k
R212 47k
C208 22p
Q201 B1BDBC000001
+5V
3.3V
R202 0
R201 6.8k
TVD
TP149 TVD
TP150 ECS
ECS
R205 0
R204 1k
ECM
R206 18k
TP155 ECM
TP157 GND(M)
TP156 KICK
R129 6.8k
KICK
R208 0
R207 5.1k
TRD
TP151 TRD
C203 3300p
C204 3300p
R209 5.1k
FOD
R210 0
TP152 FOD
C141 0.1u
TP118 DSP3.3V
L304 0
TP158 3.3V(D)
Analog GND
JP101 SHORT
C121 10u
C143 10u
Digital GND
C144 10u
C145 10u
C146 10u
R131 2.2k
R136 2.2k
R133 2.2k
/RST
STAT
SUBQ
SQCK
BLKCK
MLD
MDATA
MCLK
DATA_C_M
LRCK_C_M
CLK_C_M
MLD
MDATA
MCLK
/RST
BLKCK
STAT
SQCK
SUBQ
CLK2
MP3 DSP => CD DSP Audio Data
DATA_M_C
LRCK_M_C
CLK_M_C
CD DSP => MP3 DSP Audio Data
DATA_C_M
LRCK_C_M
CLK_C_M
Q101 B1BDBC000001
TP159 3.3V(A)
R101 4.7
L305 0
C151 10uF/16V
TP111 RFO
TP112 RFIN
IC202 YESAM163
R104 470
R105 2.7k
R103 1.5k
C102 0.1u
C101 220p
C104 0.047u
C105 2200p
C106 1000p
NRFDET
C107 0.047u
R143 2M
C108 330p
C109 0.1u
C152 22uF/6.3V
C140 0.1u
C103 0.1u
C153 22uF/6.3V
C110 0.1u
R118 15k
TP113 GCTR
R107 2.7k
R106 10k
TP102 Vref
C116 0.1u
C115 0.1u
R113 120k
TP116 FBAL
TP115 TBAL
R111 18k
TP105 FE
TP104 TE
R110 10k
C114 1000p
C113 1500p
C112 2200p
R109 150k
R108 390k
C111 0.022u
C136 0.1u
R120 0
R130 1M
IC201
MN6627482WB
TP154 NRFDET
TP101 ARF
C122 1000p
R122 56k
R123 120k
C123 0.022u
R121 220k
C124 0.1u
C125 1000p
R125 270
C127 1000p
R126 2.7k
C126 0.1u
C128 0.22u
C129 0.1u
C130 1000p
R128 220
C131 0.1u
C132 0.1u
C139 0.1u
R127 220k
TP138 TP
C135 0.1u
R119 1k
L303 0
R326 100
L301 100u
Optical Pick-up Ass'y
CN102
VCC
F
E
LD
LD G
GND
A
GND
B
Vref
LPD
GND
T-
T+
F-
F+
R116 2.2k
R115 2.2k
PD
NA
NB
R117 0
LD
R114 0
Vref
TP103 GND
R501 220
PH501
R501 56k
Q501 YESAN072
R503 10k
Q502 YESAN071
R504 3.3k
The following symbols are shown on the schematic diagram.
8V 8V
3.3V 3.3V
AUDIO(L,R)
CLK_M_C <=> SSEL
LRCK_M_C<=> MSEL
DATA_M_C <=> PSEL
CLK_C_M <=> BCLK
LRCK_C_M<=> LRCK
DATA_C_M <=> SRDATA

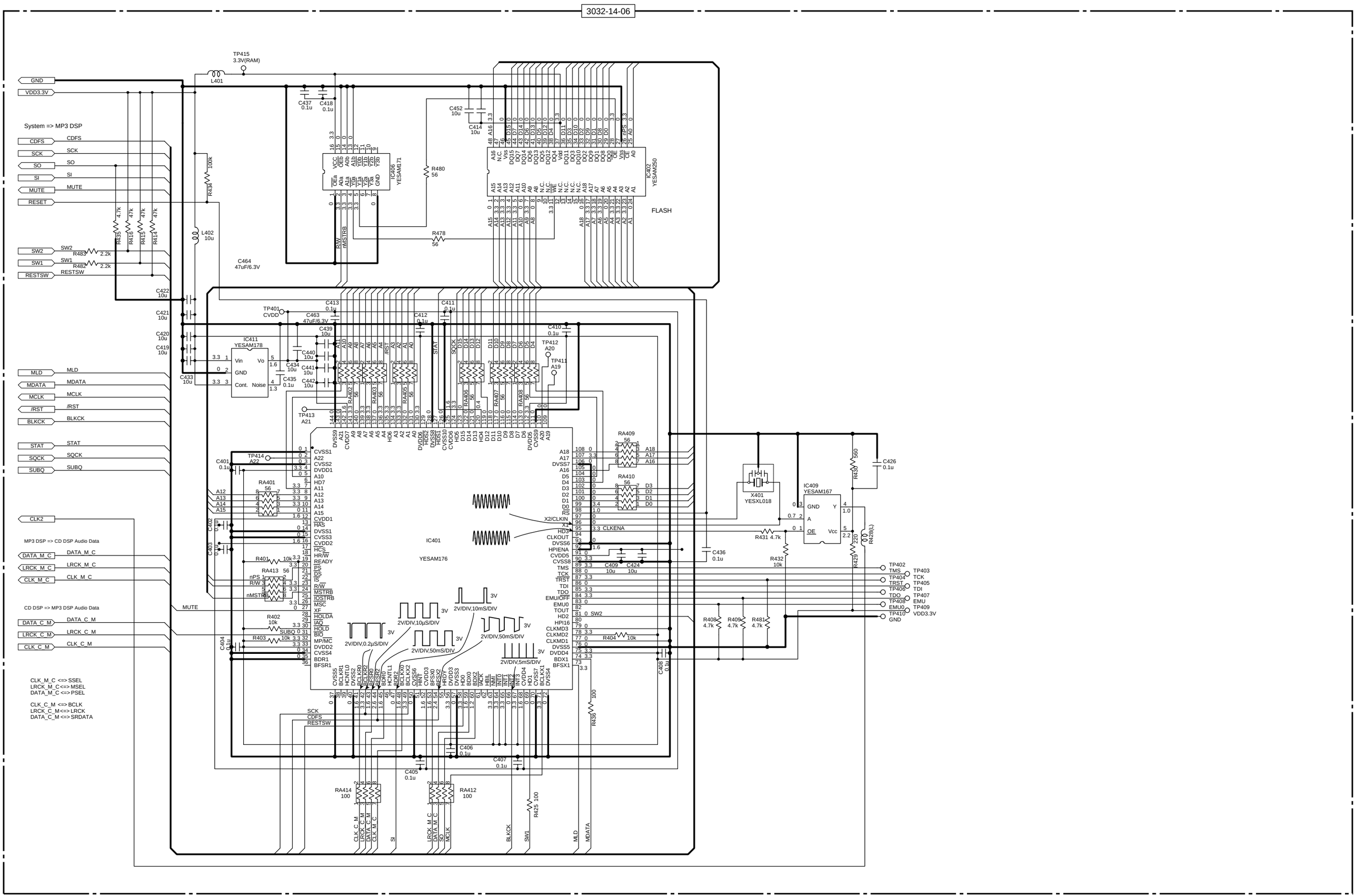
GND
VDD3.3V
TP415
3.3V(RAM)
L401
System => MP3 DSP
CDFS
SCK
SO
SI
MUTE
RESET
SW2
SW1
RESTSW
R483 2.2k
R482 2.2k
R435 4.7k
R415 47k
R414 47k
R434 100k
L402 10u
C464 47uF/6.3V
C437 0.1u
C418 0.1u
C452 10u
C414 10u
R480 56
R478 56
IC406 YESAM171
IC402 YESAM250
FLASH
C422 10u
C421 10u
C420 10u
C419 10u
C433 10u
TP401 CVDD
C463 47uF/6.3V
C413 0.1u
C412 0.1u
C411 0.1u
C410 0.1u
C439 10u
C440 10u
C441 10u
C442 10u
C434 10u
C435 0.1u
IC411 YESAM178
Vin
Vo
GND
Cont.
Noise
TP412 A20
TP411 A19
TP413 A21
TP414 A22
MLD
MDATA
MCLK
/RST
BLKCK
STAT
SQCK
SUBQ
CLK2
MP3 DSP => CD DSP Audio Data
DATA_M_C
LRCK_M_C
CLK_M_C
CD DSP => MP3 DSP Audio Data
DATA_C_M
LRCK_C_M
CLK_C_M
MUTE
C401 0.1u
C402 0.1u
C403 0.1u
C404 0.1u
RA401 56
RA413 56
R401 10k
R402 10k
R403 10k
IC401
YESAM176
RA409 56
RA410 56
X401 YESXL018
IC409 YESAM167
GND
A
OE
Y
Vcc
R430 560
C426 0.1u
R428(L) 220
R429 220
R431 4.7k
R432 10k
C436 0.1u
C409 10u
C424 10u
R404 10k
R408 4.7k
R409 4.7k
R481 4.7k
C408 0.1u
TP402 TMS
TP404 TRST
TP406 TDI
TP408 EMU0
TP410 GND
TP403 TCK
TP405 TDO
TP407 EMU
TP409 VDD3.3V
2V/DIV,10μS/DIV
2V/DIV,10mS/DIV
2V/DIV,0.2μS/DIV
2V/DIV,50mS/DIV
2V/DIV,50mS/DIV
2V/DIV,5mS/DIV
3V
R436 100
C406 0.1u
C407 0.1u
C405 0.1u
RA414 100
RA412 100
R425 100
CLK_M_C <=> SSEL
LRCK_M_C <=> MSEL
DATA_M_C <=> PSEL
CLK_C_M <=> BCLK
LRCK_C_M <=> LRCK
DATA_C_M <=> SRDATA

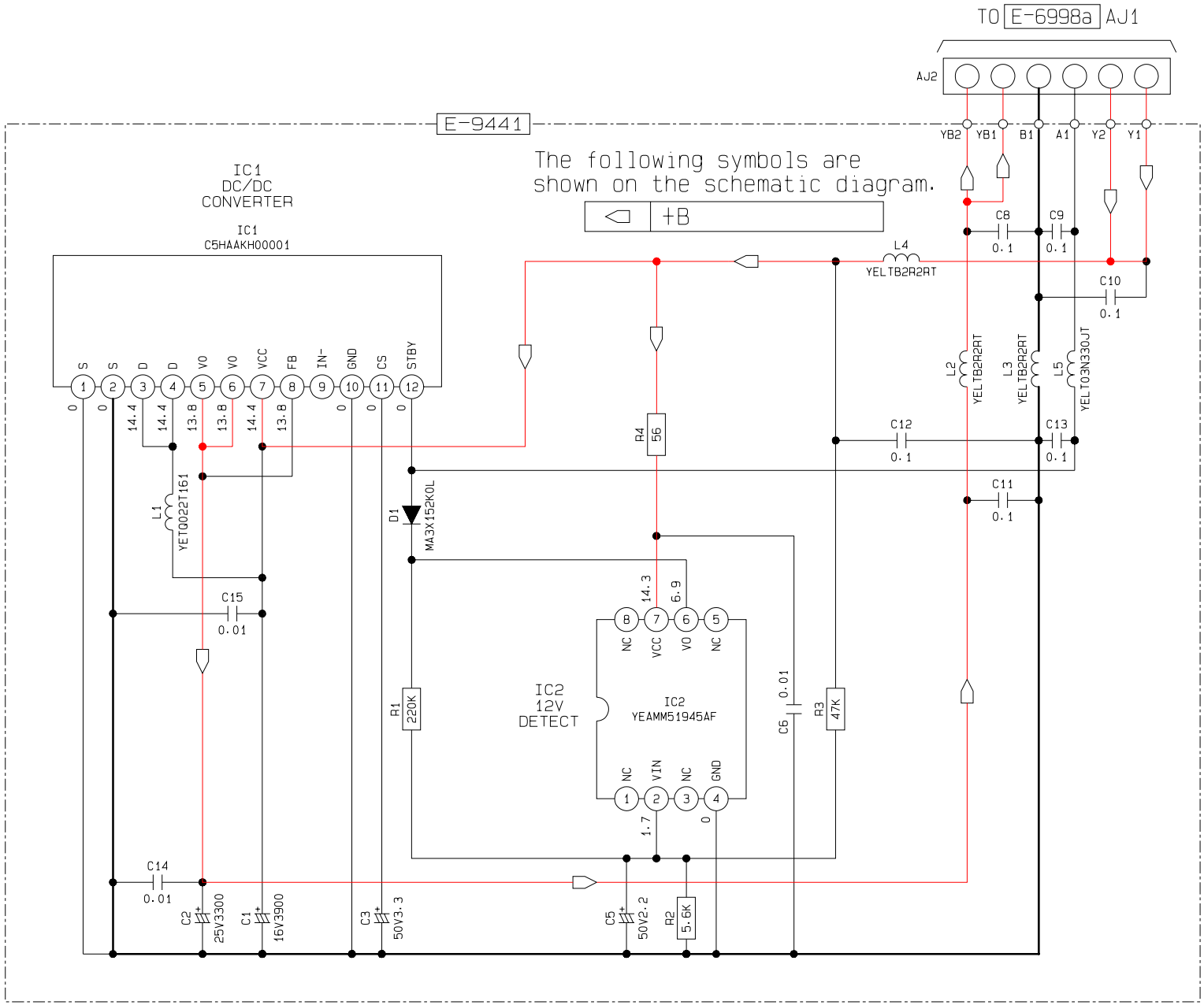

CQ-C9800N
DC/DC

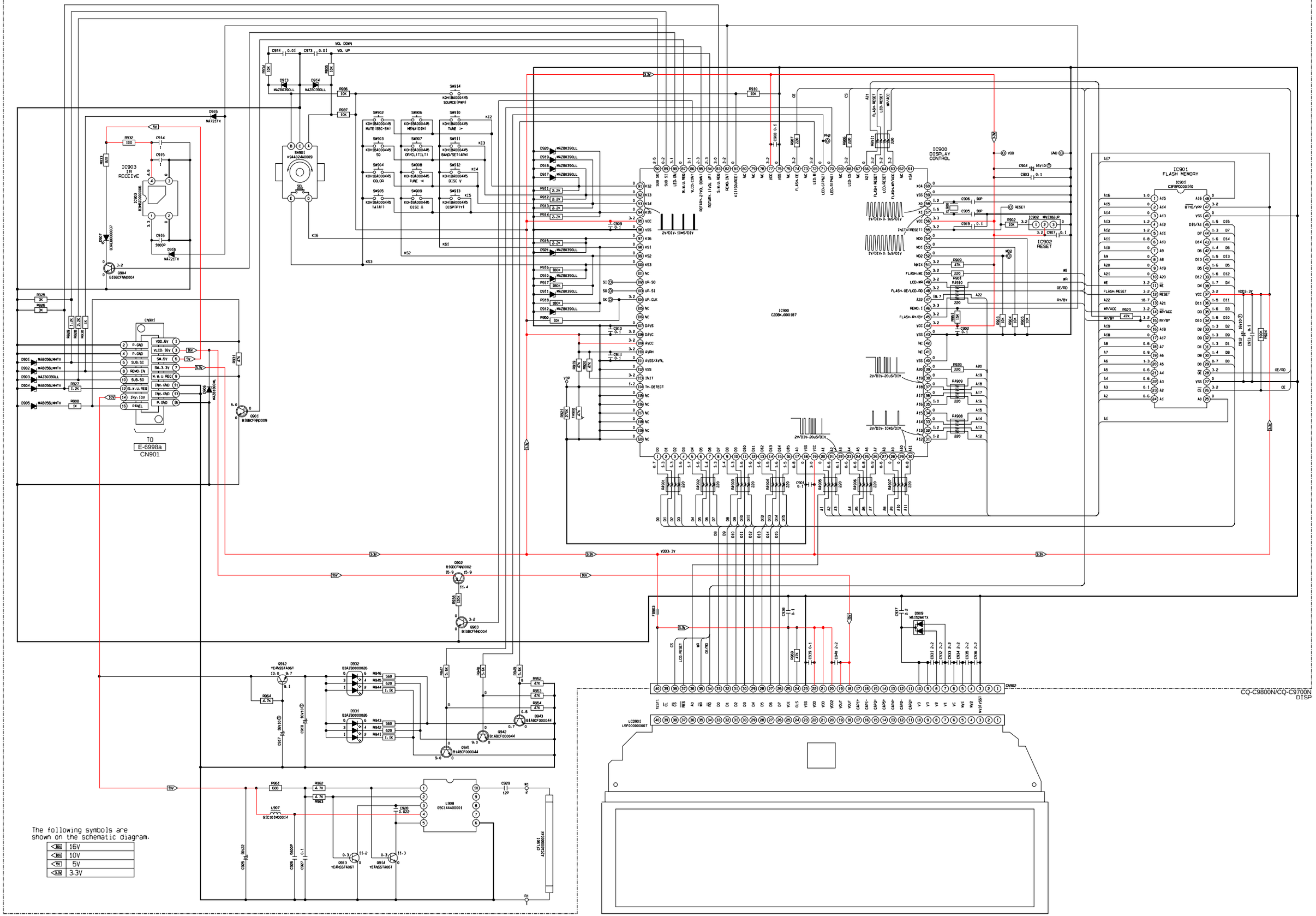
IC903
IR
RECEIVE
IC900
DISPLAY
CONTROL
IC901
FLASH MEMORY
IC902
RESET
CN901
T0
E-6998a
CN901
CN902
LCD901
L59F000000007
CQ-C9800N/CQ-C9700N
DISP
The following symbols are
shown on the schematic diagram.
16V
10V
5V
3.3V

✳	C700	C705	R706	R707	R751～R753	L730
CG-C9800N	25V560	25V2200	4.7K	47K	OPEN	JOUK80000005
CG-C9700N	16V1000	16V4700	OPEN	OPEN	0Ω	OPEN

The following symbols are shown on the schematic diagram.

+B	9V	3.3V	ACC	8.5V	16V
8V	5V	CD (L,R)	10V	AUDIO (L,R)	

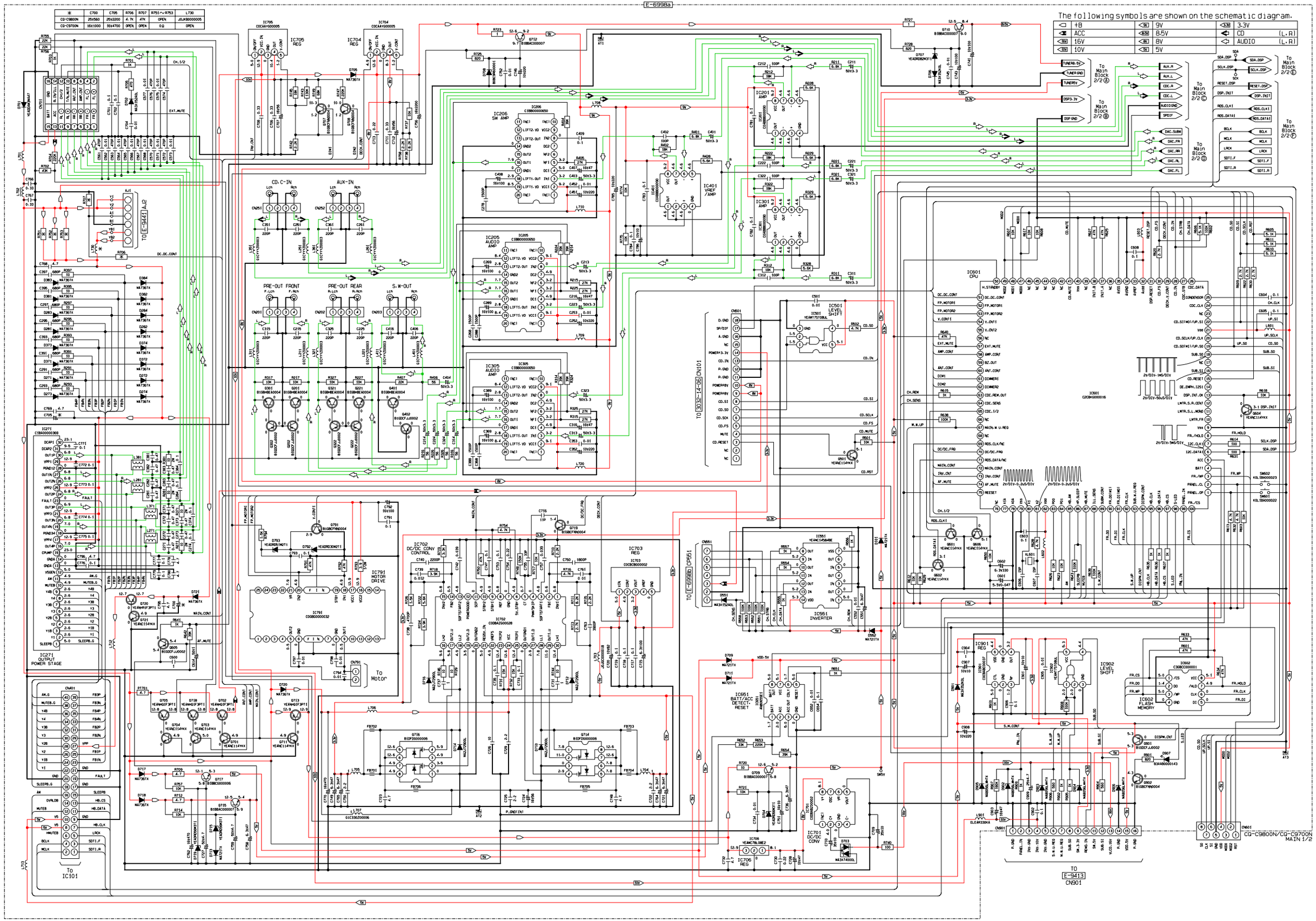

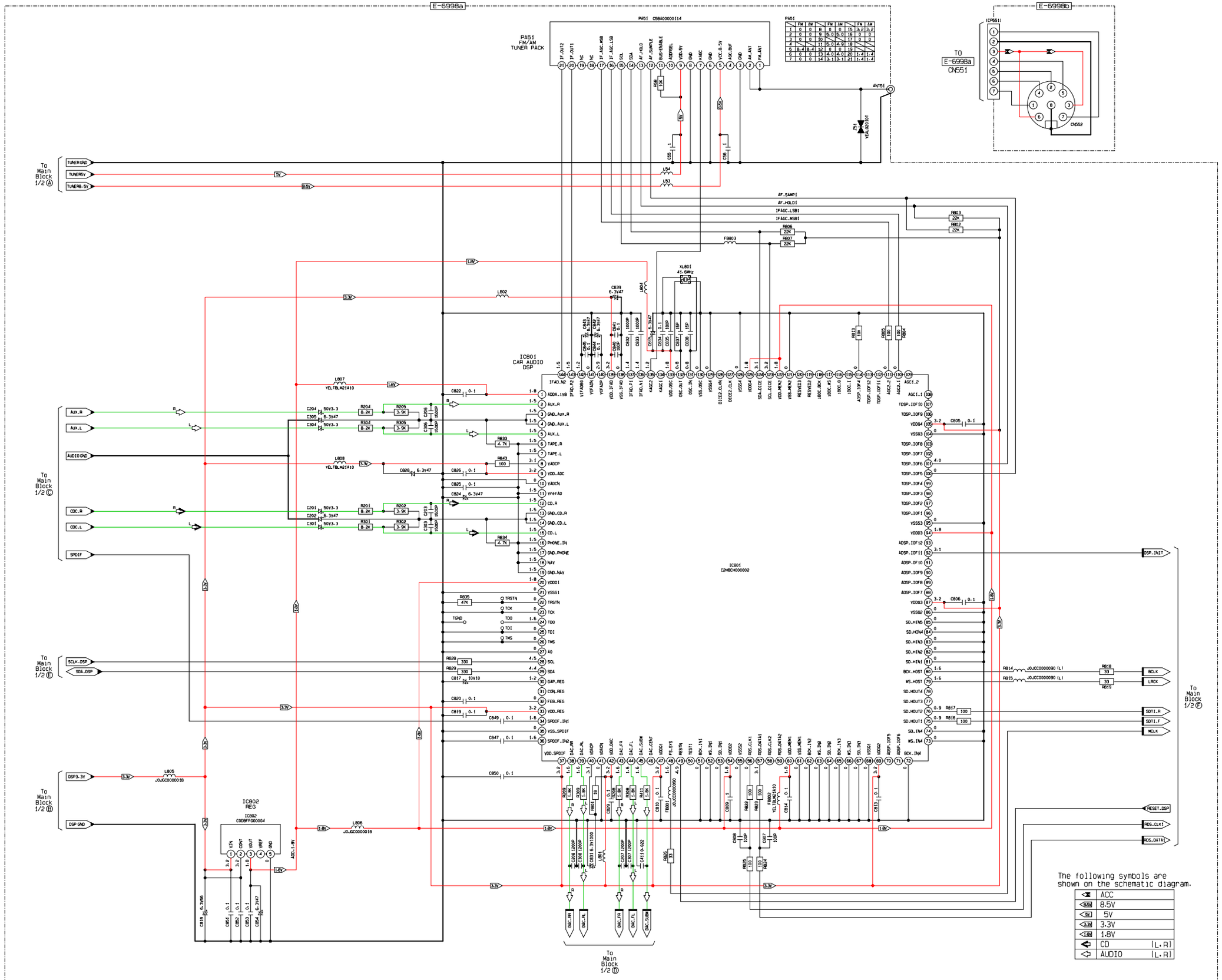
E-6998a
E-6998b
PA51
FM/AM
TUNER PACK
PA51 C5BA00000114
TO
E-6998a
CN551
CN552
ICB01
CAR AUDIO
DSP
ICB01
C2HBCH000002
ICB02
REG
ICB02
C0DBFF000004
To
Main
Block
1/2 Ⓐ
To
Main
Block
1/2 Ⓒ
To
Main
Block
1/2 Ⓔ
To
Main
Block
1/2 Ⓑ
To
Main
Block
1/2 Ⓓ
To
Main
Block
1/2 Ⓕ
TUNERGND
TUNER5V
TUNER8.5V
AUX.R
AUX.L
AUDIOGND
CDC.R
CDC.L
SPDIF
SCLK.DSP
SDA.DSP
DSP3.3V
DSP GND
DSP.INIT
BCLK
LRCK
SDTI.R
SDTI.F
MCLK
RESET.DSP
RDS.CLK1
RDS.DATA1
DAC.SR
DAC.SL
DAC.FR
DAC.FL
DAC.SUBW
AF.SAMP1
AF.HOLD1
1FAGC.LSB1
1FAGC.MSB1
ANT51
Z51
YEL1ZZ001
L54
L53
L52
L602
L807
L808
L805
L806
L801
L804
XL801
41.6MHz
FB803
R803
22K
R802
22K
R806
22K
R807
22K
R204
8.2K
R205
3.9K
R304
8.2K
R305
3.9K
R201
8.2K
R202
3.9K
R301
8.2K
R302
3.9K
R33
4.7K
R34
4.7K
R43
100
R35
47K
R28
330
R29
330
R17
100
R16
100
R18
33
R19
33
R26
33
R24
100
R25
100
R23
100
R22
100
R21
100
R20
100
R13
100
R14
100
R15
100
R11
1.8K
R10
1.8K
R9
1.8K
R8
1.8K
R7
18
R6
1.8K
R5
1.8K
R4
1.8K
R3
1.8K
R2
1.8K
R1
1.8K
R12
100
R95
100
R94
100
R96
100
R97
100
R98
100
R99
100
R100
100
R101
100
R102
100
R103
100
R104
100
R105
100
R106
100
R107
100
R108
100
R109
100
R110
100
R111
100
R112
100
R113
100
R114
100
R115
100

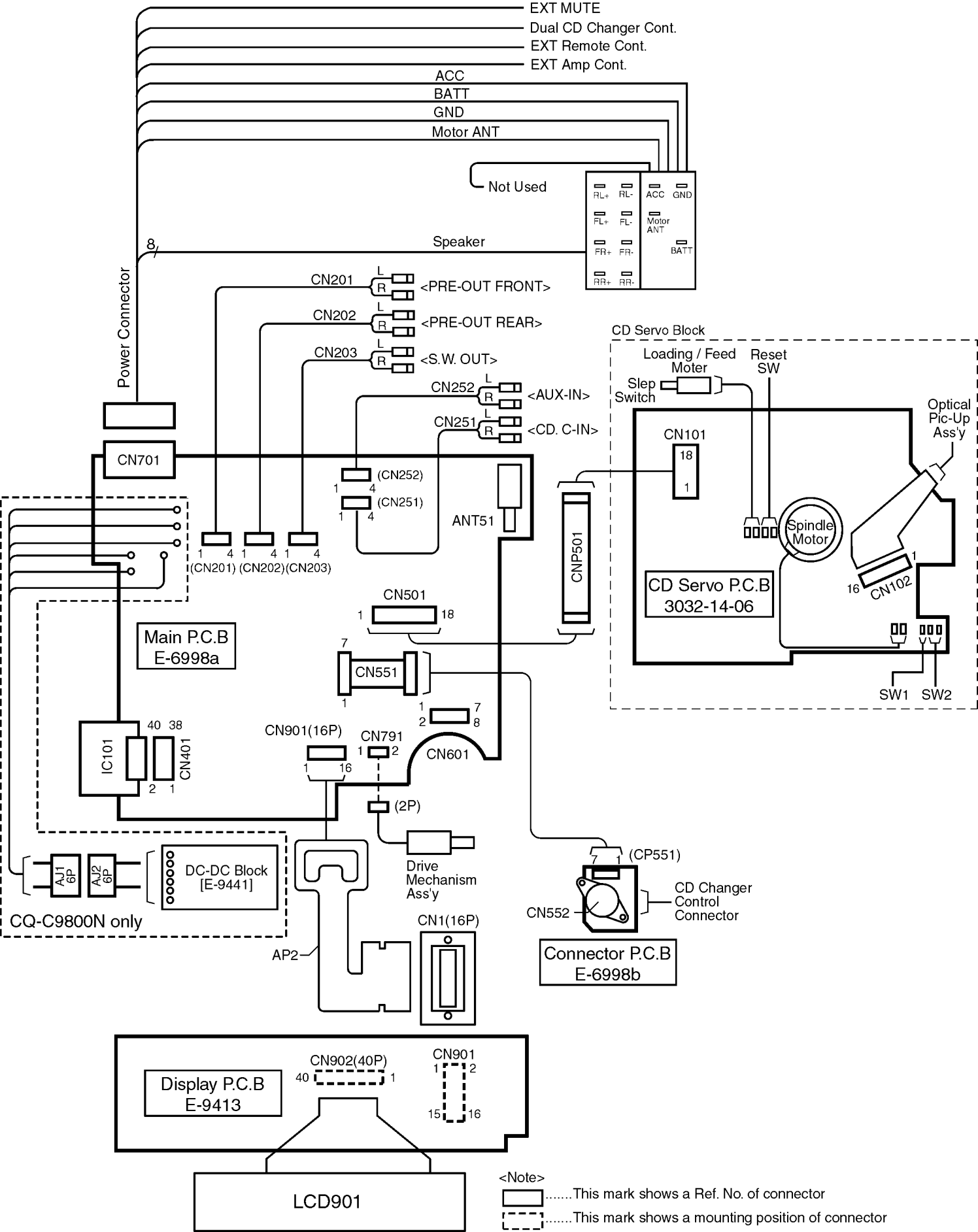
EXT MUTE
Dual CD Changer Cont.
EXT Remote Cont.
EXT Amp Cont.
ACC
BATT
GND
Motor ANT
Not Used
RL+ RL-
FL+ FL-
FR+ FR-
RR+ RR-
ACC GND
Motor ANT
BATT
Speaker
8
Power Connector
CN201
<PRE-OUT FRONT>
CN202
<PRE-OUT REAR>
CN203
<S.W. OUT>
CN252
<AUX-IN>
CN251
<CD. C-IN>
CN701
(CN252)
(CN251)
ANT51
(CN201) (CN202) (CN203)
CN501
Main P.C.B
E-6998a
CN551
IC101
CN401
CN901(16P)
CN791
CN601
(2P)
Drive Mechanism Ass'y
AJ1 6P
AJ2 6P
DC-DC Block [E-9441]
CQ-C9800N only
AP2
CN1(16P)
CN552
(CP551)
CD Changer Control Connector
Connector P.C.B
E-6998b
CD Servo Block
Loading / Feed Moter
Reset SW
Slep Switch
CN101
Optical Pic-Up Ass'y
Spindle Motor
CN102
CD Servo P.C.B
3032-14-06
SW1 SW2
CNP501
Display P.C.B
E-9413
CN902(40P)
CN901
LCD901
<Note>
.....This mark shows a Ref. No. of connector
.....This mark shows a mounting position of connector

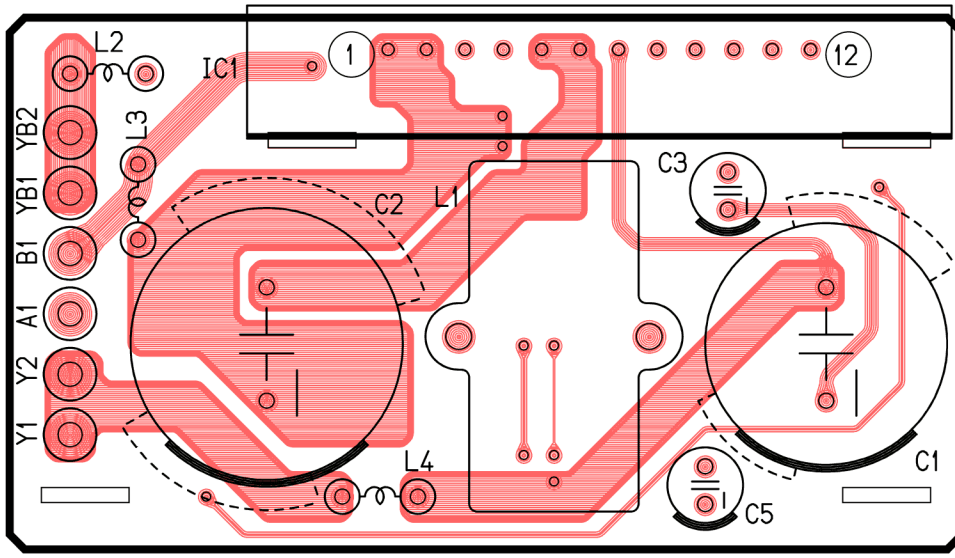

[E-9441][Top View]

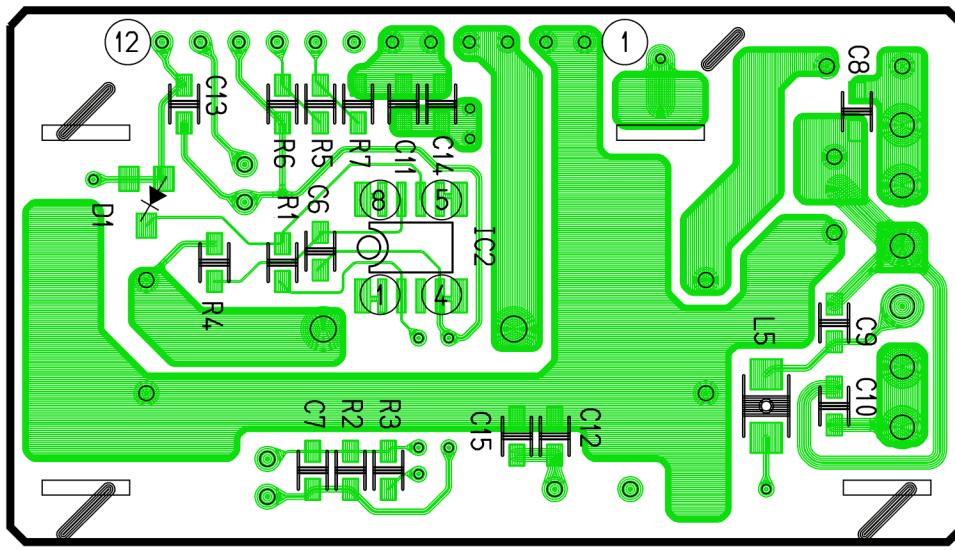

[E-9441][Bottom View]

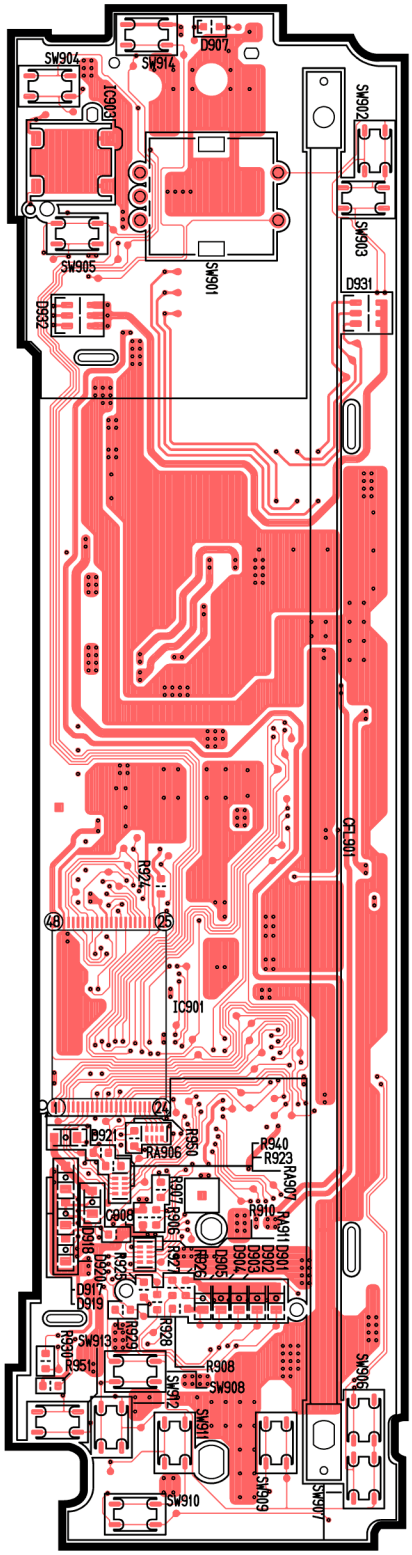

[E-9413][Top View]

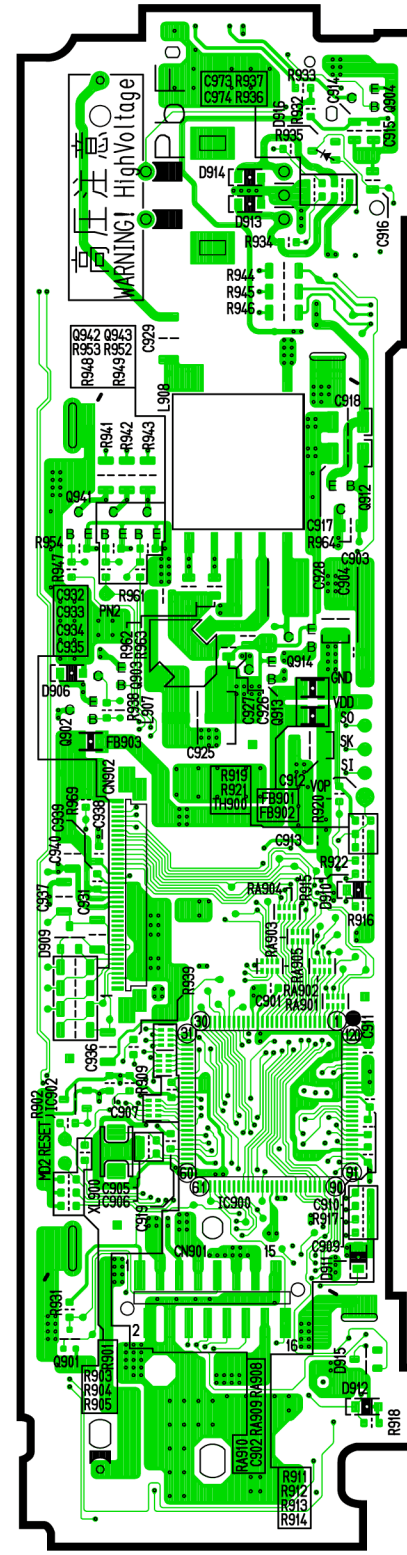

[E-9413][Bottom View]

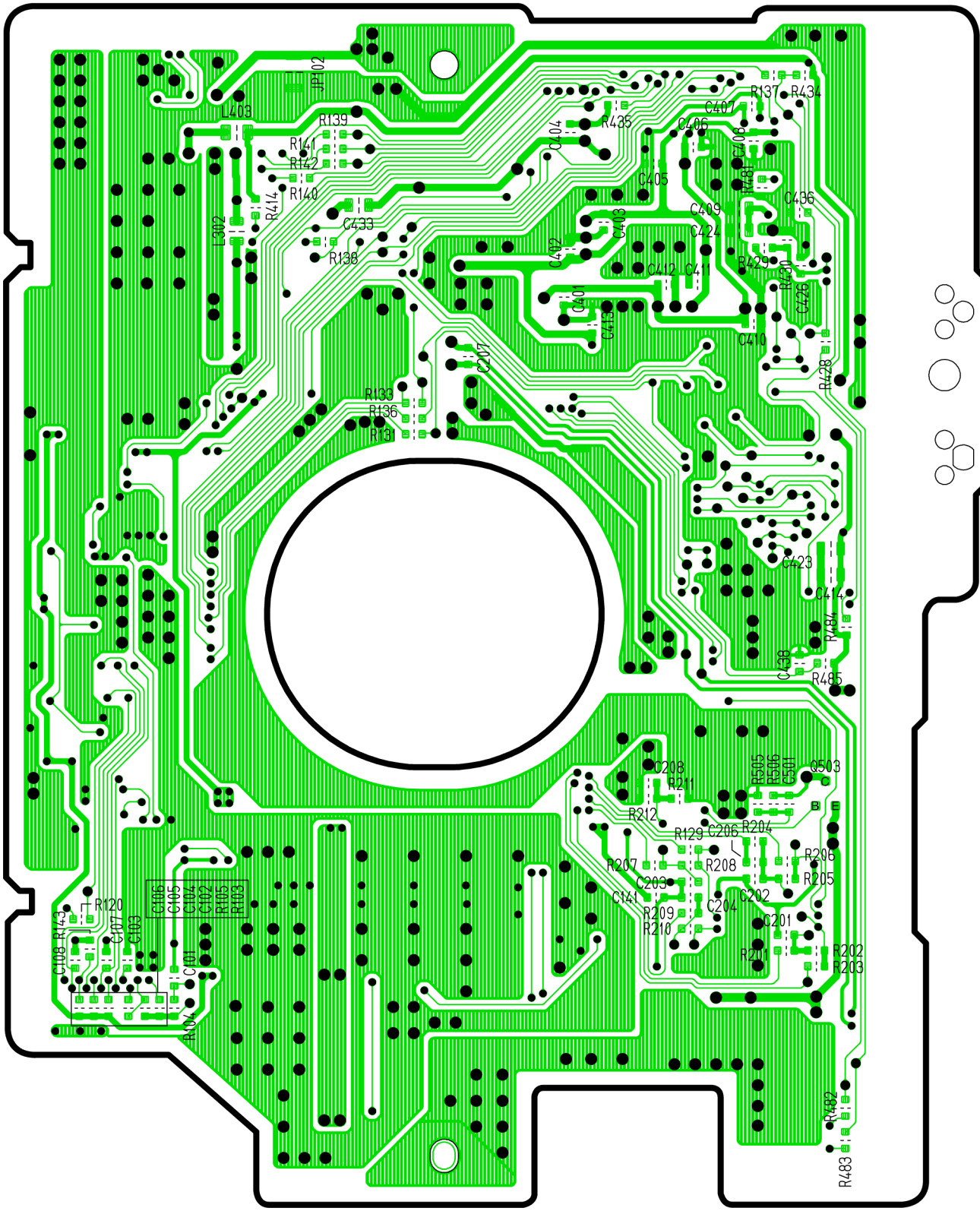

[3032-14-06][Bottom View]

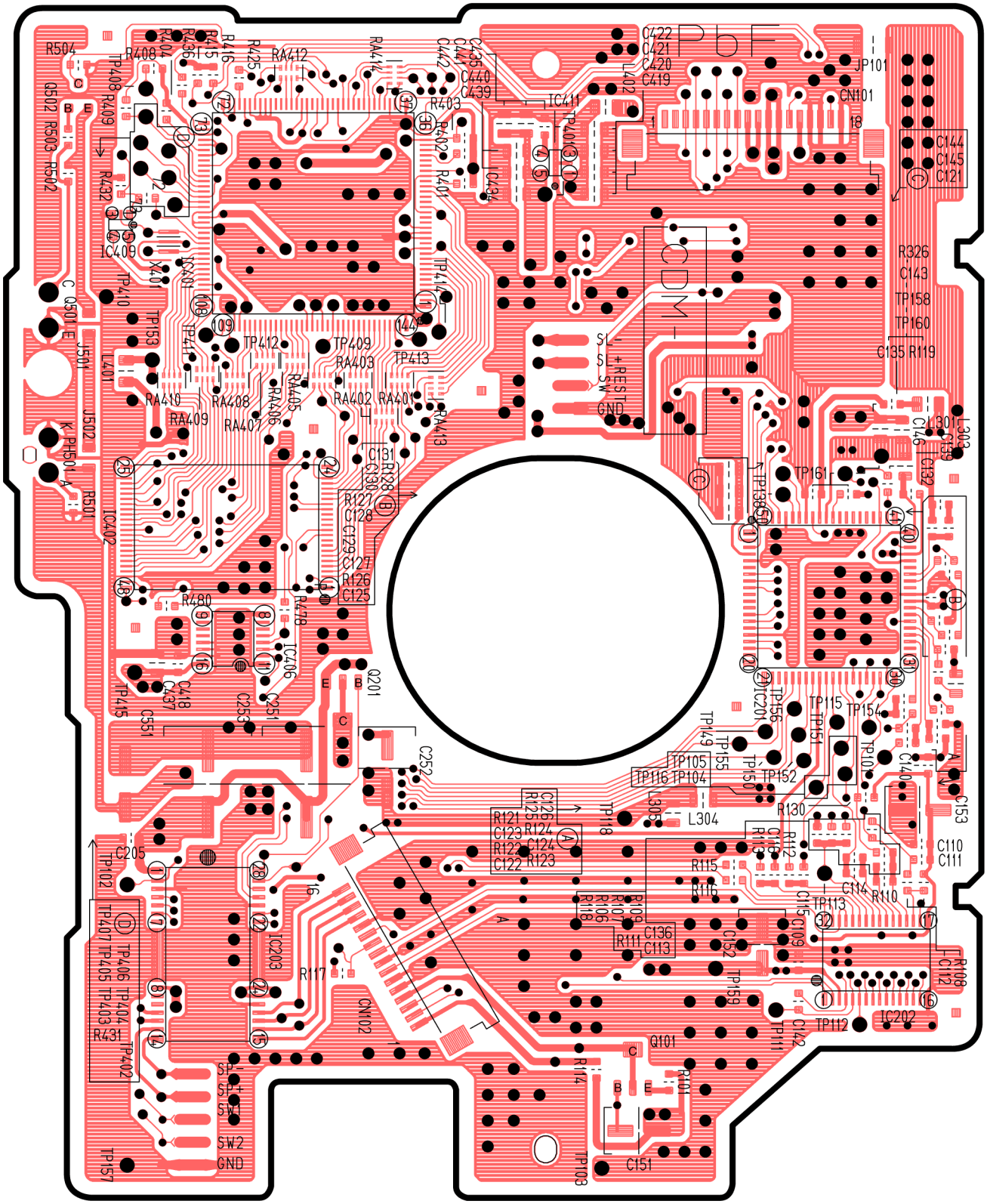

[3032-14-06][Top View]

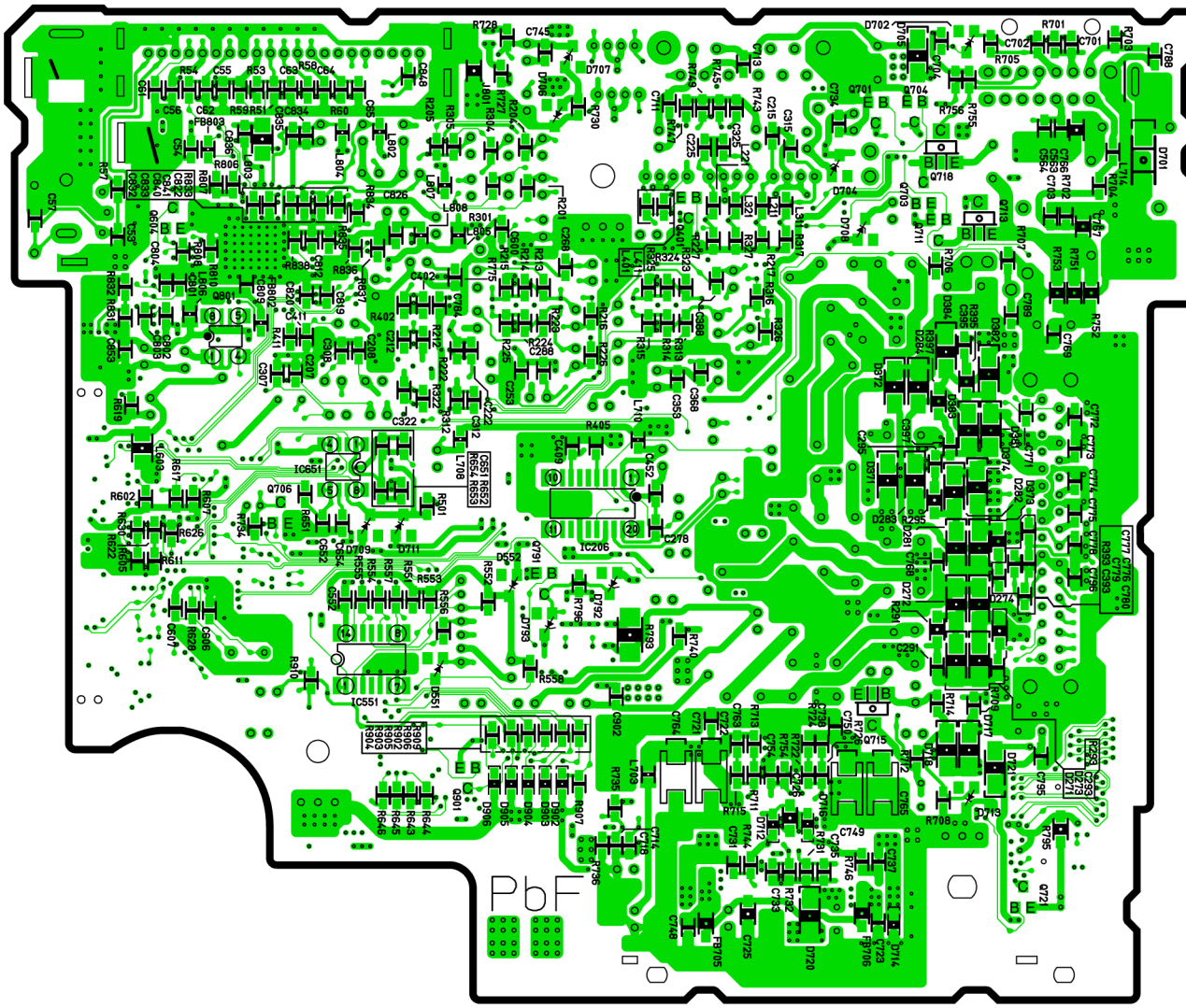

[E-6998a][Bottom View]

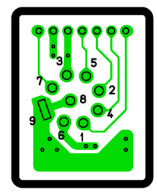

[E-6998b][Bottom View]

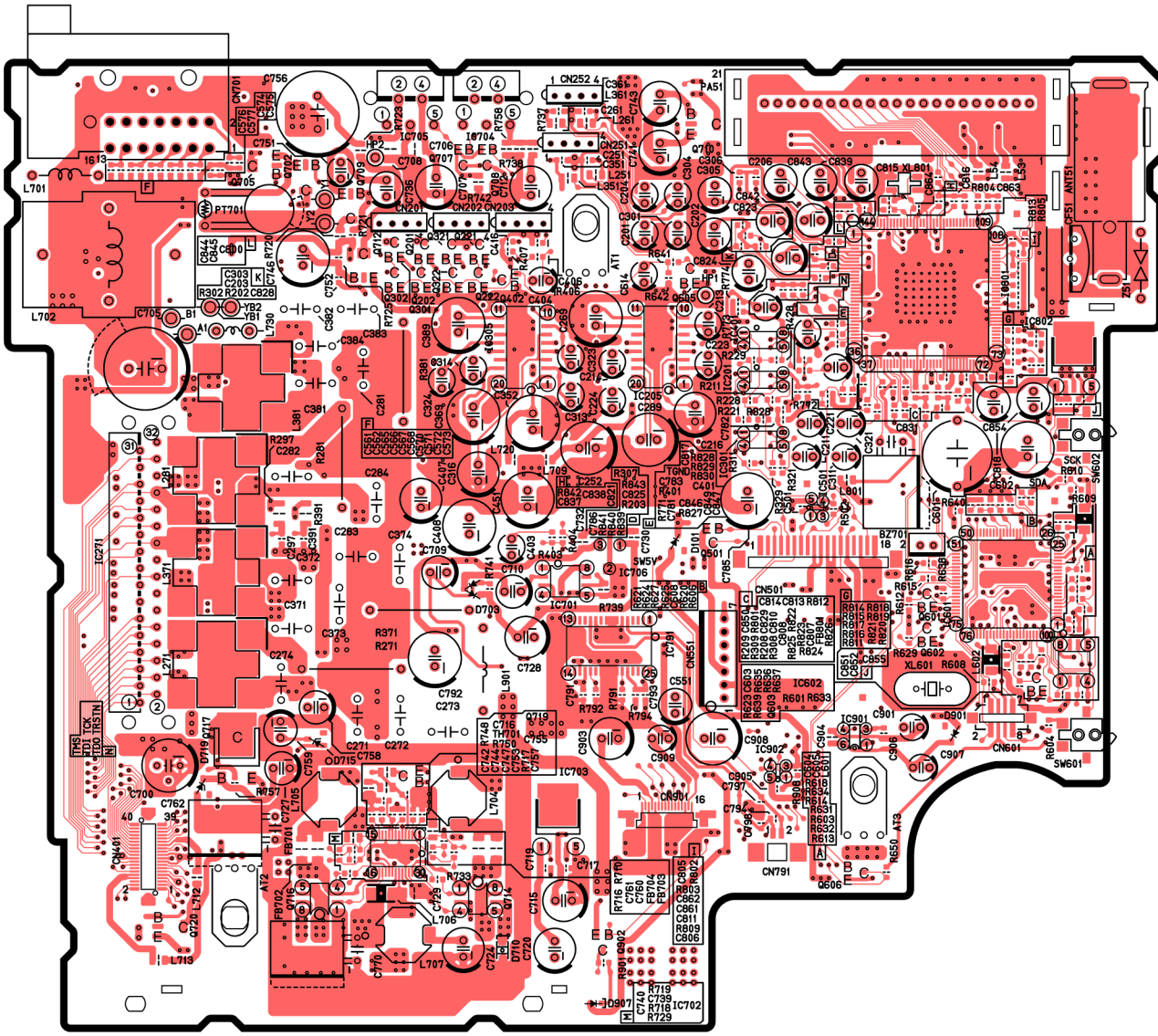

[E-6998a][Top View]

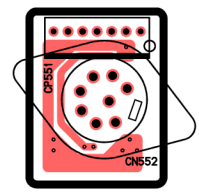

[E-6998b][Top View]

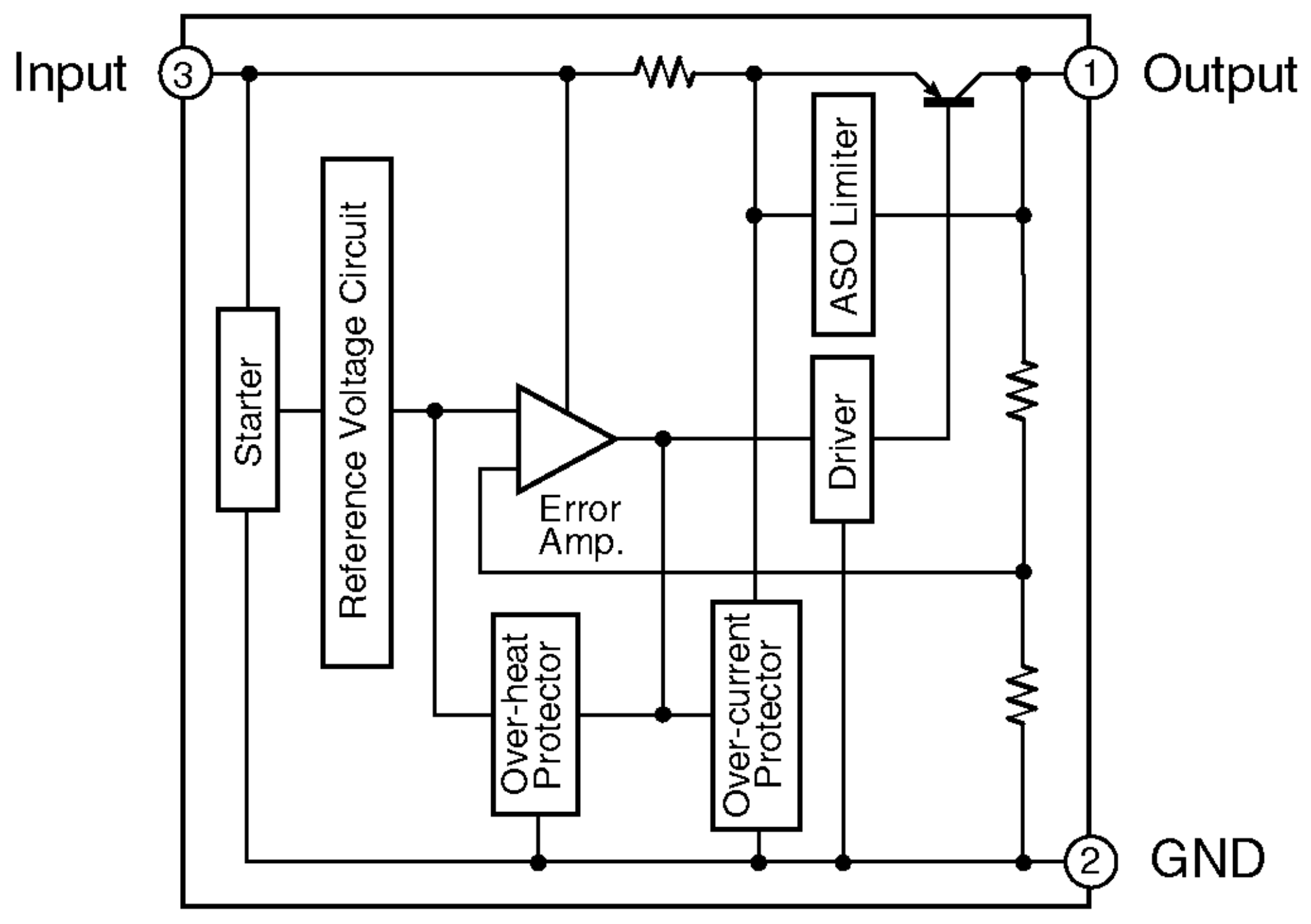
Input
3
1
Output
Starter
Reference Voltage Circuit
Error
Amp.
ASO Limiter
Driver
Over-heat
Protector
Over-current
Protector
2
GND

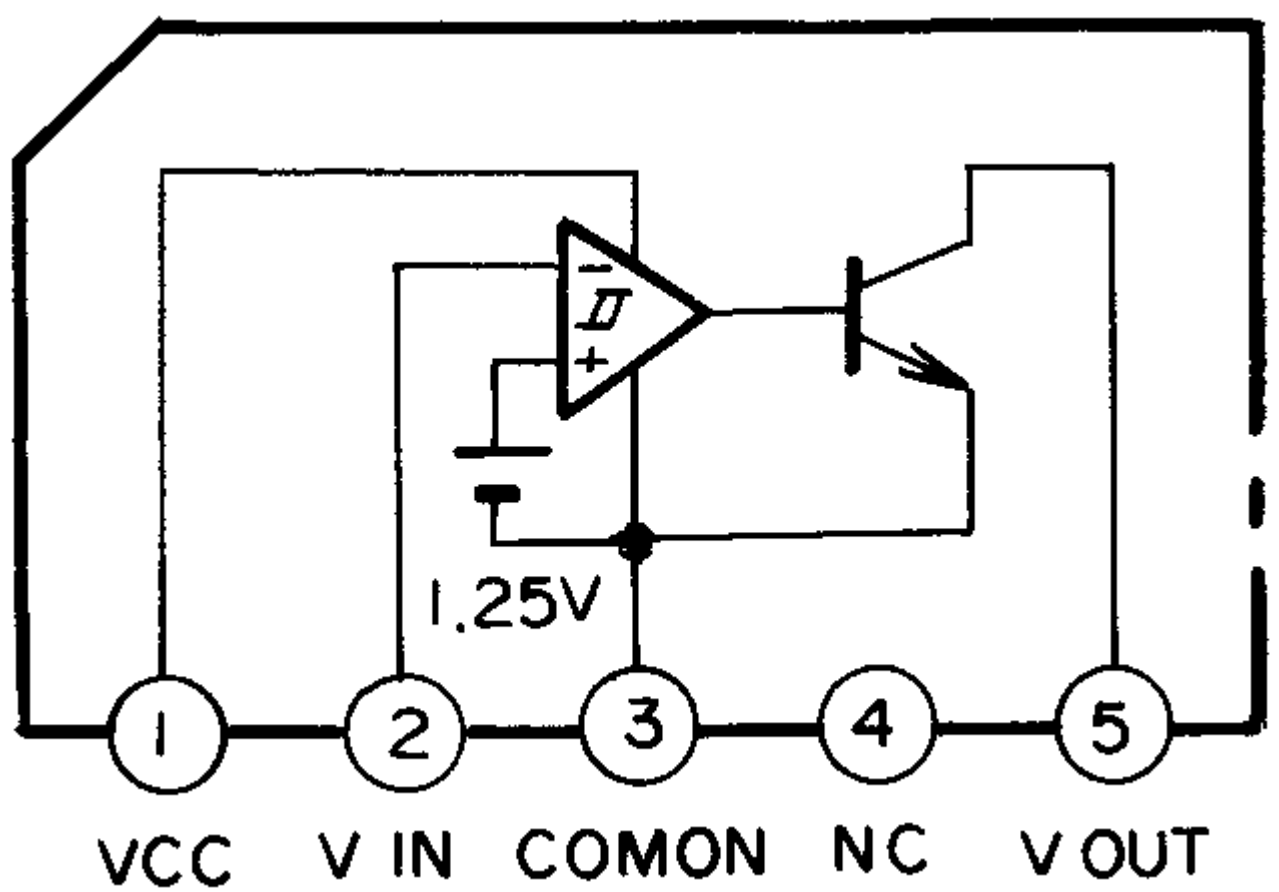
1.25V
1
2
3
4
5
VCC
V IN
COMON
NC
V OUT