POWER
MENU
SOUND
SFI
VOL
MUTE
#
1
2
3
4
5
6
7
8
9
0
DISP
SET
Panasonic
Car Audio

PWR
SOURCE
VOLUME
MP3/WMA
Panasonic
CQ-C5400W
MOSFET 50W×4
TILT
OPEN
DIM
MENU
TUNE
BAND
DISP
DISC/FOLDER
SCROLL
RANDOM
SCAN
REPEAT
1
2
3
4
5
6

(CQ-C5400W)

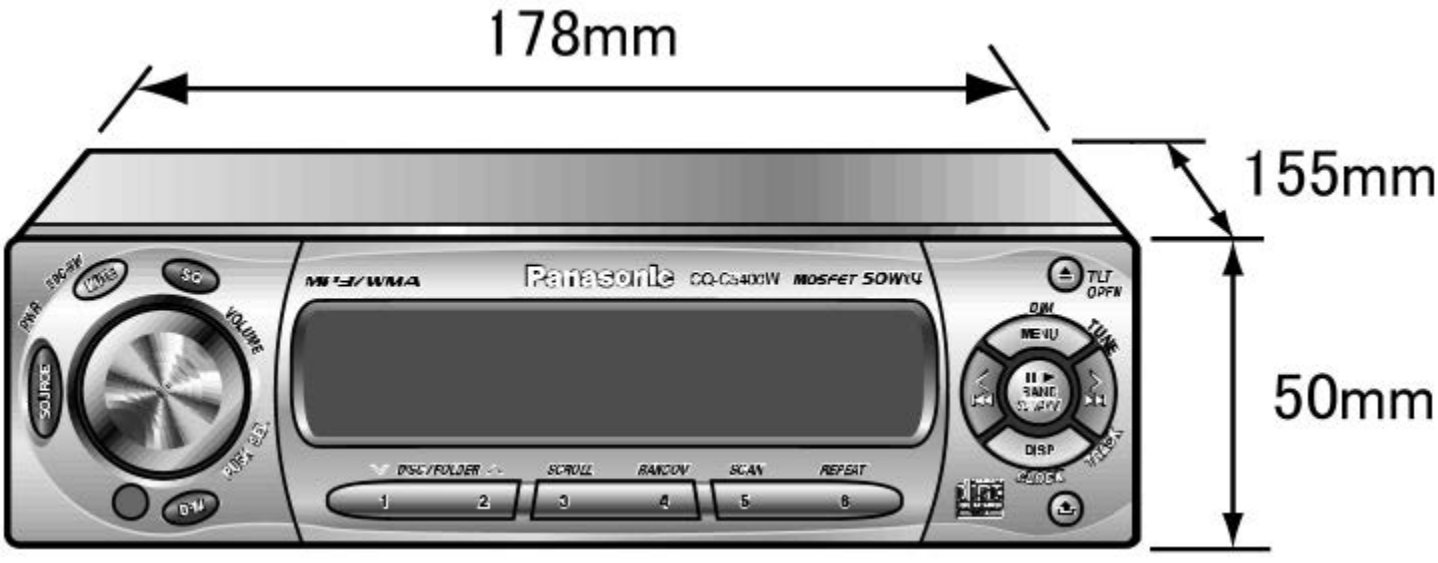
178mm
155mm
50mm
Panasonic
CQ-C3400W
MOSFET 50W×4
MP3/WMA
SQ
VOLUME
SOURCE
DIM
TUNE
MENU
BAND
DISP
TILT OPEN
DISC/FOLDER
SCROLL
RANDOM
SCAN
REPEAT
1
2
3
4
5
6

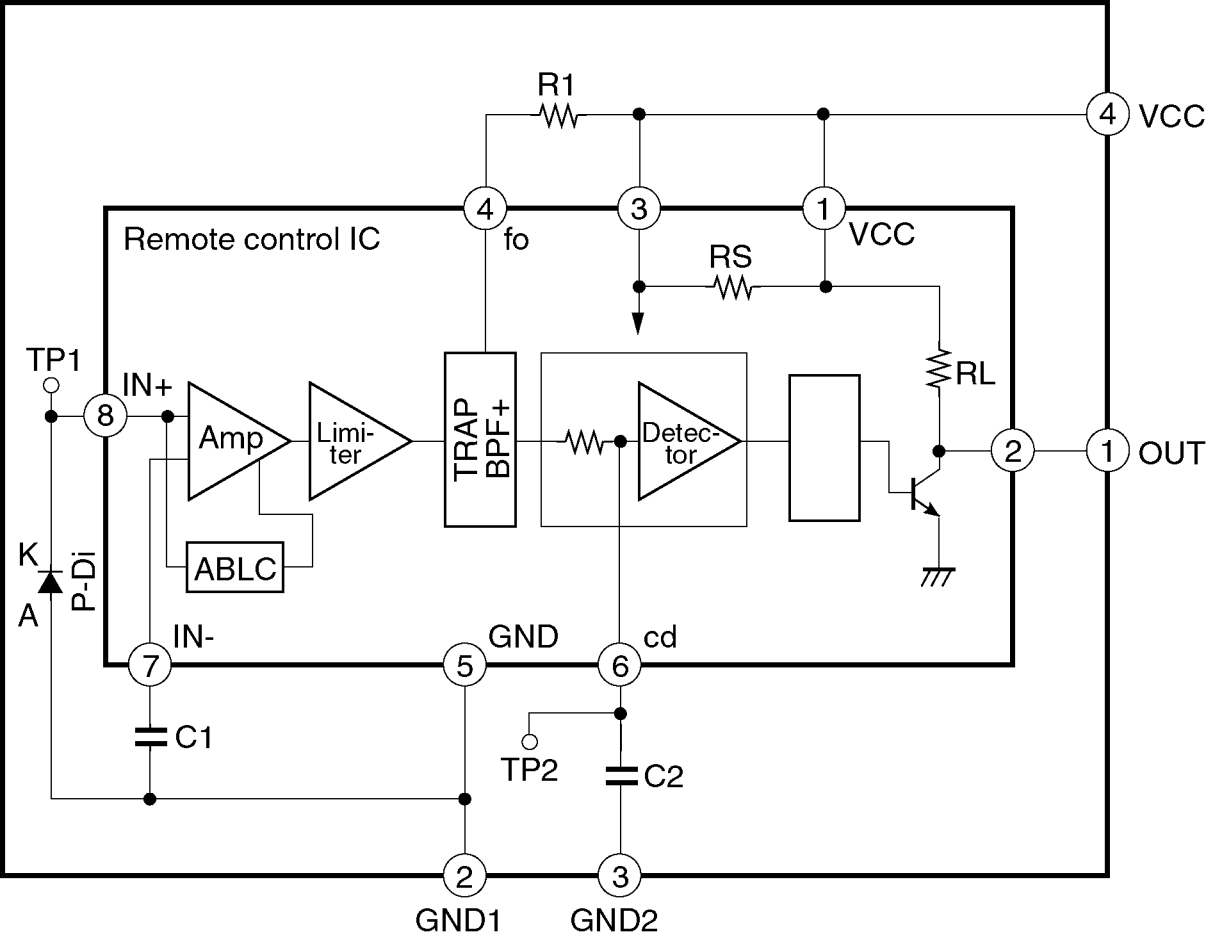
R1
4
VCC
Remote control IC
4
fo
3
1
VCC
RS
TP1
IN+
8
Amp
Limi-
ter
TRAP
BPF+
Detec-
tor
RL
2
1
OUT
K
P-Di
A
ABLC
IN-
GND
cd
7
5
6
C1
TP2
C2
2
3
GND1
GND2

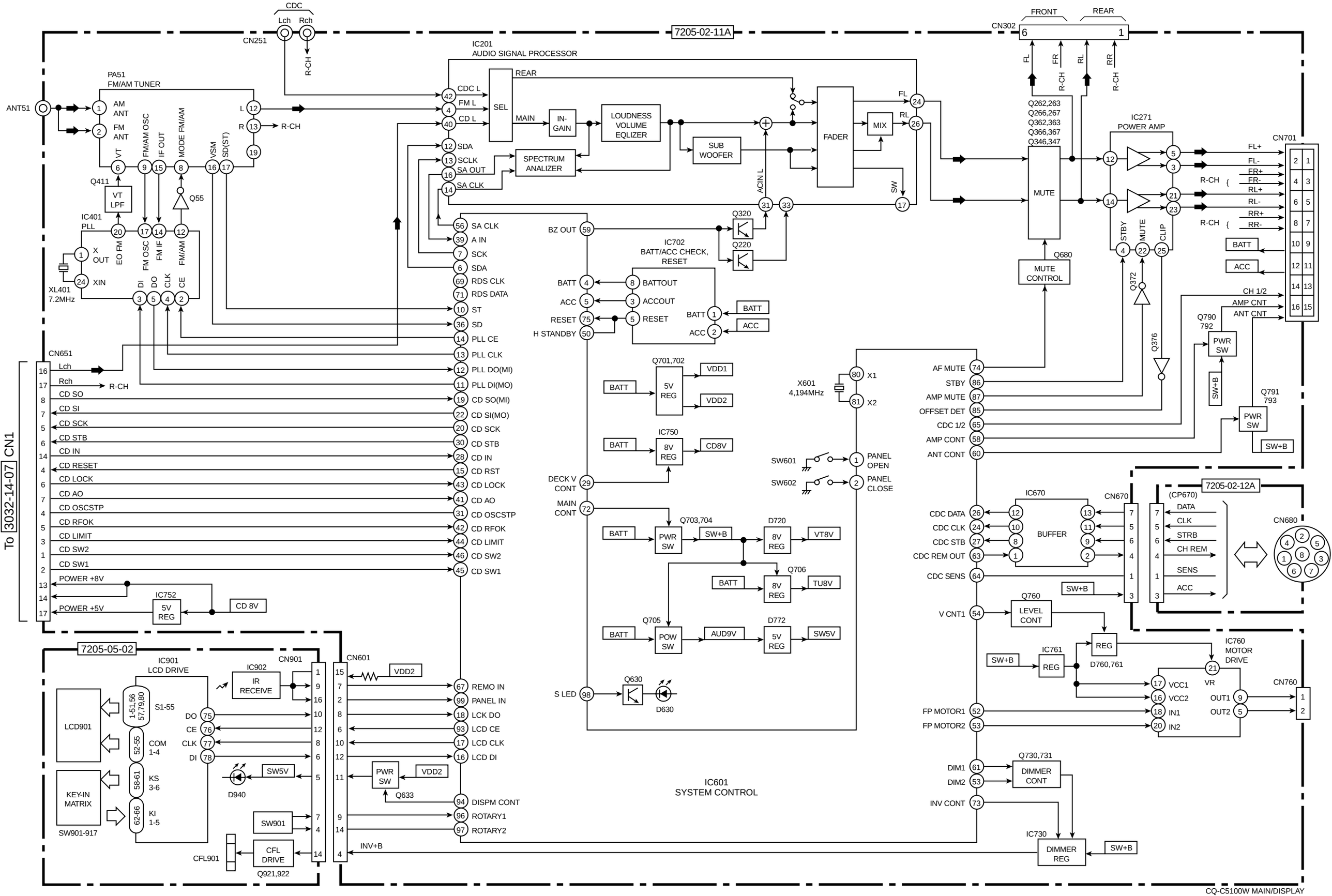
7205-02-11A
CDC
Lch
Rch
CN251
R-CH
IC201
AUDIO SIGNAL PROCESSOR
PA51
FM/AM TUNER
ANT51
AM ANT
FM ANT
VT
FM/AM OSC
IF OUT
MODE FM/AM
VSM
SD(ST)
Q411
VT LPF
Q55
IC401
PLL
X OUT
XIN
XL401
7.2MHz
EO FM
FM OSC
FM IF
FM/AM
DI
DO
CLK
CE
CDC L
FM L
CD L
SDA
SCLK
SA OUT
SA CLK
SEL
REAR
MAIN
IN-GAIN
LOUDNESS VOLUME EQLIZER
SUB WOOFER
SPECTRUM ANALIZER
FADER
MIX
ACIN L
SW
FL
RL
SA CLK
A IN
SCK
SDA
RDS CLK
RDS DATA
ST
SD
PLL CE
PLL CLK
PLL DO(MI)
PLL DI(MO)
CD SO(MI)
CD SI(MO)
CD SCK
CD STB
CD IN
CD RST
CD LOCK
CD AO
CD OSCSTP
CD RFOK
CD LIMIT
CD SW2
CD SW1
BZ OUT
Q320
Q220
IC702
BATT/ACC CHECK, RESET
BATTOUT
ACCOUT
RESET
H STANDBY
BATT
ACC
Q701,702
5V REG
VDD1
VDD2
IC750
8V REG
CD8V
DECK V CONT
MAIN CONT
Q703,704
PWR SW
SW+B
D720
VT8V
Q706
TU8V
Q705
POW SW
AUD9V
D772
SW5V
S LED
Q630
D630
CN651
To 3032-14-07 CN1
Lch
Rch
CD SO
CD SI
CD SCK
CD STB
CD IN
CD RESET
CD LOCK
CD AO
CD OSCSTP
CD RFOK
CD LIMIT
CD SW2
CD SW1
POWER +8V
POWER +5V
IC752
5V REG
CD 8V
7205-05-02
IC901
LCD DRIVE
CN901
IC902
IR RECEIVE
LCD901
KEY-IN MATRIX
SW901-917
S1-55
COM 1-4
KS 3-6
KI 1-5
DO
CE
CLK
DI
D940
SW901
CFL DRIVE
CFL901
Q921,922
CN601
VDD2
REMO IN
PANEL IN
LCK DO
LCD CE
LCD CLK
LCD DI
PWR SW
Q633
DISPM CONT
ROTARY1
ROTARY2
INV+B
IC601
SYSTEM CONTROL
X601
4,194MHz
X1
X2
SW601
SW602
PANEL OPEN
PANEL CLOSE
AF MUTE
STBY
AMP MUTE
OFFSET DET
CDC 1/2
AMP CONT
ANT CONT
CDC DATA
CDC CLK
CDC STB
CDC REM OUT
CDC SENS
V CNT1
FP MOTOR1
FP MOTOR2
DIM1
DIM2
INV CONT
IC670
BUFFER
CN670
Q760
LEVEL CONT
REG
IC761
D760,761
IC760
MOTOR DRIVE
VCC1
VCC2
IN1
IN2
VR
OUT1
OUT2
CN760
Q730,731
DIMMER CONT
IC730
DIMMER REG
CN302
FRONT
REAR
Q262,263
Q266,267
Q362,363
Q366,367
Q346,347
IC271
POWER AMP
MUTE
Q680
MUTE CONTROL
Q372
Q376
CN701
FL+
FL-
FR+
FR-
RL+
RL-
RR+
RR-
R-CH
BATT
ACC
CH 1/2
AMP CNT
ANT CNT
Q790
792
Q791
793
7205-02-12A
(CP670)
DATA
CLK
STRB
CH REM
SENS
ACC
CN680

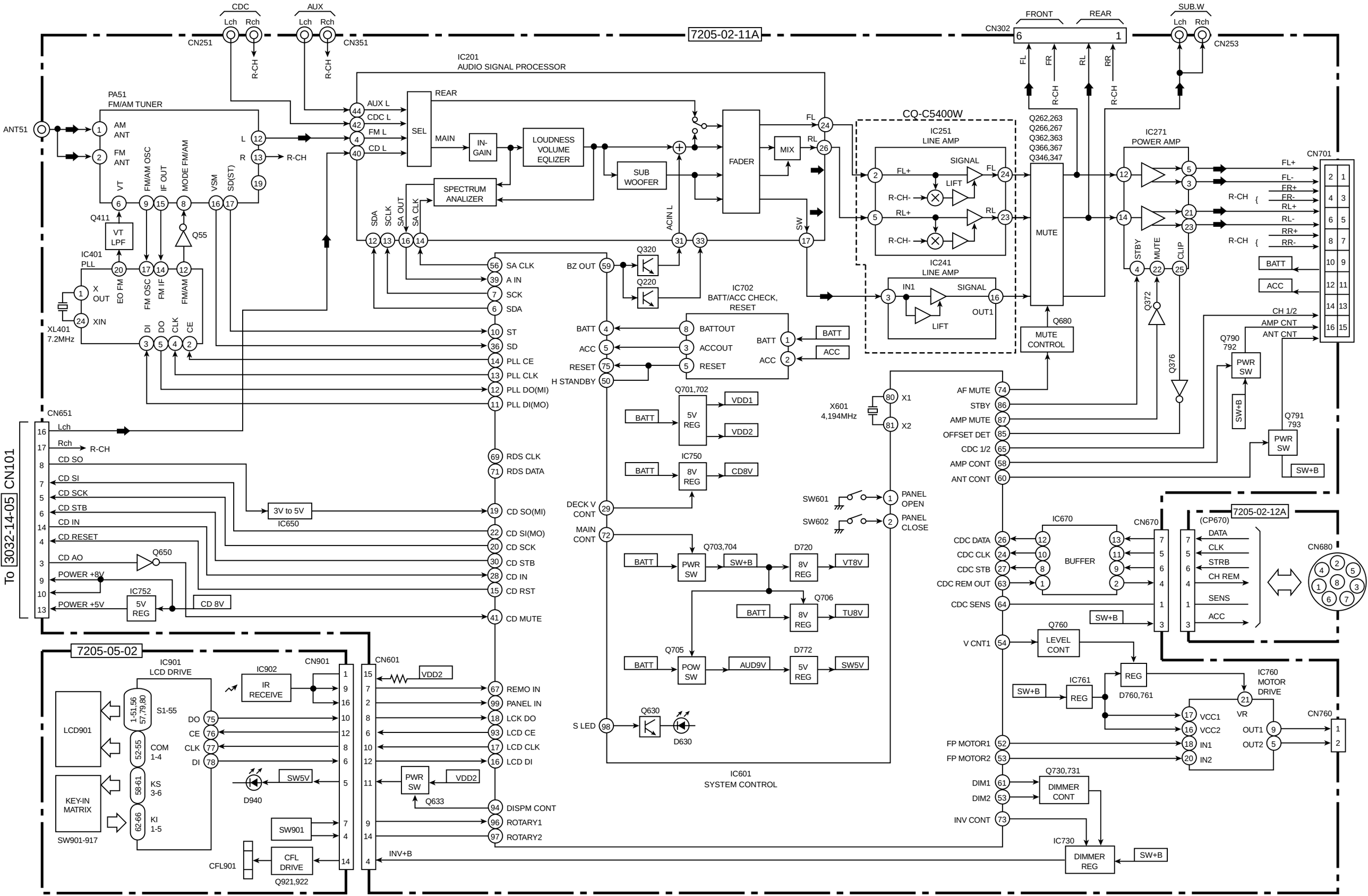
7205-02-11A
CDC
AUX
Lch
Rch
CN251
CN351
R-CH
IC201
AUDIO SIGNAL PROCESSOR
PA51
FM/AM TUNER
ANT51
AM ANT
FM ANT
AUX L
CDC L
FM L
CD L
SEL
REAR
MAIN
IN-GAIN
LOUDNESS VOLUME EQLIZER
SUB WOOFER
SPECTRUM ANALIZER
FADER
MIX
FL
RL
SW
ACIN L
SDA
SCLK
SA OUT
SA CLK
VT
FM/AM OSC
IF OUT
MODE FM/AM
VSM
SD(ST)
Q411
VT LPF
Q55
IC401
PLL
X OUT
XIN
XL401
7.2MHz
EO FM
FM OSC
FM IF
FM/AM
DI
DO
CLK
CE
SA CLK
A IN
SCK
SDA
ST
SD
PLL CE
PLL CLK
PLL DO(MI)
PLL DI(MO)
BZ OUT
Q320
Q220
IC702
BATT/ACC CHECK, RESET
BATTOUT
ACCOUT
RESET
H STANDBY
Q701,702
5V REG
VDD1
VDD2
IC750
8V REG
CD8V
DECK V CONT
MAIN CONT
Q703,704
PWR SW
SW+B
D720
VT8V
Q706
TU8V
Q705
POW SW
AUD9V
D772
SW5V
S LED
Q630
D630
IC601
SYSTEM CONTROL
CN651
CN101
To 3032-14-05
CD SO
CD SI
CD SCK
CD STB
CD IN
CD RESET
CD AO
POWER +8V
POWER +5V
3V to 5V
IC650
Q650
IC752
CD 8V
CD SO(MI)
CD SI(MO)
CD SCK
CD STB
CD IN
CD RST
CD MUTE
RDS CLK
RDS DATA
REMO IN
PANEL IN
LCK DO
LCD CE
LCD CLK
LCD DI
DISPM CONT
ROTARY1
ROTARY2
INV+B
7205-05-02
IC901
LCD DRIVE
IC902
IR RECEIVE
CN901
CN601
LCD901
KEY-IN MATRIX
SW901-917
S1-55
COM 1-4
KS 3-6
KI 1-5
1-51,56 57,79,80
52-55
58-61
62-66
DO
CE
CLK
DI
D940
SW5V
SW901
CFL DRIVE
CFL901
Q921,922
PWR SW
Q633
CN302
FRONT
REAR
SUB.W
CN253
CQ-C5400W
IC251
LINE AMP
SIGNAL
LIFT
FL+
RL+
R-CH-
IC241
LINE AMP
IN1
OUT1
Q262,263
Q266,267
Q362,363
Q366,367
Q346,347
MUTE
Q680
MUTE CONTROL
IC271
POWER AMP
STBY
MUTE
CLIP
Q372
Q376
CN701
FL+
FL-
FR+
FR-
RL+
RL-
RR+
RR-
BATT
ACC
CH 1/2
AMP CNT
ANT CNT
Q790
792
Q791
793
PWR SW
SW+B
X601
4,194MHz
X1
X2
AF MUTE
STBY
AMP MUTE
OFFSET DET
CDC 1/2
AMP CONT
ANT CONT
SW601
SW602
PANEL OPEN
PANEL CLOSE
IC670
BUFFER
CN670
CDC DATA
CDC CLK
CDC STB
CDC REM OUT
CDC SENS
V CNT1
Q760
LEVEL CONT
7205-02-12A
(CP670)
DATA
CLK
STRB
CH REM
SENS
ACC
CN680
IC761
REG
D760,761
IC760
MOTOR DRIVE
VR
VCC1
VCC2
IN1
IN2
OUT1
OUT2
CN760
FP MOTOR1
FP MOTOR2
DIM1
DIM2
INV CONT
Q730,731
DIMMER CONT
IC730
DIMMER REG

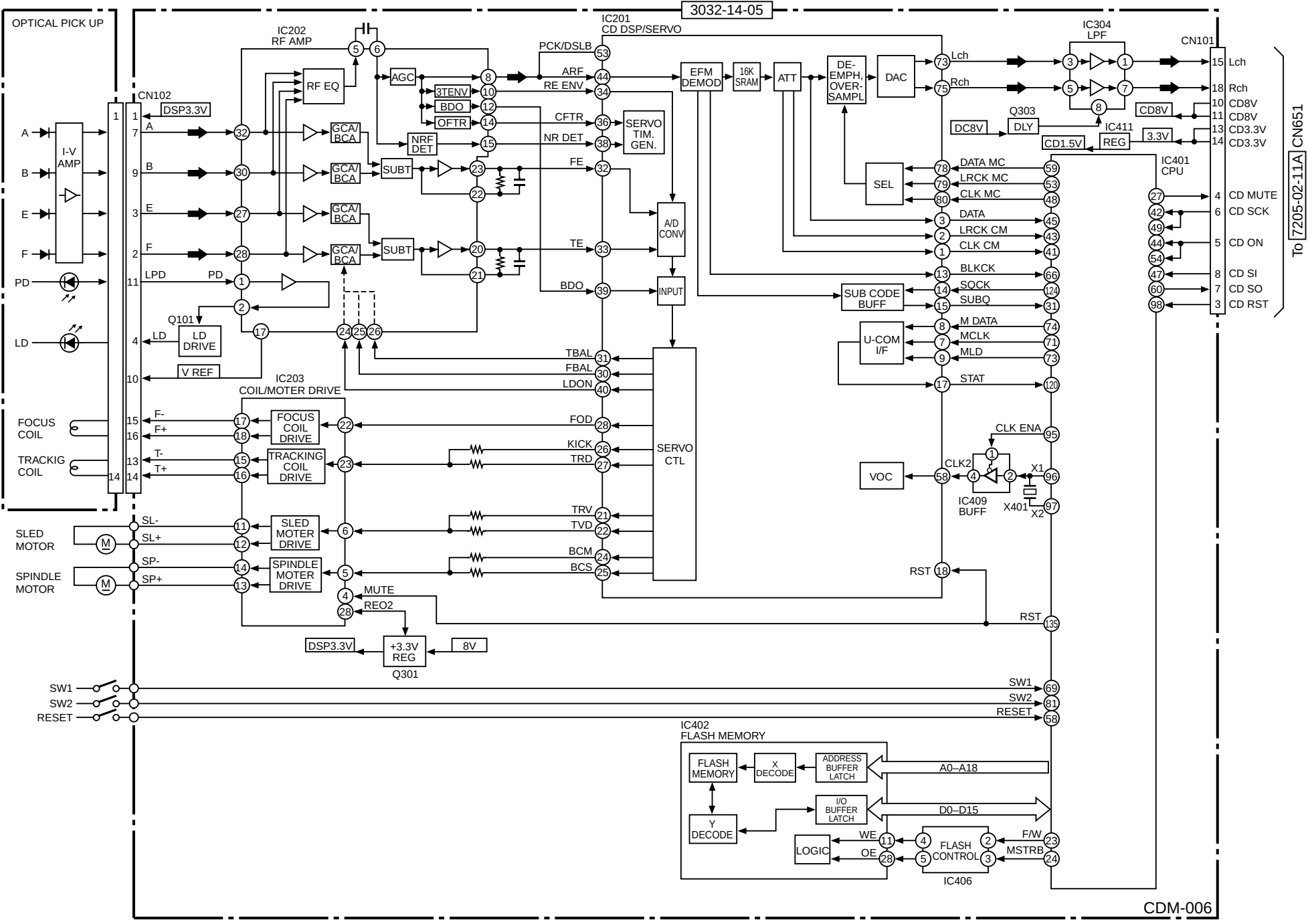
3032-14-05
OPTICAL PICK UP
IC202
RF AMP
IC201
CD DSP/SERVO
IC304
LPF
CN101
CN102
DSP3.3V
RF EQ
AGC
3TENV
BDO
OFTR
NRF DET
GCA/BCA
SUBT
PCK/DSLB
ARF
RE ENV
CFTR
NR DET
FE
TE
BDO
SERVO TIM. GEN.
EFM DEMOD
16K SRAM
ATT
DE-EMPH, OVER-SAMPL
DAC
Lch
Rch
Q303
DLY
DC8V
CD8V
IC411
REG
CD1.5V
3.3V
CD3.3V
CN651
To 7205-02-11A
IC401
CPU
CD MUTE
CD SCK
CD ON
CD SI
CD SO
CD RST
DATA MC
LRCK MC
CLK MC
DATA
LRCK CM
CLK CM
BLKCK
SOCK
SUBQ
M DATA
MCLK
MLD
STAT
SEL
SUB CODE BUFF
U-COM I/F
A/D CONV
INPUT
SERVO CTL
TBAL
FBAL
LDON
FOD
KICK
TRD
TRV
TVD
BCM
BCS
RST
CLK ENA
CLK2
VOC
IC409 BUFF
X1
X401
X2
I-V AMP
A
B
E
F
PD
LD
LPD
Q101
LD DRIVE
V REF
IC203
COIL/MOTER DRIVE
FOCUS COIL
TRACKIG COIL
F-
F+
T-
T+
FOCUS COIL DRIVE
TRACKING COIL DRIVE
SLED MOTOR
SPINDLE MOTOR
SL-
SL+
SP-
SP+
SLED MOTER DRIVE
SPINDLE MOTER DRIVE
MUTE
REO2
DSP3.3V
+3.3V REG
Q301
8V
SW1
SW2
RESET
IC402
FLASH MEMORY
FLASH MEMORY
X DECODE
ADDRESS BUFFER LATCH
A0–A18
I/O BUFFER LATCH
D0–D15
Y DECODE
LOGIC
WE
OE
FLASH CONTROL
F/W
MSTRB
IC406
CDM-006

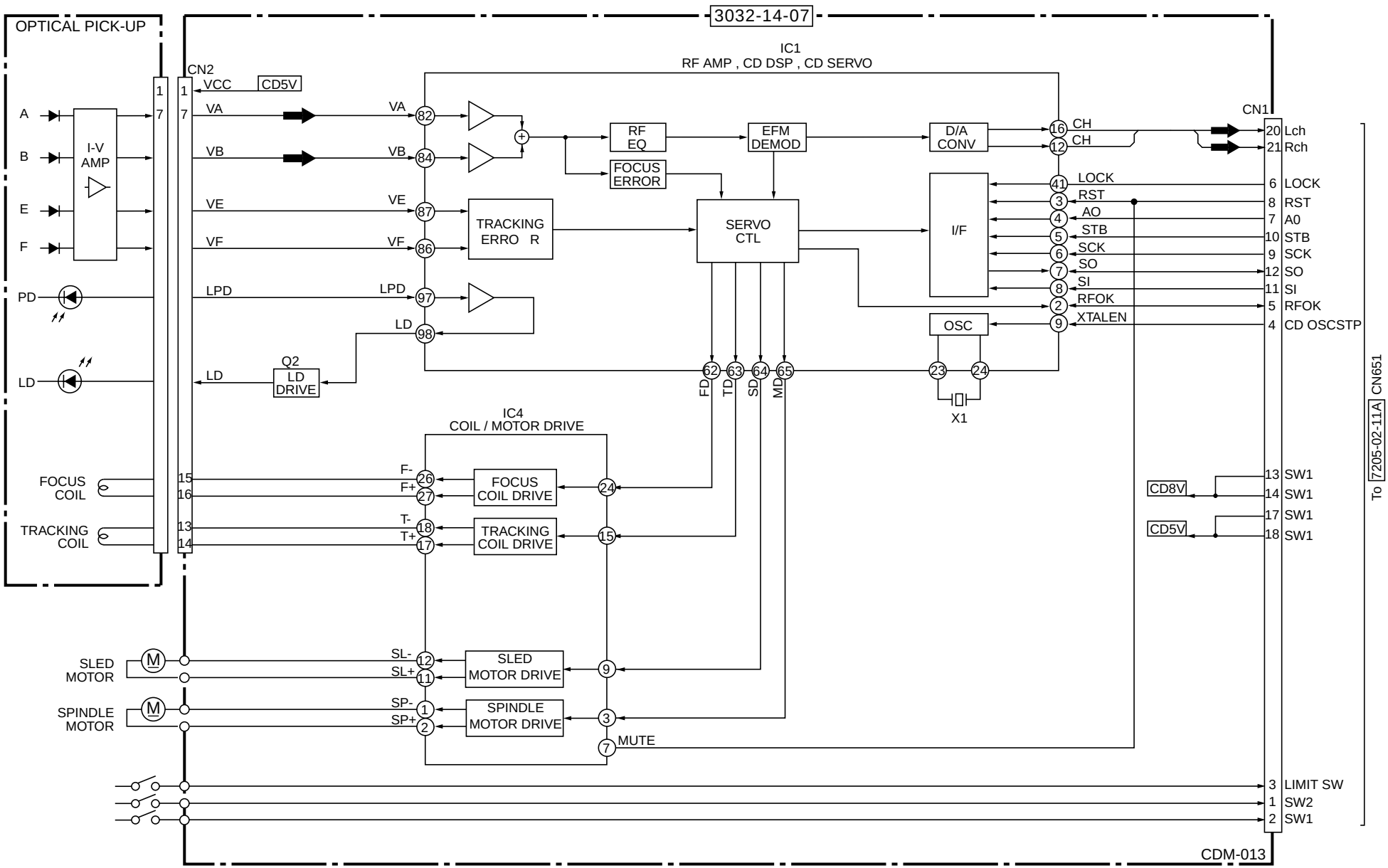

CQ-C5100W CD Deck

Printed in Japan 2004.3 (K) (Recycled Paper)

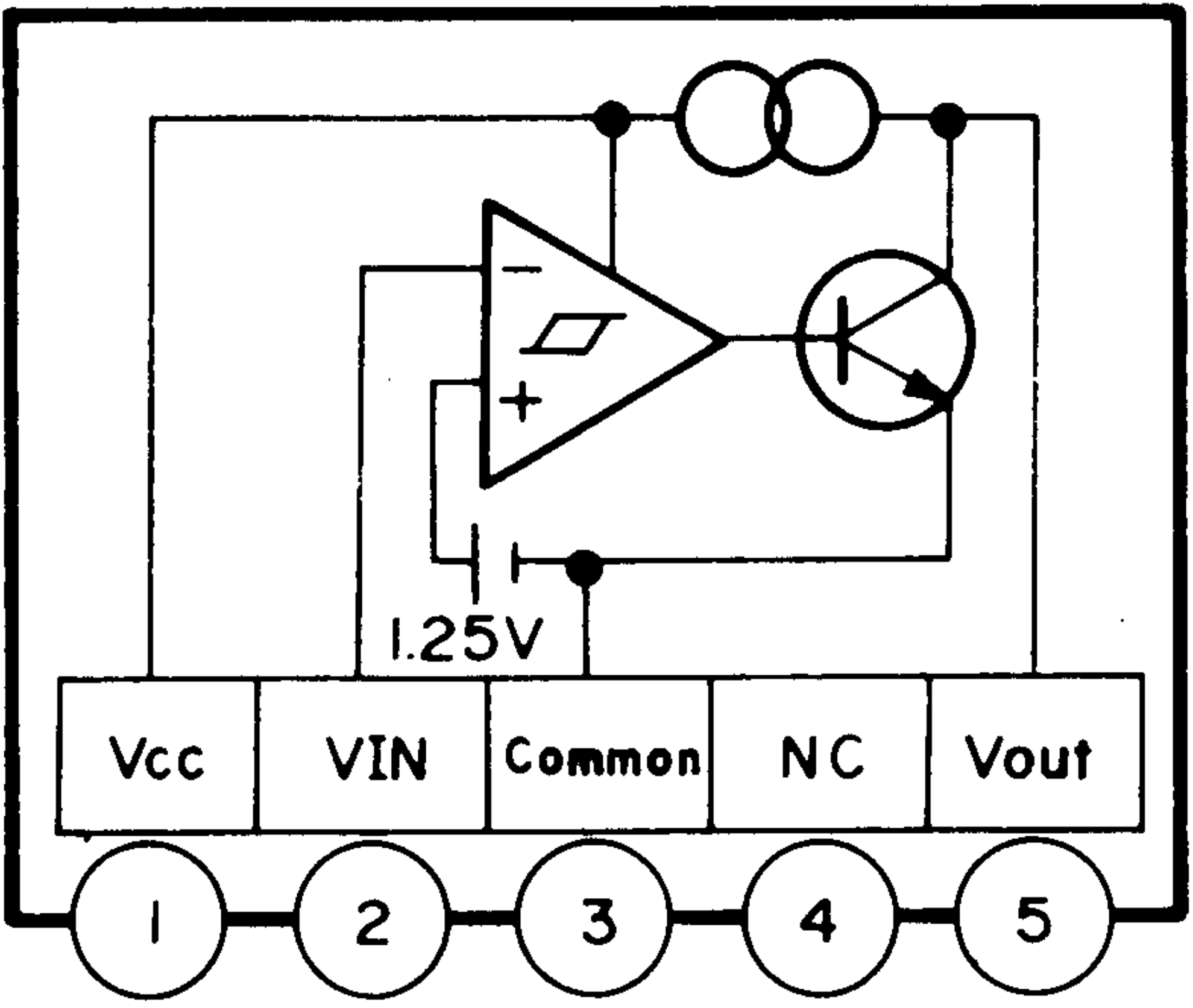
1.25V
Vcc
VIN
Common
NC
Vout
1
2
3
4
5

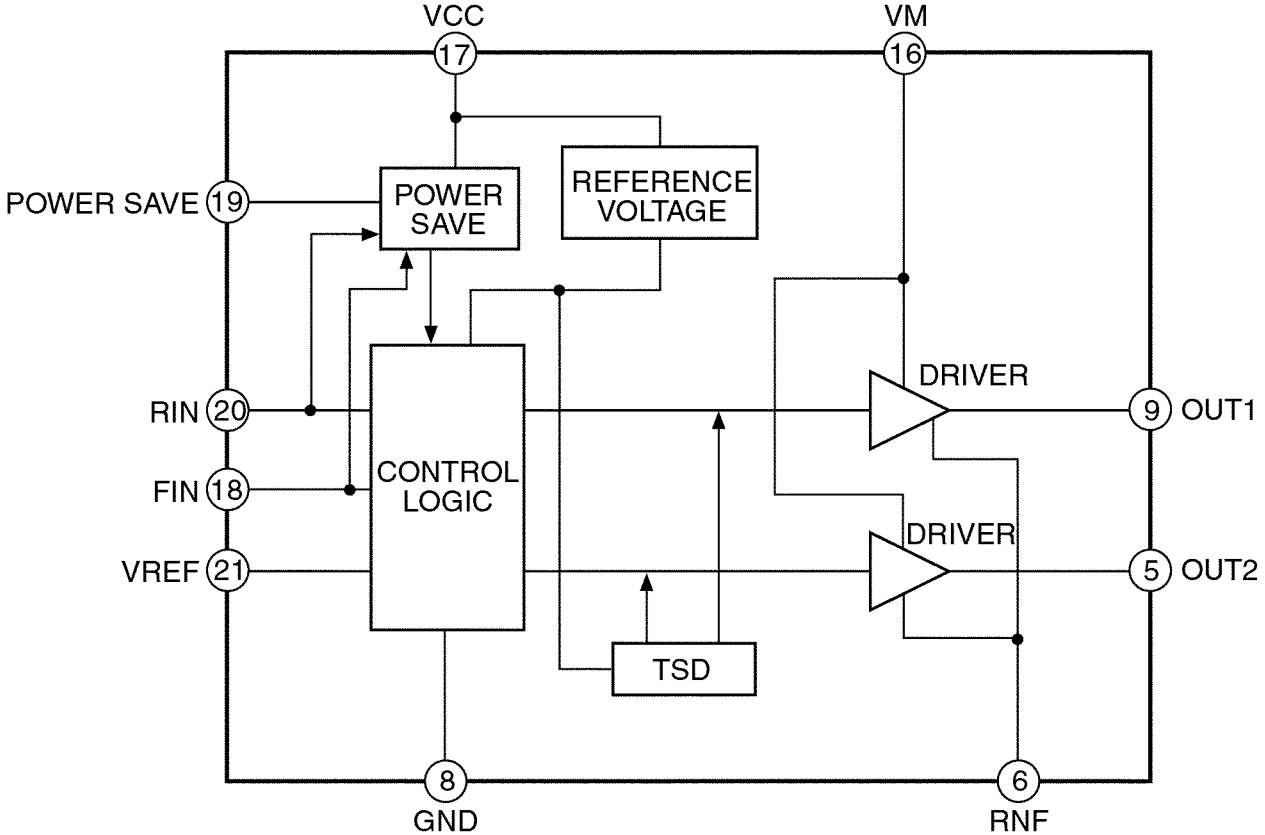
VCC
17
VM
16
POWER SAVE
19
POWER SAVE
REFERENCE VOLTAGE
RIN
20
FIN
18
VREF
21
CONTROL LOGIC
DRIVER
DRIVER
9
OUT1
5
OUT2
TSD
8
GND
6
RNF

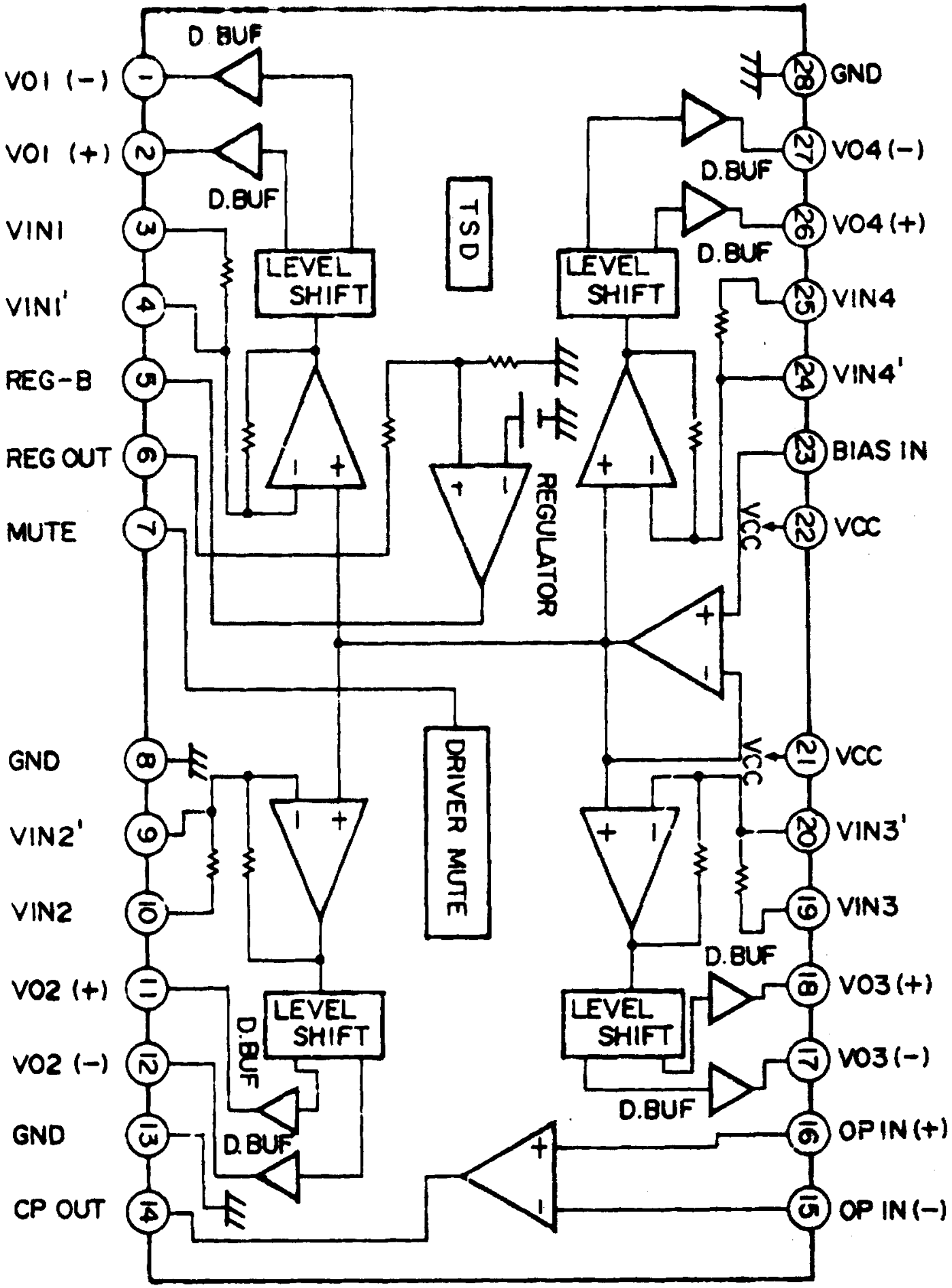
VO1 (−)
VO1 (+)
VIN1
VIN1'
REG-B
REG OUT
MUTE
GND
VIN2'
VIN2
VO2 (+)
VO2 (−)
GND
CP OUT
GND
VO4 (−)
VO4 (+)
VIN4
VIN4'
BIAS IN
VCC
VCC
VIN3'
VIN3
VO3 (+)
VO3 (−)
OP IN (+)
OP IN (−)
D. BUF
D.BUF
LEVEL SHIFT
TSD
REGULATOR
DRIVER MUTE

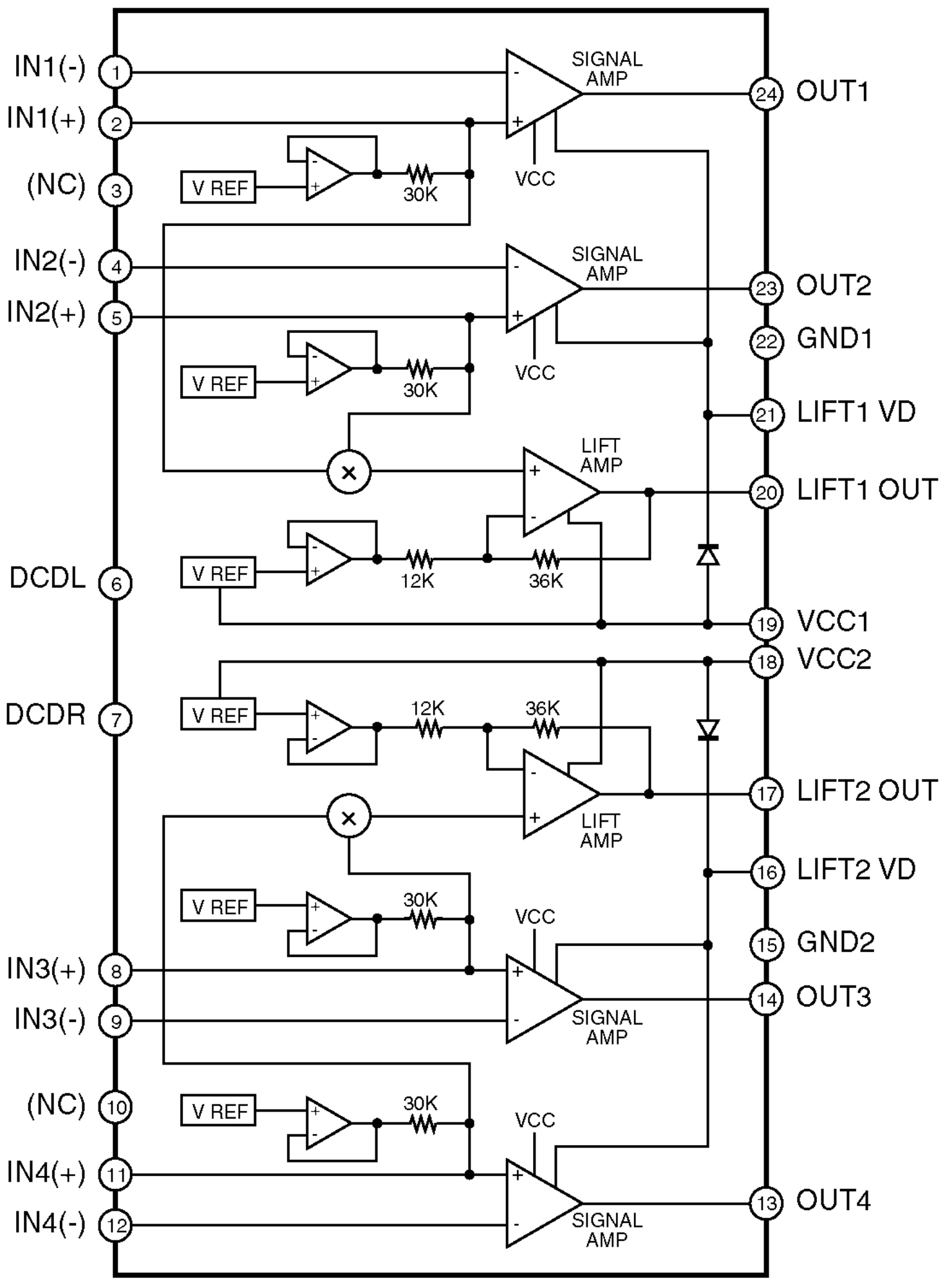
IN1(-)
1
IN1(+)
2
(NC)
3
IN2(-)
4
IN2(+)
5
DCDL
6
DCDR
7
IN3(+)
8
IN3(-)
9
(NC)
10
IN4(+)
11
IN4(-)
12
SIGNAL AMP
VCC
V REF
30K
LIFT AMP
12K
36K
24
OUT1
23
OUT2
22
GND1
21
LIFT1 VD
20
LIFT1 OUT
19
VCC1
18
VCC2
17
LIFT2 OUT
16
LIFT2 VD
15
GND2
14
OUT3
13
OUT4

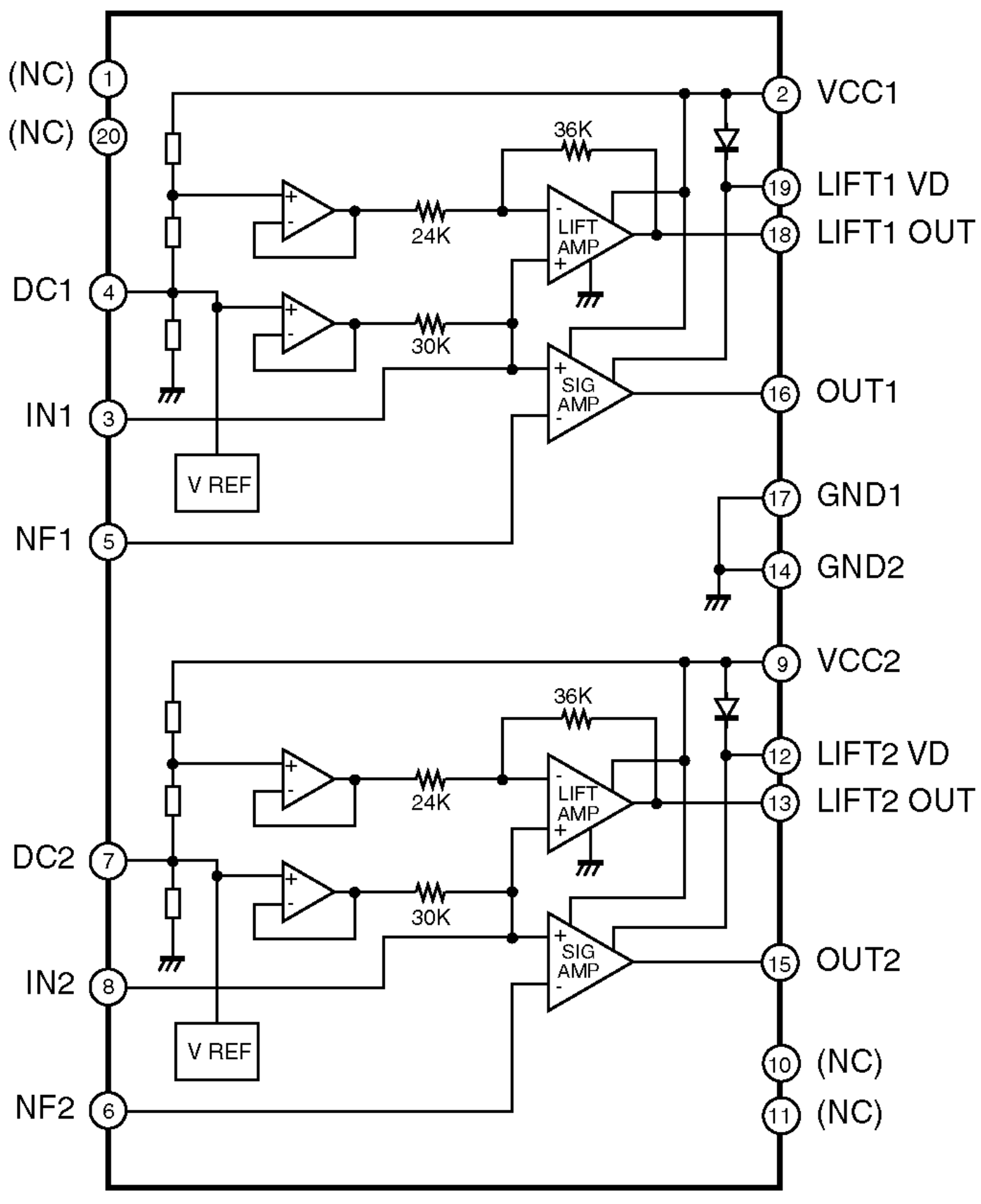
(NC) 1
(NC) 20
DC1 4
IN1 3
NF1 5
DC2 7
IN2 8
NF2 6
2 VCC1
19 LIFT1 VD
18 LIFT1 OUT
16 OUT1
17 GND1
14 GND2
9 VCC2
12 LIFT2 VD
13 LIFT2 OUT
15 OUT2
10 (NC)
11 (NC)
36K
24K
30K
LIFT AMP
SIG AMP
V REF
36K
24K
30K
LIFT AMP
SIG AMP
V REF

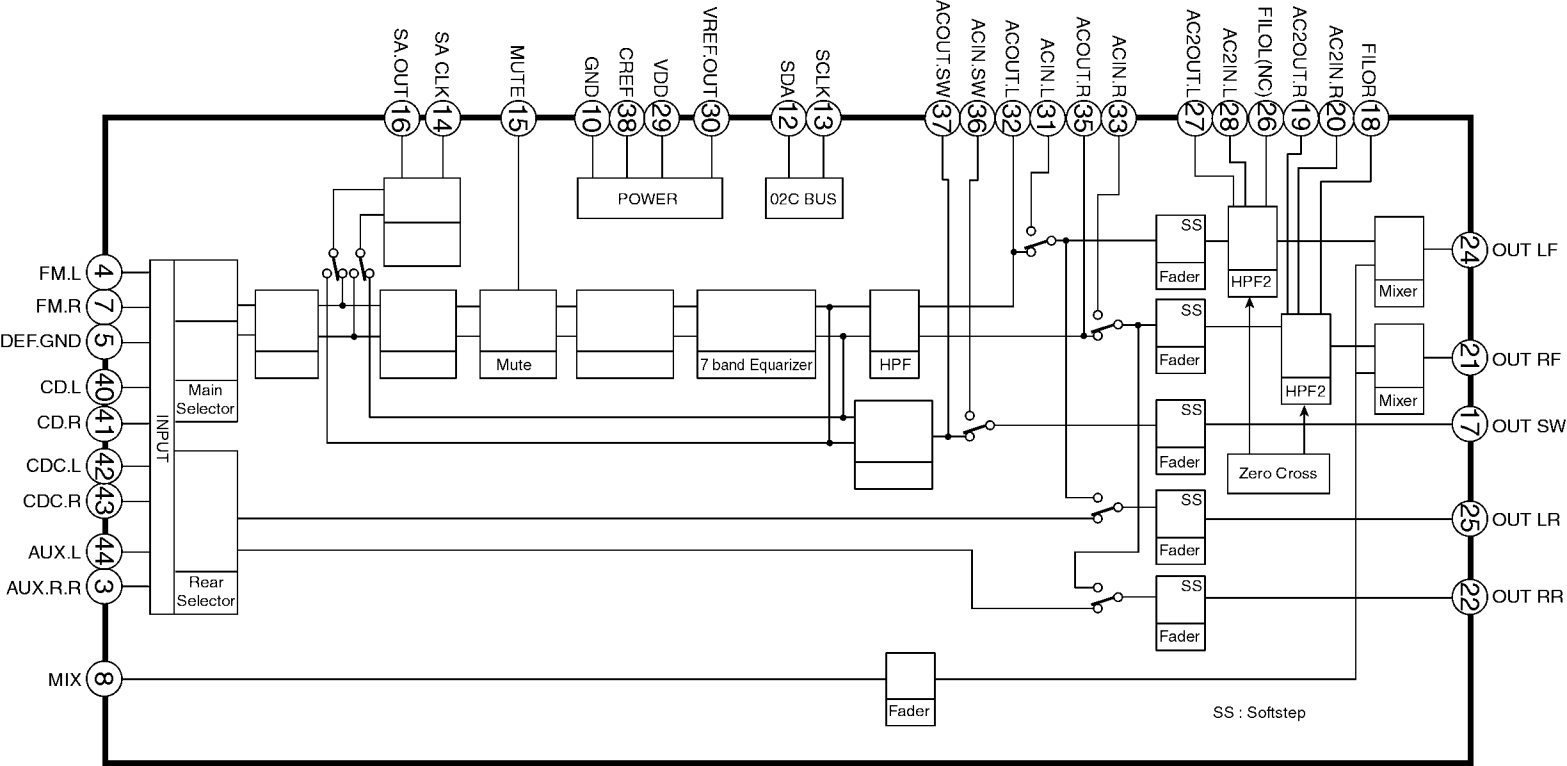
SA.OUT 16
SA CLK 14
MUTE 15
GND 10
CREF 38
VDD 29
VREF.OUT 30
SDA 12
SCLK 13
ACOUT.SW 37
ACIN.SW 36
ACOUT.L 32
ACIN.L 31
ACOUT.R 35
ACIN.R 33
AC2OUT.L 27
AC2IN.L 28
FILOL(NC) 26
AC2OUT.R 19
AC2IN.R 20
FILOR 18
POWER
02C BUS
FM.L 4
FM.R 7
DEF.GND 5
CD.L 40
CD.R 41
CDC.L 42
CDC.R 43
AUX.L 44
AUX.R.R 3
MIX 8
INPUT
Main Selector
Rear Selector
Mute
7 band Equarizer
HPF
SS
Fader
HPF2
Zero Cross
Mixer
Fader
OUT LF 24
OUT RF 21
OUT SW 17
OUT LR 25
OUT RR 22
SS : Softstep

■ How to remove the Flexible PCB

1. Remove the Trim Plate.

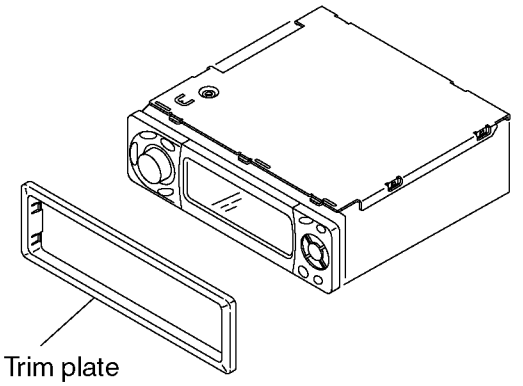

2. Remove the Removable Face Plate unit by pressing the Release Button.

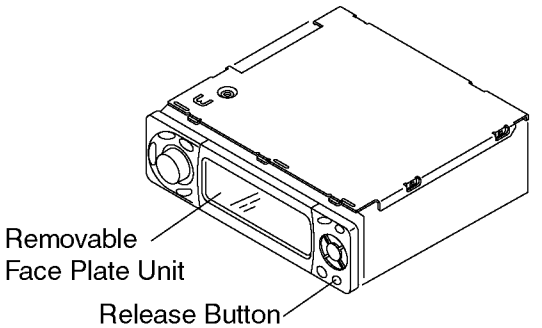

3. Remove the screw(☆) and remove the Top Cover.

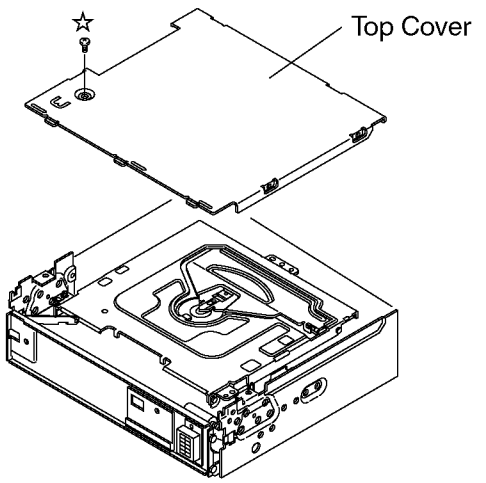

4. Remove the 3 screws(★) and remove the CD Deck.

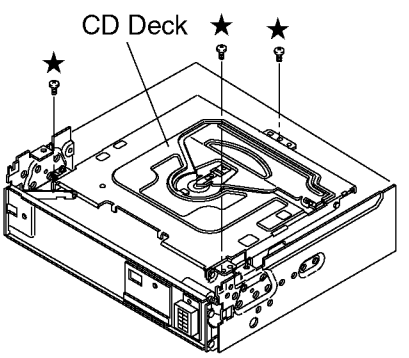

5. Remove the Flexible PCB from the CN601 (Main PCB).

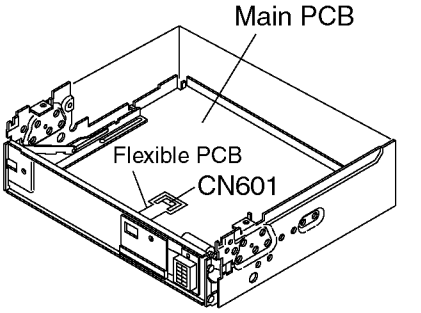

6. Remove the screw(◎) from the Drive Mechanism Ass'y and remove the Flexible PCB case.

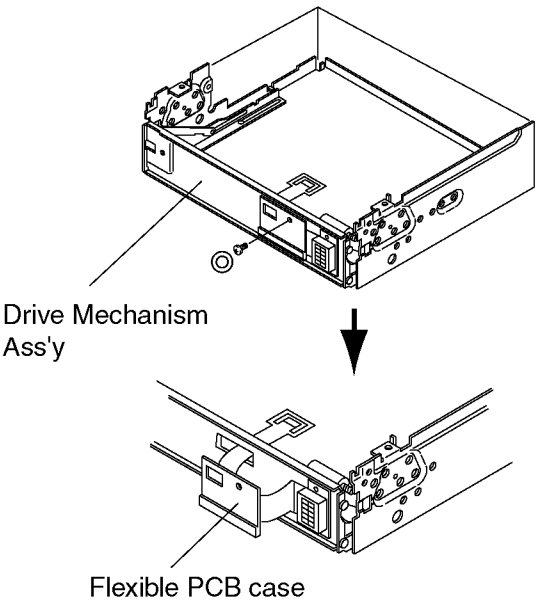

7. Remove the Flexible PCB from the Connector(16P).

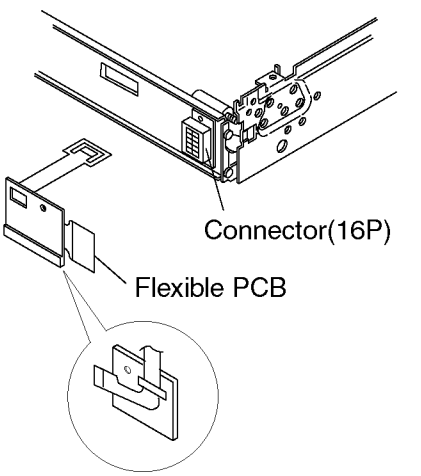

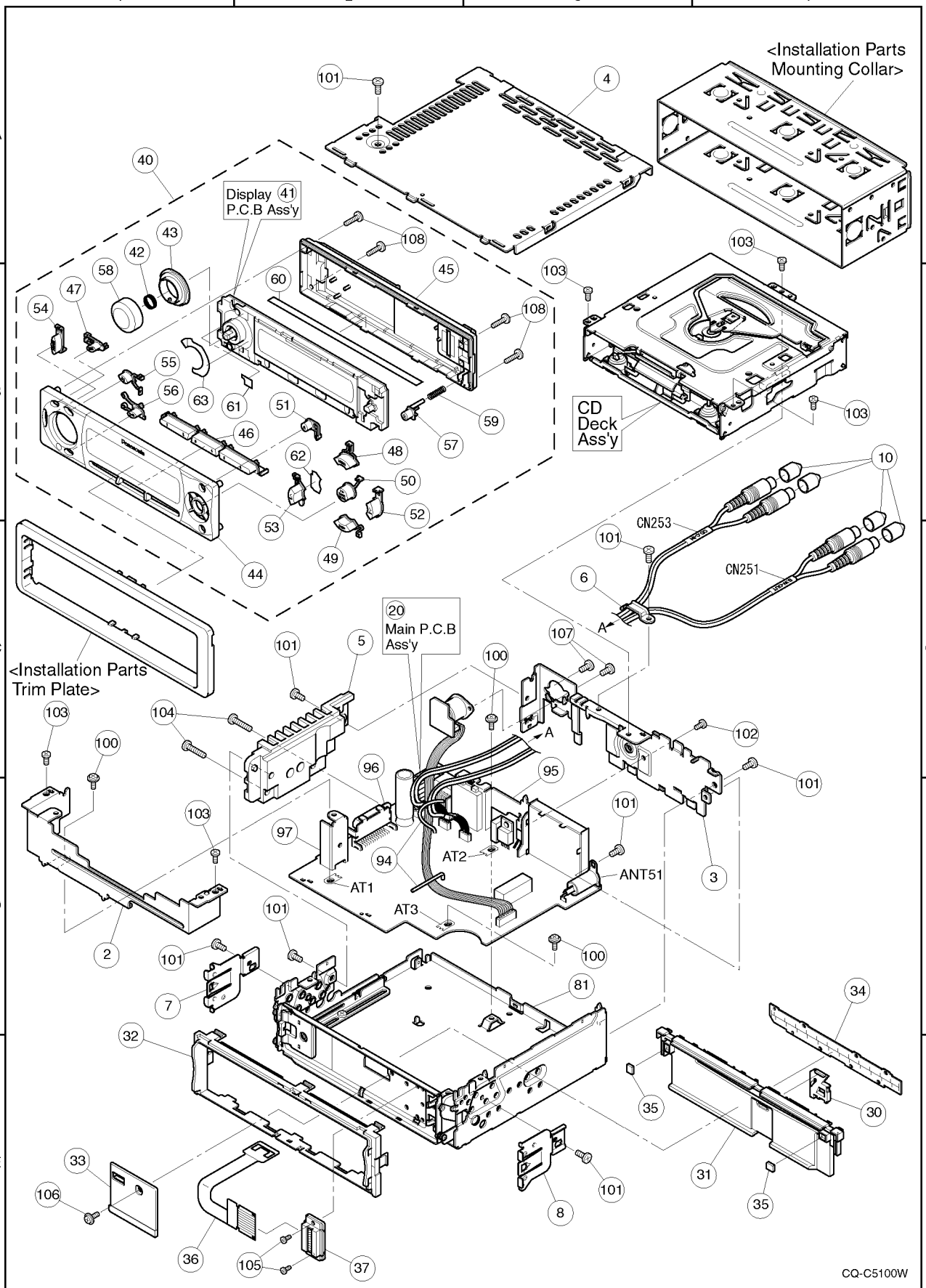
<Installation Parts Mounting Collar>
Display 41 P.C.B Ass'y
CD Deck Ass'y
20 Main P.C.B Ass'y
<Installation Parts Trim Plate>
CN253
CN251
AT1
AT2
AT3
ANT51
CQ-C5100W

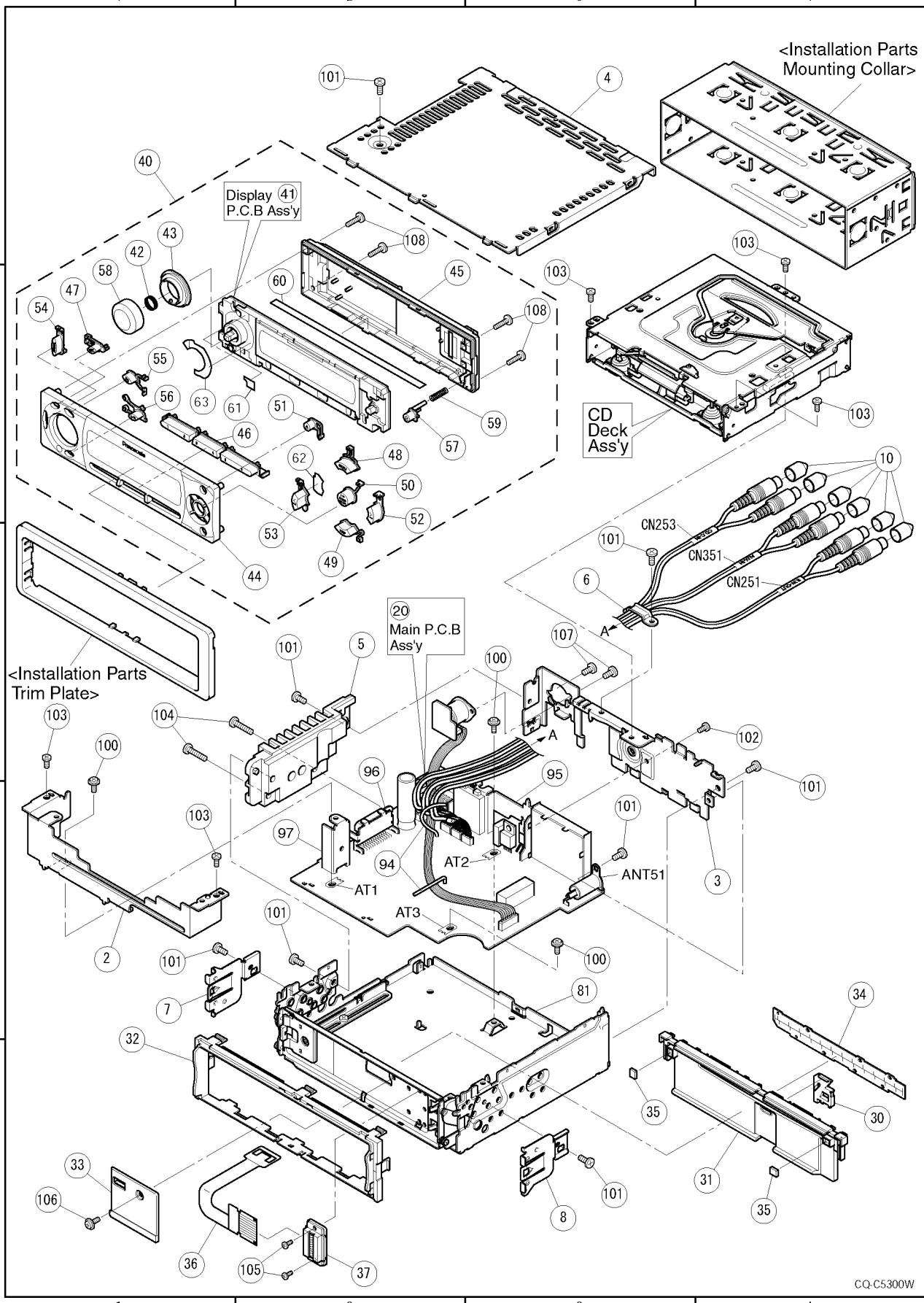
<Installation Parts Mounting Collar>
Display 41 P.C.B Ass'y
CD Deck Ass'y
20 Main P.C.B Ass'y
<Installation Parts Trim Plate>
CN253
CN351
CN251
AT1
AT2
AT3
ANT51
CQ-C5300W

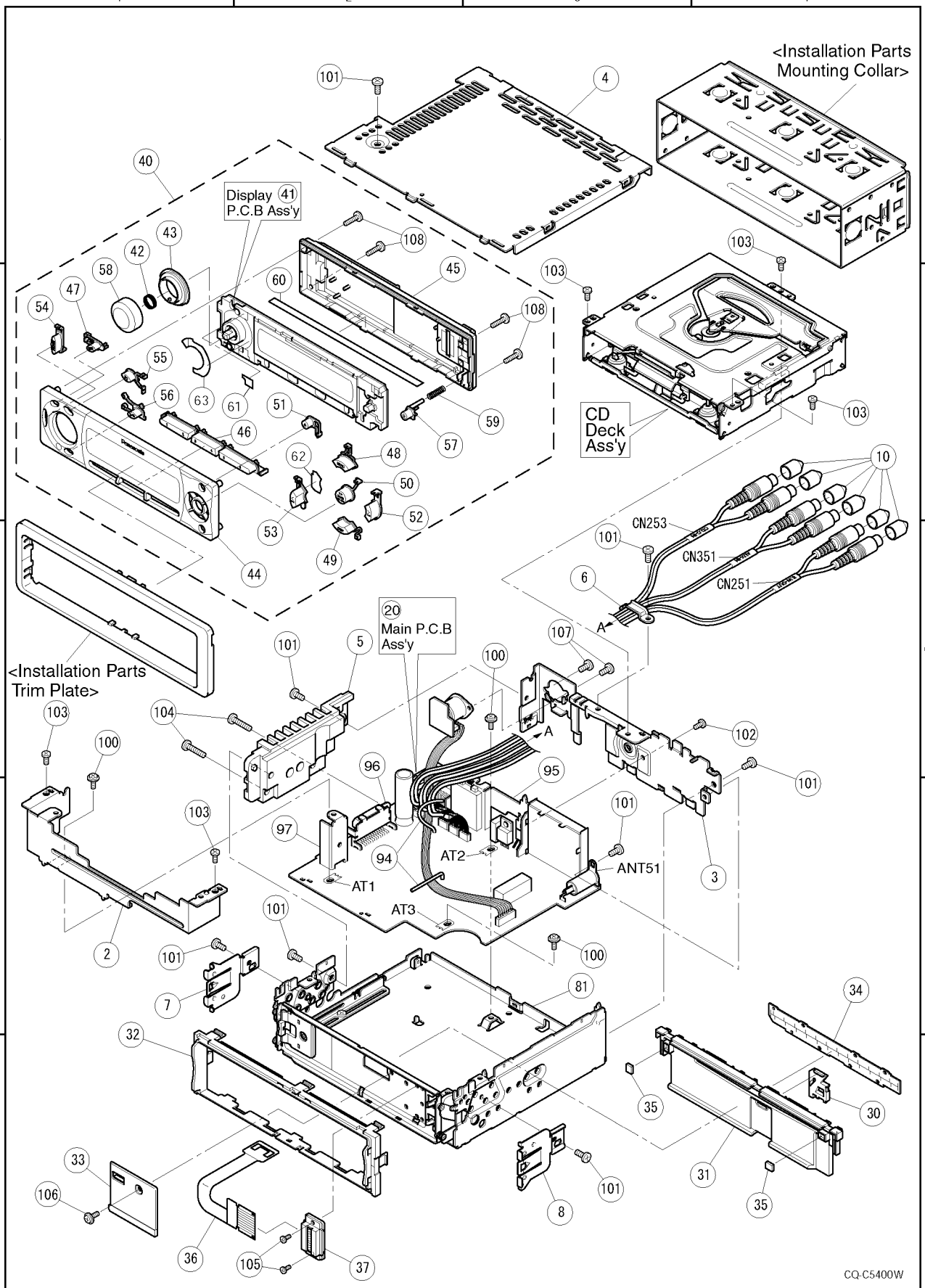
<Installation Parts Mounting Collar>
Display 41 P.C.B Ass'y
CD Deck Ass'y
CN253
CN351
CN251
20 Main P.C.B Ass'y
<Installation Parts Trim Plate>
AT1
AT2
AT3
ANT51
CQ-C5400W

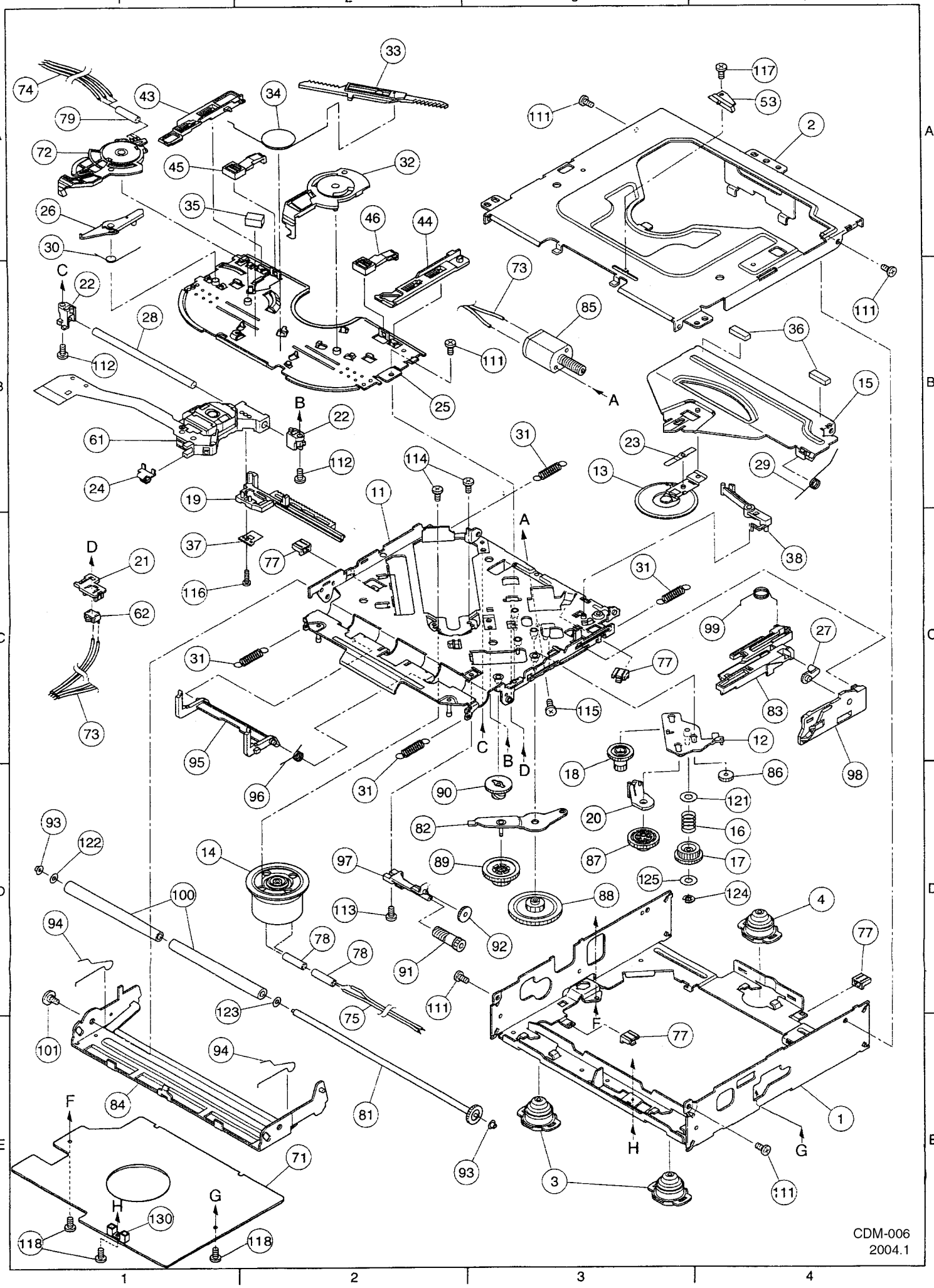
CDM-006
2004.1

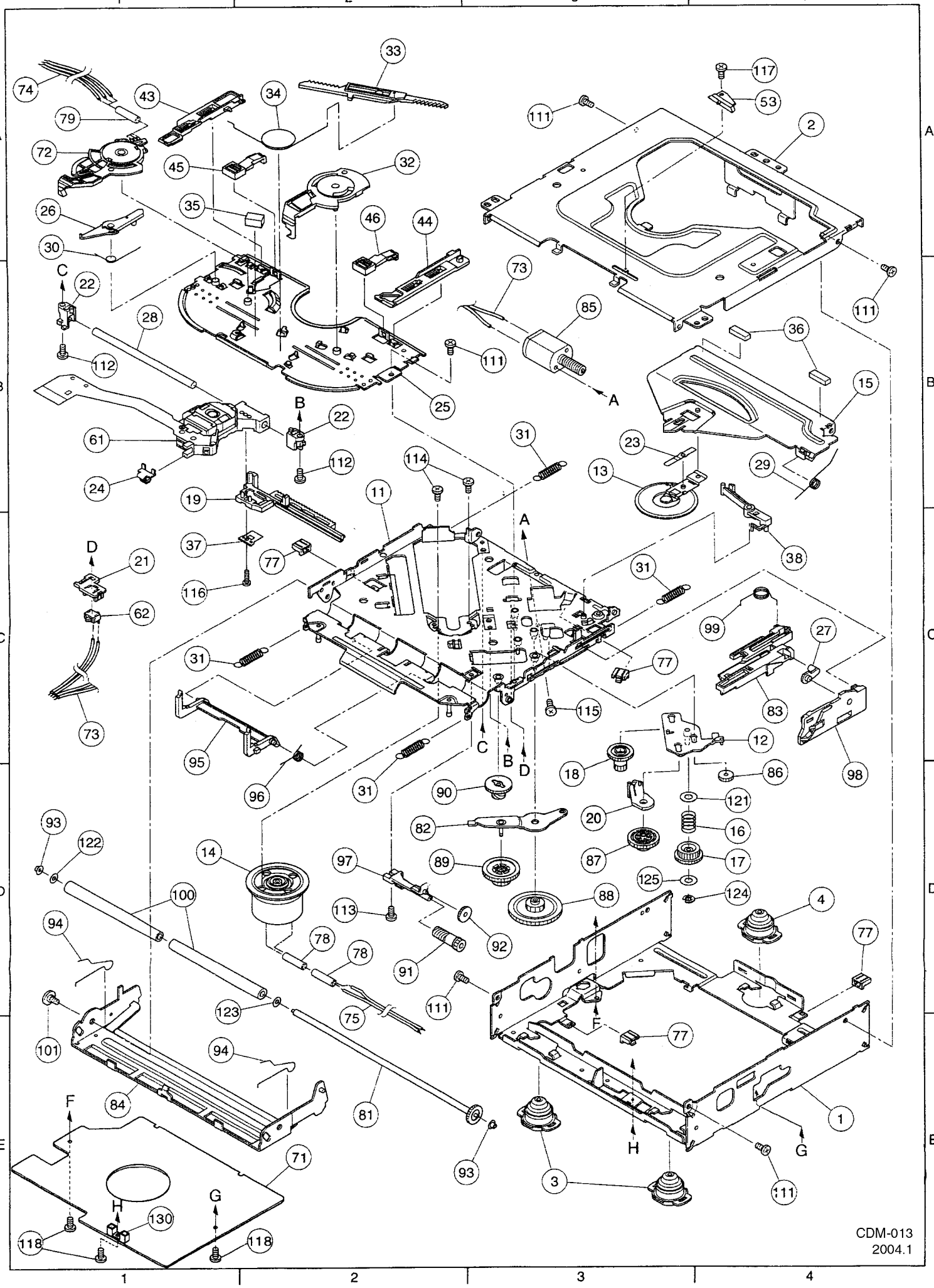
CDM-013
2004.1

• The differences among these models are mentioned below.

Features \ Models	CQ-C5400W	CQ-C5300W	CQ-C5100W
MP3/WMA playback	Yes	Yes	None
CD text display	Yes	Yes	None
AUX-IN	Yes	Yes	None
Pre-amp output voltage	5 V	2.5 V	2.5 V
Subwoofer output voltage	5 V	2.5 V	2.5 V
Direct track/file/folder/disc operation on the remote control unit	Yes	Yes	None
Remote control unit	Remote control unit with ten numbers keys	Remote control unit with ten numbers keys	Remote control unit without ten numbers keys
Face color/trim plate	Silver	Chrome black	Chrome black

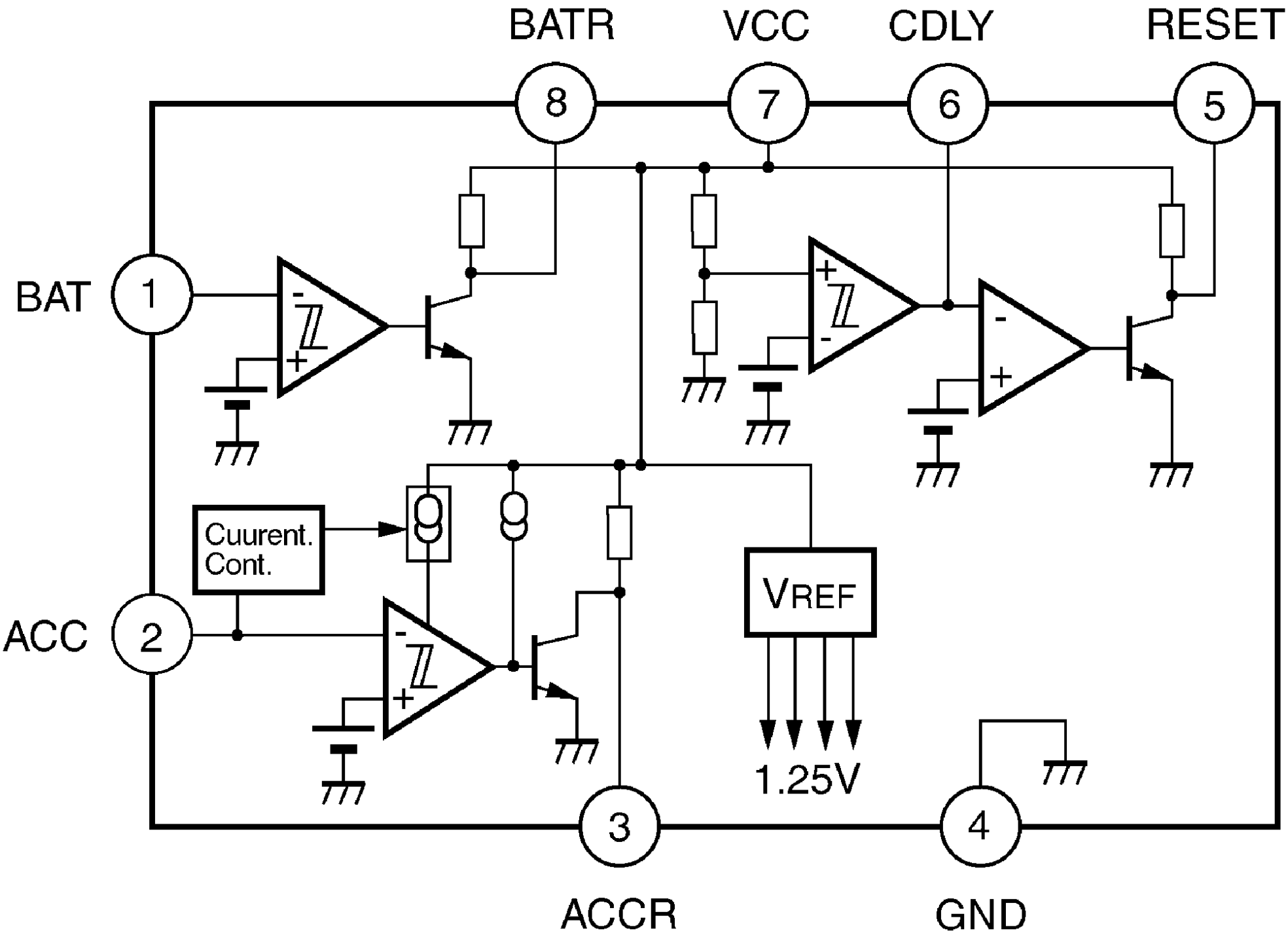
BATR
VCC
CDLY
RESET
8
7
6
5
BAT
1
Cuurent.
Cont.
ACC
2
VREF
1.25V
3
4
ACCR
GND

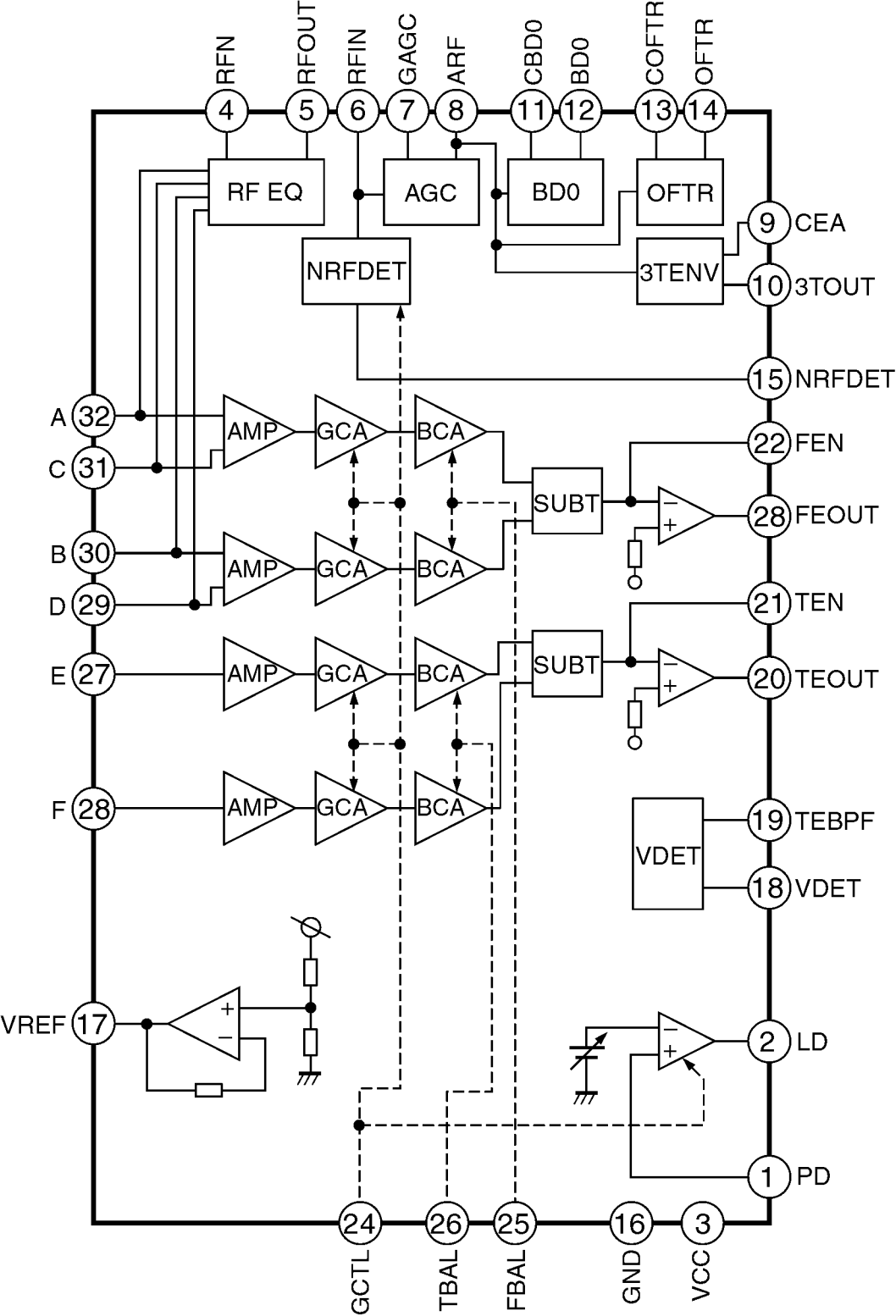
RFN
RFOUT
RFIN
GAGC
ARF
CBD0
BD0
COFTR
OFTR
4
5
6
7
8
11
12
13
14
RF EQ
AGC
BD0
OFTR
NRFDET
3TENV
9 CEA
10 3TOUT
15 NRFDET
A 32
C 31
B 30
D 29
E 27
F 28
AMP
GCA
BCA
SUBT
22 FEN
28 FEOUT
21 TEN
20 TEOUT
VDET
19 TEBPF
18 VDET
VREF 17
2 LD
1 PD
24
26
25
16
3
GCTL
TBAL
FBAL
GND
VCC

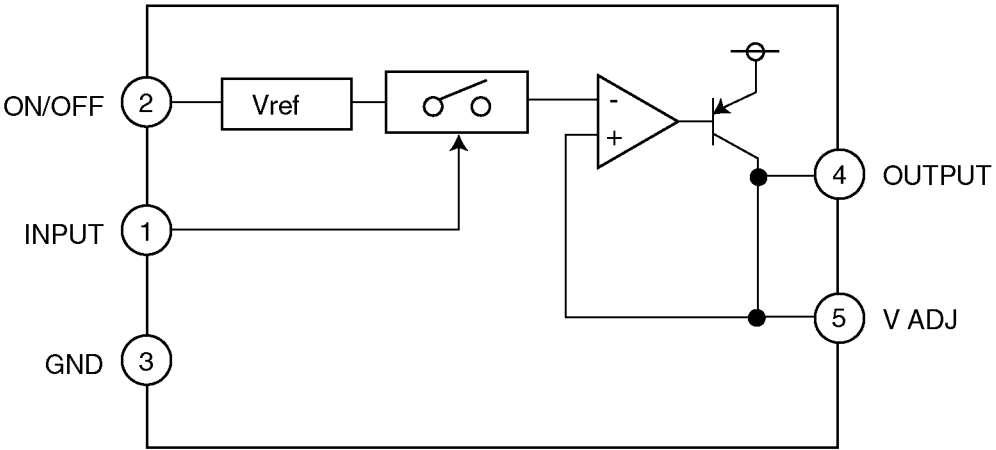
ON/OFF
2
Vref
INPUT
1
GND
3
-
+
4
OUTPUT
5
V ADJ

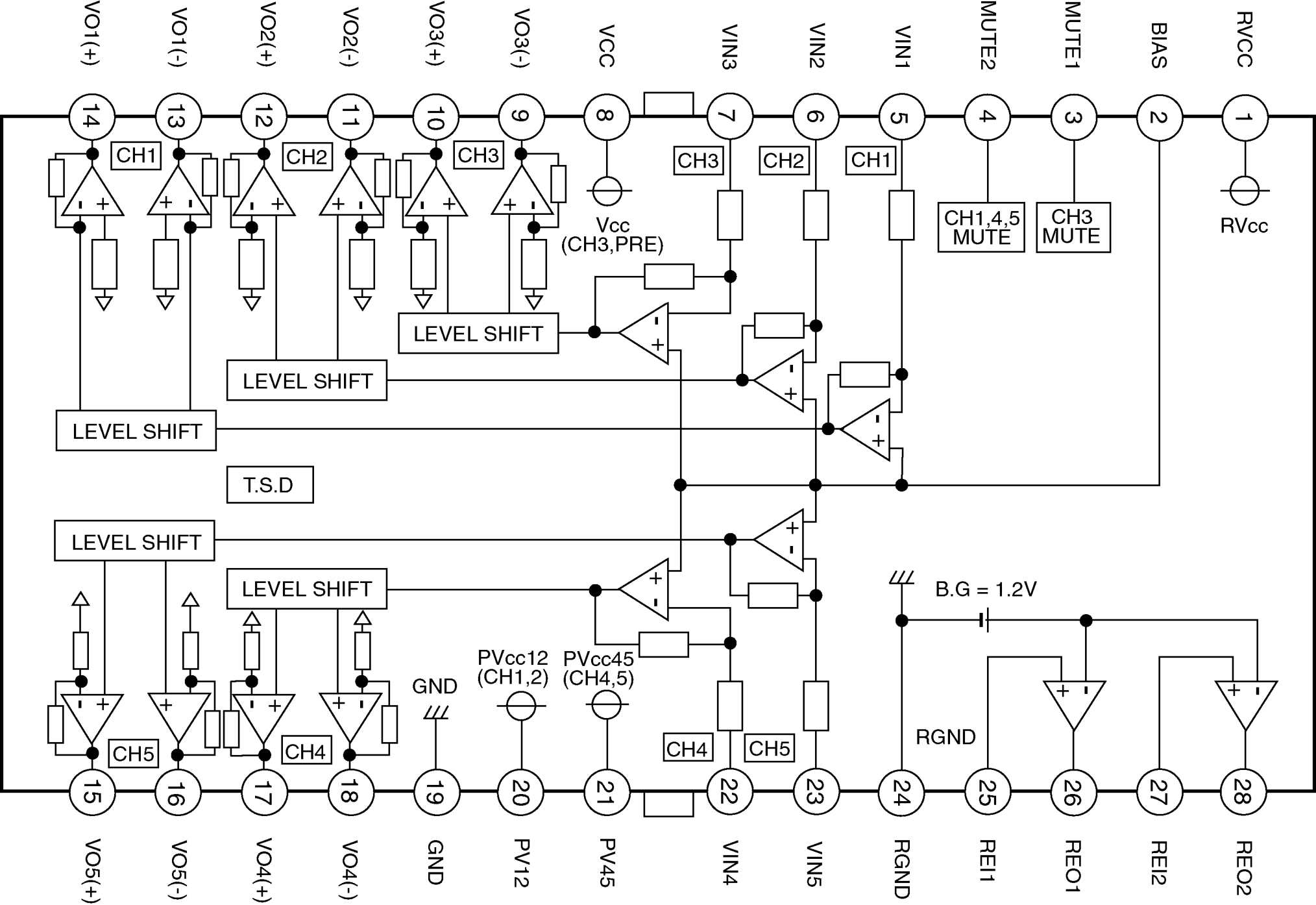
VO1(+)
VO1(-)
VO2(+)
VO2(-)
VO3(+)
VO3(-)
VCC
VIN3
VIN2
VIN1
MUTE2
MUTE1
BIAS
RVCC
14
13
12
11
10
9
8
7
6
5
4
3
2
1
CH1
CH2
CH3
CH3
CH2
CH1
Vcc
(CH3,PRE)
CH1,4,5
MUTE
CH3
MUTE
RVcc
LEVEL SHIFT
LEVEL SHIFT
LEVEL SHIFT
T.S.D
LEVEL SHIFT
LEVEL SHIFT
B.G = 1.2V
PVcc12
(CH1,2)
PVcc45
(CH4,5)
GND
CH5
CH4
CH4
CH5
RGND
15
16
17
18
19
20
21
22
23
24
25
26
27
28
VO5(+)
VO5(-)
VO4(+)
VO4(-)
GND
PV12
PV45
VIN4
VIN5
RGND
REI1
REO1
REI2
REO2

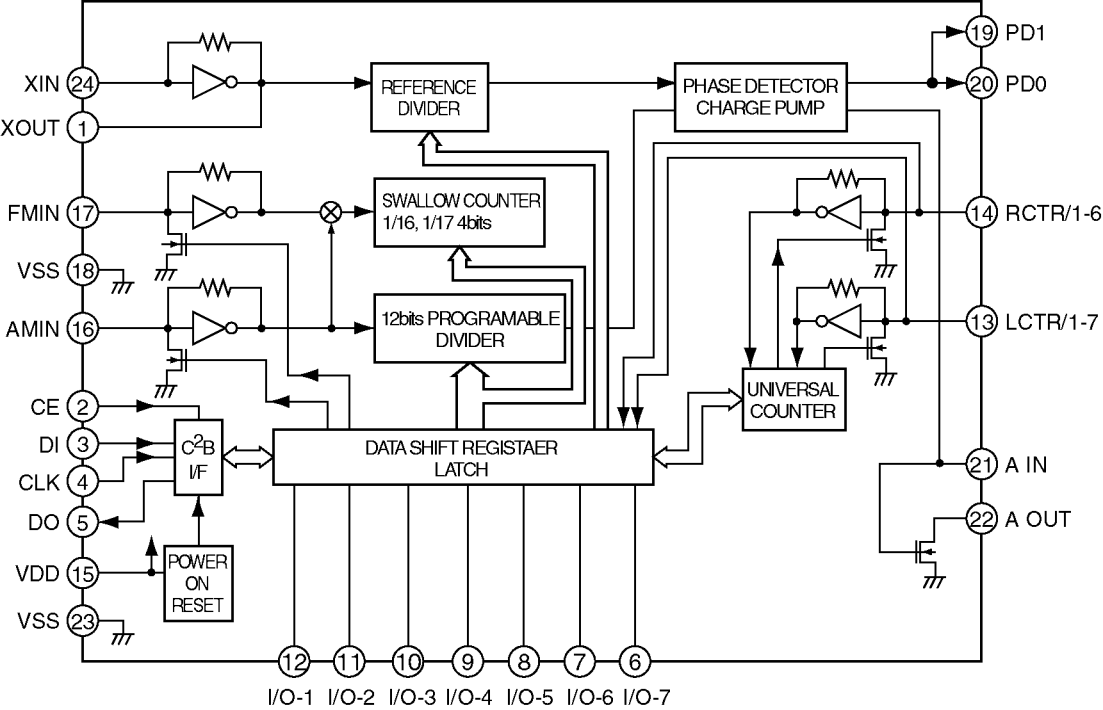
XIN
24
XOUT
1
FMIN
17
VSS
18
AMIN
16
CE
2
DI
3
CLK
4
DO
5
VDD
15
VSS
23
REFERENCE DIVIDER
PHASE DETECTOR CHARGE PUMP
SWALLOW COUNTER 1/16, 1/17 4bits
12bits PROGRAMABLE DIVIDER
C2B I/F
DATA SHIFT REGISTAER LATCH
POWER ON RESET
UNIVERSAL COUNTER
19
PD1
20
PD0
14
RCTR/1-6
13
LCTR/1-7
21
A IN
22
A OUT
12
11
10
9
8
7
6
I/O-1
I/O-2
I/O-3
I/O-4
I/O-5
I/O-6
I/O-7

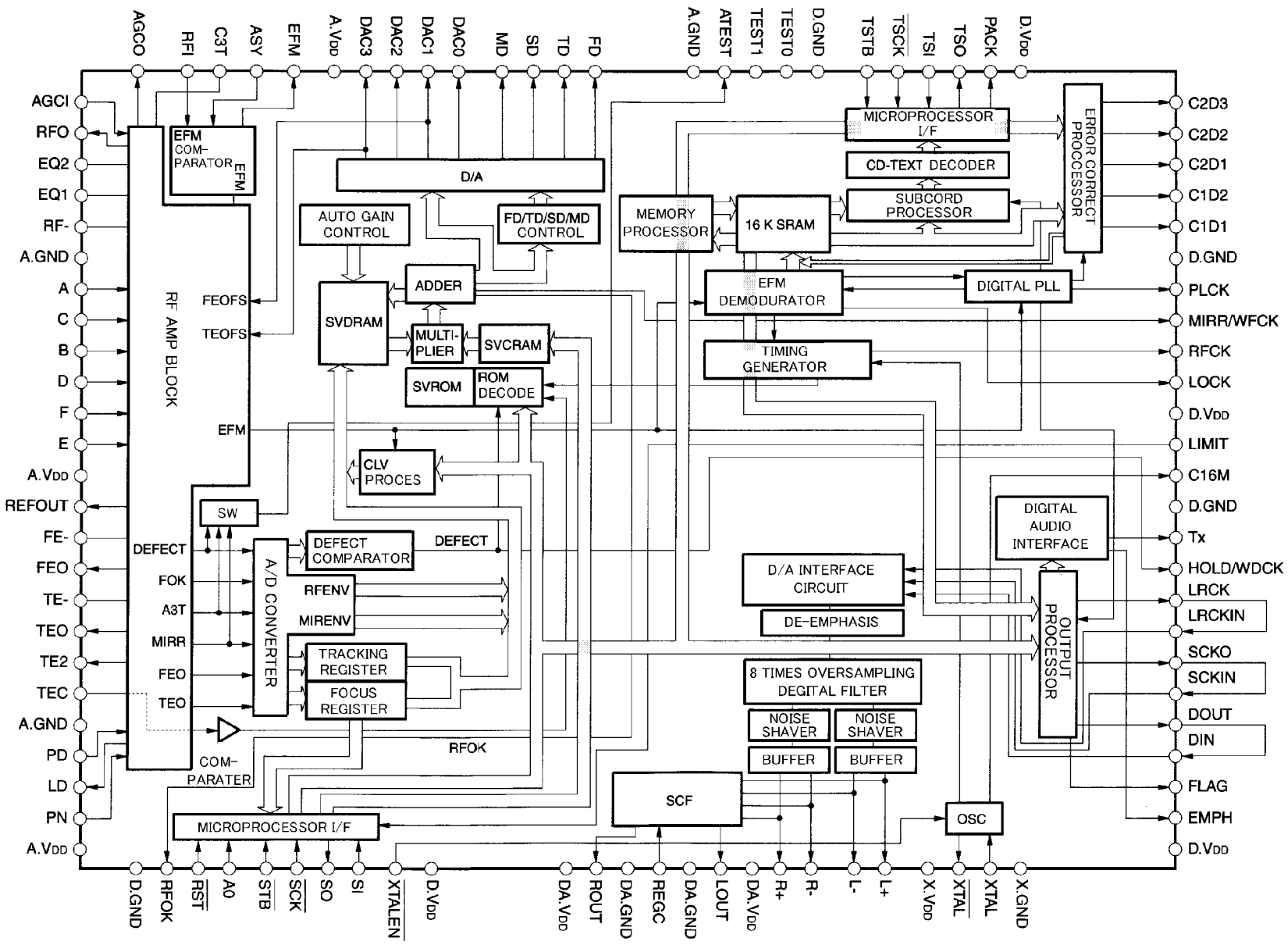
AGCO
RFI
C3T
ASY
EFM
A.VDD
DAC3
DAC2
DAC1
DAC0
MD
SD
TD
FD
A.GND
ATEST
TEST1
TEST0
D.GND
TSTB
TSCK
TSI
TSO
PACK
D.VDD
AGCI
RFO
EQ2
EQ1
RF-
A.GND
A
C
B
D
F
E
A.VDD
REFOUT
FE-
FEO
TE-
TEO
TE2
TEC
A.GND
PD
LD
PN
A.VDD
C2D3
C2D2
C2D1
C1D2
C1D1
D.GND
PLCK
MIRR/WFCK
RFCK
LOCK
D.VDD
LIMIT
C16M
D.GND
Tx
HOLD/WDCK
LRCK
LRCKIN
SCKO
SCKIN
DOUT
DIN
FLAG
EMPH
D.VDD
EFM COM-PARATOR
EFM
RF AMP BLOCK
FEOFS
TEOFS
EFM
D/A
AUTO GAIN CONTROL
FD/TD/SD/MD CONTROL
ADDER
SVDRAM
MULTI-PLIER
SVCRAM
SVROM
ROM DECODE
CLV PROCES
SW
DEFECT
FOK
A3T
MIRR
FEO
TEO
A/D CONVERTER
DEFECT COMPARATOR
DEFECT
RFENV
MIRENV
TRACKING REGISTER
FOCUS REGISTER
RFOK
COM-PARATER
MICROPROCESSOR I/F
MEMORY PROCESSOR
16 K SRAM
MICROPROCESSOR I/F
CD-TEXT DECODER
SUBCORD PROCESSOR
ERROR CORRECT PROCESSOR
EFM DEMODURATOR
DIGITAL PLL
TIMING GENERATOR
DIGITAL AUDIO INTERFACE
D/A INTERFACE CIRCUIT
DE-EMPHASIS
OUTPUT PROCESSOR
8 TIMES OVERSAMPLING DEGITAL FILTER
NOISE SHAVER
NOISE SHAVER
BUFFER
BUFFER
SCF
OSC
D.GND
RFOK
RST
A0
STB
SCK
SO
SI
XTALEN
D.VDD
DA.VDD
ROUT
DA.GND
REGC
DA.GND
LOUT
DA.VDD
R+
R-
L-
L+
X.VDD
XTAL
XTAL
X.GND

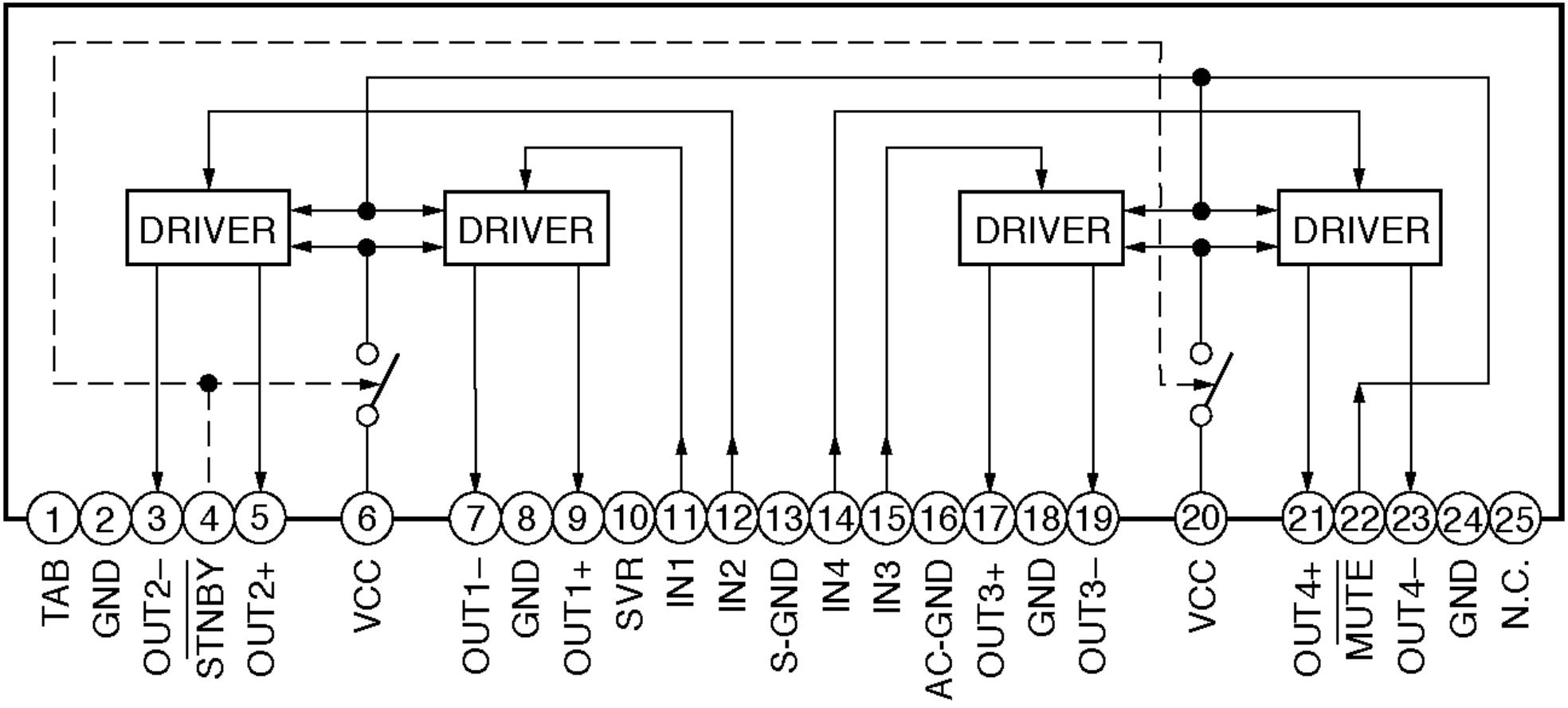
DRIVER
DRIVER
DRIVER
DRIVER
1 TAB
2 GND
3 OUT2–
4 STNBY
5 OUT2+
6 VCC
7 OUT1–
8 GND
9 OUT1+
10 SVR
11 IN1
12 IN2
13 S-GND
14 IN4
15 IN3
16 AC-GND
17 OUT3+
18 GND
19 OUT3–
20 VCC
21 OUT4+
22 MUTE
23 OUT4–
24 GND
25 N.C.

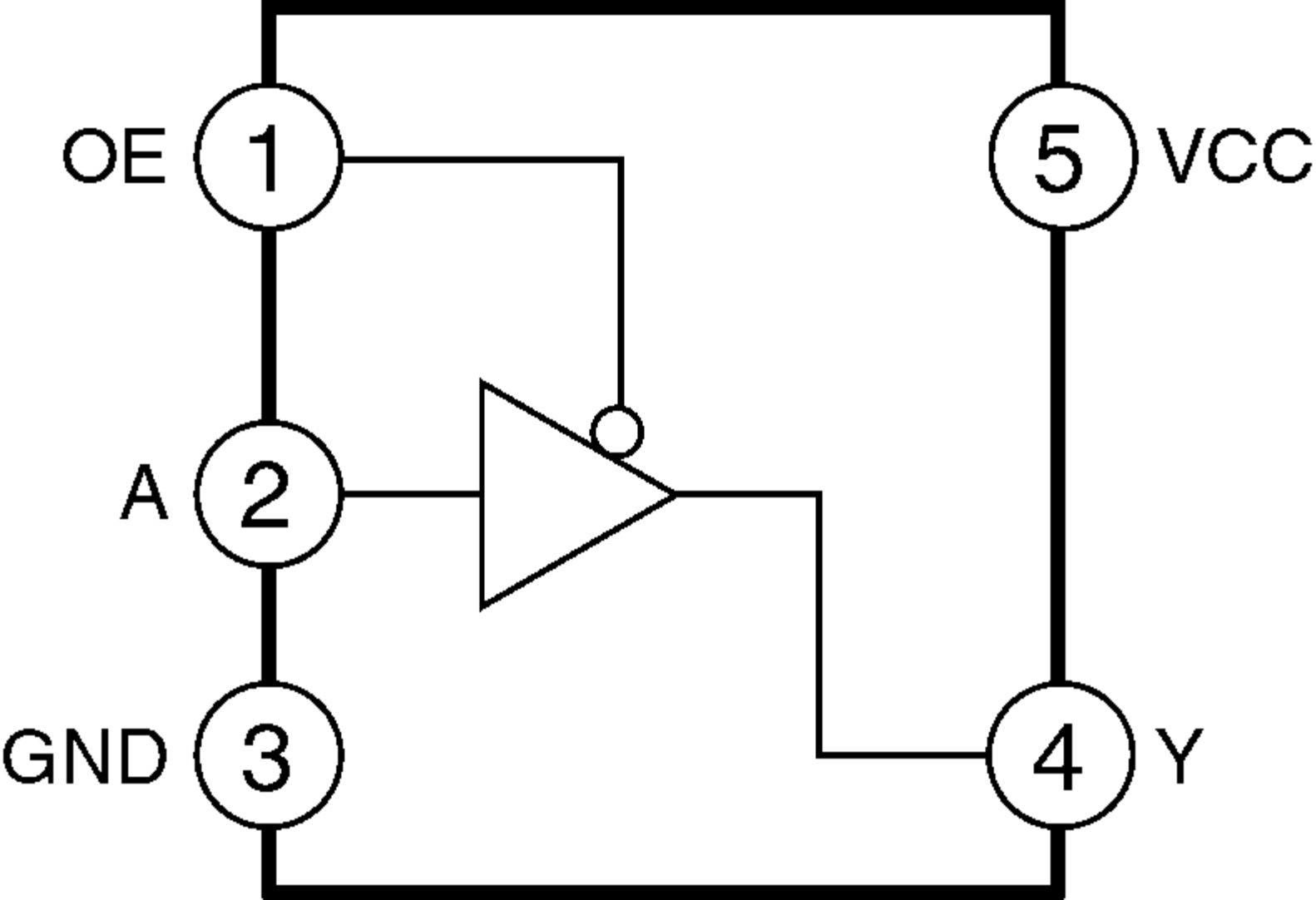
OE
1
A
2
GND
3
5
VCC
4
Y

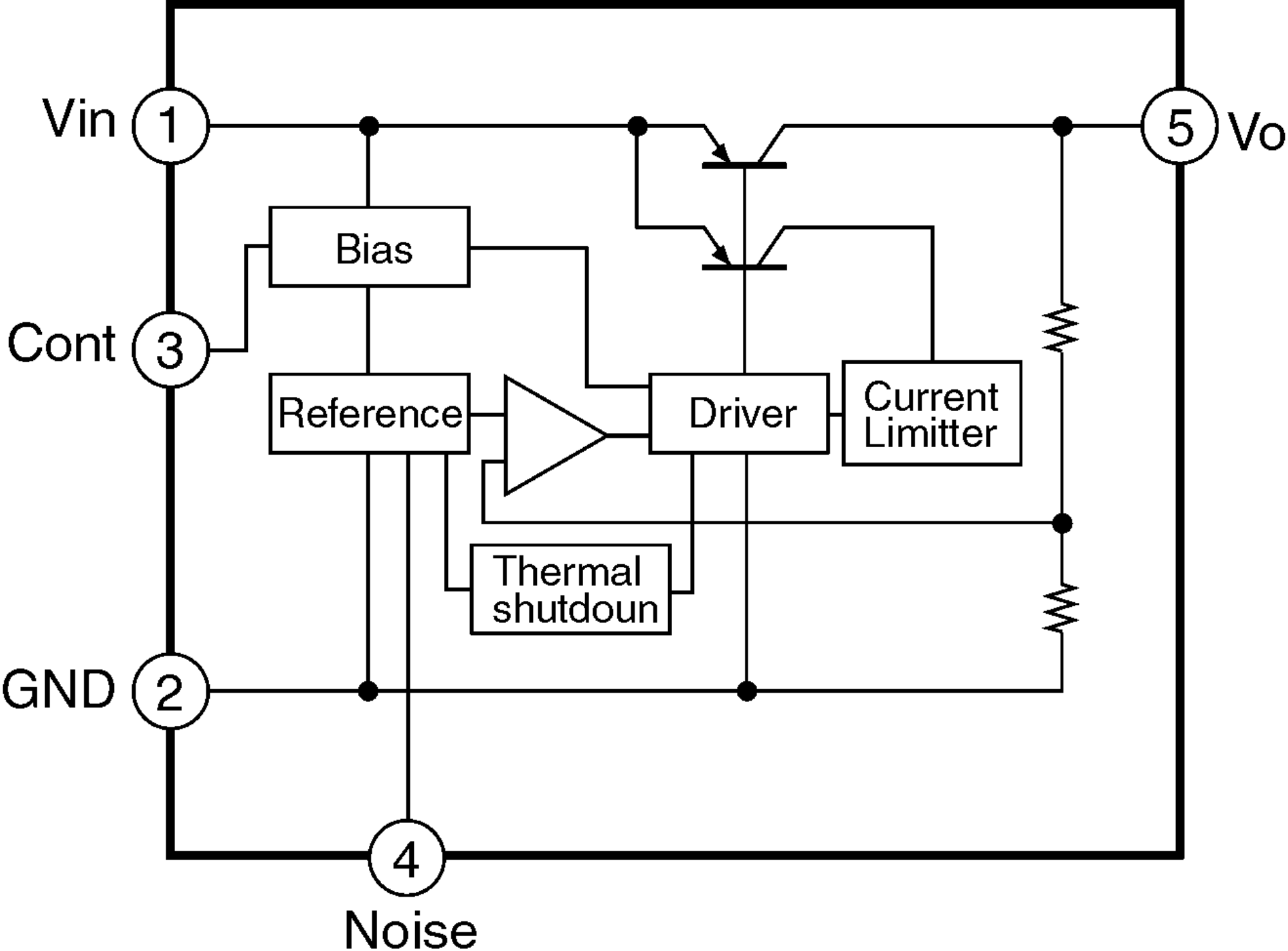
Vin
1
Cont
3
GND
2
4
Noise
5
Vo
Bias
Reference
Driver
Current
Limitter
Thermal
shutdoun

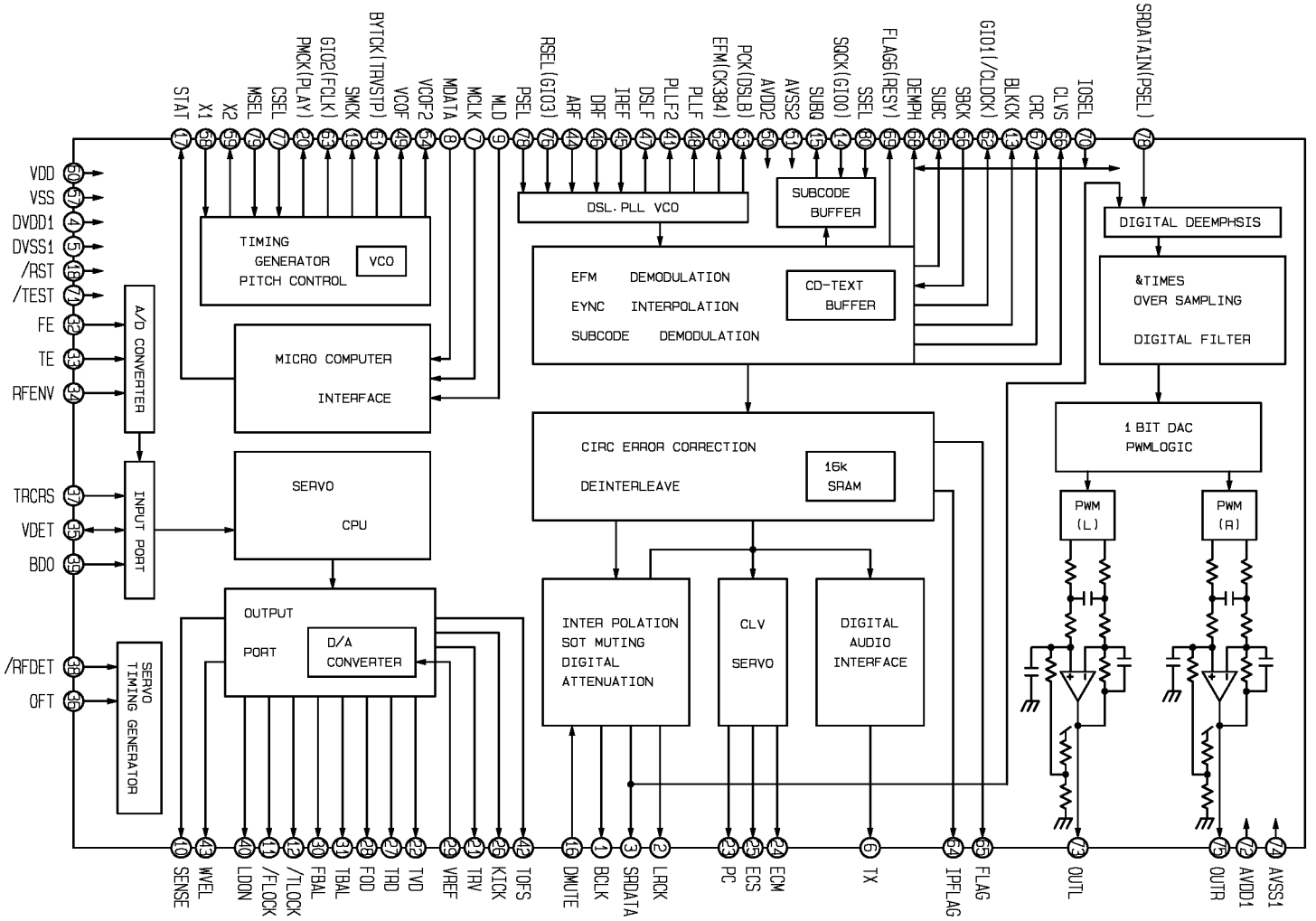
STAT 77
X1 28
X2 29
MSEL 78
CSEL 77
PMCK(PLAY) 20
GIO2(FCLK) 21
SMCK 19
BYTCK(TRVSTP) 31
VCOF 45
VCOF2 44
MDATA 8
MCLK 7
MLD 9
PSEL 78
RSEL(GIO3) 76
ARF 14
DRF 46
IREF 45
DSLF 47
PLLF2 41
PLLF 48
EFM(CK384) 42
PCK(DSLB) 43
AVDD2 30
AVSS2 31
SUBQ 15
SQCK(GIO0) 17
SSEL 80
FLAG6(RESY) 59
DEMPH 58
SUBC 55
SBCK 56
BLKCK 13
CRC 57
CLVS 58
IOSEL 10
SRDATAIN(PSEL) 78
VDD 30
VSS 31
DVDD1 4
DVSS1 5
/RST 16
/TEST 17
FE 32
TE 33
RFENV 34
TRCRS 37
VDET 35
BDO 36
/RFDET 38
OFT 39
TIMING GENERATOR PITCH CONTROL
VCO
DSL. PLL VCO
SUBCODE BUFFER
DIGITAL DEEMPHSIS
EFM DEMODULATION
EYNC INTERPOLATION
SUBCODE DEMODULATION
CD-TEXT BUFFER
&TIMES OVER SAMPLING
DIGITAL FILTER
A/D CONVERTER
MICRO COMPUTER
INTERFACE
CIRC ERROR CORRECTION
DEINTERLEAVE
16k SRAM
1 BIT DAC PWMLOGIC
PWM (L)
PWM (R)
INPUT PORT
SERVO
CPU
OUTPUT PORT
D/A CONVERTER
INTER POLATION SOT MUTING DIGITAL ATTENUATION
CLV SERVO
DIGITAL AUDIO INTERFACE
SERVO TIMING GENERATOR
SENSE 10
WVEL 13
LDON 40
/FLOCK 11
/TLOCK 12
FBAL 30
TBAL 31
FOD 28
TRD 27
TVD 22
VREF 26
TRV 23
KICK 25
TOFS 42
DMUTE 16
BCLK 1
SRDATA 3
LRCK 2
PC 23
ECS 25
ECM 24
TX 6
IPFLAG 64
FLAG 65
OUTL 73
OUTR 75
AVDD1 72
AVSS1 74

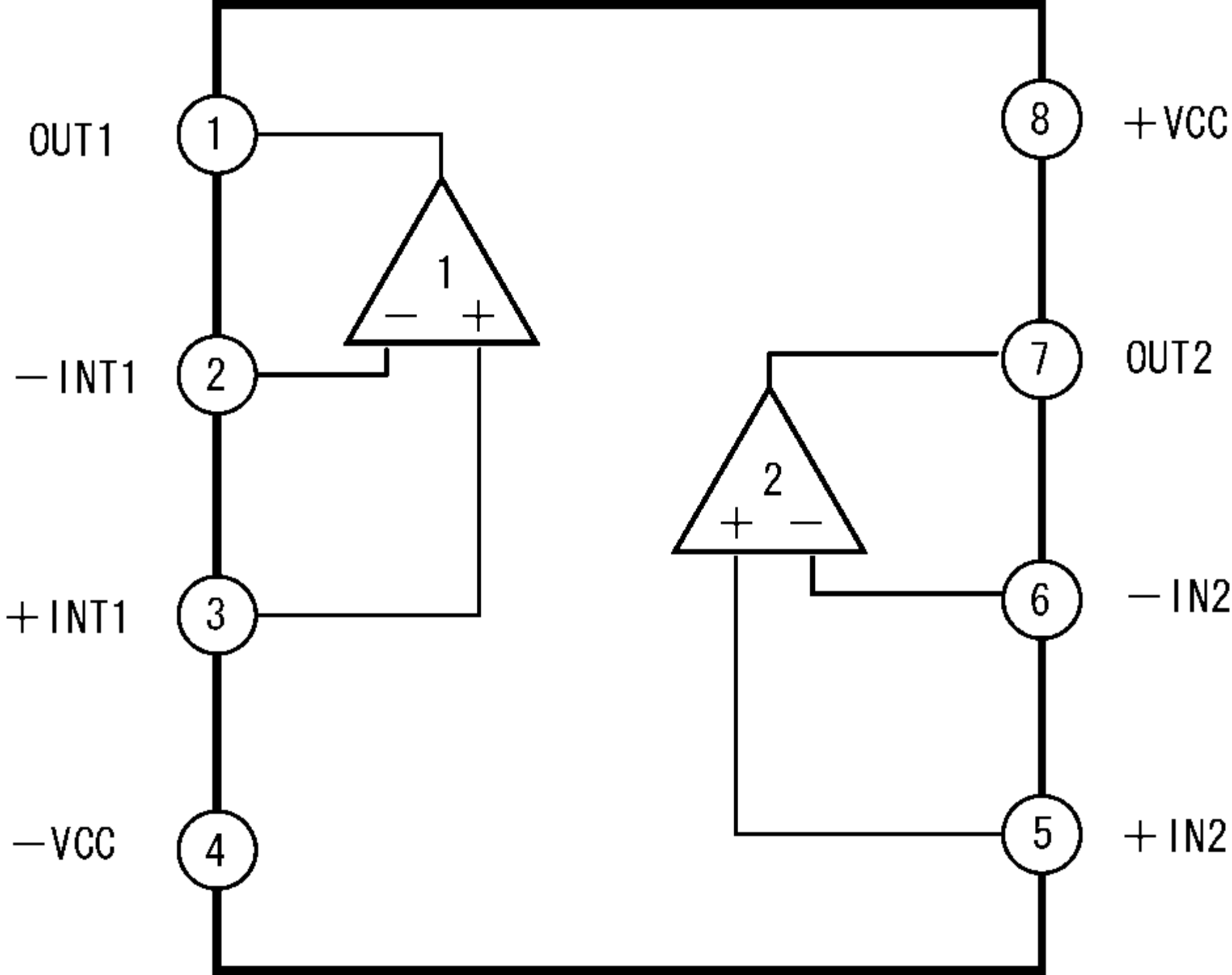
OUT1
1
−INT1
2
+INT1
3
−VCC
4
8
+VCC
7
OUT2
6
−IN2
5
+IN2
1
−
+
2
+
−

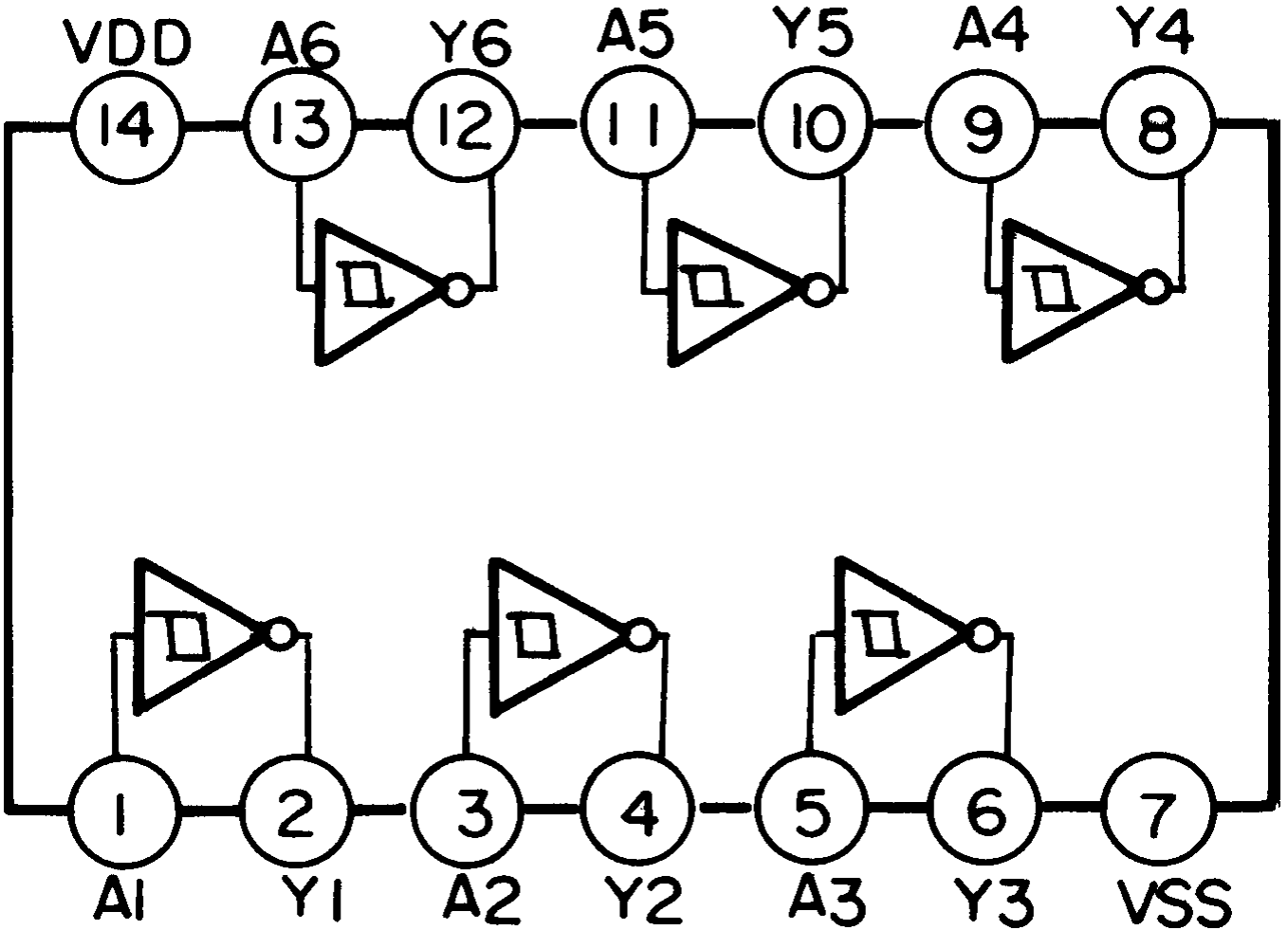
VDD
A6
Y6
A5
Y5
A4
Y4
14
13
12
11
10
9
8
1
2
3
4
5
6
7
A1
Y1
A2
Y2
A3
Y3
VSS

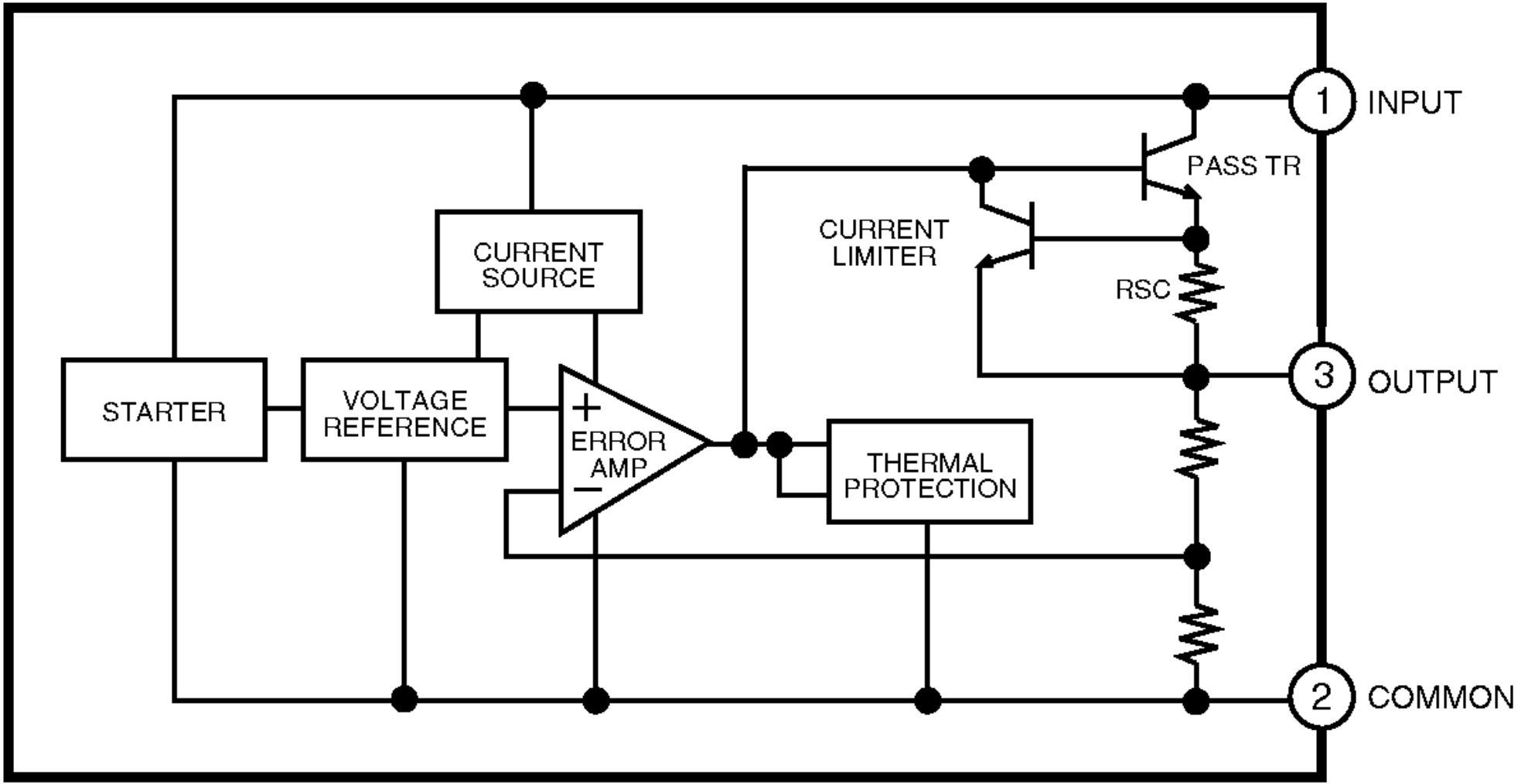
1
INPUT
PASS TR
CURRENT
LIMITER
CURRENT
SOURCE
RSC
3
OUTPUT
STARTER
VOLTAGE
REFERENCE
+
ERROR
AMP
−
THERMAL
PROTECTION
2
COMMON

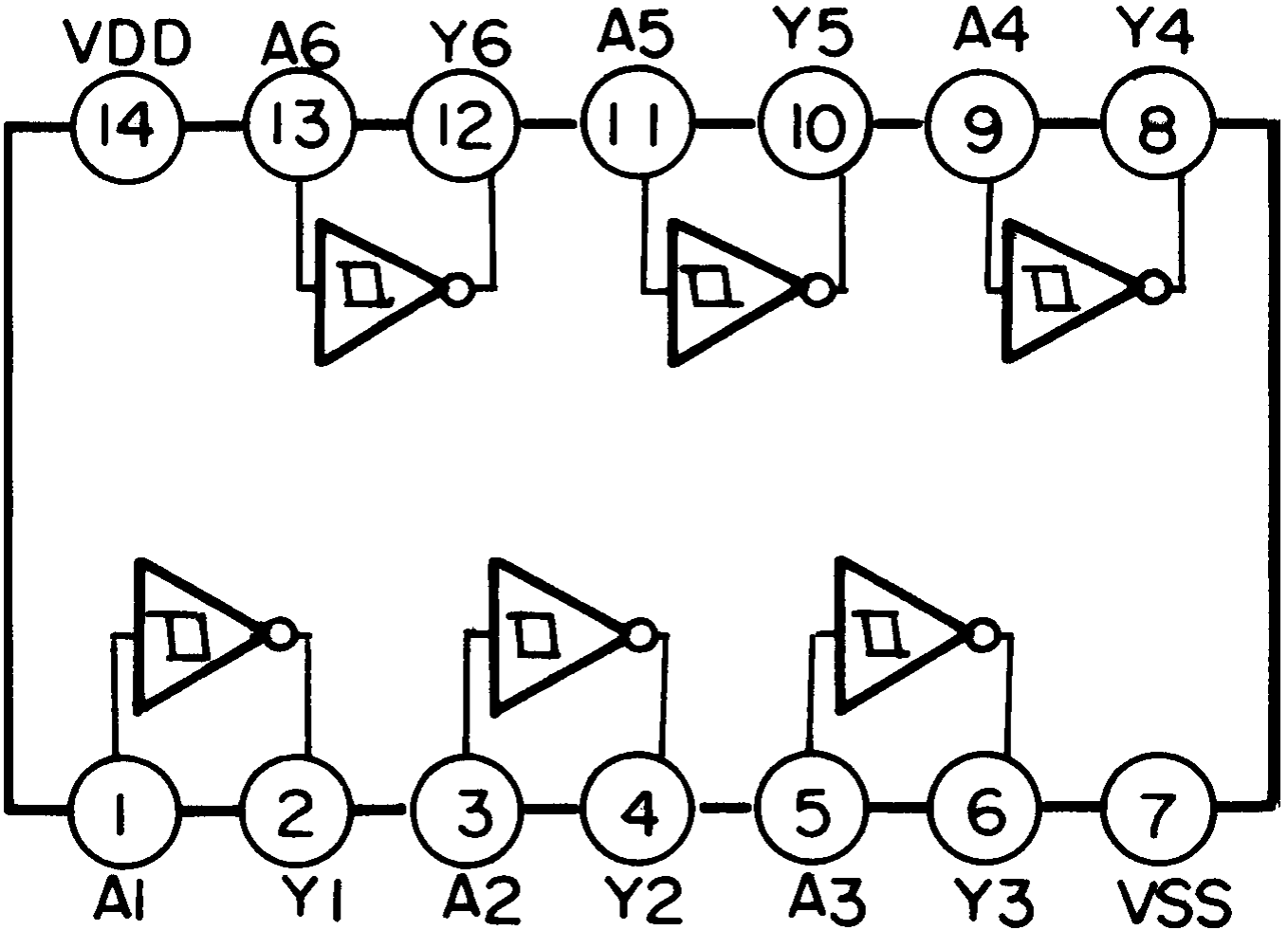
VDD
A6
Y6
A5
Y5
A4
Y4
14
13
12
11
10
9
8
1
2
3
4
5
6
7
A1
Y1
A2
Y2
A3
Y3
VSS

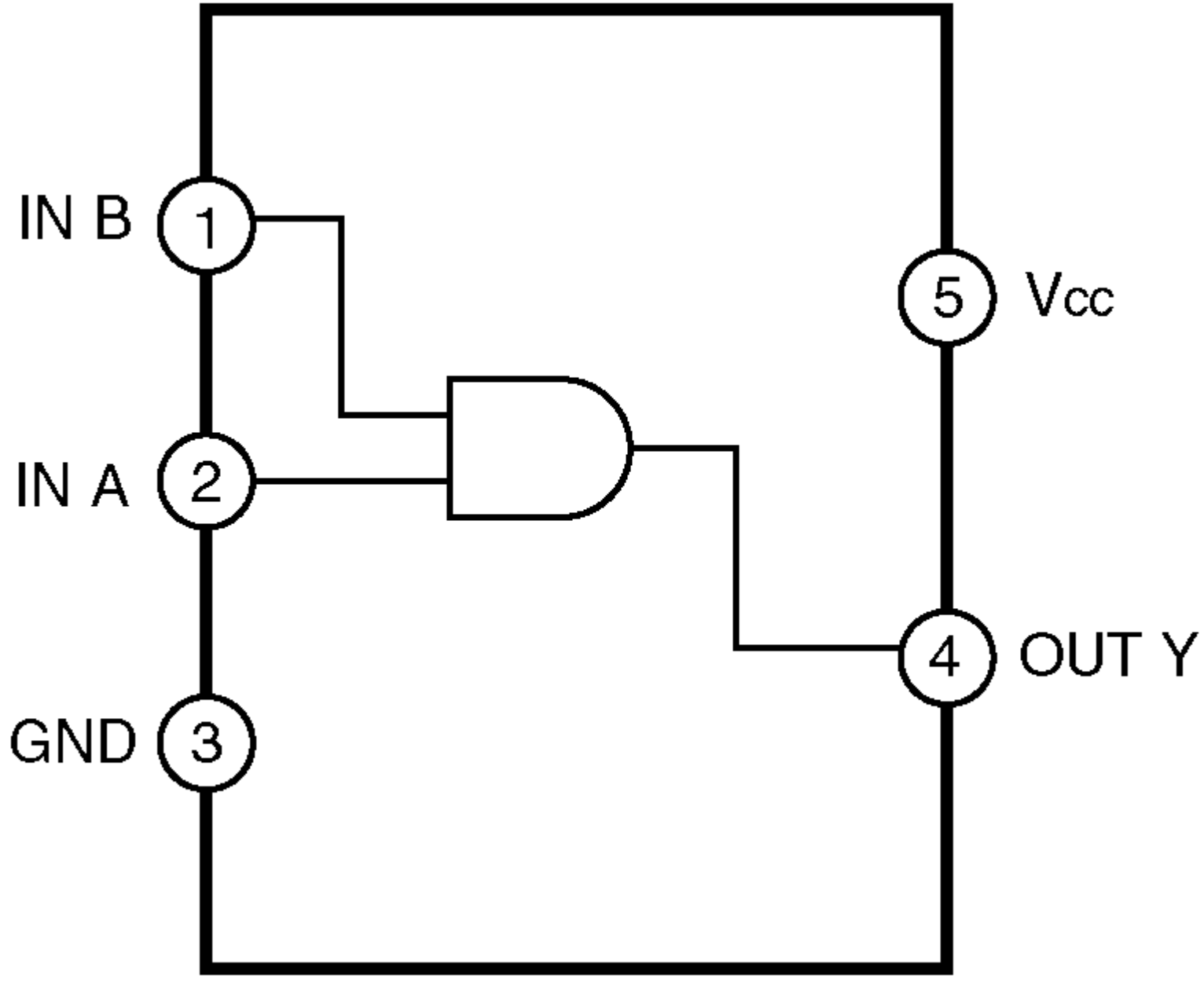
IN B
1
IN A
2
GND
3
5
Vcc
4
OUT Y

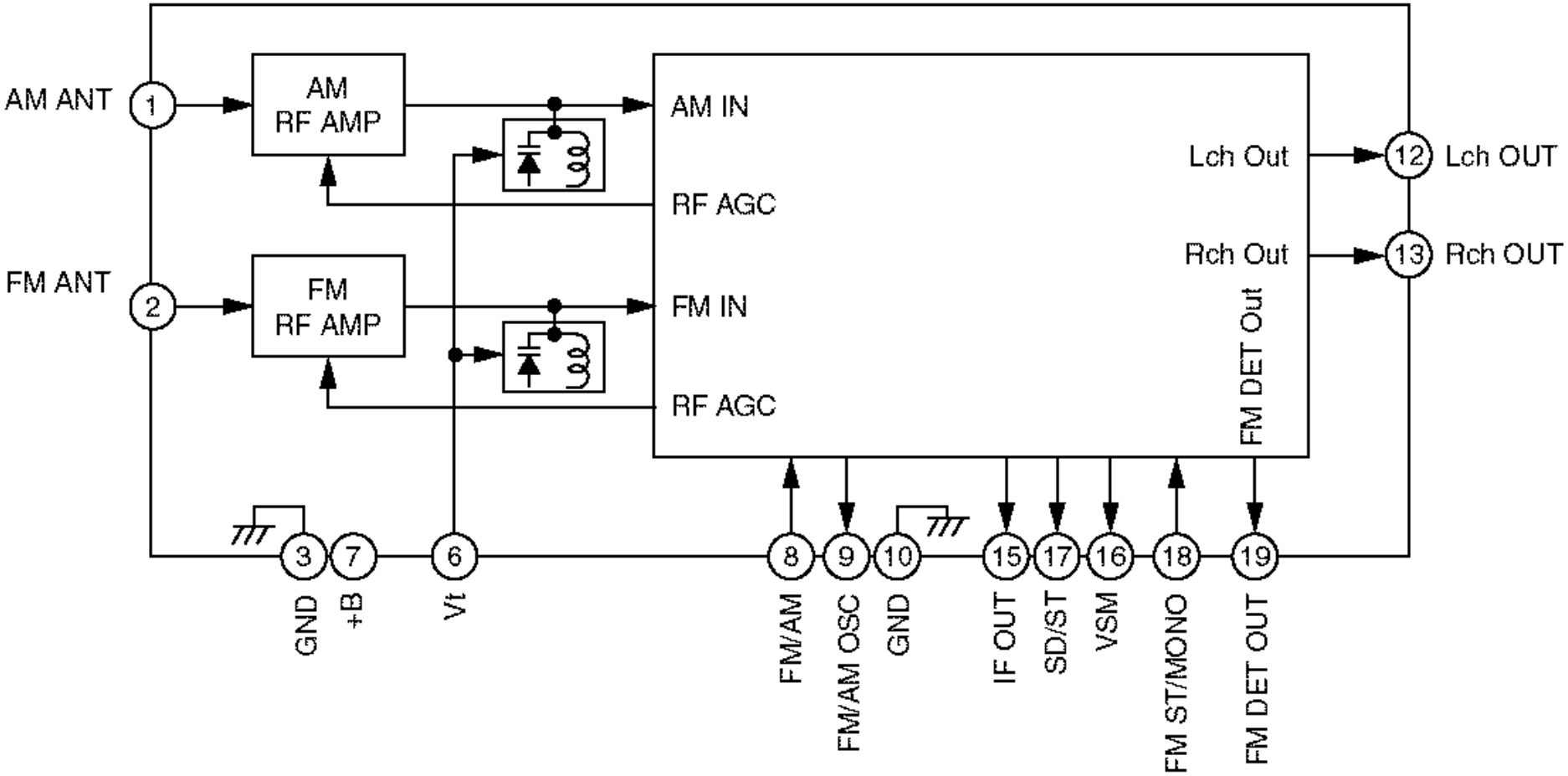
AM ANT
1
AM
RF AMP
FM ANT
2
FM
RF AMP
AM IN
RF AGC
FM IN
RF AGC
Lch Out
Rch Out
FM DET Out
12
Lch OUT
13
Rch OUT
3
7
6
8
9
10
15
17
16
18
19
GND
+B
Vt
FM/AM
FM/AM OSC
GND
IF OUT
SD/ST
VSM
FM ST/MONO
FM DET OUT

CAUTION:

This product utilizes a laser diode with the unit turned "on", laser radiation is emitted from the pickup lens.

Laser radiation from the pickup lens is safety level, but be sure the followings:

1. Do not disassemble the optical pickup unit, since radiation from exposed laser diode is dangerous.
2. Do not adjust the variable resistor on the pickup unit. It was already adjusted.
3. Do not look at the focus lens using optical instruments.
4. Recommend not to look at pickup lens for a long time.

DANGER! Visible and invisible laser radiation when open. Avoid direct exposure to beam.

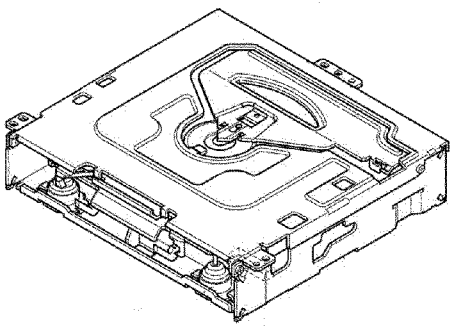

Deck Ass'y (Upper Side)

Caution

This Product utilizes a laser.

Use of controls or adjustments or performance of procedures other than those specified herein may result in hazardous radiation exposure.

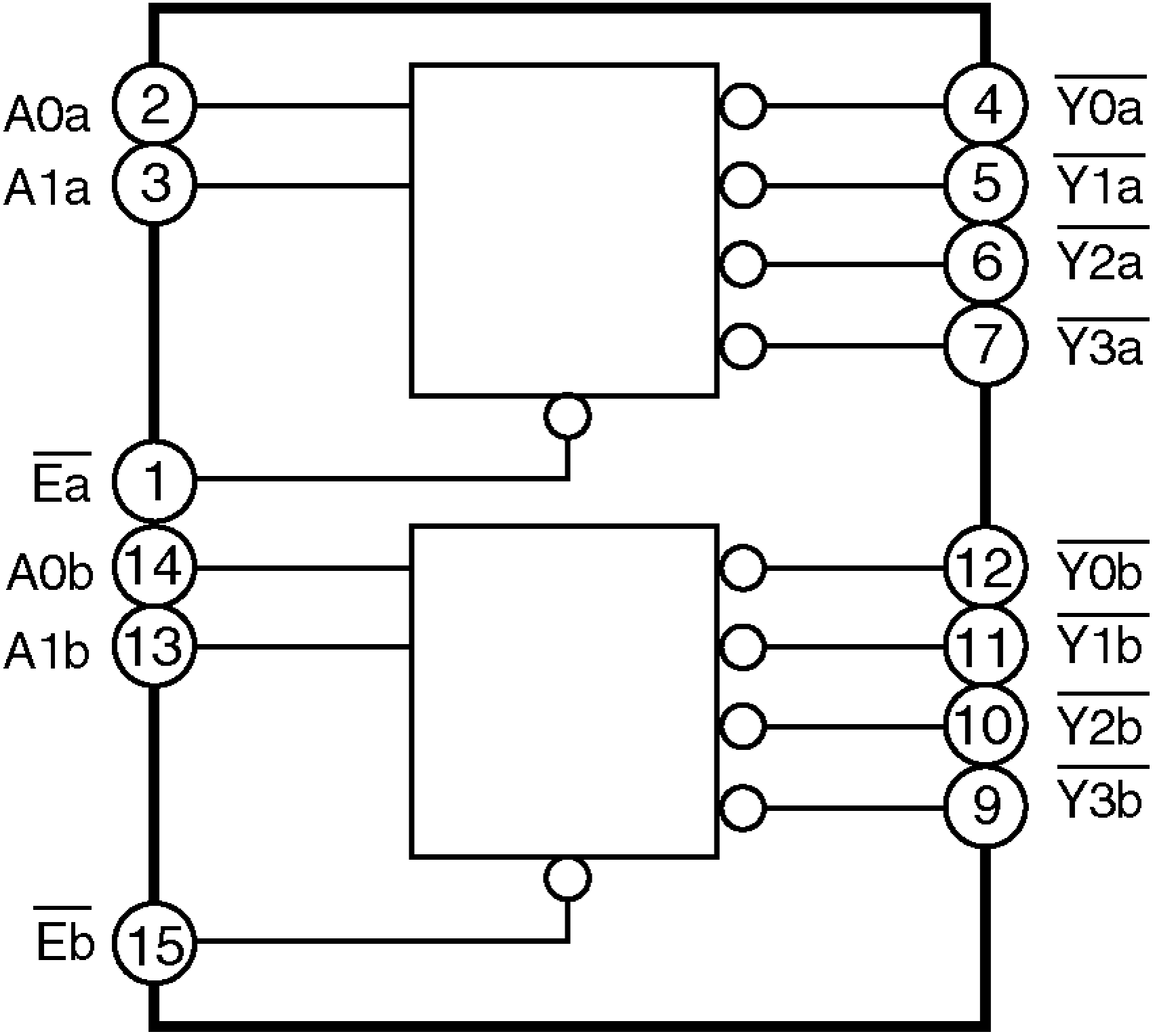
A0a
2
A1a
3
$\overline{Ea}$
1
A0b
14
A1b
13
$\overline{Eb}$
15
4
$\overline{Y0a}$
5
$\overline{Y1a}$
6
$\overline{Y2a}$
7
$\overline{Y3a}$
12
$\overline{Y0b}$
11
$\overline{Y1b}$
10
$\overline{Y2b}$
9
$\overline{Y3b}$

THIS PAGE IS JUST FOR THE PAGE LAYOUT USE ONLY.

23.4. CD Servo Block -1 [CQ-5400W/C5300W]

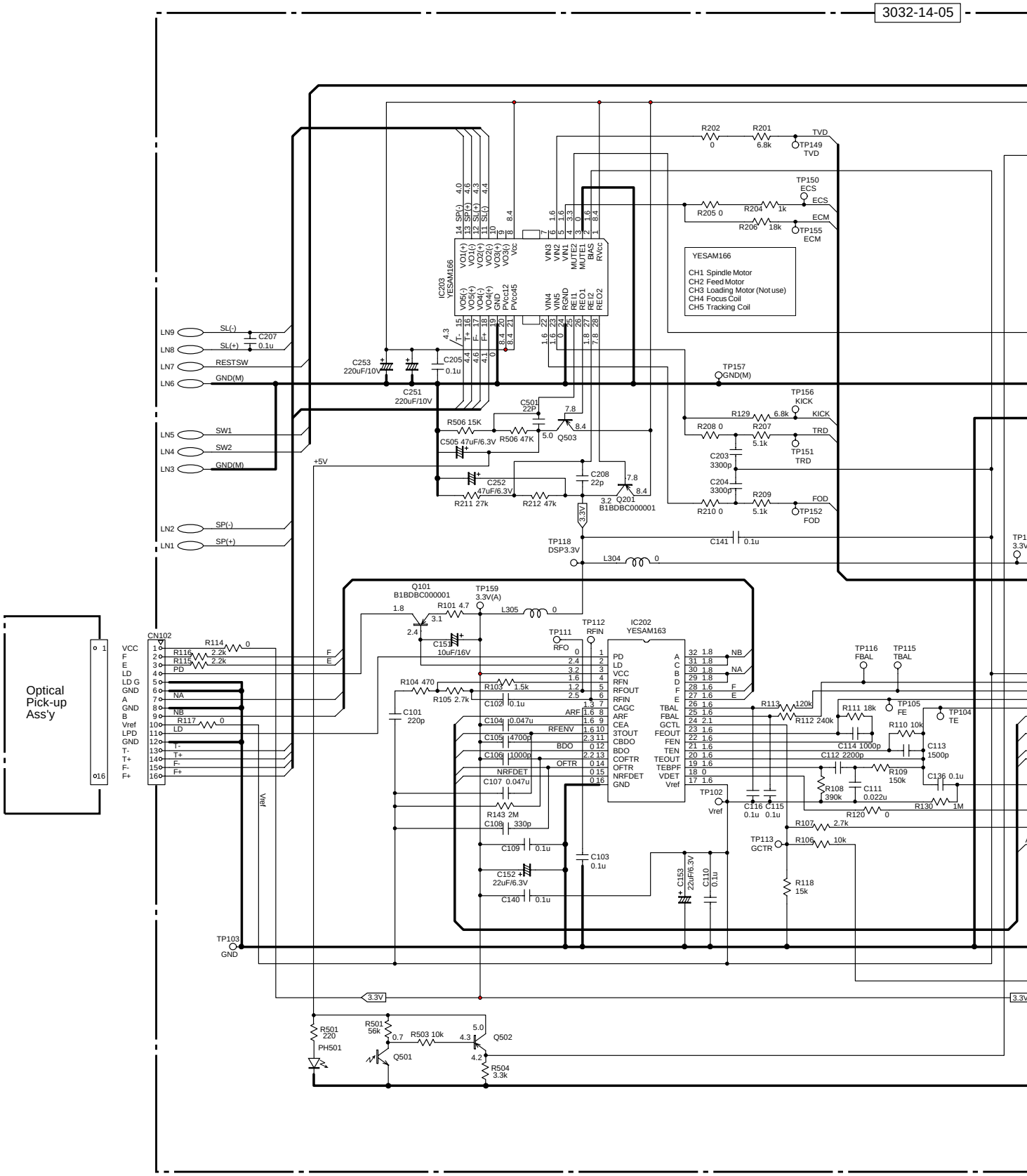

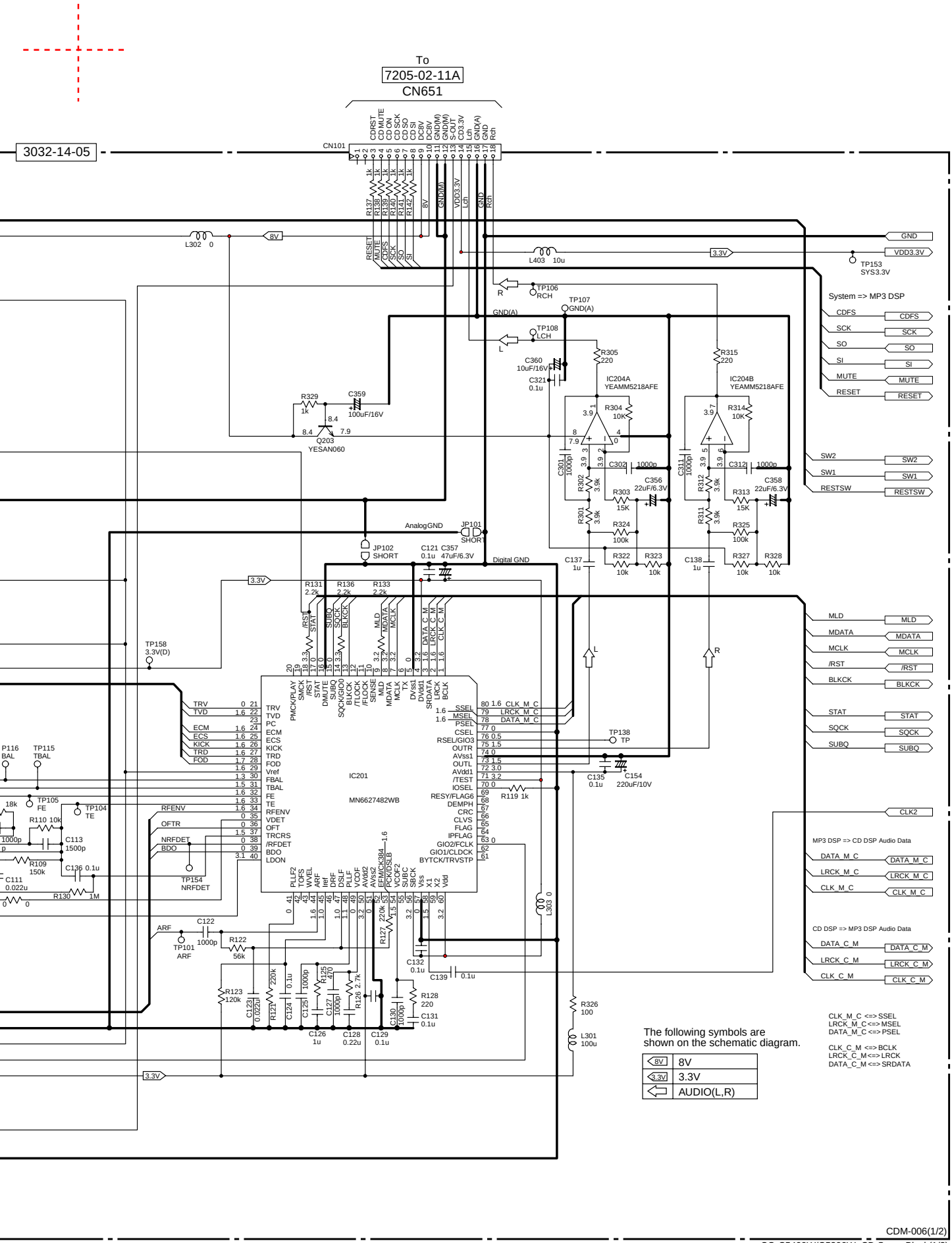
To
7205-02-11A
CN651
3032-14-05
CN101
CDRST
CD MUTE
CD ON
CD SCK
CD SO
CD SI
DC8V
DC8V
GND(M)
GND(M)
S-OUT
CD 3.3V
GND(A)
GND
Rch
R137 1k
R138 1k
R139 1k
R140 1k
R141 1k
R142 1k
8V
GND(M)
VDD3.3V
Lch
GND
Rch
RESET
MUTE
CDFS
SCK
SO
SI
L302 0
8V
L403 10u
3.3V
GND
VDD3.3V
TP153
SYS3.3V
TP106
RCH
TP107
GND(A)
GND(A)
TP108
LCH
System => MP3 DSP
CDFS
SCK
SO
SI
MUTE
RESET
C360
10uF/16V
C321
0.1u
R305
220
R315
220
IC204A
YEAMM5218AFE
IC204B
YEAMM5218AFE
R329
1k
C359
100uF/16V
Q203
YESAN060
R304
10K
R314
10K
C301
1000p
R302
3.9k
C302
1000p
C356
22uF/6.3V
R303
15K
R301
3.9k
R324
100k
C311
1000p
R312
3.9k
C312
1000p
C358
22uF/6.3V
R313
15K
R311
3.9k
R325
100k
SW2
SW1
RESTSW
AnalogGND
JP101
SHORT
JP102
SHORT
C121
0.1u
C357
47uF/6.3V
Digital GND
C137
1u
R322
10k
R323
10k
C138
1u
R327
10k
R328
10k
3.3V
R131
2.2k
R136
2.2k
R133
2.2k
/RST
STAT
SUBQ
SQCK
BLKCK
MLD
MDATA
MCLK
DATA_C_M
LRCK_C_M
CLK_C_M
MLD
MDATA
MCLK
/RST
BLKCK
STAT
SQCK
SUBQ
TP158
3.3V(D)
TRV
TVD
PC
ECM
ECS
KICK
TRD
FOD
Vref
FBAL
TBAL
FE
TE
RFENV
VDET
OFT
TRCRS
/RFDET
BDO
LDON
PMCK/PLAY
SMCK
/RST
STAT
DMUTE
SUBQ
SQCK/CD0
BLKCK
KICK
/TLOCK
/FLOCK
SENSE
MLD
MDATA
MCLK
TX
DVss1
DVdd1
SRDATA
LRCK
BCLK
SSEL
MSEL
PSEL
CSEL
RSEL/GIO3
OUTR
AVss1
OUTL
AVdd1
/TEST
IOSEL
RESY/FLAG6
DEMPH
CRC
CLVS
FLAG
IPFLAG
GIO2/FCLK
GIO1/CLDCK
BYTCK/TRVSTP
CLK_M_C
LRCK_M_C
DATA_M_C
IC201
MN6627482WB
TP138
TP
C135
0.1u
C154
220uF/10V
R119 1k
P116
BAL
TP115
TBAL
TP105
FE
TP104
TE
R110 10k
C113
1500p
R109
150k
C136 0.1u
C111
0.022u
R130 1M
RFENV
OFTR
NRFDET
BDO
TP154
NRFDET
ARF
C122
1000p
TP101
ARF
R122
56k
R123
120k
C123
0.022u
R121
220k
C124
0.1u
C125
1000p
R125
470
C127
1000p
R126 2.7k
R127 220k
C126
1u
C128
0.22u
C129
0.1u
C130
1000p
R128
220
C131
0.1u
C132
0.1u
C139
0.1u
L303 0
R326
100
L301
100u
CLK2
MP3 DSP => CD DSP Audio Data
DATA_M_C
LRCK_M_C
CLK_M_C
CD DSP => MP3 DSP Audio Data
DATA_C_M
LRCK_C_M
CLK_C_M
CLK_M_C <=> SSEL
LRCK_M_C <=> MSEL
DATA_M_C <=> PSEL
CLK_C_M <=> BCLK
LRCK_C_M <=> LRCK
DATA_C_M <=> SRDATA
The following symbols are shown on the schematic diagram.
8V
8V
3.3V
3.3V
AUDIO(L,R)
CDM-006(1/2)
CQ-C5400W/C5300W CD Servo Block(1/2)

23.5. CD Servo Block -2 [CQ-C5400W/C5300W]

3032-14-05

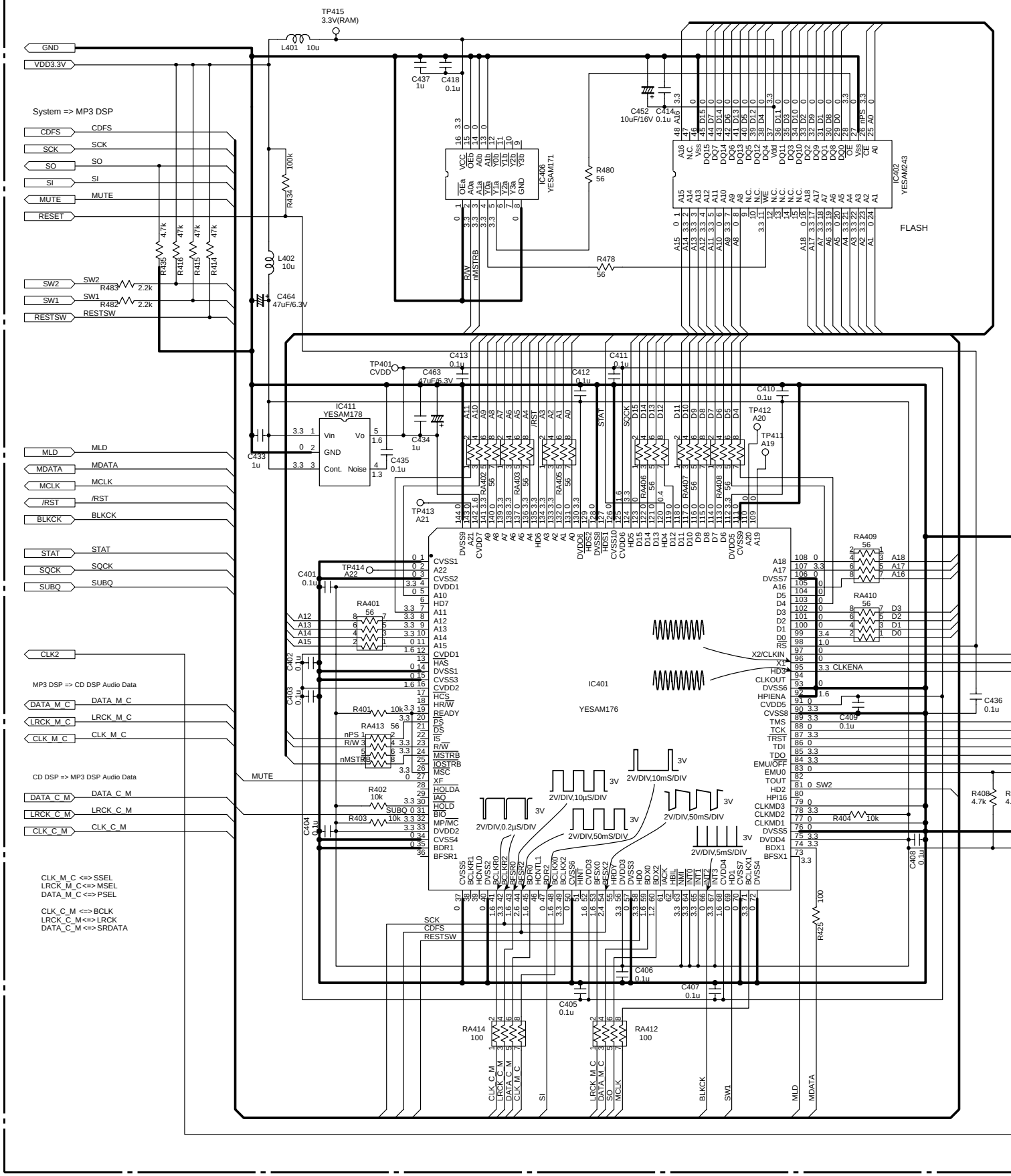

4-05

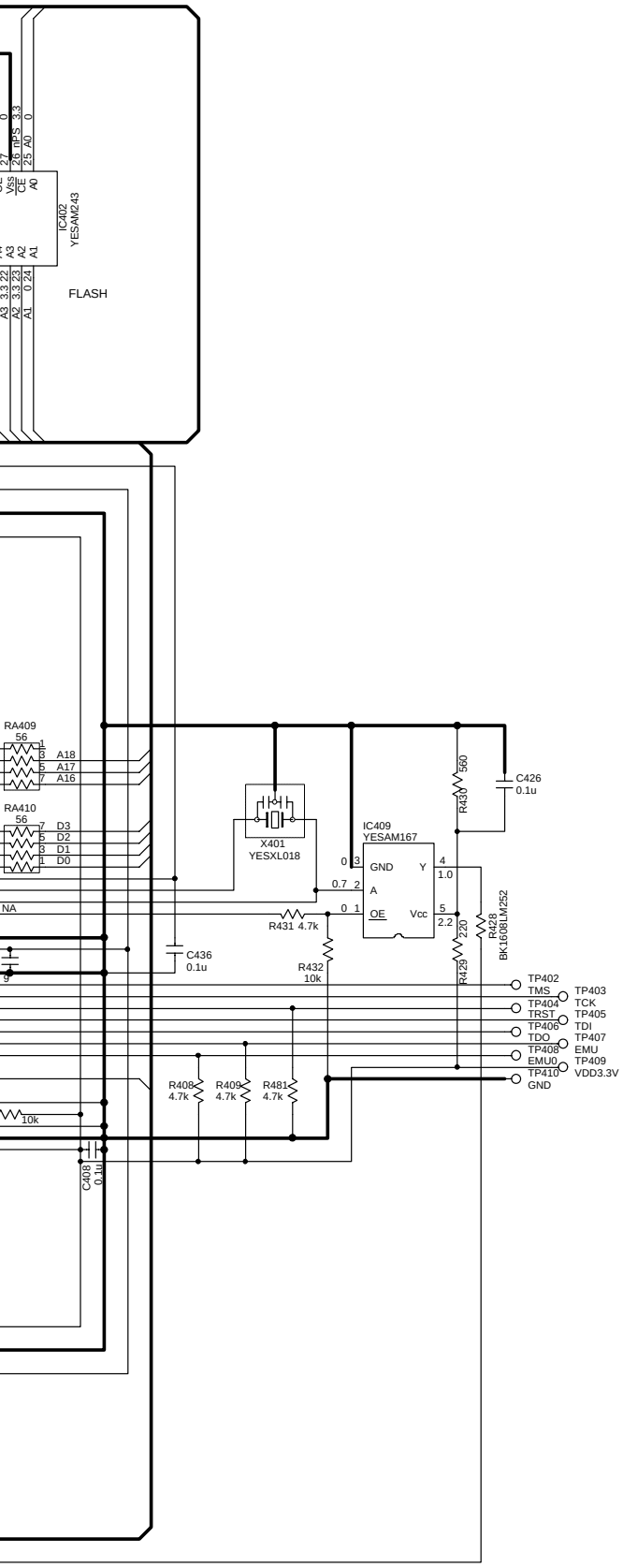

CDM-006(2/2)

CQ-C5400W/C5300W CD Servo (2/2)

23.6. CD Servo Block [CQ-C5100W]

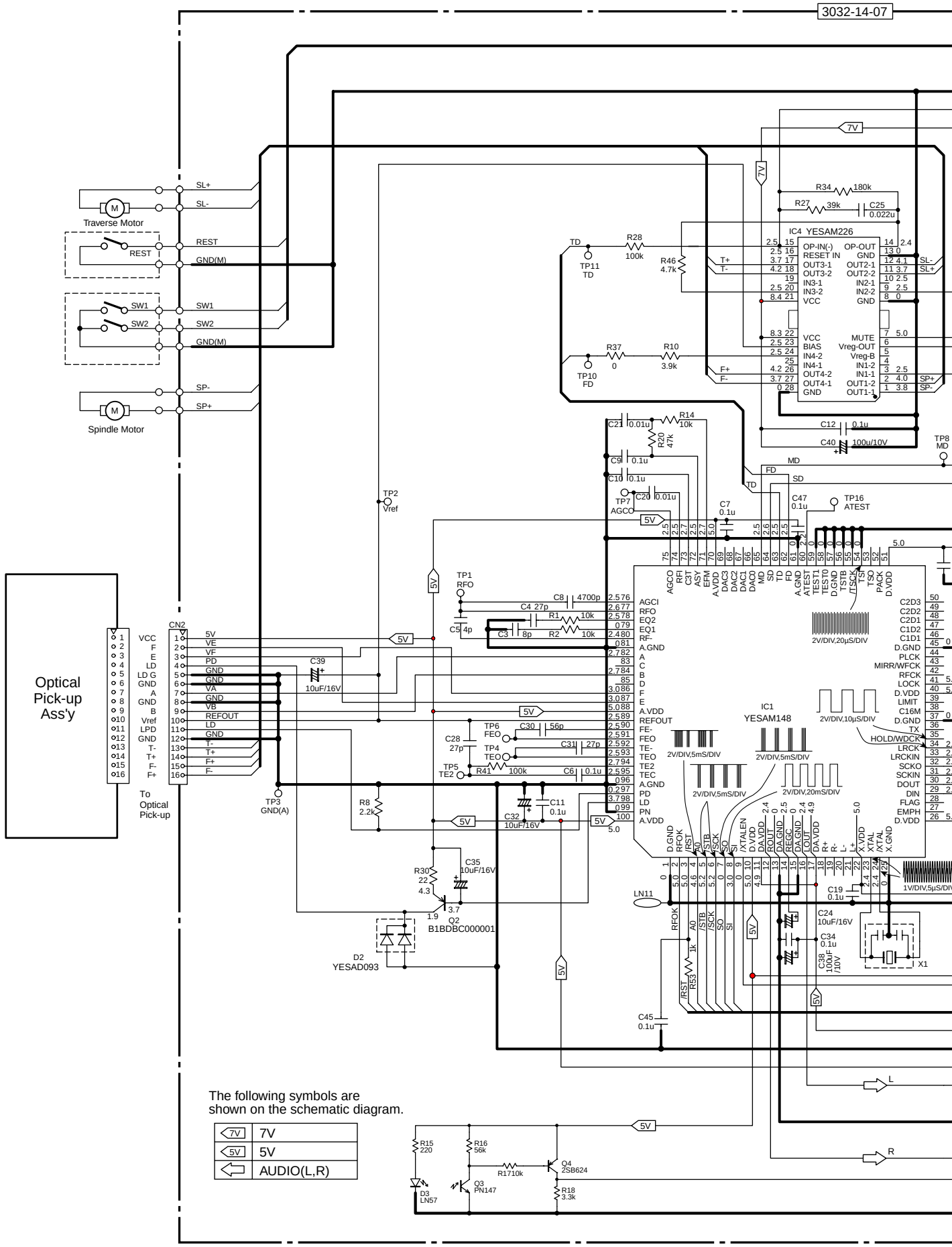

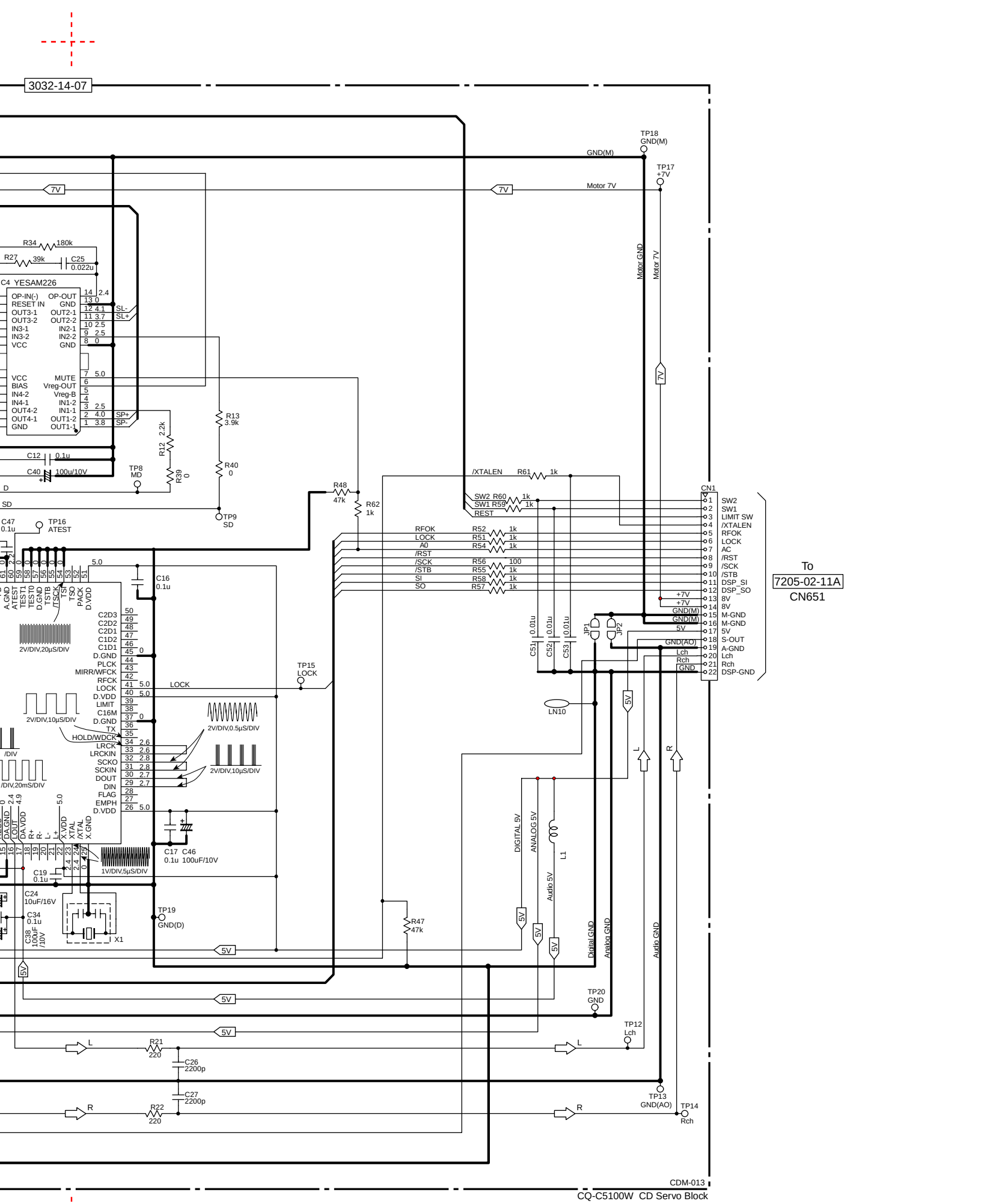

CQ-C5100W CD Servo Block

23.3. Display Block

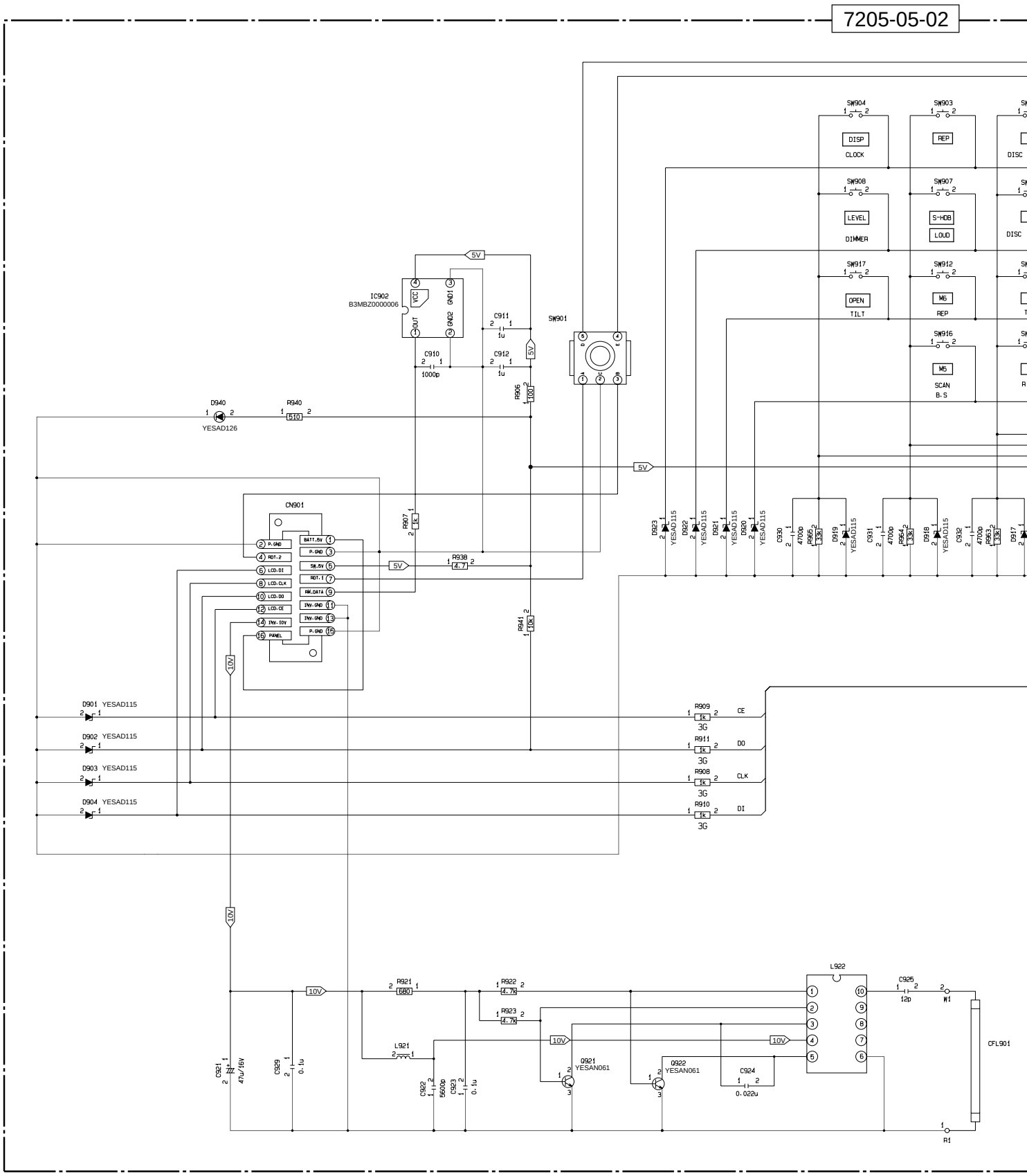

05-05-02

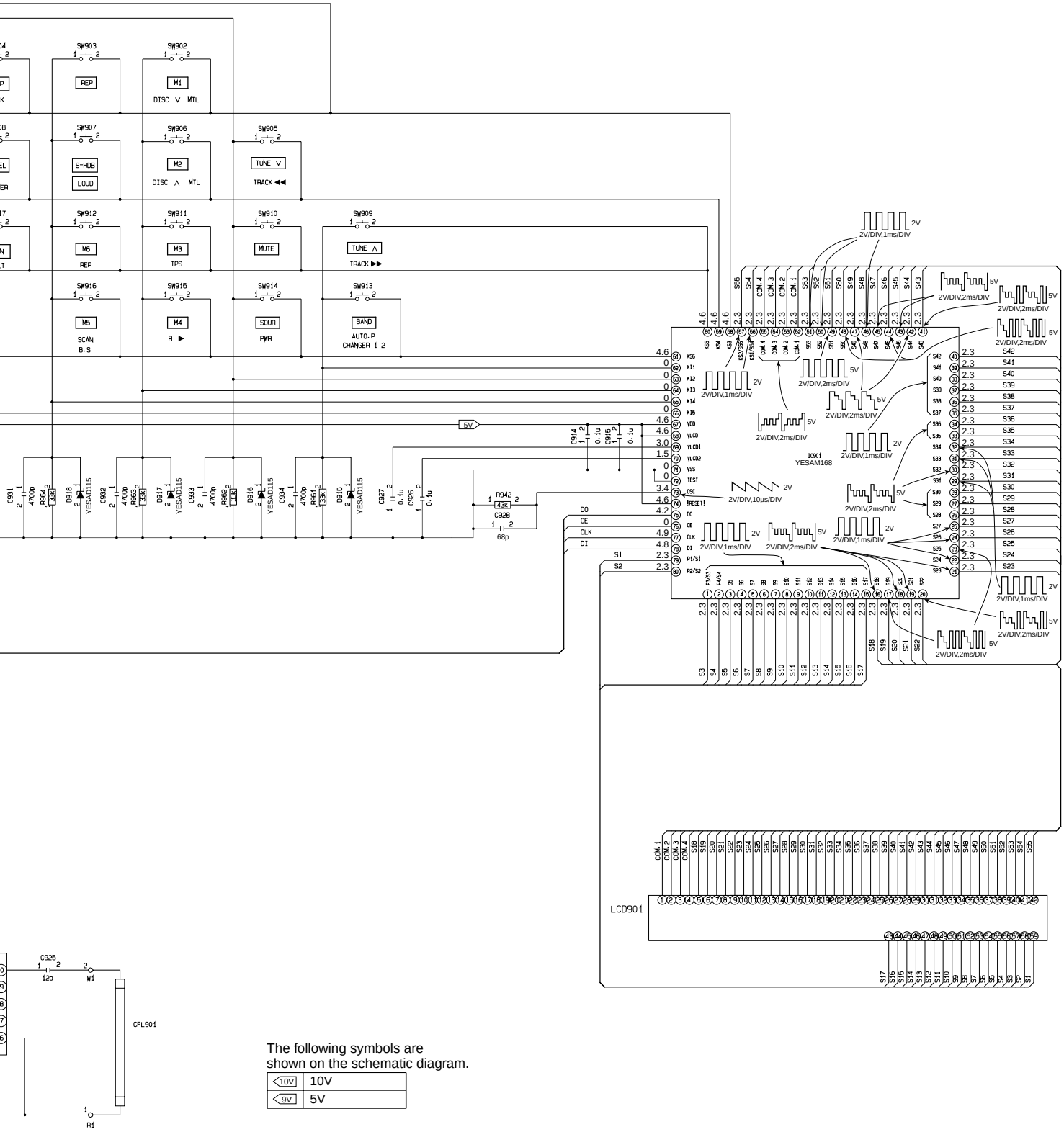

The following symbols are shown on the schematic diagram.

10V	10V
9V	5V

CQ-C5100W/CQ-C5300WN/CQ-C5400W DISPLAY

23.2. Main Block [CQ-C5100W]

7205-02-11A

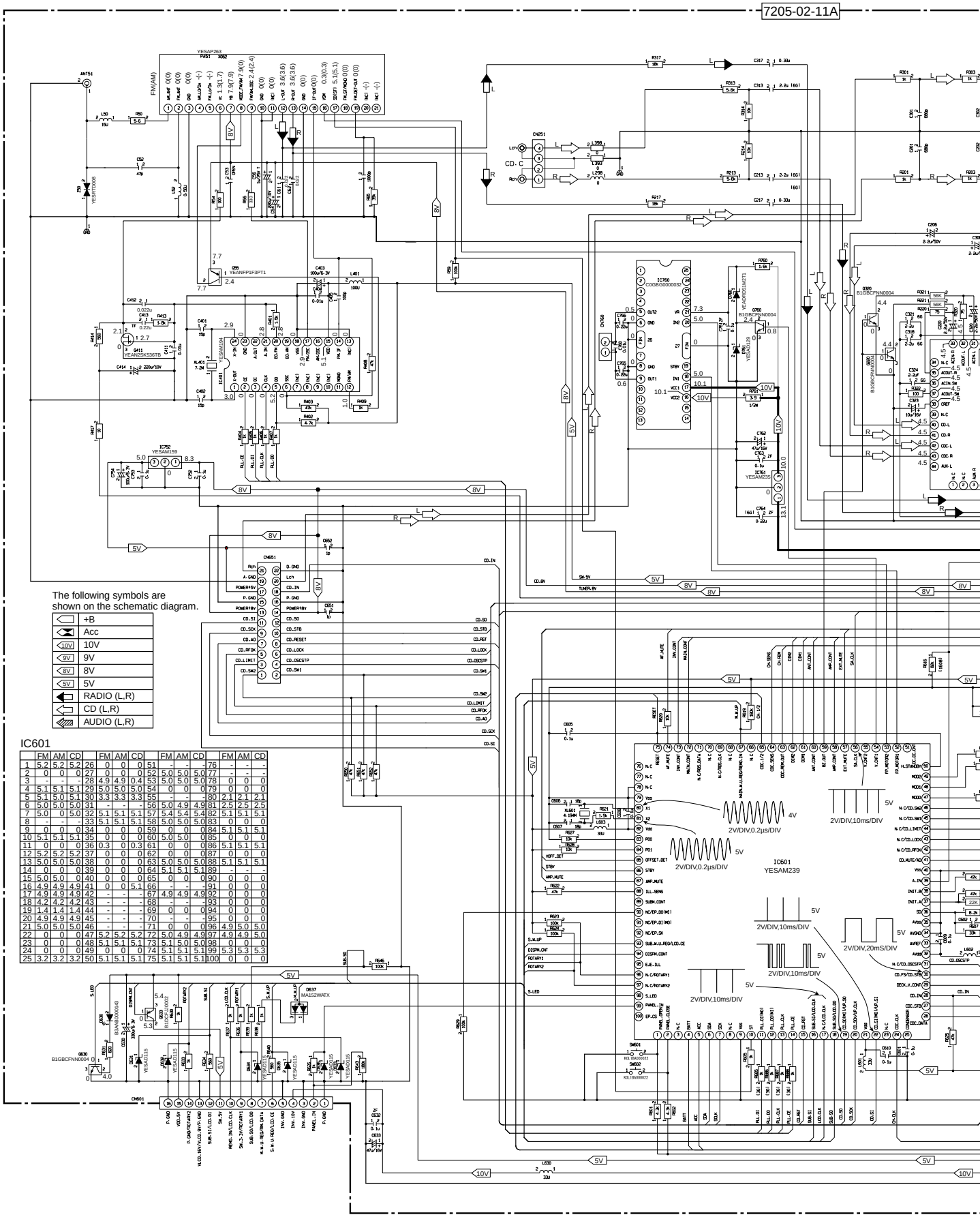

IC601

	FM	AM	CD		FM	AM	CD		FM	AM	CD		FM	AM	CD
1	5.2	5.2	5.2	26	0	0	0	51	-	-	-	76	-	-	-
2	0	0	0	27	0	0	0	52	5.0	5.0	5.0	77	-	-	-
3	-	-	-	28	4.9	4.9	0.4	53	5.0	5.0	5.0	78	0	0	0
4	5.1	5.1	5.1	29	5.0	5.0	5.0	54	0	0	0	79	0	0	0
5	5.1	5.0	5.1	30	3.3	3.3	3.3	55	-	-	-	80	2.1	2.1	2.1
6	5.0	5.0	5.0	31	-	-	-	56	5.0	4.9	4.9	81	2.5	2.5	2.5
7	5.0	0	5.0	32	5.1	5.1	5.1	57	5.4	5.4	5.4	82	5.1	5.1	5.1
8	-	-	-	33	5.1	5.1	5.1	58	5.0	5.0	5.0	83	0	0	0
9	0	0	0	34	0	0	0	59	0	0	0	84	5.1	5.1	5.1
10	5.1	5.1	5.1	35	0	0	0	60	5.0	5.0	0	85	0	0	0
11	0	0	0	36	0.3	0	0.3	61	0	0	0	86	5.1	5.1	5.1
12	5.2	5.2	5.2	37	0	0	0	62	0	0	0	87	0	0	0
13	5.0	5.0	5.0	38	0	0	0	63	5.0	5.0	5.0	88	5.1	5.1	5.1
14	0	0	0	39	0	0	0	64	5.1	5.1	5.1	89	-	-	-
15	5.0	5.0	0	40	0	0	0	65	0	0	0	90	0	0	0
16	4.9	4.9	4.9	41	0	0	5.1	66	-	-	-	91	0	0	0
17	4.9	4.9	4.9	42	-	-	-	67	4.9	4.9	4.9	92	0	0	0
18	4.2	4.2	4.2	43	-	-	-	68	-	-	-	93	0	0	0
19	1.4	1.4	1.4	44	-	-	-	69	0	0	0	94	0	0	0
20	4.9	4.9	4.9	45	-	-	-	70	-	-	-	95	0	0	0
21	5.0	5.0	5.0	46	-	-	-	71	0	0	0	96	4.9	5.0	5.0
22	0	0	0	47	5.2	5.2	5.2	72	5.0	4.9	4.9	97	4.9	4.9	5.0
23	0	0	0	48	5.1	5.1	5.1	73	5.1	5.0	5.0	98	0	0	0
24	0	0	0	49	0	0	0	74	5.1	5.1	5.1	99	5.3	5.3	5.3
25	3.2	3.2	3.2	50	5.1	5.1	5.1	75	5.1	5.1	5.1	100	0	0	0

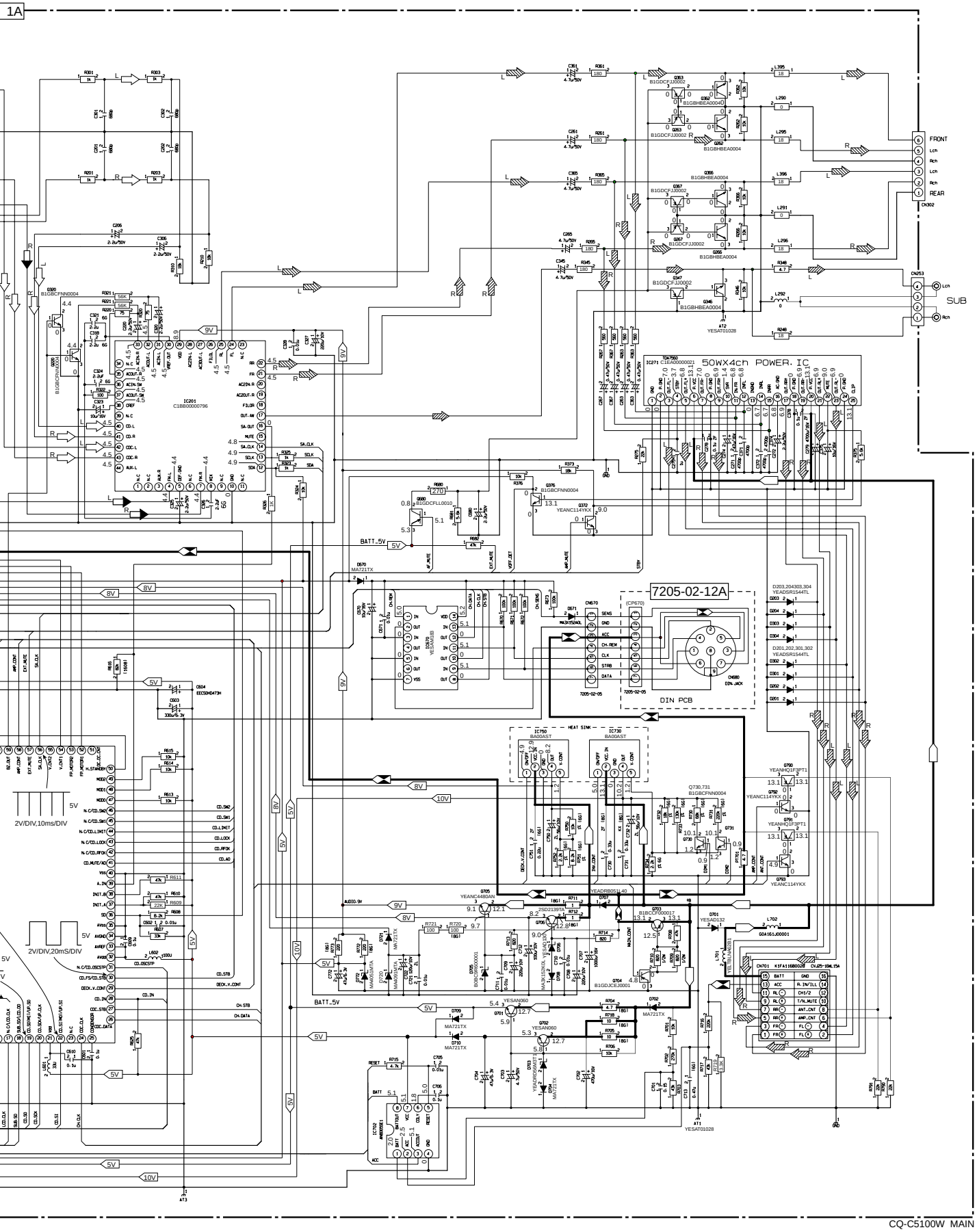

CQ-C5100W MAIN

23 SCHEMATIC DIAGRAM

23.1. Main Block [CQ-C5400W/C5300W]

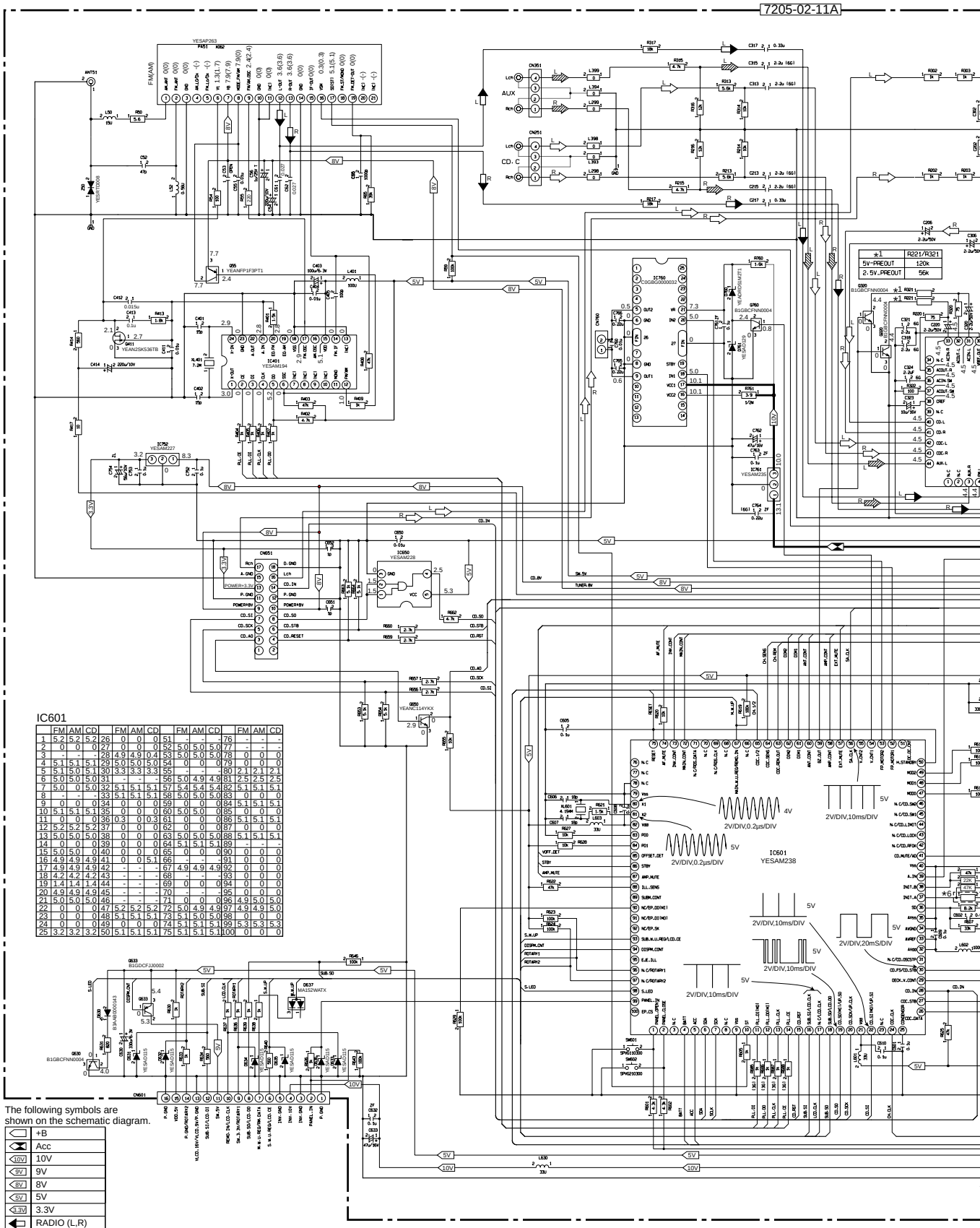

-11A

		*2 R345/R261/R361/R265/R365	3* L295/L395/L296/L396/R248/R348	*4 R247,R251,R351,R257,R357,R770	*5 D770/D771
CQ-C5400W	5V-PREOUT	56 ohms	4.7 ohms	OPEN	MA721TX
CQ-C5300W	2.5V_PREOUT	180 ohms	18 ohms	0	OPEN

*1	R221/R321
5V-PREOUT	120k
2.5V_PREOUT	56k

*6	R609
CQ-C5400W	OPEN
CQ-C5300W	22K

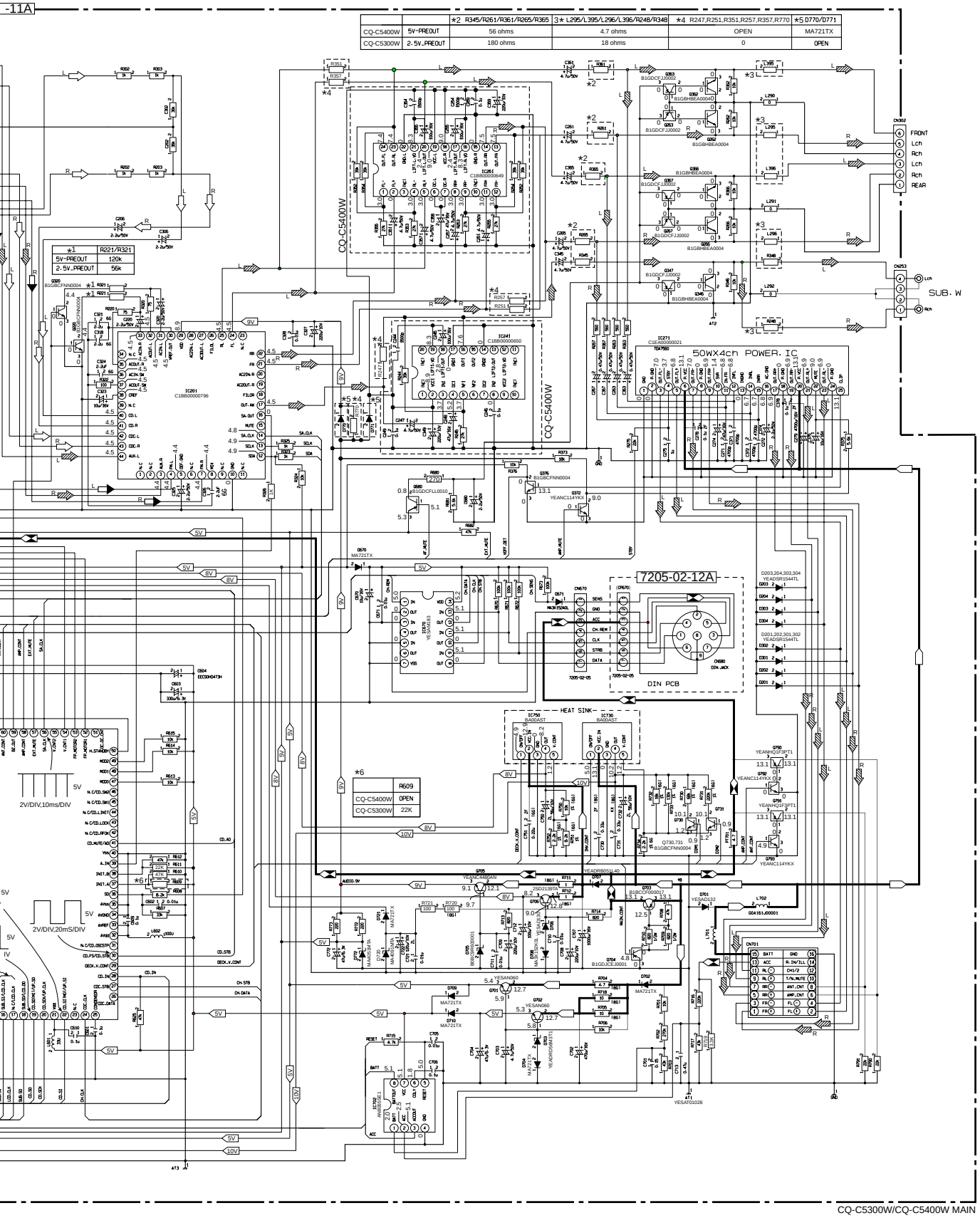

CQ-C5300W/CQ-C5400W MAIN

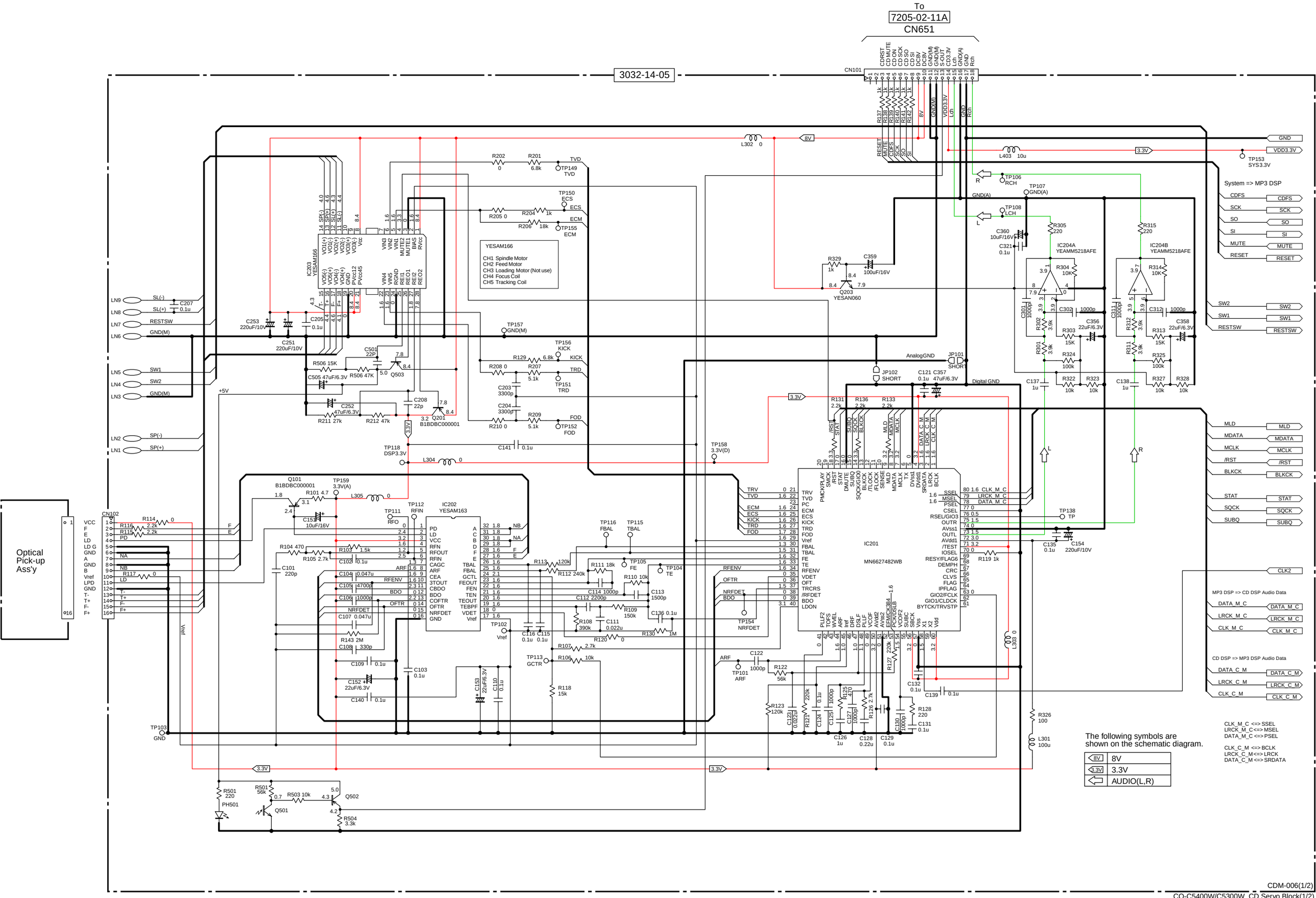
To
7205-02-11A
CN651
3032-14-05
CN101
CN102
Optical Pick-up Ass'y
IC203 YESAM166
YESAM166
CH1 Spindle Motor
CH2 Feed Motor
CH3 Loading Motor (Not use)
CH4 Focus Coil
CH5 Tracking Coil
IC202 YESAM163
IC201 MN6627482WB
IC204A YEAMM5218AFE
IC204B YEAMM5218AFE
System => MP3 DSP
MP3 DSP => CD DSP Audio Data
CD DSP => MP3 DSP Audio Data
CLK_M_C <=> SSEL
LRCK_M_C <=> MSEL
DATA_M_C <=> PSEL
CLK_C_M <=> BCLK
LRCK_C_M <=> LRCK
DATA_C_M <=> SRDATA
The following symbols are shown on the schematic diagram.
8V 8V
3.3V 3.3V
AUDIO(L,R)
CDM-006(1/2)
CQ-C5400W/C5300W CD Servo Block(1/2)

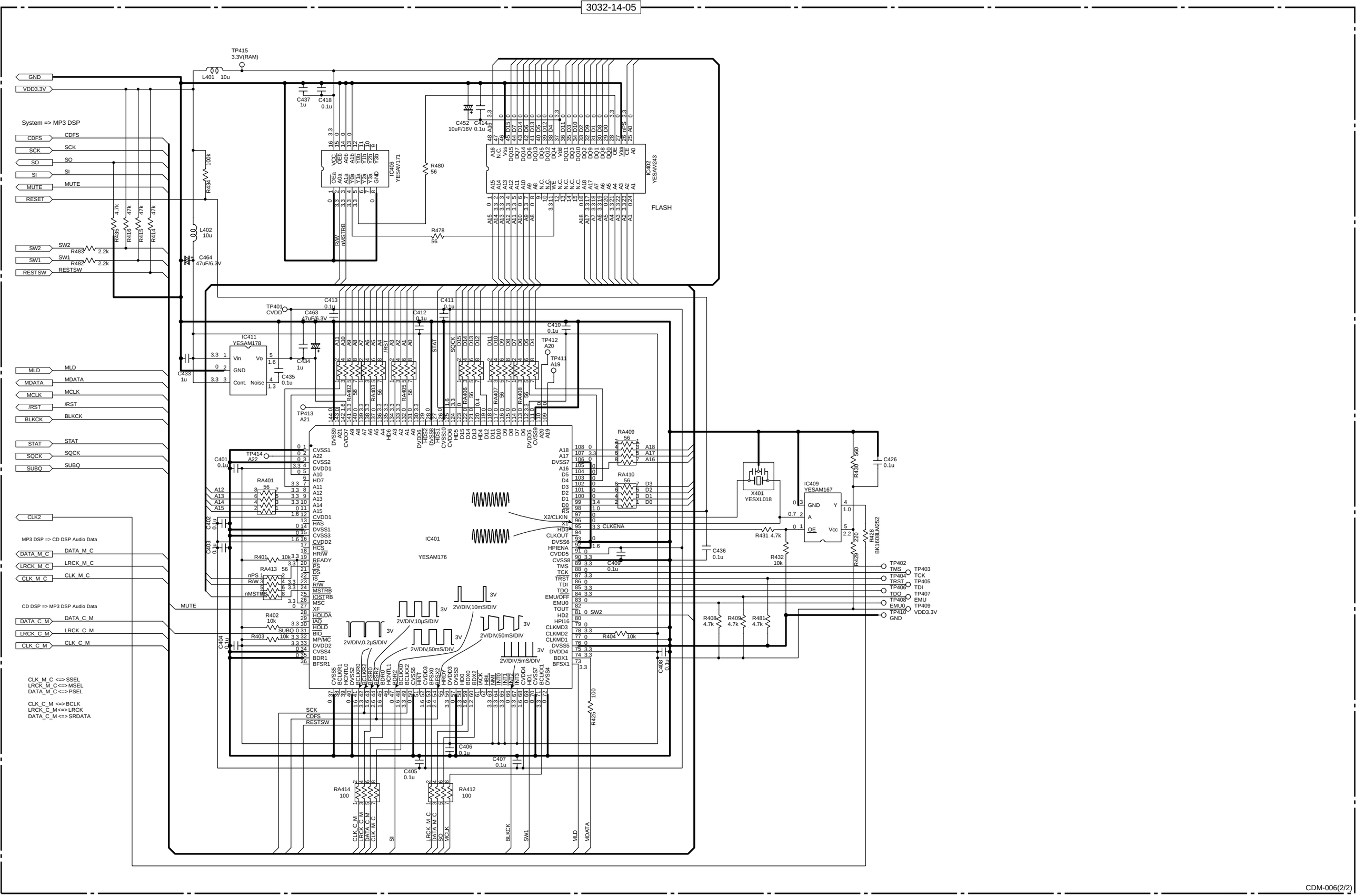
GND
VDD3.3V
System => MP3 DSP
CDFS
SCK
SO
SI
MUTE
RESET
SW2
SW1
RESTSW
MLD
MDATA
MCLK
/RST
BLKCK
STAT
SQCK
SUBQ
CLK2
MP3 DSP => CD DSP Audio Data
DATA_M_C
LRCK_M_C
CLK_M_C
CD DSP => MP3 DSP Audio Data
DATA_C_M
LRCK_C_M
CLK_C_M
CLK_M_C <=> SSEL
LRCK_M_C <=> MSEL
DATA_M_C <=> PSEL
CLK_C_M <=> BCLK
LRCK_C_M <=> LRCK
DATA_C_M <=> SRDATA
TP415
3.3V(RAM)
L401 10u
C437 1u
C418 0.1u
C452 10uF/16V
C414 0.1u
IC406
YESAM171
IC402
YESAM243
FLASH
R480 56
R478 56
R434 100k
L402 10u
C464 47uF/6.3V
R483 2.2k
R482 2.2k
R435 4.7k
R416 47k
R415 47k
R414 47k
TP401
CVDD
C463 47uF/6.3V
C413 0.1u
C412 0.1u
C411 0.1u
C410 0.1u
IC411
YESAM178
Vin
Vo
GND
Cont.
Noise
C433 1u
C434 1u
C435 0.1u
TP412
A20
TP411
A19
TP413
A21
TP414
A22
C401 0.1u
C402 0.1u
C403 0.1u
C404 0.1u
RA401 56
RA409 56
RA410 56
RA413 56
RA414 100
RA412 100
IC401
YESAM176
X401
YESXL018
IC409
YESAM167
C426 0.1u
R430 560
R428 BK1608LM252
R429 220
R431 4.7k
R432 10k
C436 0.1u
C409 0.1u
R408 4.7k
R409 4.7k
R481 4.7k
R404 10k
R401 10k
R402 10k
R403 10k
C408 0.1u
R425 100
TP402 TMS
TP403 TCK
TP404 TRST
TP405 TDI
TP406 TDO
TP407 EMU
TP408 EMU0
TP409 VDD3.3V
TP410 GND
2V/DIV,10μS/DIV
2V/DIV,0.2μS/DIV
2V/DIV,50mS/DIV
2V/DIV,10mS/DIV
2V/DIV,5mS/DIV
3V
C406 0.1u
C405 0.1u
C407 0.1u

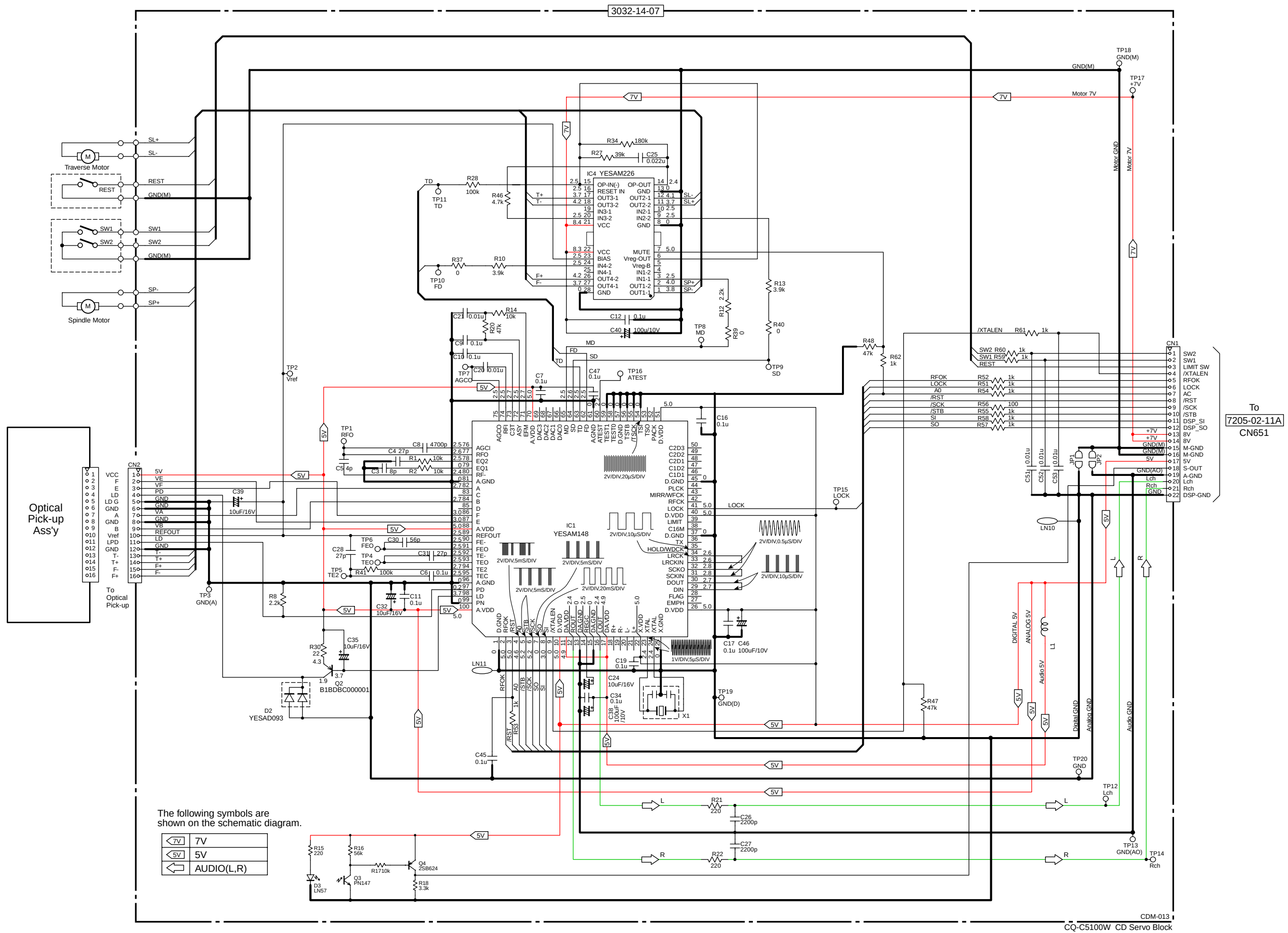
Traverse Motor
Spindle Motor
Optical Pick-up Ass'y
To Optical Pick-up
CN2
IC4 YESAM226
IC1 YESAM148
Q2 B1BDBC000001
D2 YESAD093
X1
CN1
To 7205-02-11A CN651
The following symbols are shown on the schematic diagram.
7V
5V
AUDIO(L,R)
CDM-013
CQ-C5100W CD Servo Block

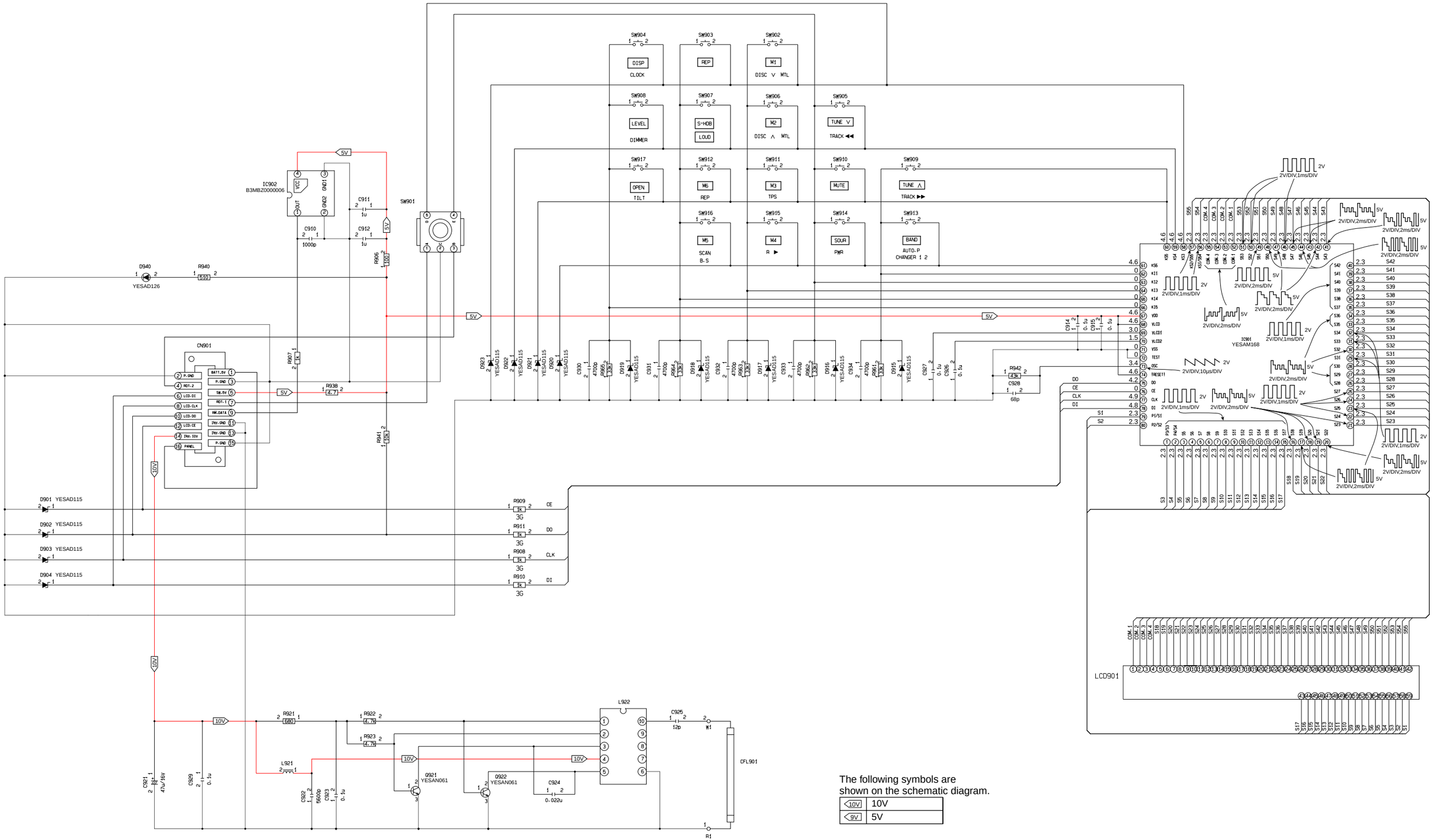

The following symbols are shown on the schematic diagram.

10V	10V
9V	5V

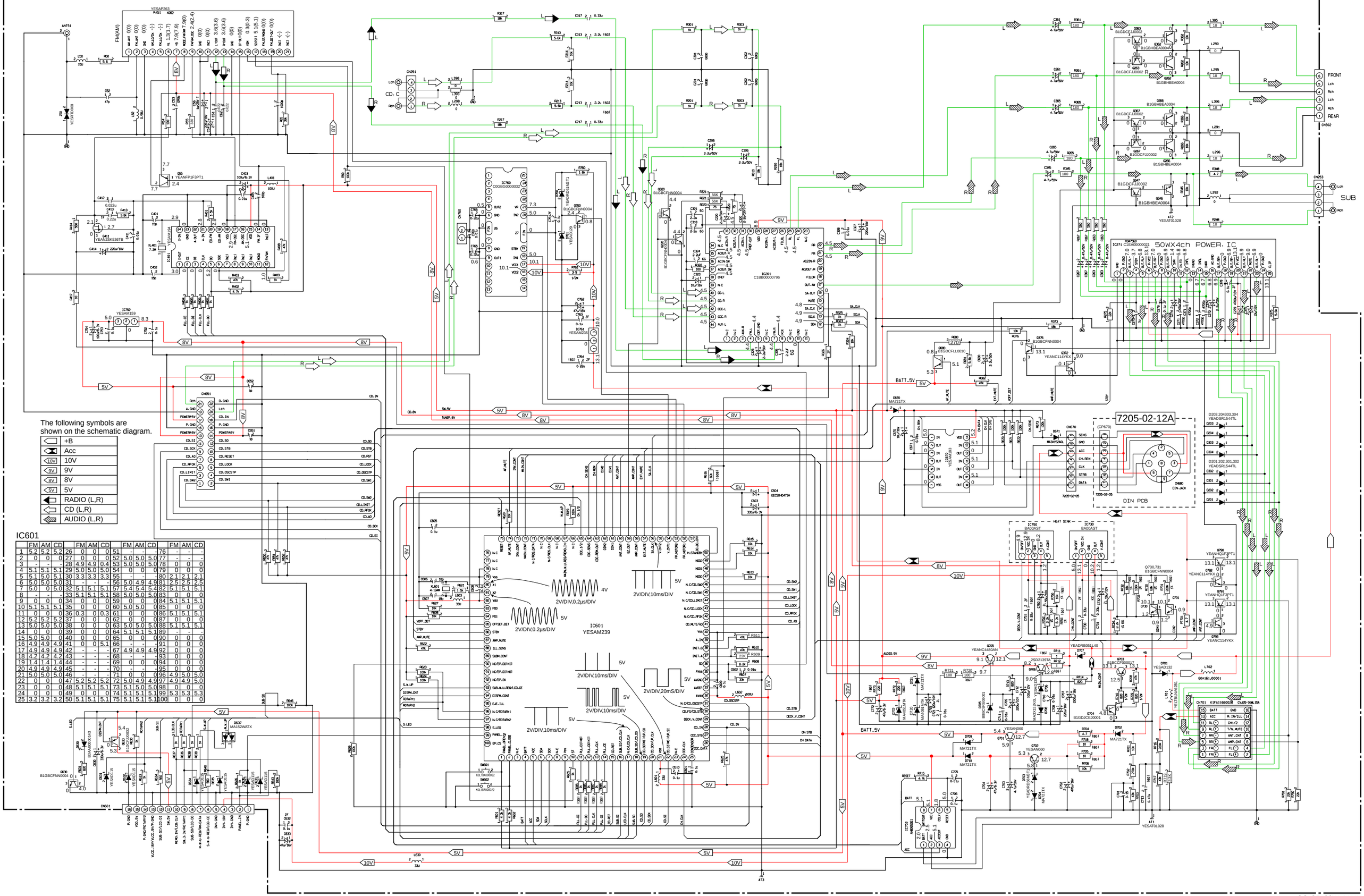

The following symbols are shown on the schematic diagram.

	+B
	Acc
10V	10V
9V	9V
8V	8V
5V	5V
	RADIO (L,R)
	CD (L,R)
	AUDIO (L,R)

IC601

	FM		AM		CD		FM		AM		CD		FM		AM		CD	
1	5.2	5.2	5.2	26	0	0	0	51	-	-	-	76	-	-	-	-	-	-
2	0	0	0	27	0	0	0	52	5.0	5.0	5.0	77	-	-	-	-	-	-
3	-	-	-	28	4.9	4.9	0.4	53	5.0	5.0	5.0	78	0	0	0			
4	5.1	5.1	5.1	29	5.0	5.0	5.0	54	0	0	0	79	0	0	0			
5	5.1	5.0	5.1	30	3.3	3.3	3.3	55	-	-	-	80	2.1	2.1	2.1			
6	5.0	5.0	5.0	31	-	-	-	56	5.0	4.9	4.9	81	2.5	2.5	2.5			
7	5.0	0	5.0	32	5.1	5.1	5.1	57	5.4	5.4	5.4	82	5.1	5.1	5.1			
8	-	-	-	33	5.1	5.1	5.1	58	5.0	5.0	5.0	83	0	0	0			
9	0	0	0	34	0	0	0	59	0	0	0	84	5.1	5.1	5.1			
10	5.1	5.1	5.1	35	0	0	0	60	5.0	5.0	0	85	0	0	0			
11	0	0	0	36	0.3	0	0.3	61	0	0	0	86	5.1	5.1	5.1			
12	5.2	5.2	5.2	37	0	0	0	62	0	0	0	87	0	0	0			
13	5.0	5.0	5.0	38	0	0	0	63	5.0	5.0	5.0	88	5.1	5.1	5.1			
14	0		0	39	0	0	0	64	5.1	5.1	5.1	89	-		-			
15	5.0	5.0	0	40	0	0	0	65	0	0	0	90	0	0	0			
16	4.9	4.9	4.9	41	0	0	0	66	-	-	-	91	0	0	0			
17	4.9	4.9	4.9	42	-	-	-	67	4.9	4.9	4.9	92	0	0	0			
18	4.2	4.2	4.2	43	-	-	-	68	-	-	-	93	0	0	0			
19	1.4	1.4	1.4	44	-	-	-	69	0	0	0	94	0	0	0			
20	4.9	4.9	4.9	45	-	-	-	70	-	-	-	95	0	0	0			
21	5.0	5.0	5.0	46	-	-	-	71	0	0	0	96	4.9	5.0	5.0			
22	0	0	0	47	5.2	5.2	5.2	72	5.0	4.9	4.9	97	4.9	4.9	5.0			
23	0	0	0	48	5.1	5.1	5.1	73	5.1	5.0	5.0	98	0	0	0			
24	0	0	0	49	0	0	0	74	5.1	5.1	5.1	99	5.3	5.3	5.3			
25	3.2	3.2	3.2	50	5.1	5.1	5.1	75	5.1	5.1	5.1	100	0	0	0			

7205-02-11A

		★2 R345/R261/R361/R265/R365	3★ L295/L395/L296/L396/R248/R348	★4 R247,R251,R351,R257,R357,R770	★5 D770/D771
CQ-C5400W	5V-PREOUT	56 ohms	4.7 ohms	OPEN	MA721TX
CQ-C5300W	2.5V_PREOUT	180 ohms	18 ohms	0	OPEN

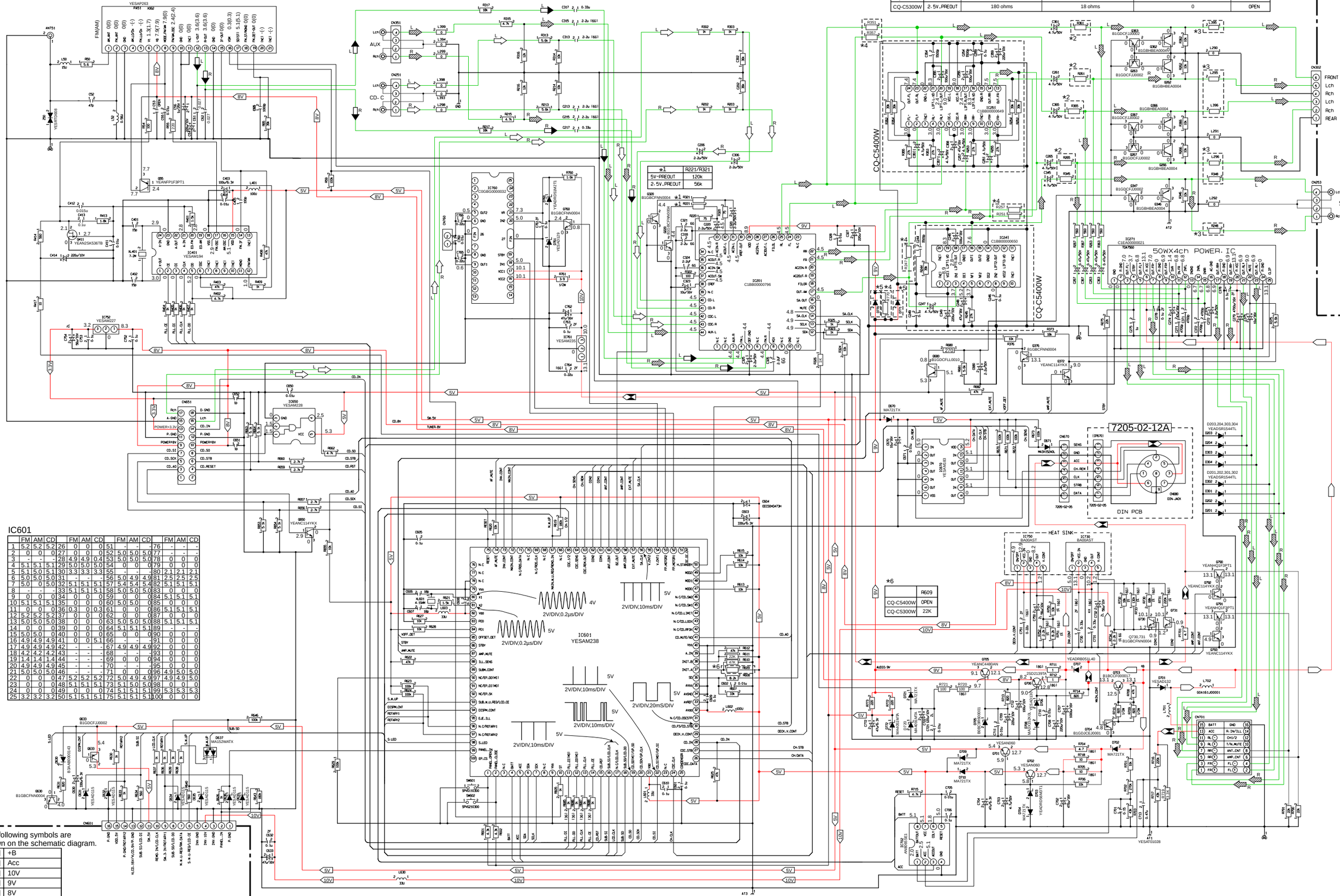

★1	R221/R321
5V-PREOUT	120k
2.5V_PREOUT	56k

★6	R609
CQ-C5400W	OPEN
CQ-C5300W	22K

IC601

| | FM | | | AM | | | CD | | |

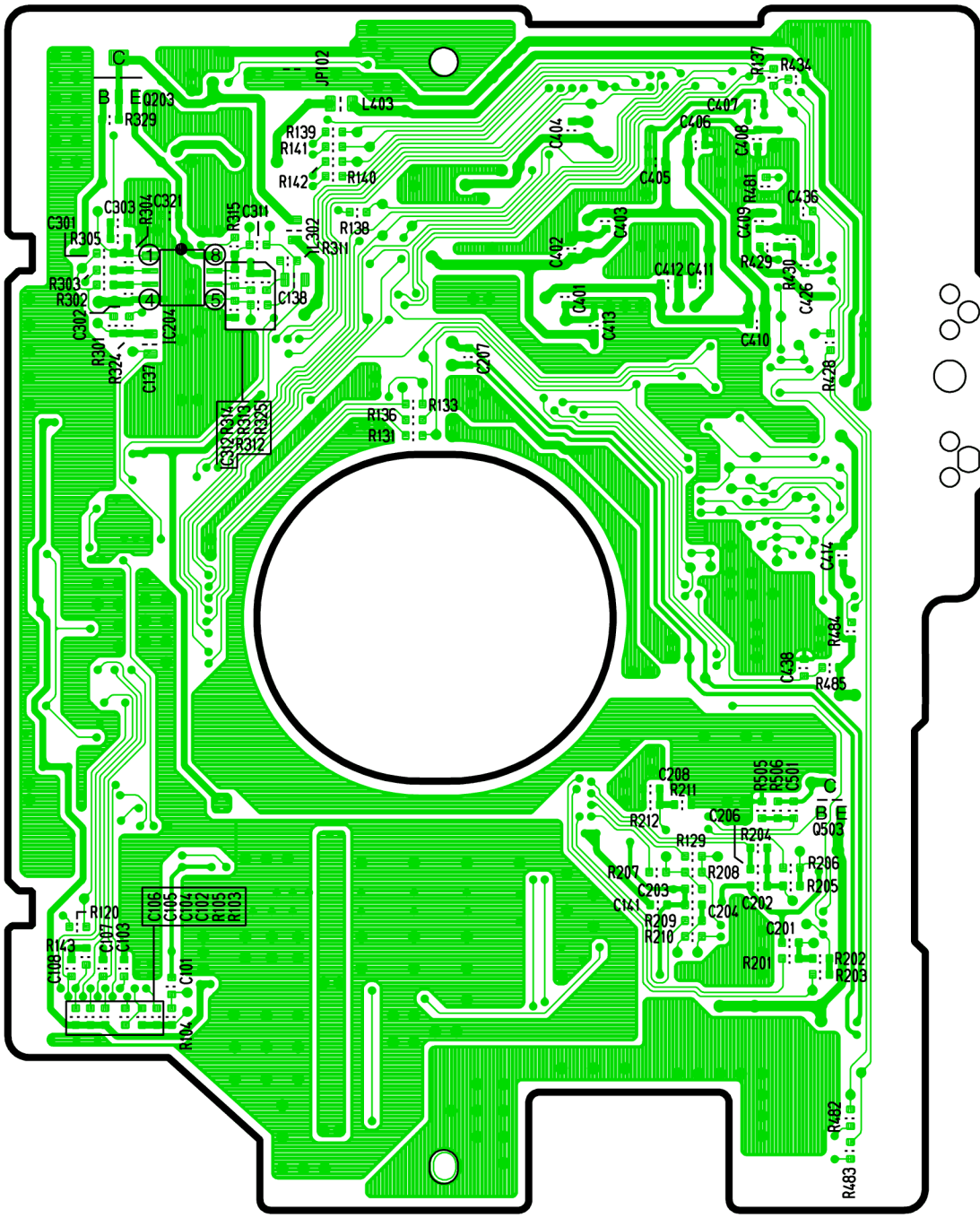

[3032-14-05] [Bottom View]

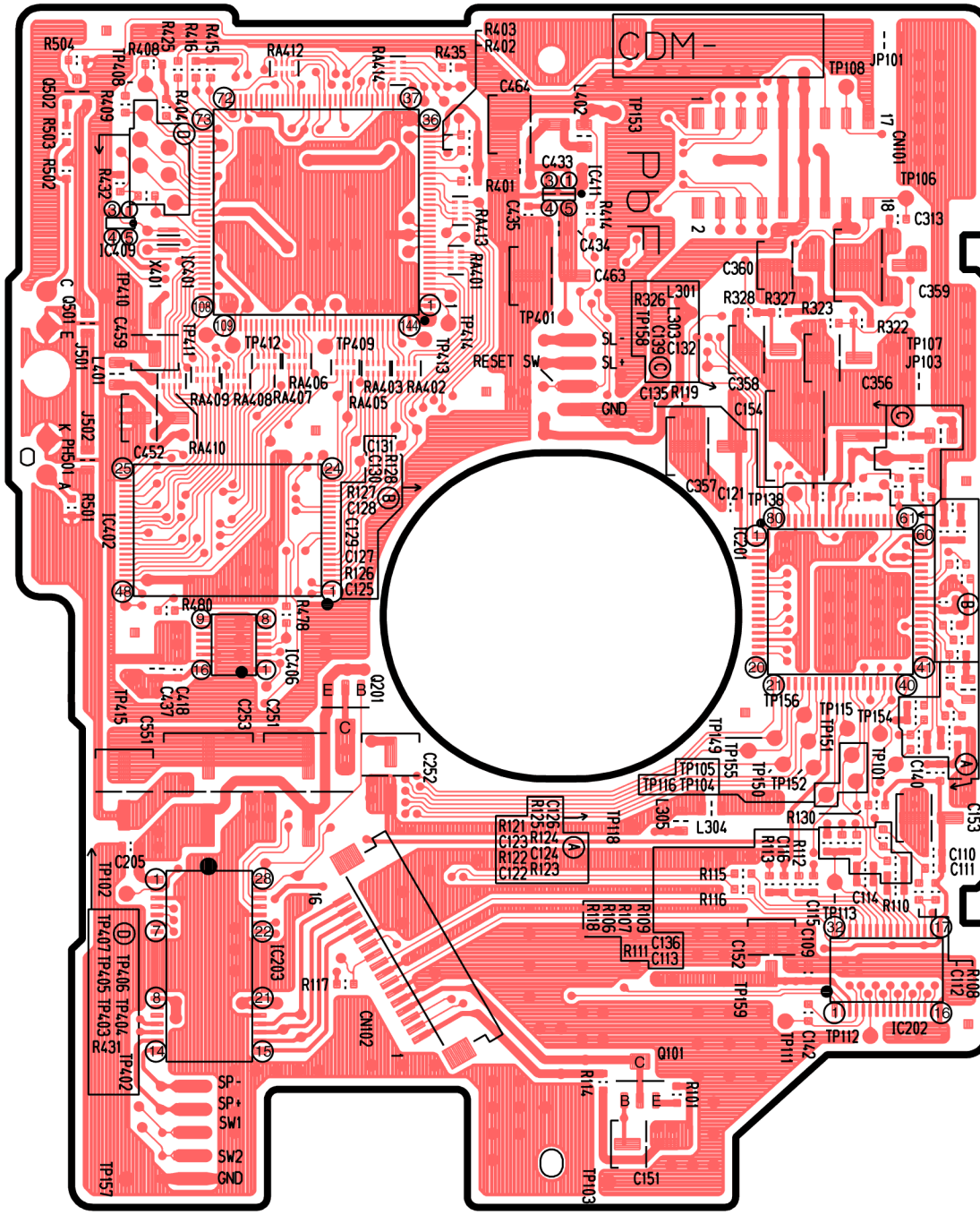

[3032-14-05] [Top View]

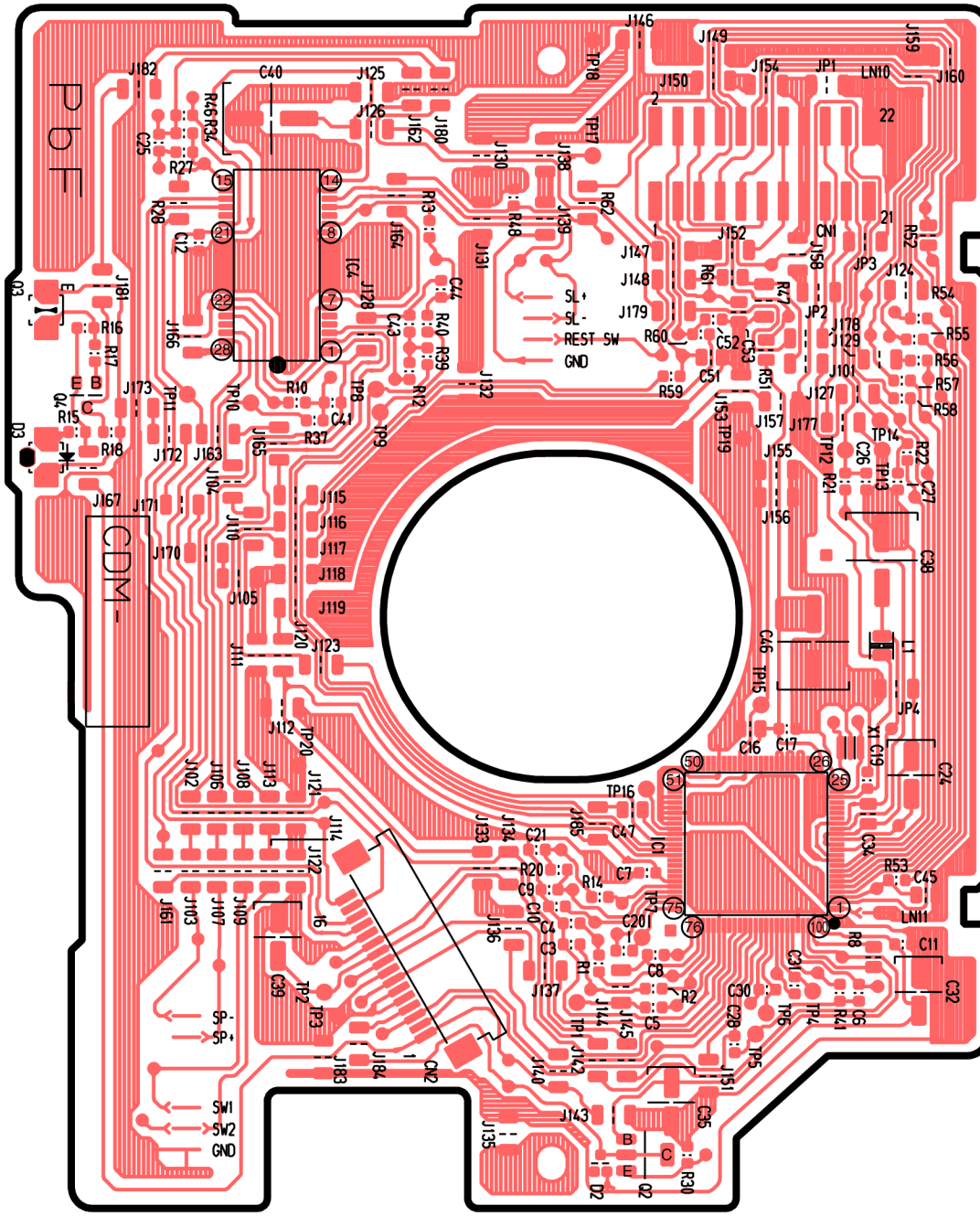

[3032-14-07] [Top View]

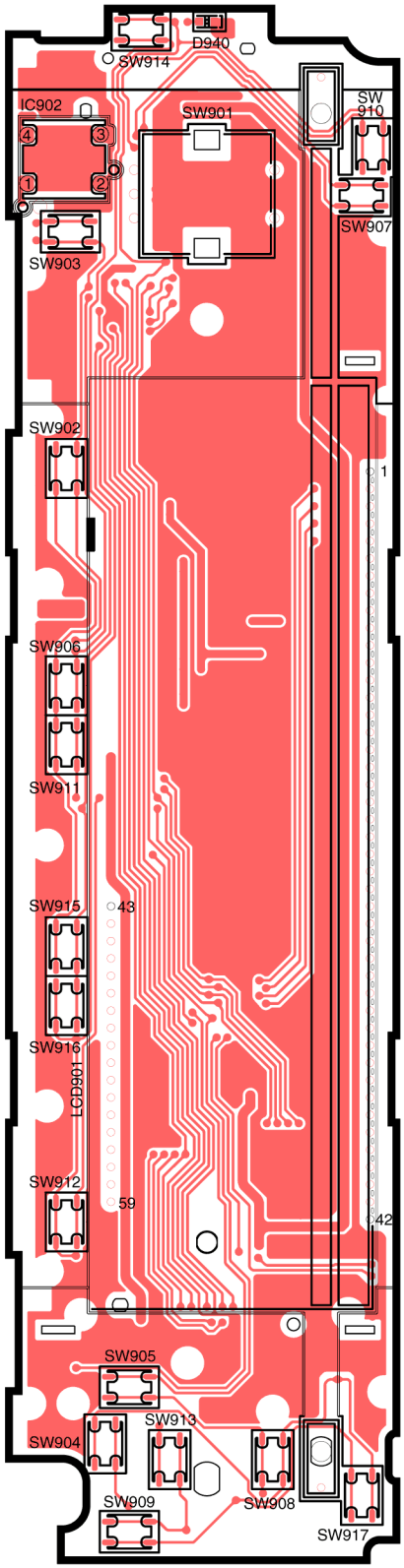

[7205-05-02] [Top View]

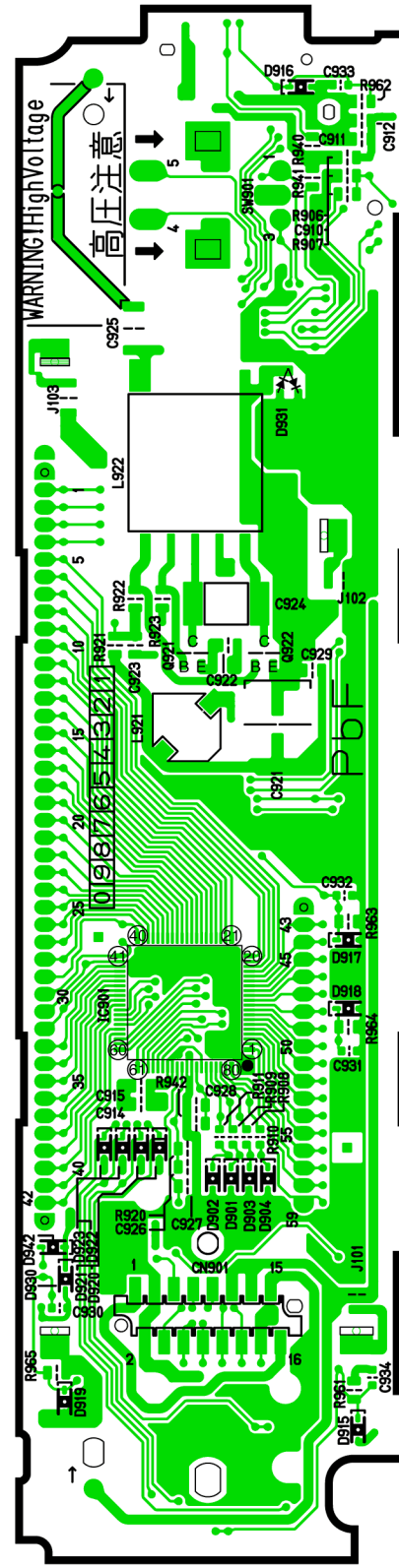

[7205-05-02] [Bottom View]

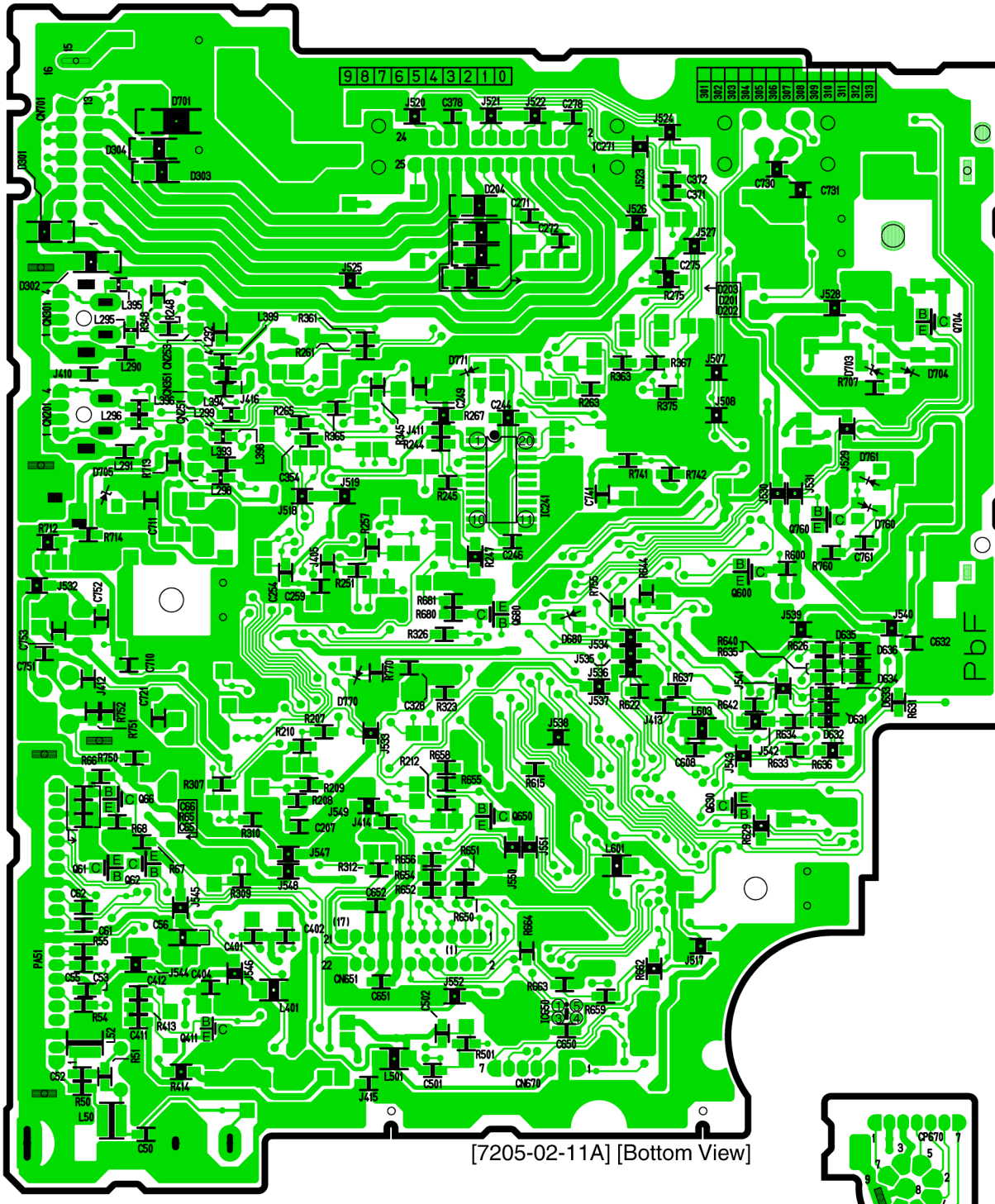

[7205-02-11A] [Bottom View]

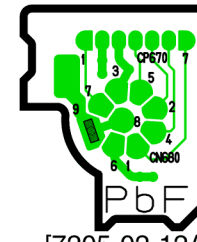

[7205-02-12A]
[Bottom View]

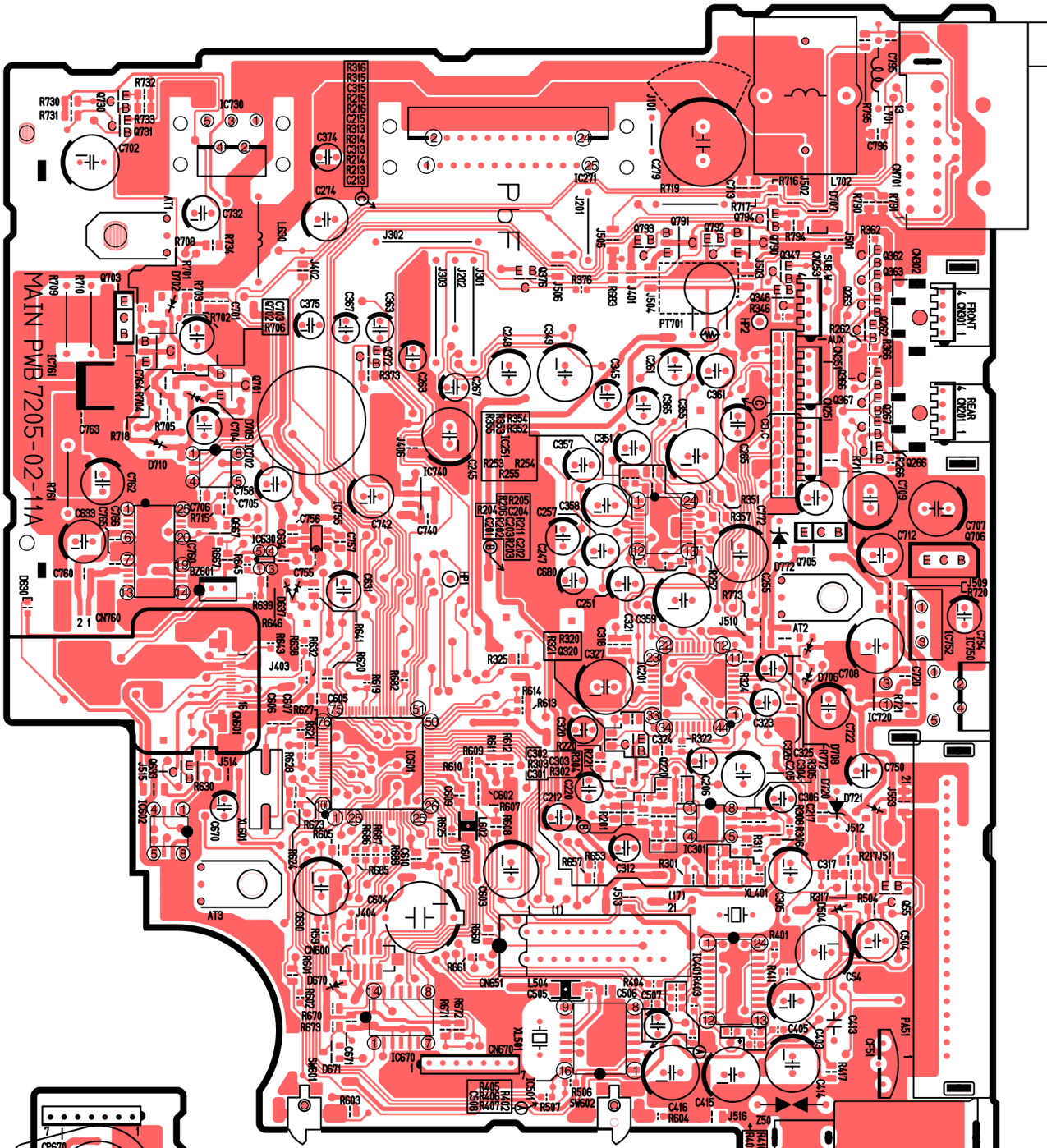

[7205-02-11A] [Top View]

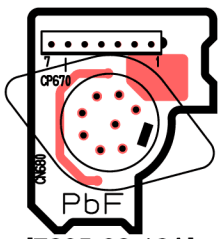

[7205-02-12A]
[Top View]

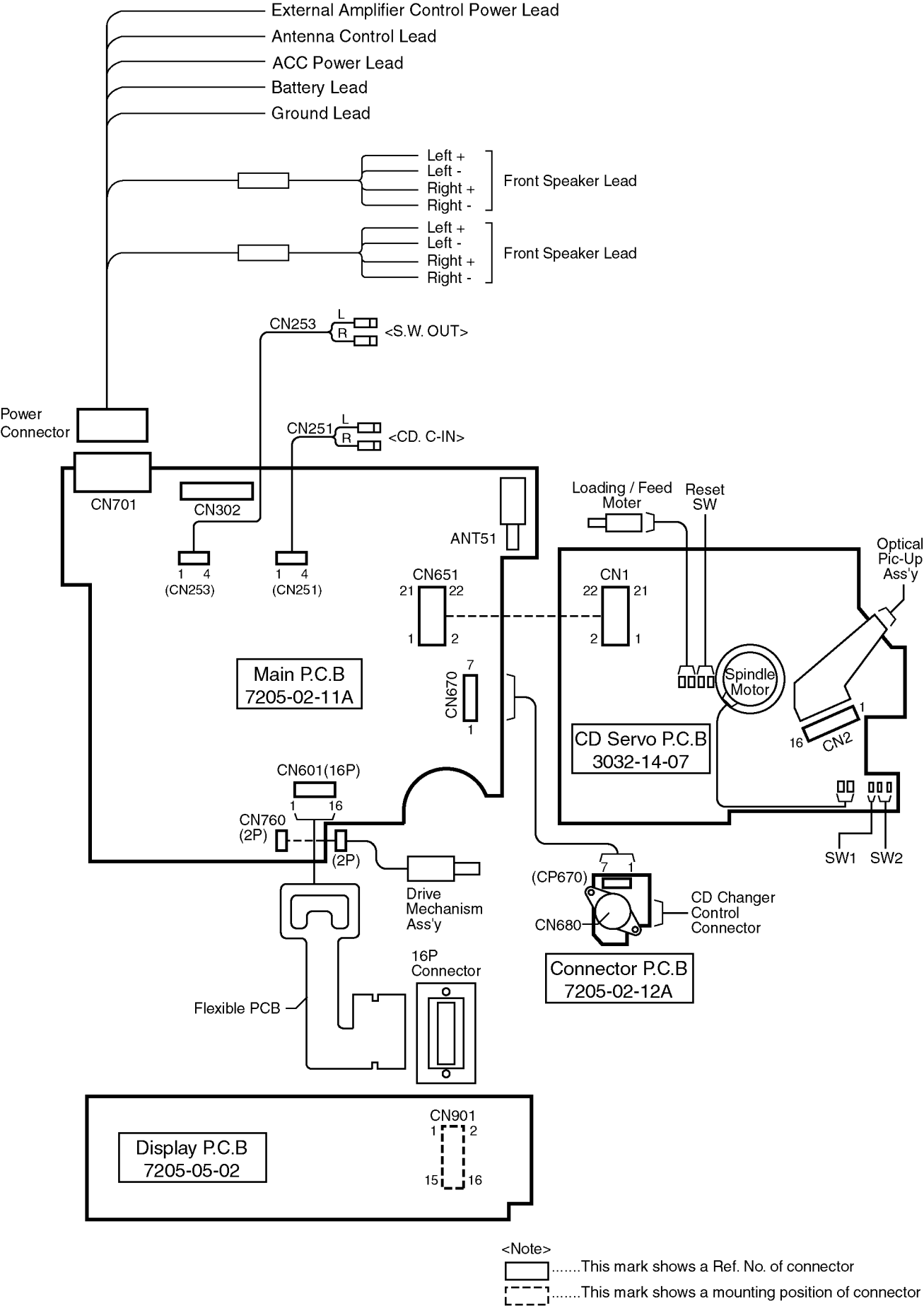
External Amplifier Control Power Lead
Antenna Control Lead
ACC Power Lead
Battery Lead
Ground Lead
Left +
Left -
Right +
Right -
Front Speaker Lead
Left +
Left -
Right +
Right -
Front Speaker Lead
CN253
L
R
<S.W. OUT>
Power Connector
CN251
L
R
<CD. C-IN>
CN701
CN302
ANT51
1 4
(CN253)
1 4
(CN251)
CN651
21 22
1 2
Loading / Feed Moter
Reset SW
CN1
22 21
2 1
Optical Pic-Up Ass'y
Main P.C.B
7205-02-11A
CN670
7
1
Spindle Motor
CD Servo P.C.B
3032-14-07
1
16
CN2
CN601(16P)
1 16
CN760
(2P)
(2P)
SW1
SW2
Drive Mechanism Ass'y
(CP670)
7 1
CN680
CD Changer Control Connector
Connector P.C.B
7205-02-12A
16P Connector
Flexible PCB
Display P.C.B
7205-05-02
CN901
1 2
15 16
<Note>
.....This mark shows a Ref. No. of connector
.....This mark shows a mounting position of connector

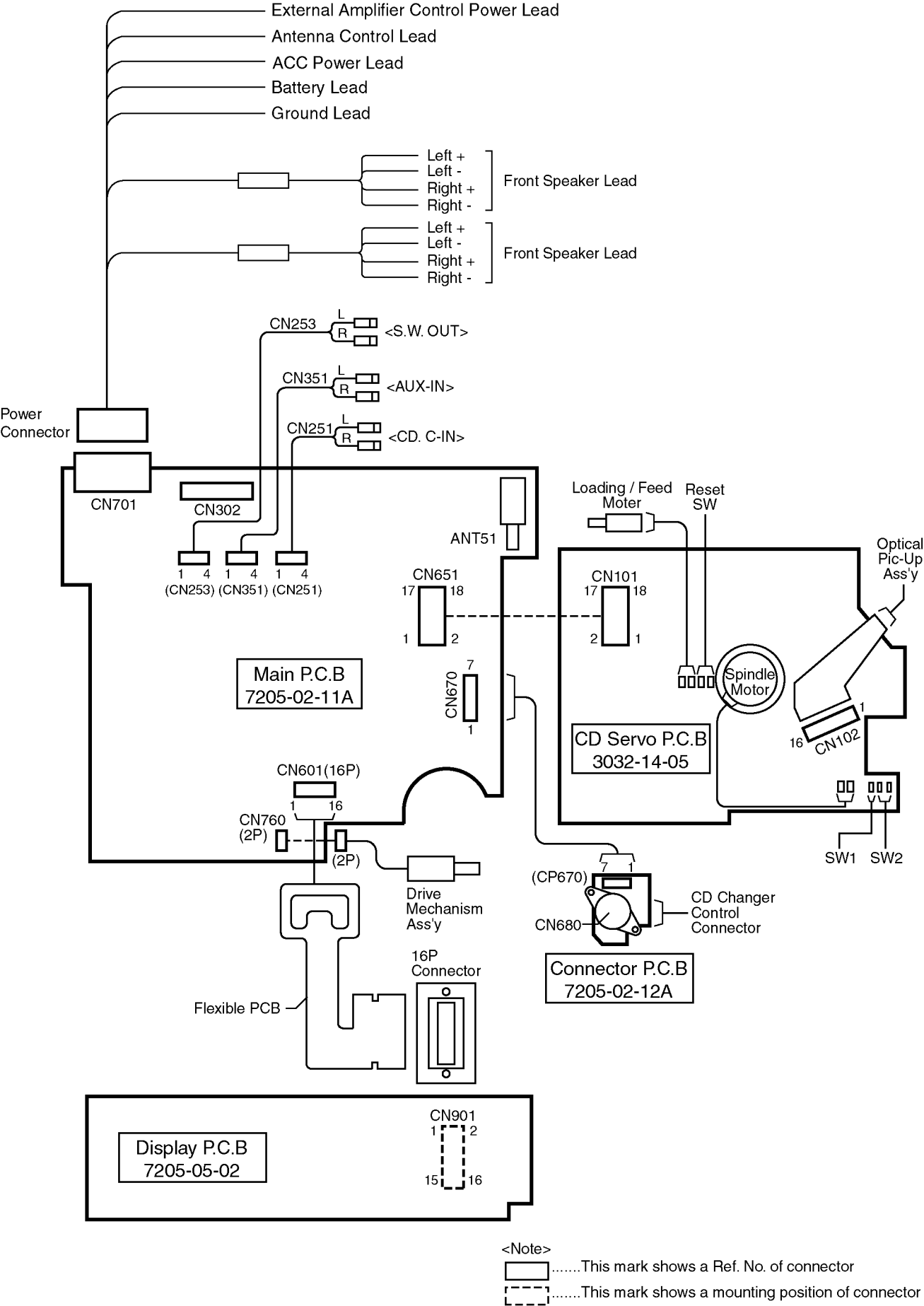
External Amplifier Control Power Lead
Antenna Control Lead
ACC Power Lead
Battery Lead
Ground Lead
Left +
Left -
Right +
Right -
Front Speaker Lead
Left +
Left -
Right +
Right -
Front Speaker Lead
CN253
L
R
<S.W. OUT>
CN351
L
R
<AUX-IN>
CN251
L
R
<CD. C-IN>
Power Connector
CN701
CN302
ANT51
1 4 1 4 1 4
(CN253) (CN351) (CN251)
CN651
17 18
1 2
CN101
17 18
2 1
Loading / Feed Motor
Reset SW
Optical Pic-Up Ass'y
Spindle Motor
CN102
16 1
Main P.C.B
7205-02-11A
CN670
7
1
CD Servo P.C.B
3032-14-05
CN601(16P)
1 16
CN760
(2P)
(2P)
Drive Mechanism Ass'y
SW1 SW2
(CP670)
7 1
CN680
CD Changer Control Connector
Connector P.C.B
7205-02-12A
16P Connector
Flexible PCB
Display P.C.B
7205-05-02
CN901
1 2
15 16
<Note>
.....This mark shows a Ref. No. of connector
.....This mark shows a mounting position of connector