CLK
ALM
VOL
AUX
MODE
Panasonic
HD SERIES
10.27
FM22
AM 2:24
DISC
1
2
3
4
5
6
SCAN
REP
MUTE
SCAN
TUNE
SEEK
disc

178mm
50mm
150mm
CLK
ALM
VOL
AUX
MODE
BAND
APM
Panasonic
HD SERIES
102.7 FM22 AM 2:24
DISC
1
2
3
4
5
6
SCAN
REP
S-HBB
MUTE
SCAN
TUNE
SEEK
RDM

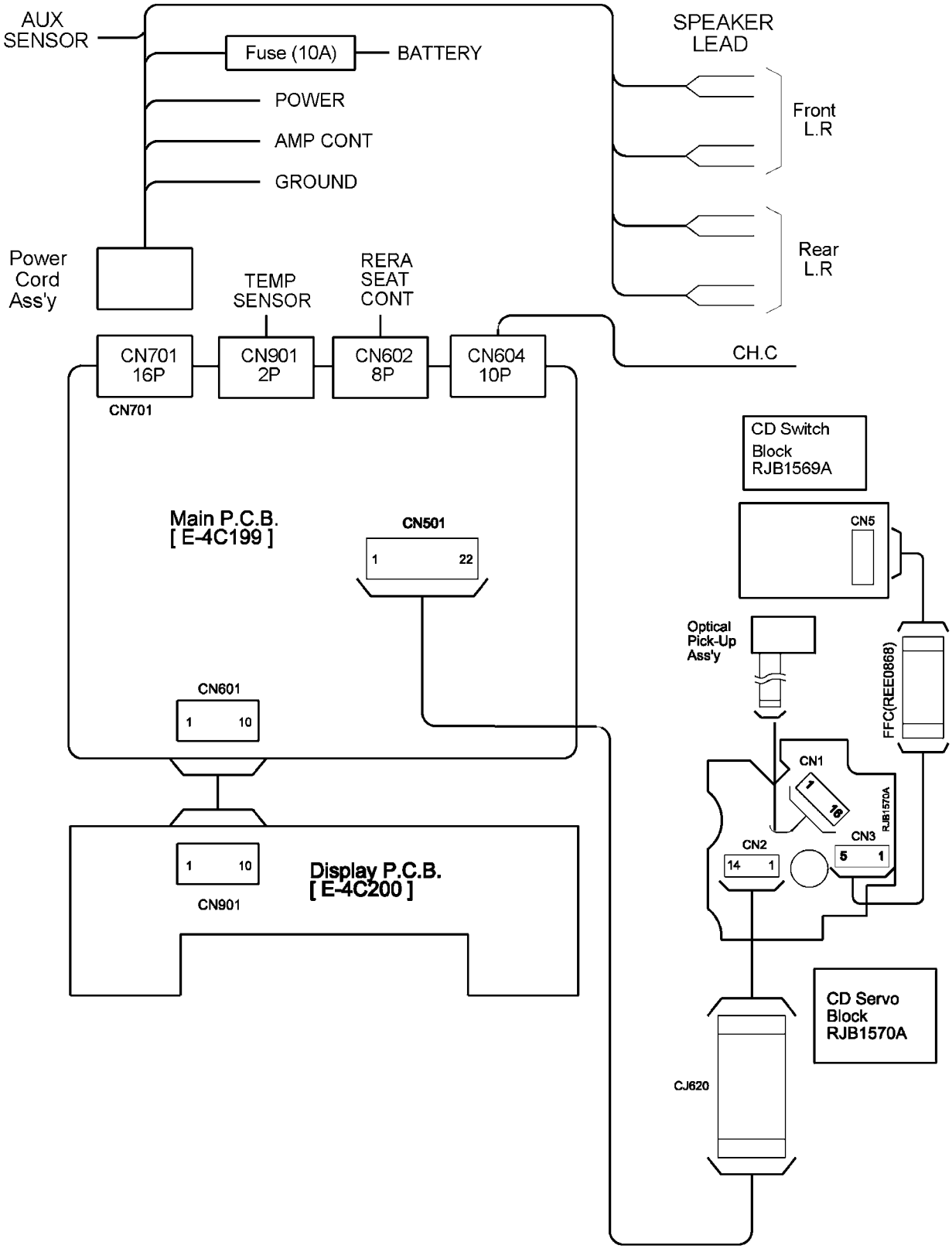
AUX SENSOR
Fuse (10A)
BATTERY
POWER
AMP CONT
GROUND
SPEAKER LEAD
Front L.R
Rear L.R
Power Cord Ass'y
TEMP SENSOR
RERA SEAT CONT
CN701 16P
CN901 2P
CN602 8P
CN604 10P
CH.C
CN701
CD Switch Block RJB1569A
CN5
Main P.C.B. [E-4C199]
CN501
1
22
Optical Pick-Up Ass'y
FFC(REE0868)
CN601
1
10
CN1
1
16
RJB1570A
CN3
5
1
CN2
14
1
1
10
CN901
Display P.C.B. [E-4C200]
CD Servo Block RJB1570A
CJ620

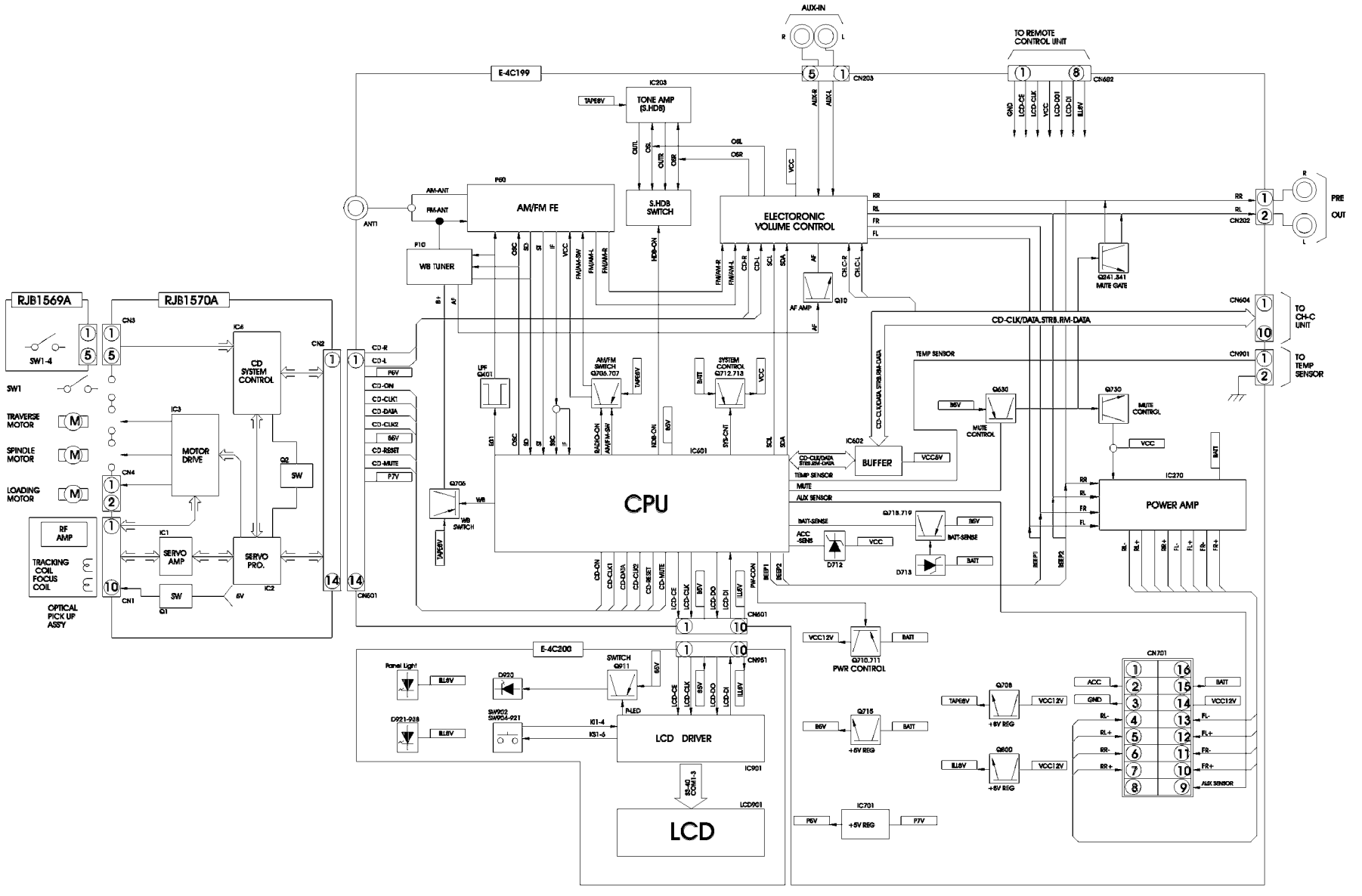
AUX-IN
R
L
TO REMOTE CONTROL UNIT
E-4C199
CN203
CN602
GND
LCD-CE
LCD-CLK
VCC
LCD-DO
LCD-DI
ILL6V
IC203
TONE AMP (S.HDB)
TAPE6V
OUTL
OSL
OUTR
OSR
OSL
OSR
AUX-R
AUX-L
VCC
AM-ANT
FM-ANT
ANT1
P60
AM/FM FE
S.HDB SWITCH
ELECTORONIC VOLUME CONTROL
RR
RL
FR
FL
CN202
PRE OUT
P10
WB TUNER
OSC
SD
SI
IF
VCC
FM/AM-SW
FM/AM-L
FM/AM-R
HDB-ON
FM/AM-R
FM/AM-L
CD-R
CD-L
SCL
SDA
AF
CH-C-R
CH-C-L
AF AMP
Q10
Q241,341
MUTE GATE
CN604
TO CH-C UNIT
CD-CLK/DATA,STRB,RM-DATA
CN901
TO TEMP SENSOR
TEMP SENSOR
RJB1569A
RJB1570A
SW1-4
SW1
CN3
IC6
CD SYSTEM CONTROL
CN2
CD-R
CD-L
P6V
CD-ON
CD-CLK1
CD-DATA
CD-CLK2
B6V
CD-RESET
CD-MUTE
P7V
TRAVERSE MOTOR
SPINDLE MOTOR
LOADING MOTOR
IC3
MOTOR DRIVE
Q2
SW
CN4
RF AMP
TRACKING COIL
FOCUS COIL
IC1
SERVO AMP
SERVO PRO.
IC2
SW
Q1
6V
CN1
OPTICAL PICK UP ASSY
LPF QX01
AM/FM SWITCH Q706,707
SYSTEM CONTROL Q712,713
BATT
VCC
B01
OSC
SD
SI
IF
SSC
IF
BAND-ON
AM/FM-SW
HDB-ON
B6V
SYS-ON
SCL
SDA
IC401
CPU
Q705
WB
WB SWITCH
TAPE6V
CD-CLK/DATA STRB,RM-DATA
TEMP SENSOR
MUTE
AUX SENSOR
BATT-SENSE
ACC -SENS
D712
VCC
Q718,719
B6V
BATT-SENSE
D713
BATT
IC602
BUFFER
VCC6V
CD-CLK/DATA STRB,RM-DATA
TEMP SENSOR
Q630
B6V
MUTE CONTROL
Q730
MUTE CONTROL
VCC
BATT
IC270
POWER AMP
RR
RL
FR
FL
RL-
RL+
RR+
FL-
FL+
FR-
FR+
BEEP1
BEEP2
CD-ON
CD-CLK1
CD-DATA
CD-CLK2
CD-RESET
CD-MUTE
LCD-CE
LCD-CLK
B6V
LCD-DO
LCD-DI
ILL6V
PW-CON
BEEP1
BEEP2
CN601
E-4C200
CN951
Panel Light
ILL6V
D920
SWITCH Q911
B6V
D921-938
ILL6V
SW902 SW904-921
K1-4
KS1-6
P-LED
LCD-CE
LCD-CLK
B6V
LCD-DO
LCD-DI
ILL6V
LCD DRIVER
IC901
SS-40 CONN 1-3
LCD901
LCD
VCC12V
BATT
Q710,711
PWR CONTROL
B6V
Q715
BATT
+5V REG
TAPE6V
Q708
VCC12V
+5V REG
ILL6V
Q800
VCC12V
+5V REG
IC701
P6V
+5V REG
P7V
CN701
ACC
GND
RL-
RL+
RR-
RR+
BATT
VCC12V
FL-
FL+
FR-
FR+
AUX SENSOR

■Numbers in ○ are indicated REF. No. in the REPLACEMENT PARTS LIST

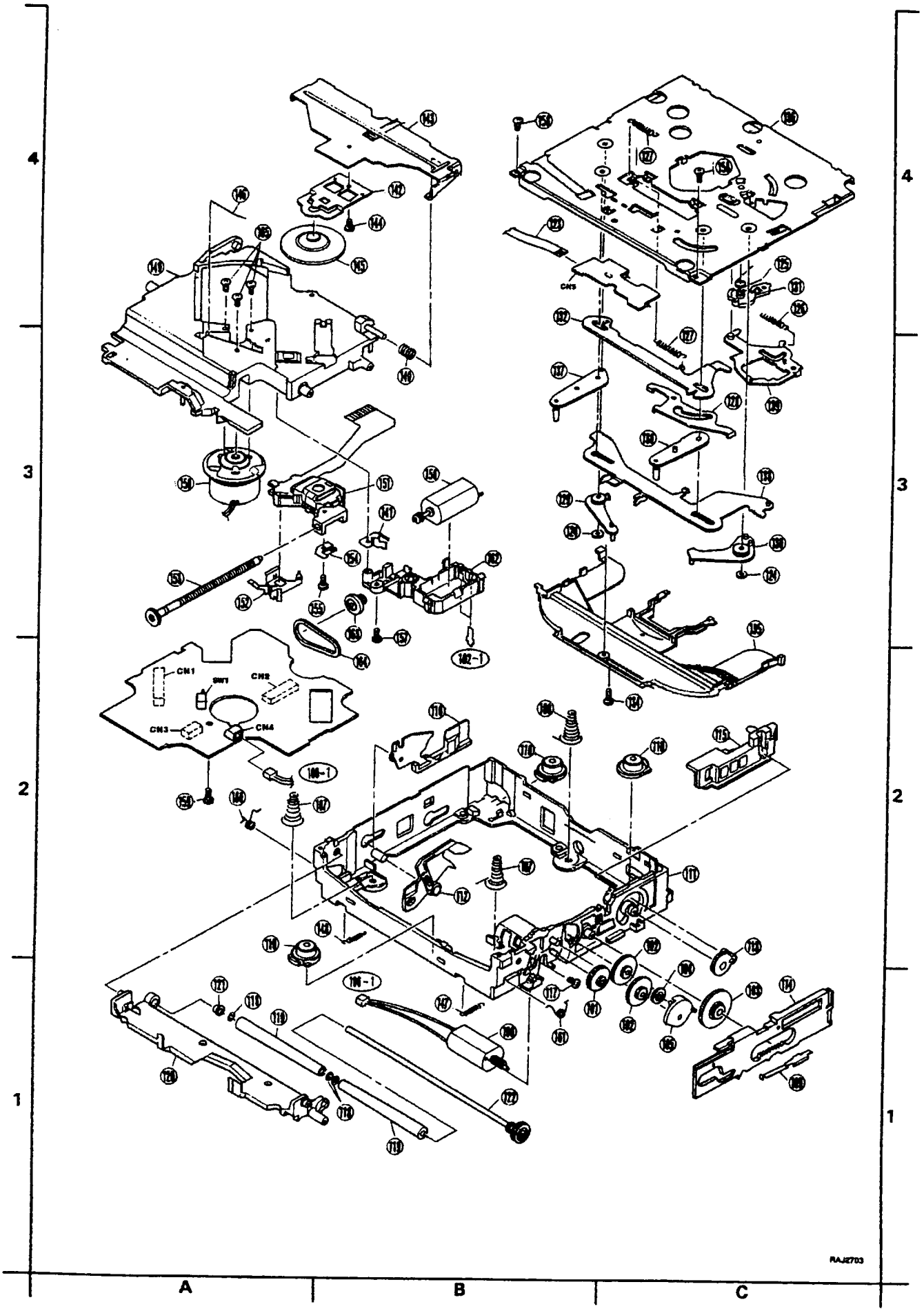

■ Numbers in ○ are indicated REF.No.in the REPLACEMENT PARTS LIST

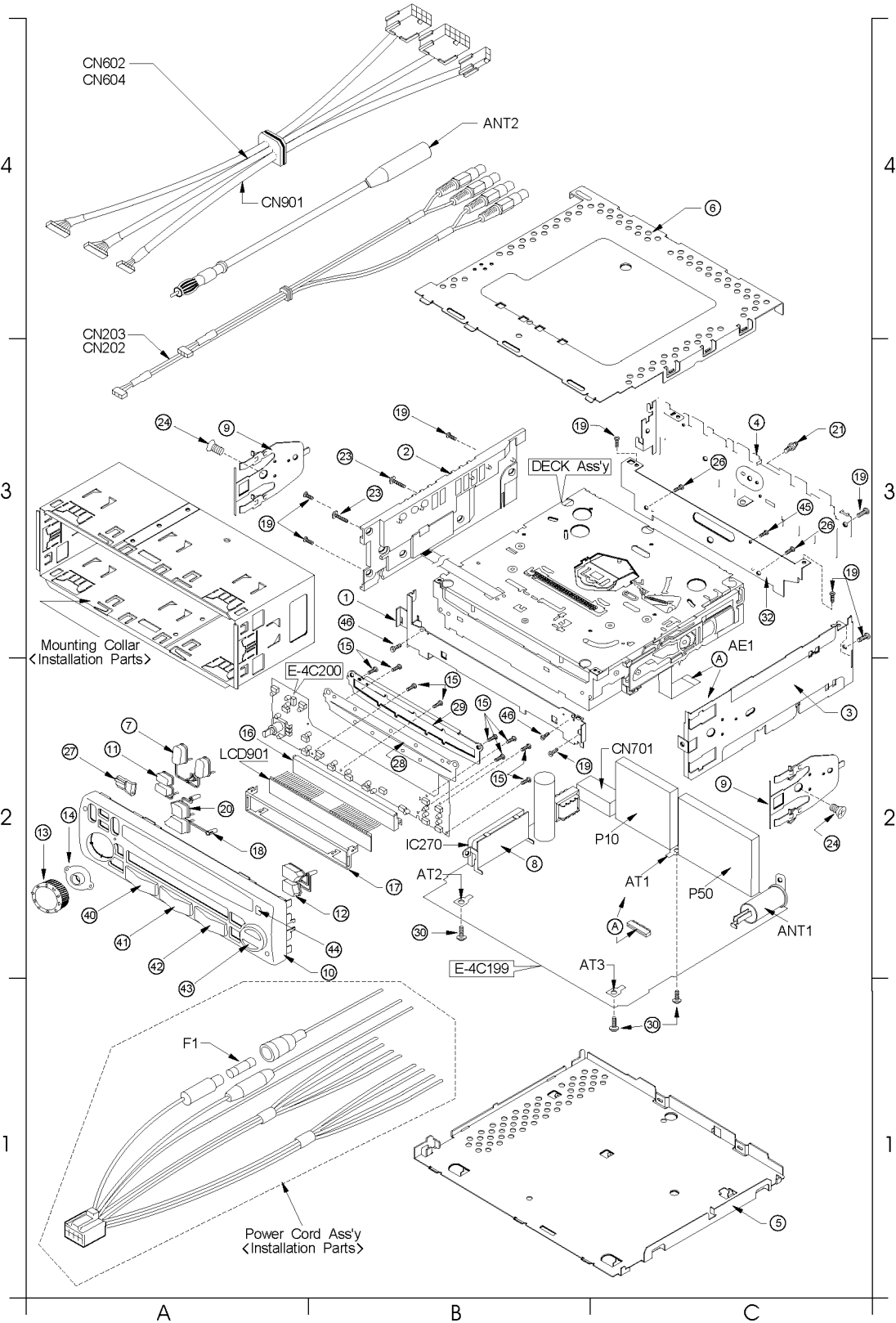

IC701 AN78N05

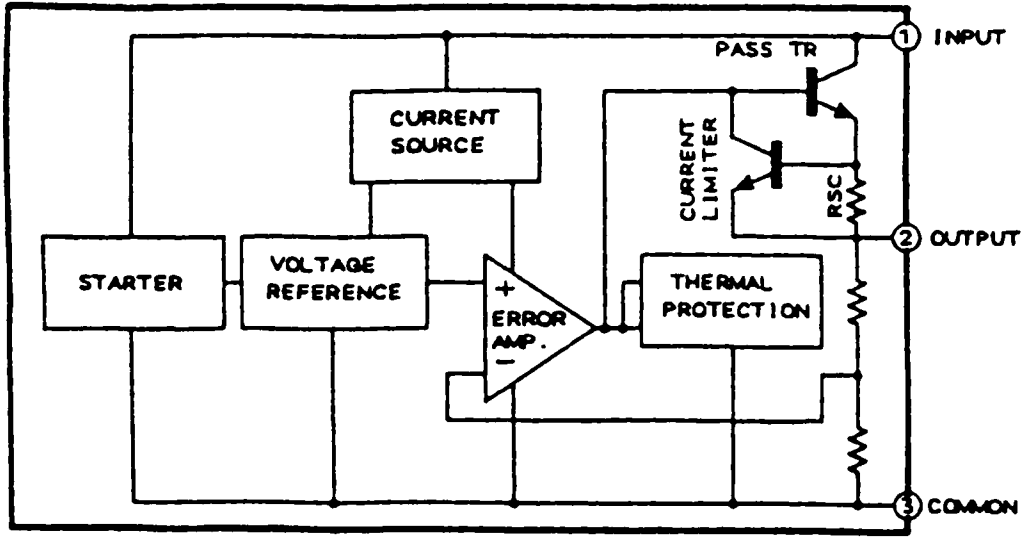

IC204 YEAMBU4066F2

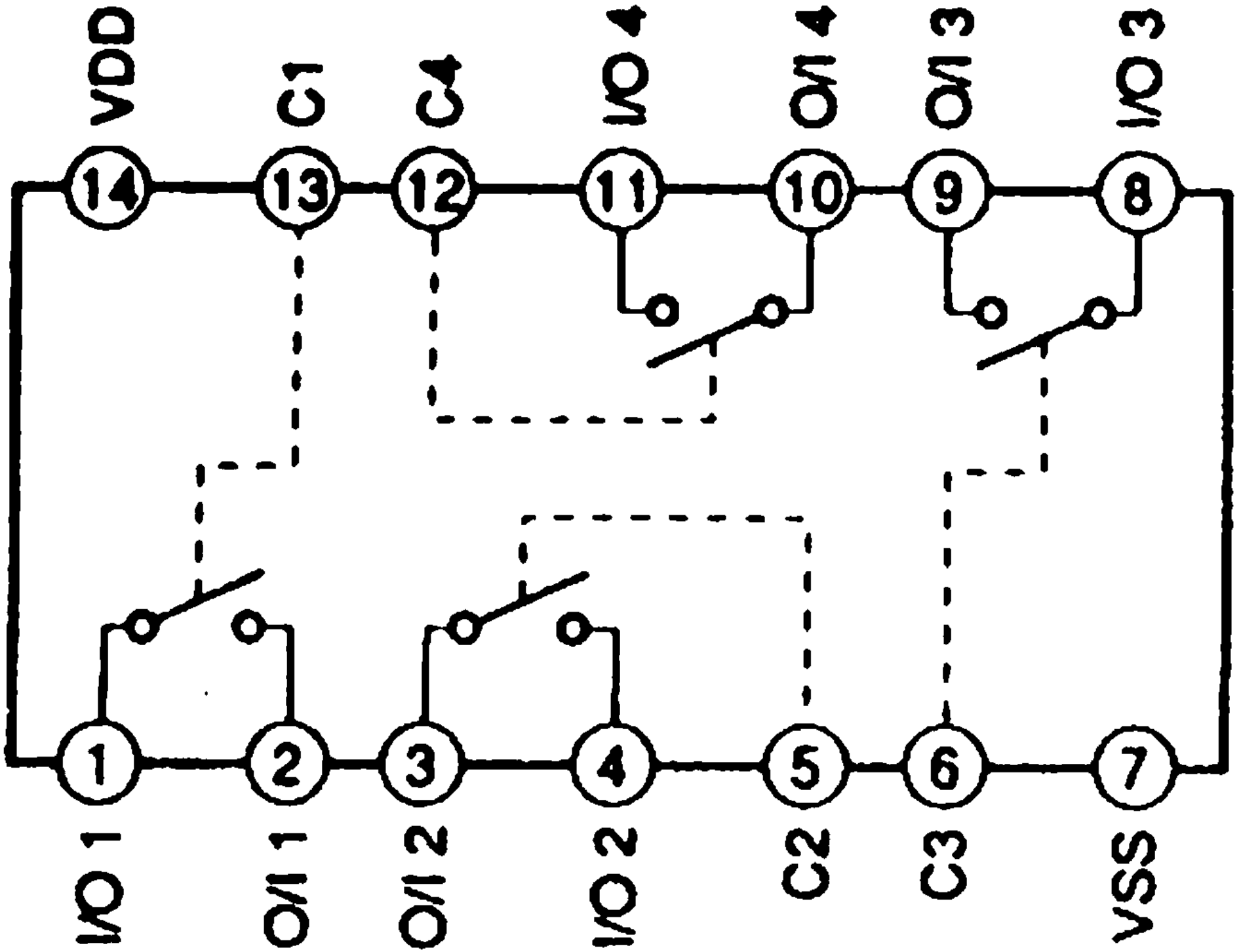

IC602 YEAMTC4584FN

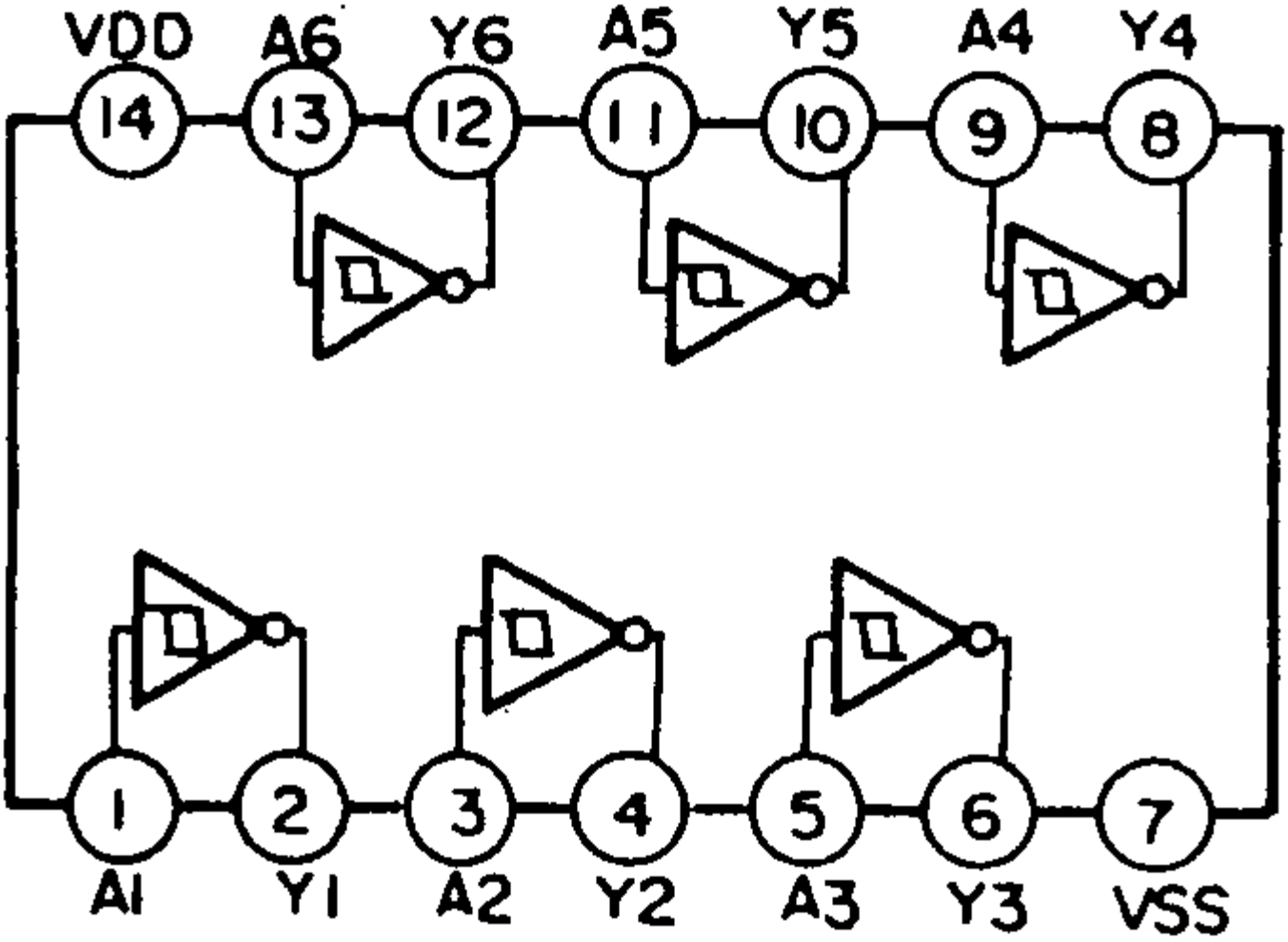

IC205 YEAMEA6320TT

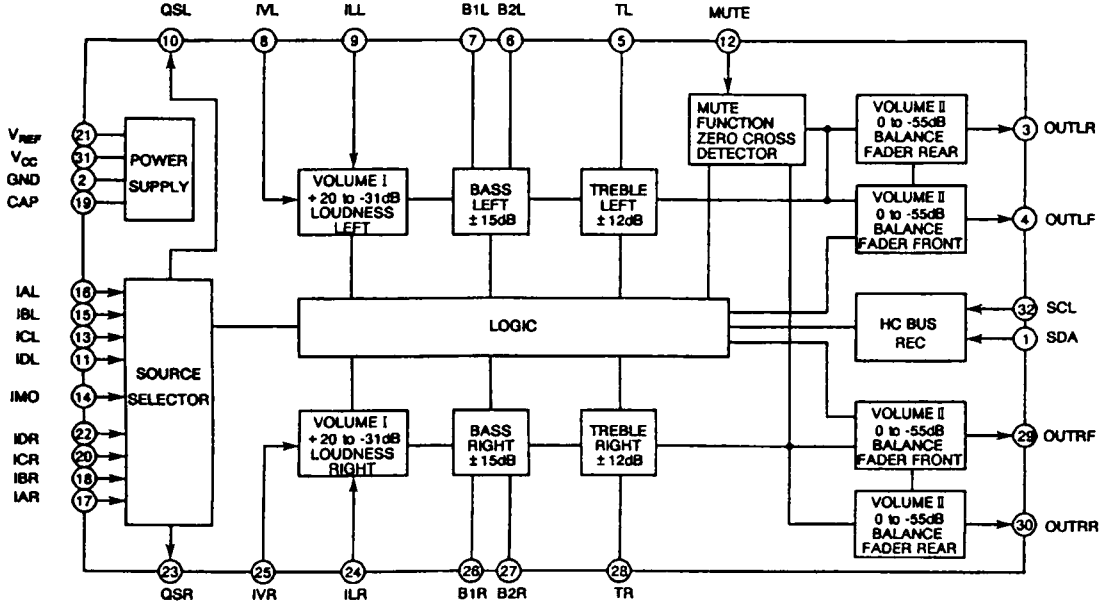

IC203 AN6552S-E1

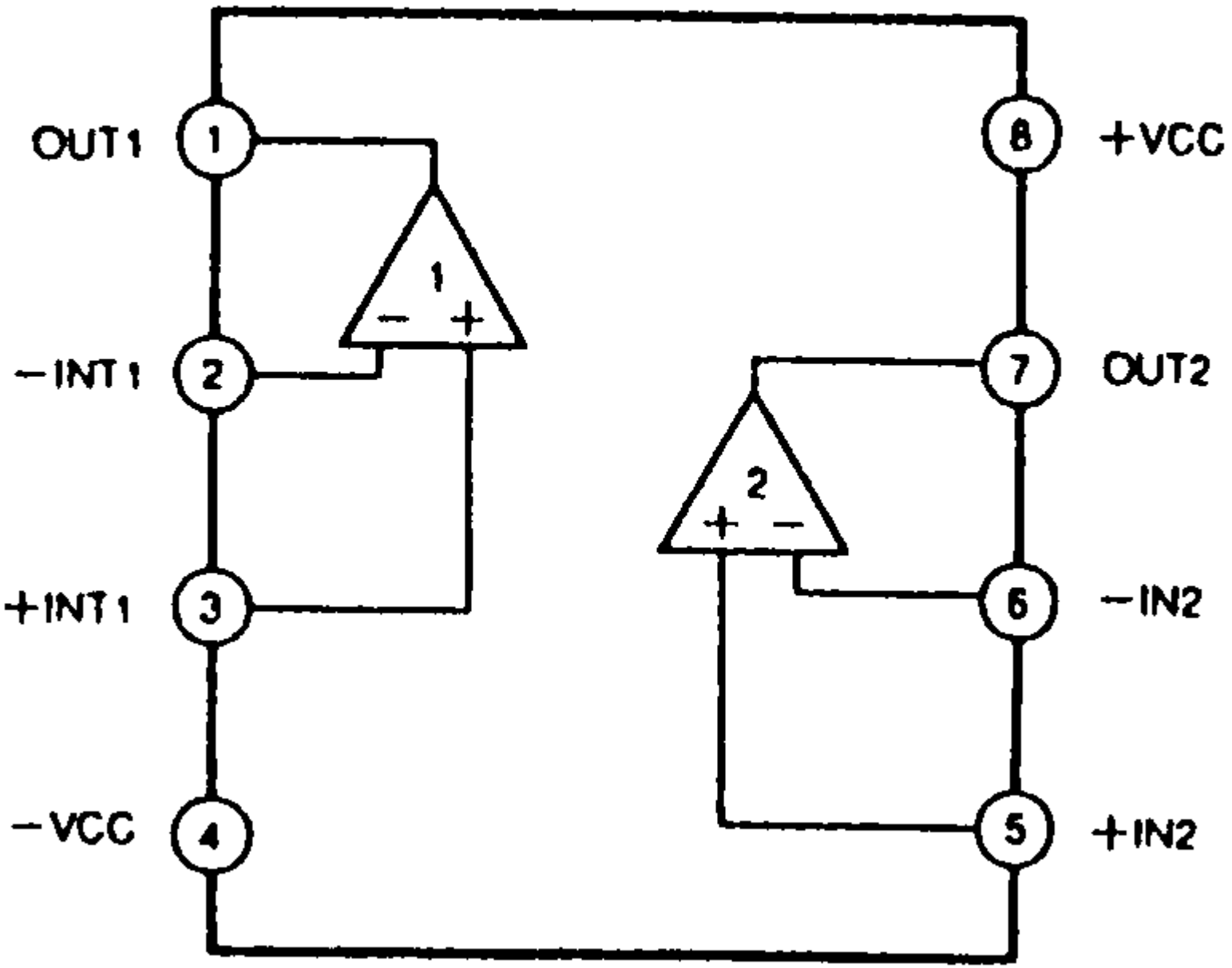

IC902 YEAMSBX8035F

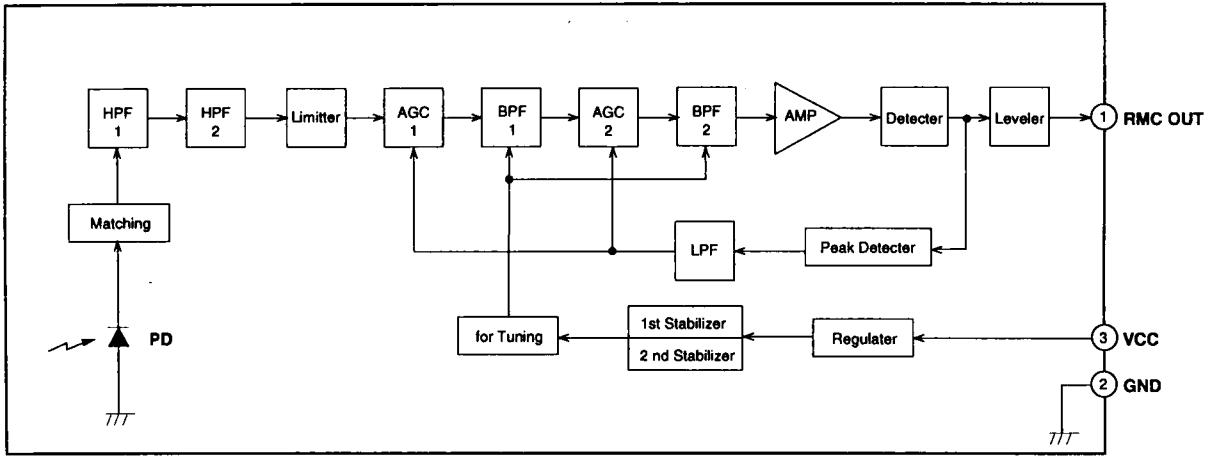

IC270 YEAMTDA8571J

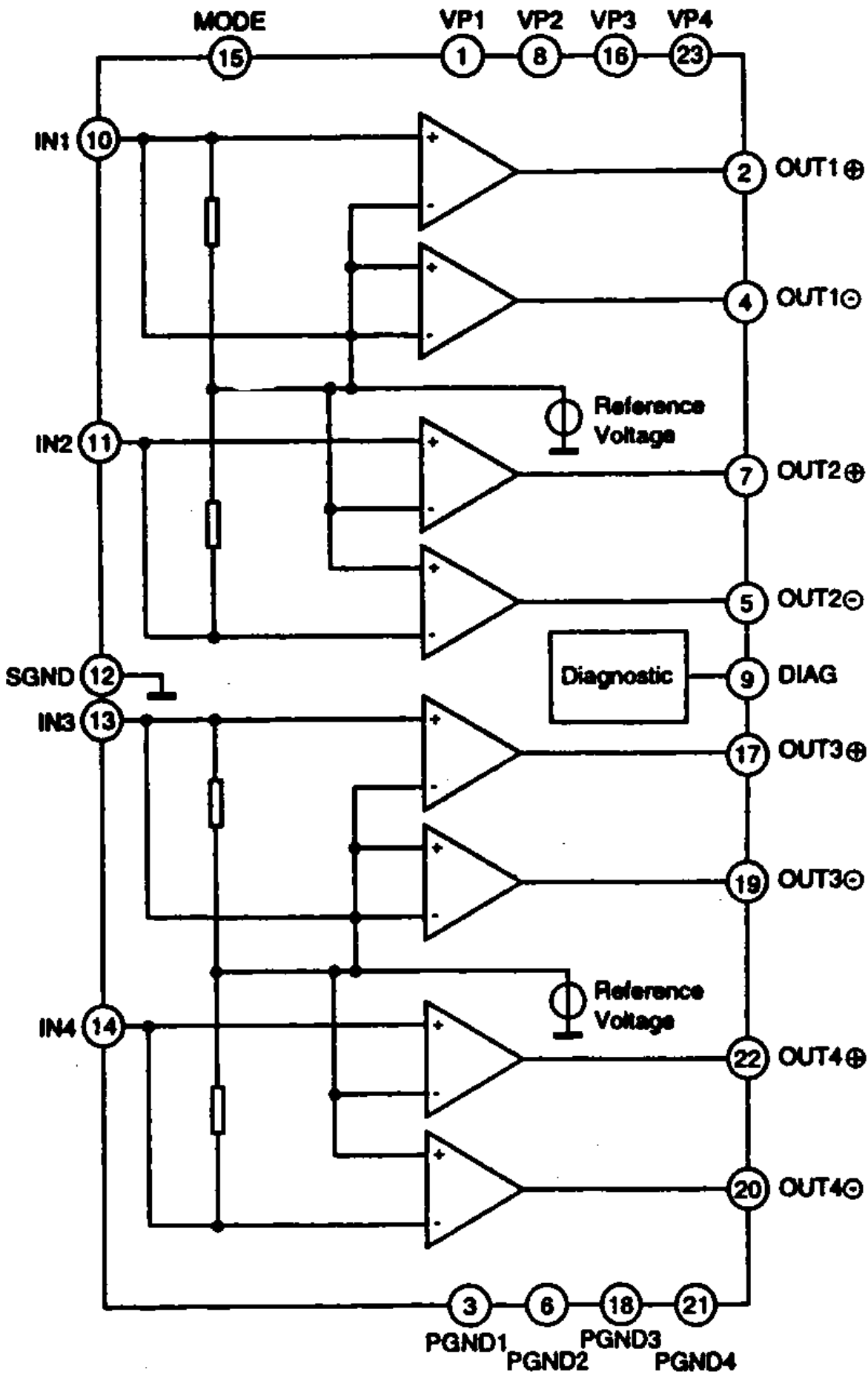

IC800 YEAMM51957AL

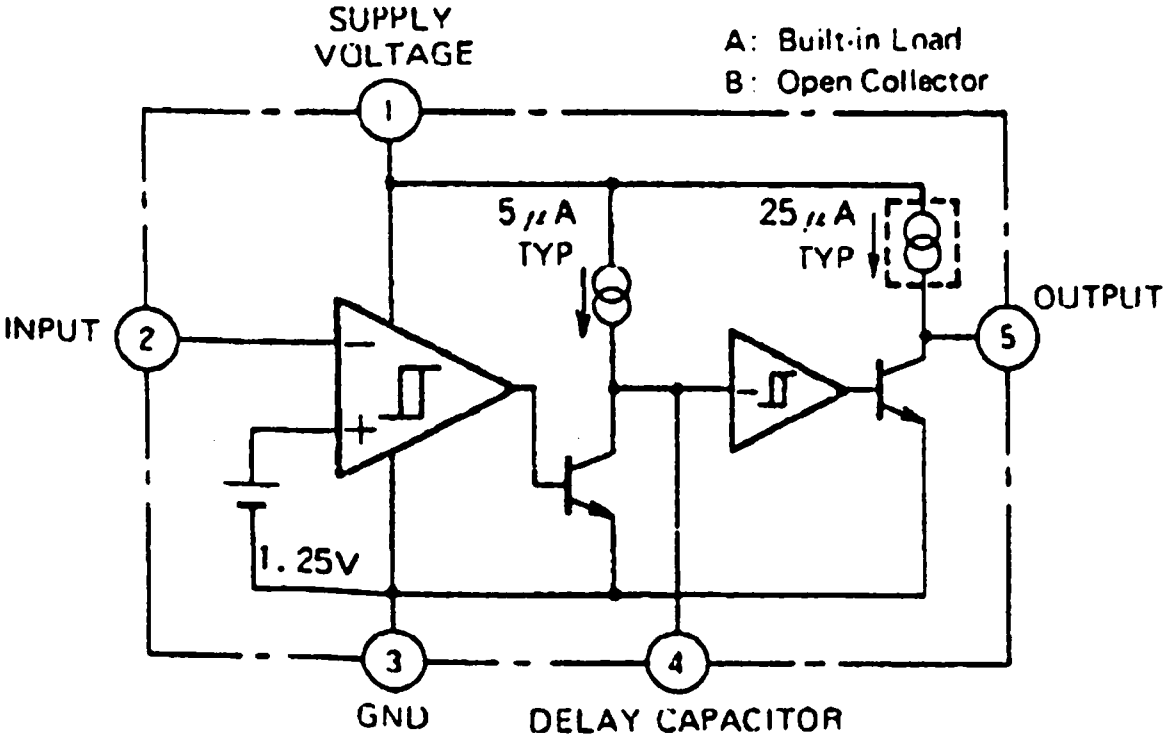

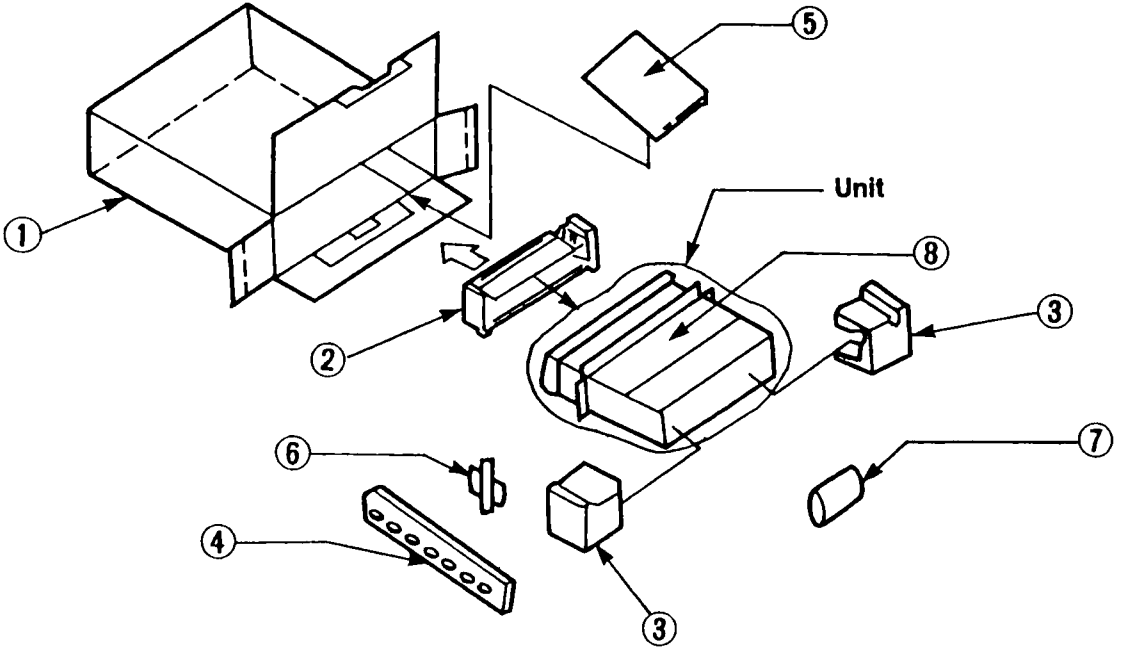
5
Unit
1
8
3
2
6
7
4
3

Note:

1. Be sure to make your orders of replacement parts according to this list.
2. Important safty notice: Component , indentified by ⚠ mark have special characteristics important for safety. when replacing any of these components, use only manufacturer's specified parts.
3. Location keys in the remarks column indicates the general location of the parts shown in the exploded drawing. as in a load map.
4. The marking (RTL) indicates that Retention Time is linited for this item. After the discontinuation of assembly in production, the item will continue to be availability is dependent on the type of assembly, and in accordance with the laws governing part and product retention. Aft the end of this period, the assembly will no longer be available.
5. "A" marks in remarks colum are indicated supply parts of Audio Division(AD) in Matsushita Electric Industrial Co., Ltd.(MEI)
6. "V" marks in remarks colum are indicated supply parts of Vidio System Division(VSD) in Matsushita Electric industrial Co., Ltd. (MEI)

Note:

1. Be sure to make your orders of replacement parts according to this list.
2. Important safty notice: Component , indentified by ⚠ mark have special characteristics important for safety. when replacing any of these components, use only manufacturer's specified parts.
3. Location keys in the remarks column indicates the general location of the parts shown in the exploded drawing. as in a load map.
4. The marking (RTL) indicates that Retention Time is linited for this item. After the discontinuation of assembly in production, the item will continue to be availability is dependent on the type of assembly, and in accordance with the laws governing part and product retention. Aft the end of this period, the assembly will no longer be available.
5. "T" marks in remarks colum are indicated supply parts of TAMACO.

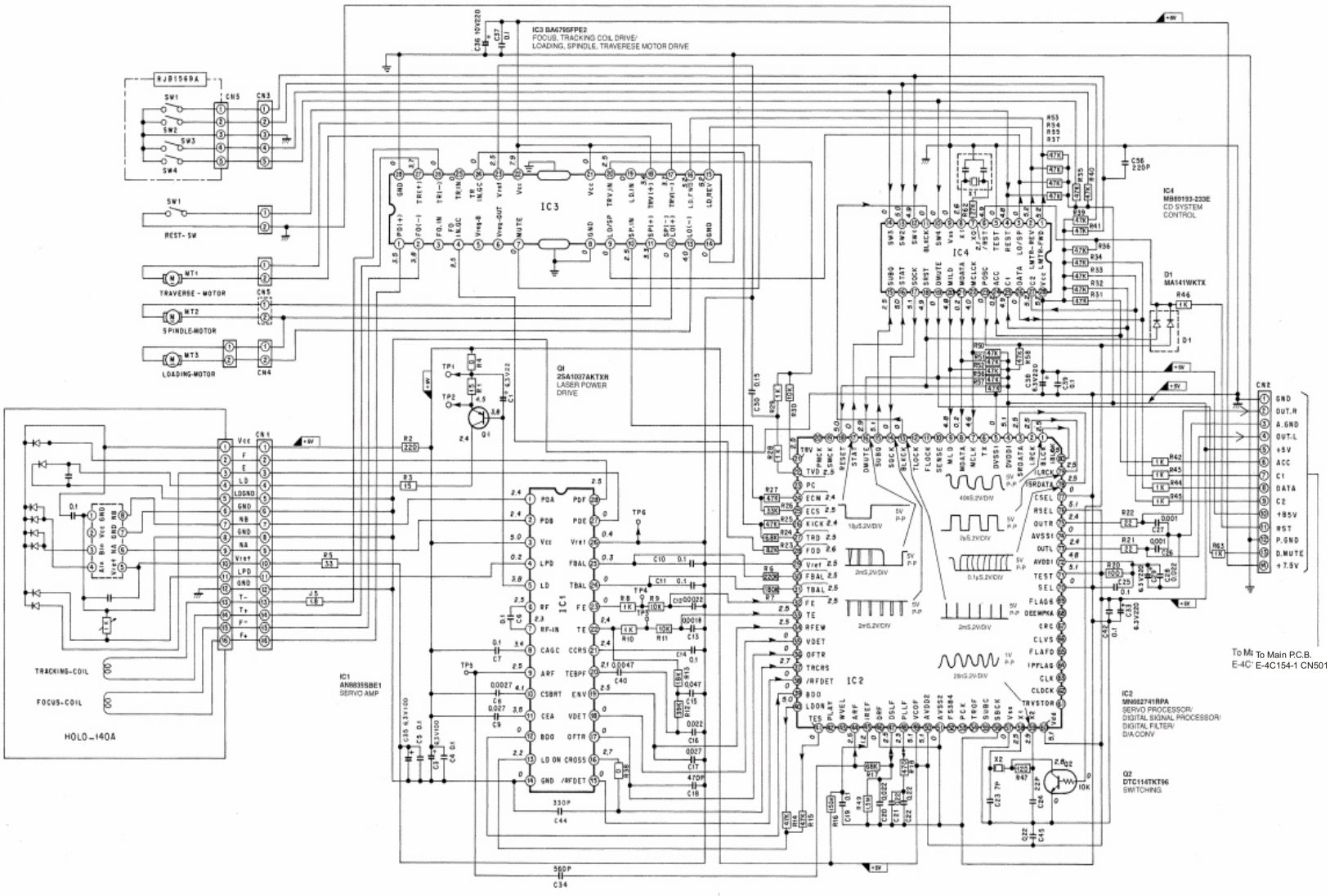
IC3 BA6795FPE2
FOCUS, TRACKING COIL DRIVE/
LOADING, SPINDLE, TRAVERESE MOTOR DRIVE
IC3
IC4
M66193-233E
CD SYSTEM
CONTROL
REST-SW
TRAVERSE-MOTOR
SPINDLE-MOTOR
LOADING-MOTOR
Q1
2SA1037AKTXR
LASER POWER
DRIVE
IC1
AN8835SBE1
SERVO AMP
IC2
M66274IRPA
SERVO PROCESSOR/
DIGITAL SIGNAL PROCESSOR/
DIGITAL FILTER/
D/A CONV
Q2
DTC114TKT96
SWITCHING
D1
MA141WKTX
TRACKING-COIL
FOCUS-COIL
HOLO-140A
To Main P.C.B.
E-4C154-1 CN501

E-4C200

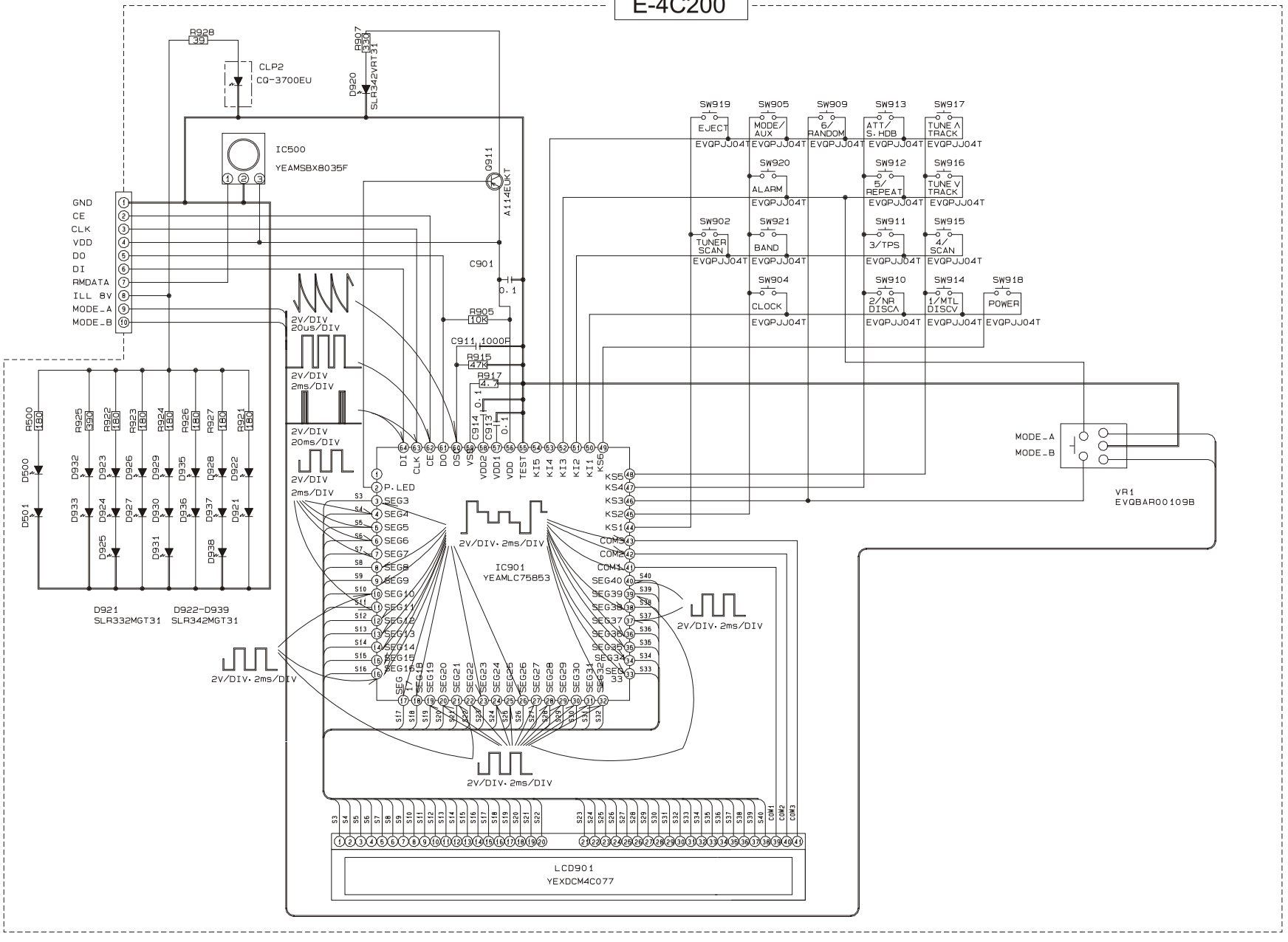
R928
39
CLP2
CQ-3700EU
R907
330
D920
SLR342VRT31
IC500
YEAMSBX8035F
Q911
A114EUKT
GND
CE
CLK
VDD
DO
DI
RMDATA
ILL 8V
MODE_A
MODE_B
C901
0.1
R905
10K
C911 1000P
R915
47K
R917
4.7
C914
0.1
C913
0.1
2V/DIV
20us/DIV
2V/DIV
2ms/DIV
2V/DIV
20ms/DIV
2V/DIV
2ms/DIV
R500 180
R925 330
R922 180
R923 180
R924 180
R926 180
R927 150
R921 180
D500
D501
D932
D933
D923
D924
D926
D927
D929
D930
D935
D936
D928
D937
D922
D921
D925
D931
D938
D921
SLR332MGT31
D922-D939
SLR342MGT31
P.LED
SEG3
SEG4
SEG5
SEG6
SEG7
SEG8
SEG9
SEG10
SEG11
SEG12
SEG13
SEG14
SEG15
SEG16
SEG17
SEG18
SEG19
SEG20
SEG21
SEG22
SEG23
SEG24
SEG25
SEG26
SEG27
SEG28
SEG29
SEG30
SEG31
SEG32
SEG33
SEG34
SEG35
SEG36
SEG37
SEG38
SEG39
SEG40
COM1
COM2
COM3
KS1
KS2
KS3
KS4
KS5
KS6
DI
CLK
CE
DO
OSC
VSS
VDD2
VDD1
VDD
TEST
KI5
KI4
KI3
KI2
KI1
2V/DIV· 2ms/DIV
IC901
YEAMLC75853
LCD901
YEXDCM4C077
SW919
EJECT
EVQPJJ04T
SW905
MODE/
AUX
SW909
6/
RANDOM
SW913
ATT/
S.HDB
SW917
TUNE∧
TRACK
SW920
ALARM
SW912
5/
REPEAT
SW916
TUNE∨
TRACK
SW902
TUNER
SCAN
SW921
BAND
SW911
3/TPS
SW915
4/
SCAN
SW904
CLOCK
SW910
2/NR
DISC∧
SW914
1/MTL
DISC∨
SW918
POWER
MODE_A
MODE_B
VR1
EVQBAR00109B

E-4C199

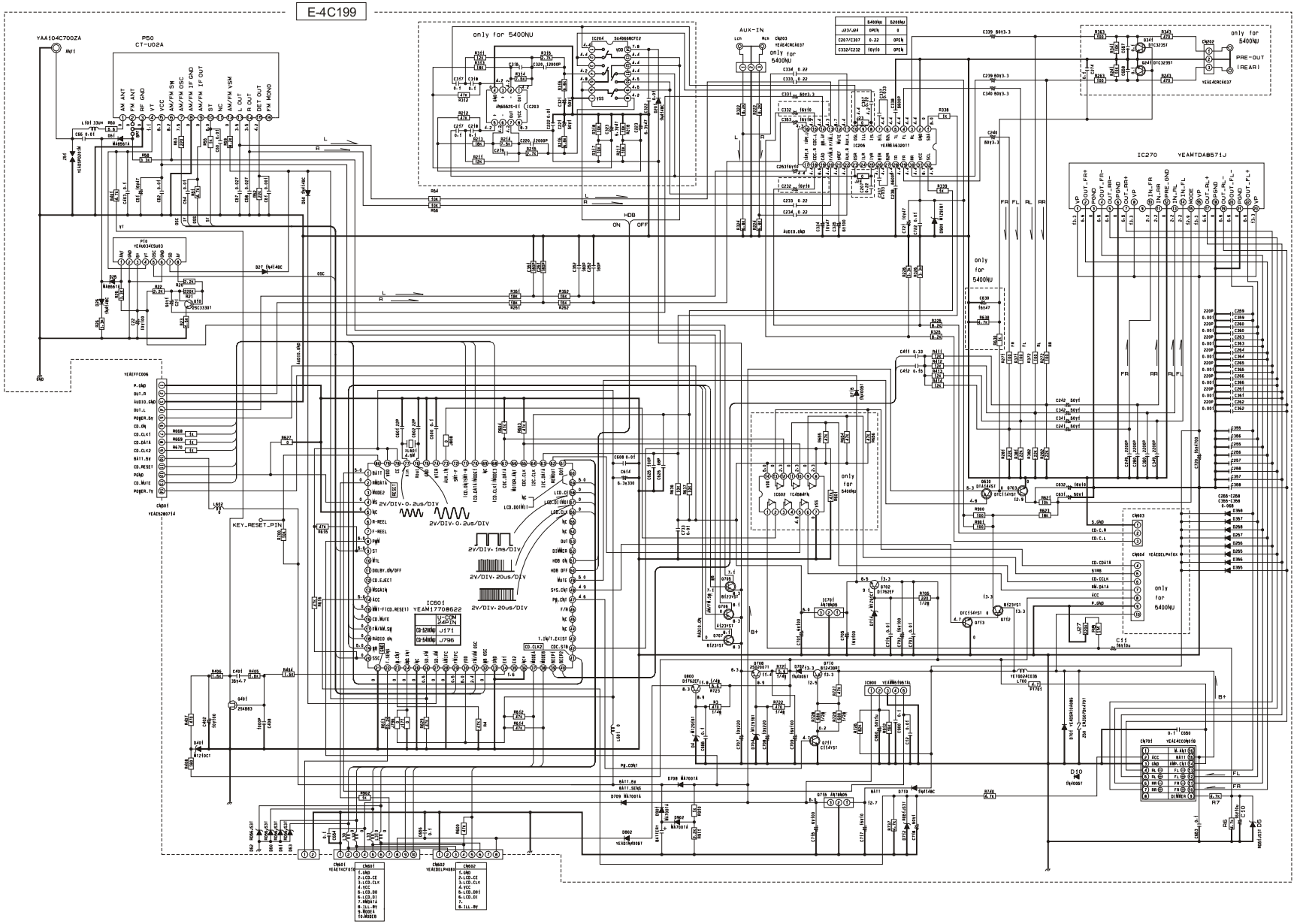
YAA104C700ZA
P50
CT-U02A
only for 5400NU
IC204
SU4066CF12
IC203
JN6525-E1
AUX-IN
Lch
Rch
CN203
YEAE4CRC4037
only for 5400NU
HDB
ON
OFF
only for 5400NU
PRE-OUT (REAR)
YEAE4CRC4037
IC270
YEAMTDA8571J
only for 5400NU
YEAEFFC006
CN601
YEAE5200714
KEY_RESET_PIN
IC601
YEAM17708622
U-COM
EARTH
CN-5200NU
CN-5400NU
J171
J796
2V/DIV·0.2us/DIV
2V/DIV·1ms/DIV
2V/DIV·20us/DIV
2V/DIV·20us/DIV
CN601
YEAE7ECF016
CN602
YEAEDELPH084
CN603
CN604
YEAEDELPH104
only for 5400NU
CN701
YEAE4CCON016
IC800
YEAM61907AL
D10
R7
C10
D5
B+
PG_CONT
BATT_SENS
BATT_Sy
AUDIO_GND
OSC

Specifications *

General

Power Supply	: 12V DC (11V-16V) Test Voltage 14.4V, Negative ground
Maximum Power Output	: 37 Wx4 channel at 400Hz, Volume Control maximum
Power Output	: 18 W per channel into 4 ohms, 40 to 30,000Hz, at 3% THD
Tone Action	: Bass; ± 10 dB at 100Hz Treble; ± 10 dB at 10kHz
Current Consumption	: Less than 2.5 A (0.5W 4-Speaker)
Speaker Impedance	: 4 Ω (4-8Ω acceptable)

AM Radio

Frequence Range	: 530 - 1,710kz
Useable Sensitivity	: 28 dB/μV (25 μV/ S/N 20dB)

FM Stereo Radio

Frequency Range	: 87.9 - 107.9MHz
Useable Sensitivity	: 12 dBf. (1.1μV/75 Ω, S/N 30 dB)
50 dB Quieting Sensitivity	: 17 dBf. (2.0 μV/75Ω)
Frequency Response	: 30 - 15,000Hz ± 3dB
Alternate Channel Sensitivity	: 75 dB
Stereo Separation	: 35 dB at 1,000Hz
Signal/Noise Ratio	: 70 dB (Mono)

WB Radio

Freuency Range	: 162.40 - 162.55MHz
Useable Sensitivity	: 3 dB (S/N 20dB)
Signal/Noise Ratio	: 50 dB (40 dB/μV)

CD Player

Sampling Frequence	: 32 times oversampling
DA Converter	: MASH.1 bit/4 DAC System
Error Correction System	: Panasonic Super Decording Algorithm
Pick-Up type	: 1-beam
Light Source	:Semiconductor laser
Wavelength	: 780nm
Frequency Response	: 20Hz-20,000Hz (±1 dB)
Signal to Noise Ratio	: 98 dB
Total Harmonic Distortion	:0.01% (1 kHz)
Wow and Flutter	: Below measurable limits
Channel Separation	: 75 dB

Dimentions **	: 7" x 1-15/16" x 5-7/8" (178 x 50 X 150mm)
Weight **	: 3 lbs. 8 oz (1.6kg)

* Specifications and the design are subject to possible modification without notice due to improvements.

** Dimentions and weight shown are approximate.

*** Above specifications comply with EIA standards.

Supplement

P10 YEAU034CSU02

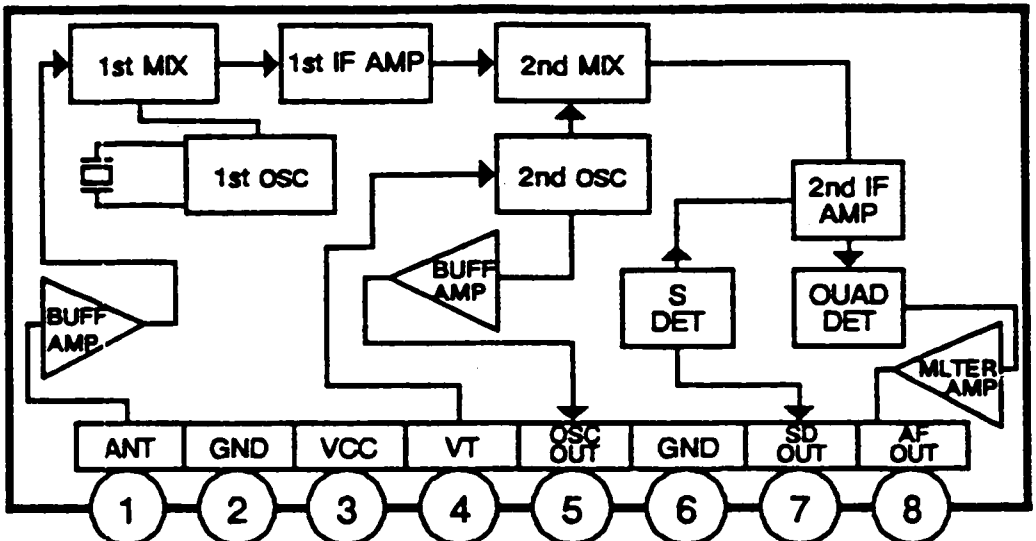

P50 YEAU4CMXU01

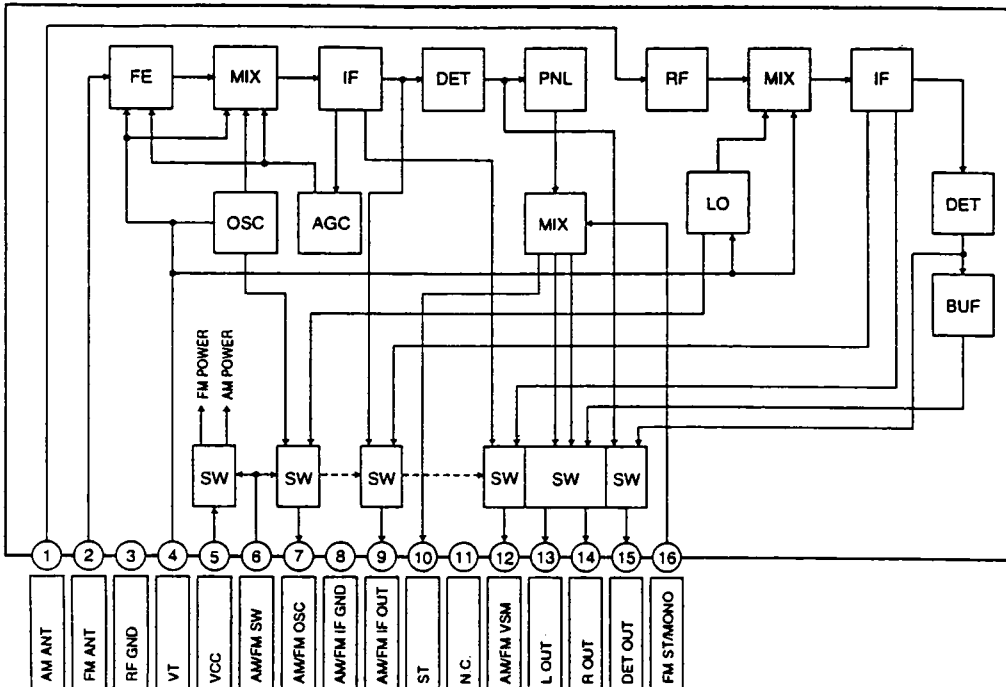

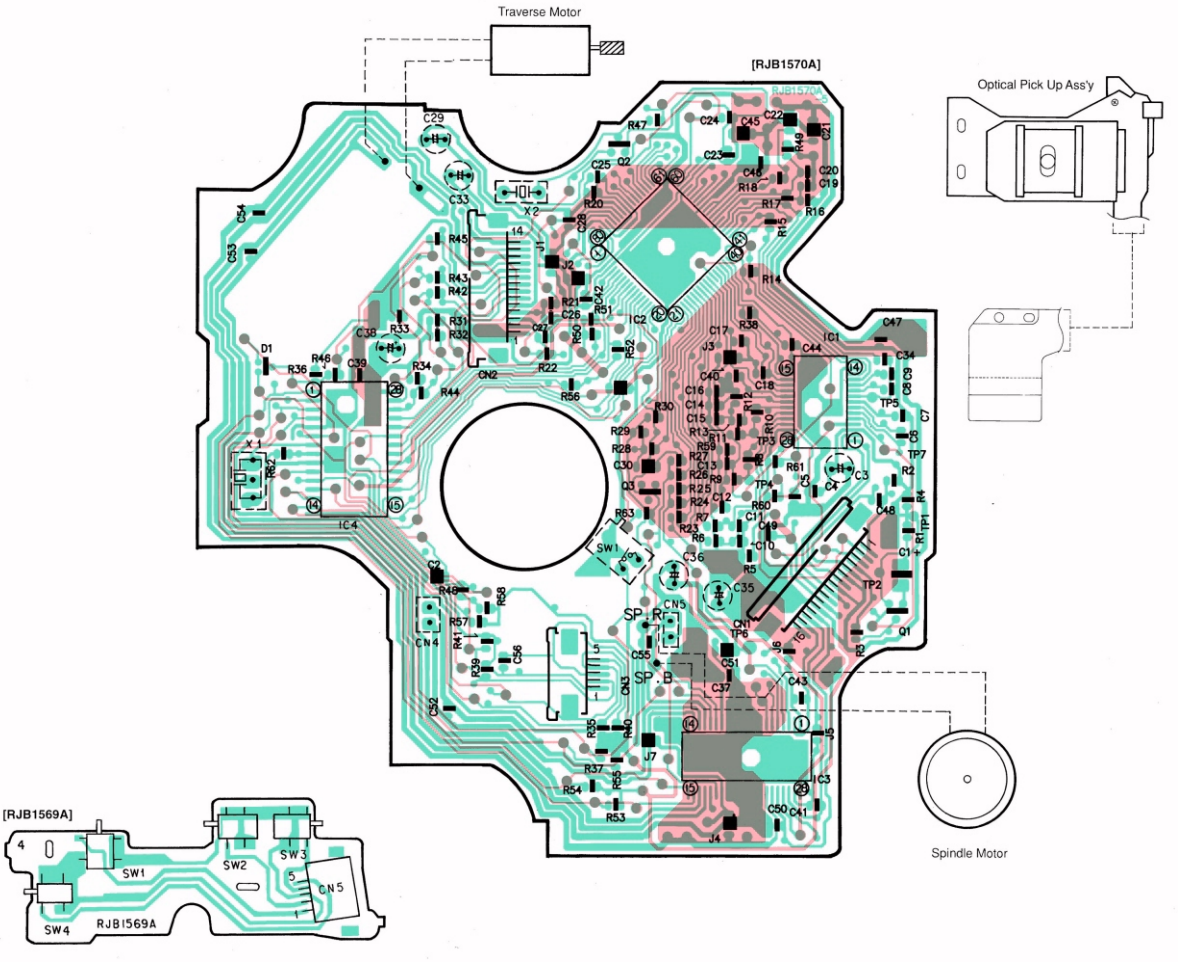
Traverse Motor
[RJB1570A]
Optical Pick Up Ass'y
Spindle Motor
[RJB1569A]
RJB1569A
SW1
SW2
SW3
SW4
CN5
SP. R
SP. B

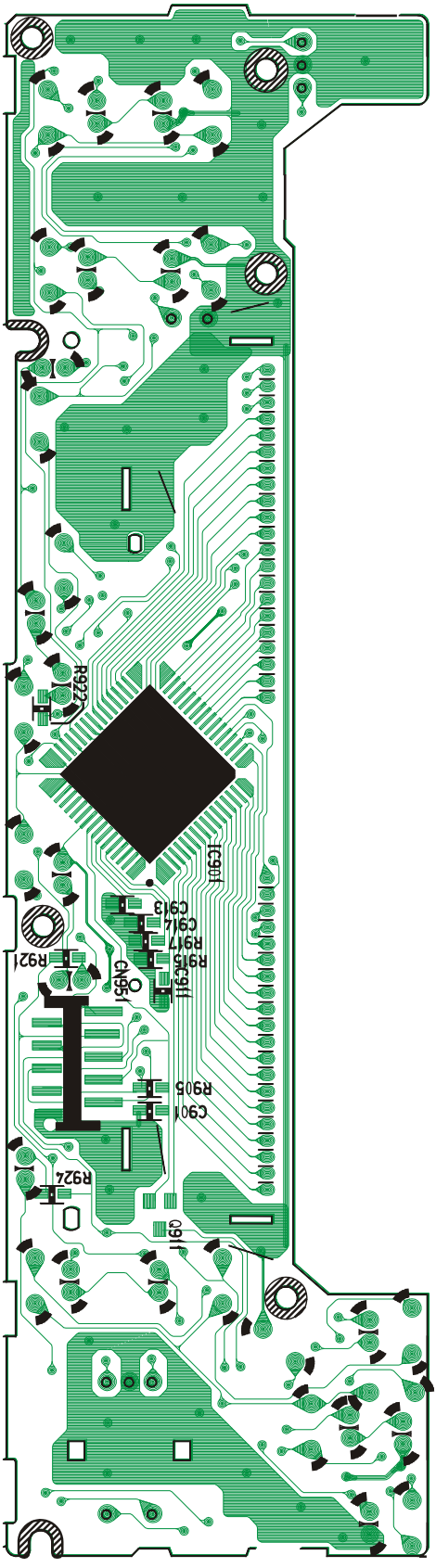

[E-4C200] [BOTTOM VIEW]

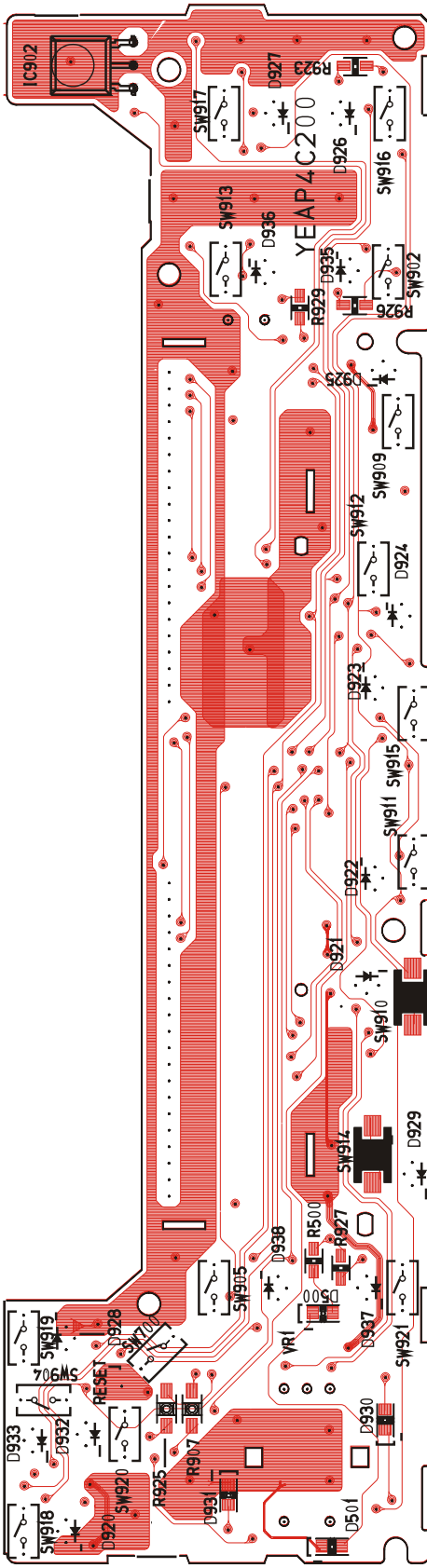

[E-4C200] [TOP VIEW]

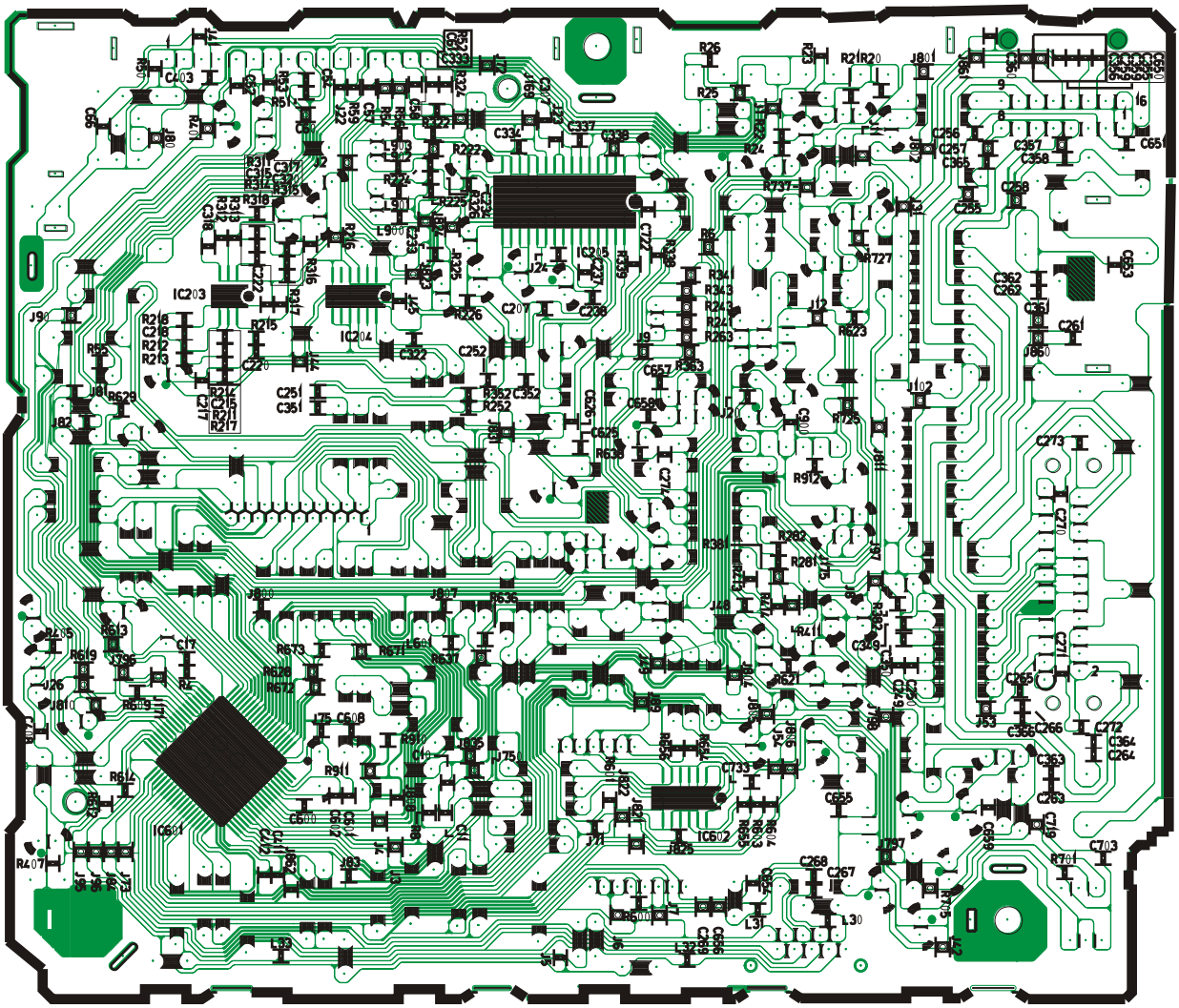

[E-4C199] [Bottom View]

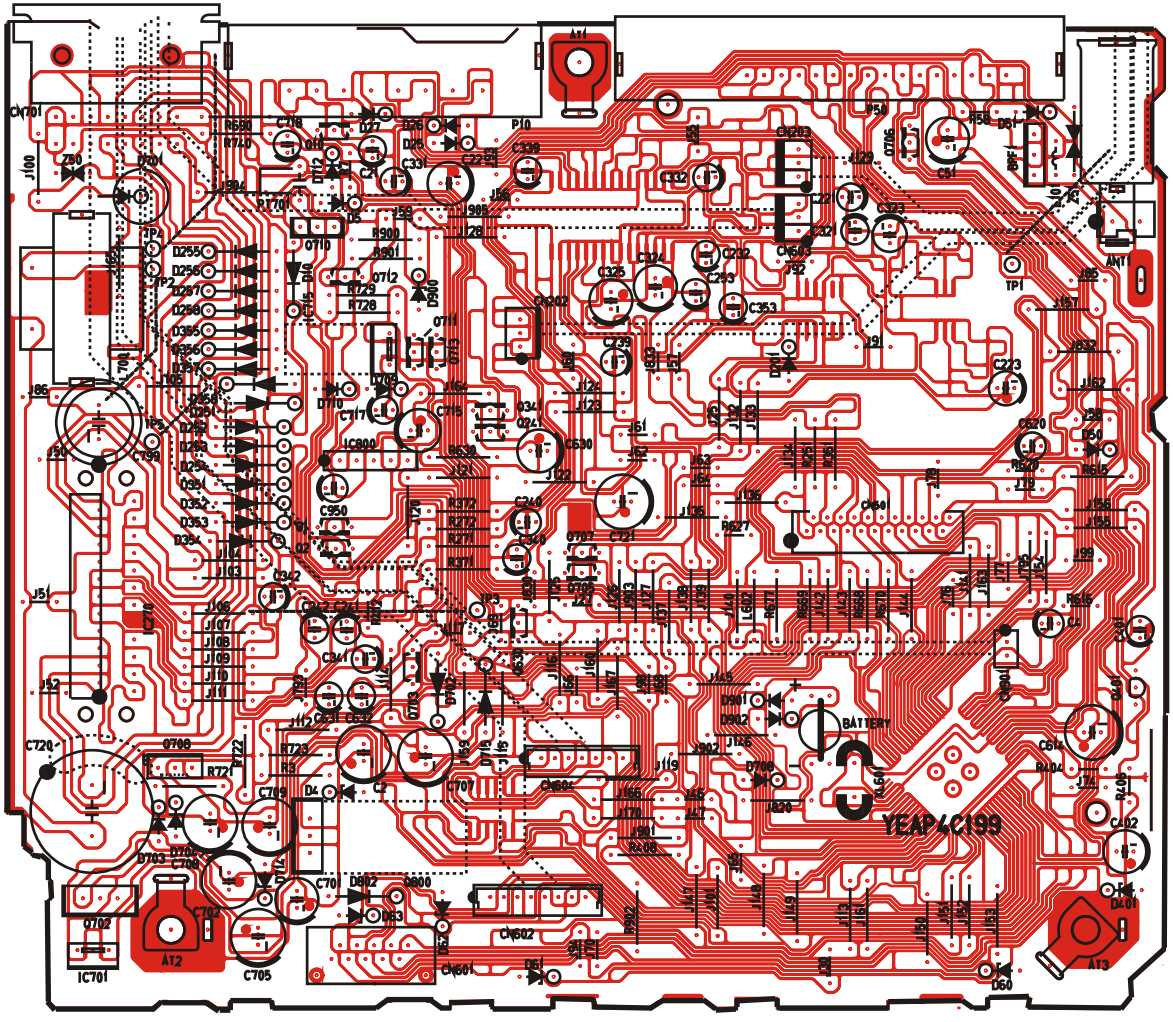

[E-4C199] [Top View]