HD SERIES
Panasonic
VOL
MUTE
TUNE
SEEK

178mm
50mm
150mm
HQ SERIES
Panasonic

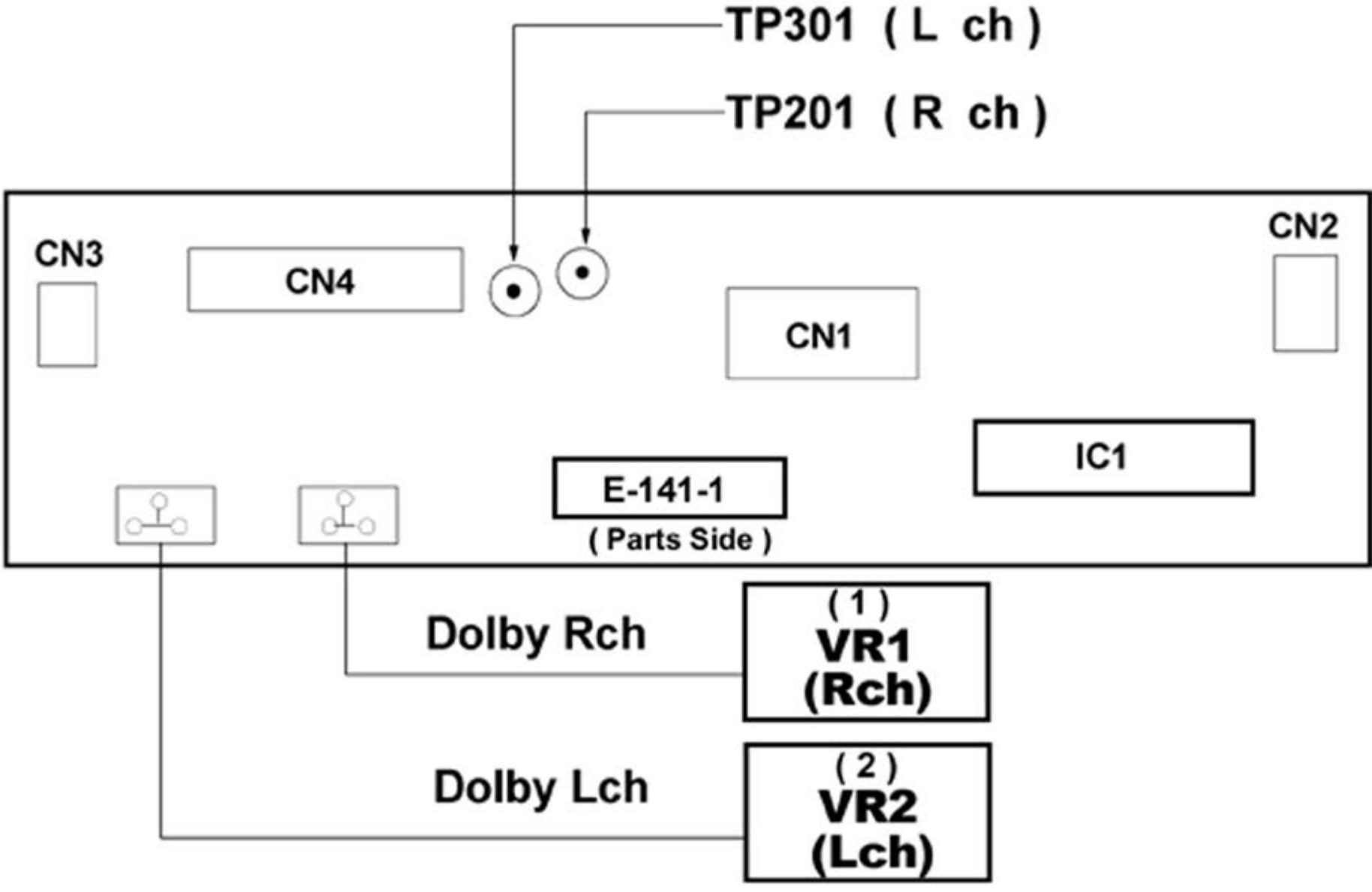
TP301 (L ch)
TP201 (R ch)
CN3
CN4
CN1
CN2
IC1
E-141-1
(Parts Side)
Dolby Rch
(1)
VR1
(Rch)
Dolby Lch
(2)
VR2
(Lch)

Step	Alignment Item	Test Tape	VTVM Connection	Adjust	Remarks
1	DOLBY NR Rch	RKFZ0038	TP201	VR1	Adjust for 388mV 20m
2	DOLBY NR Lch	RKFZ0038	TP301	VR2	Adjust for 388mV 20m

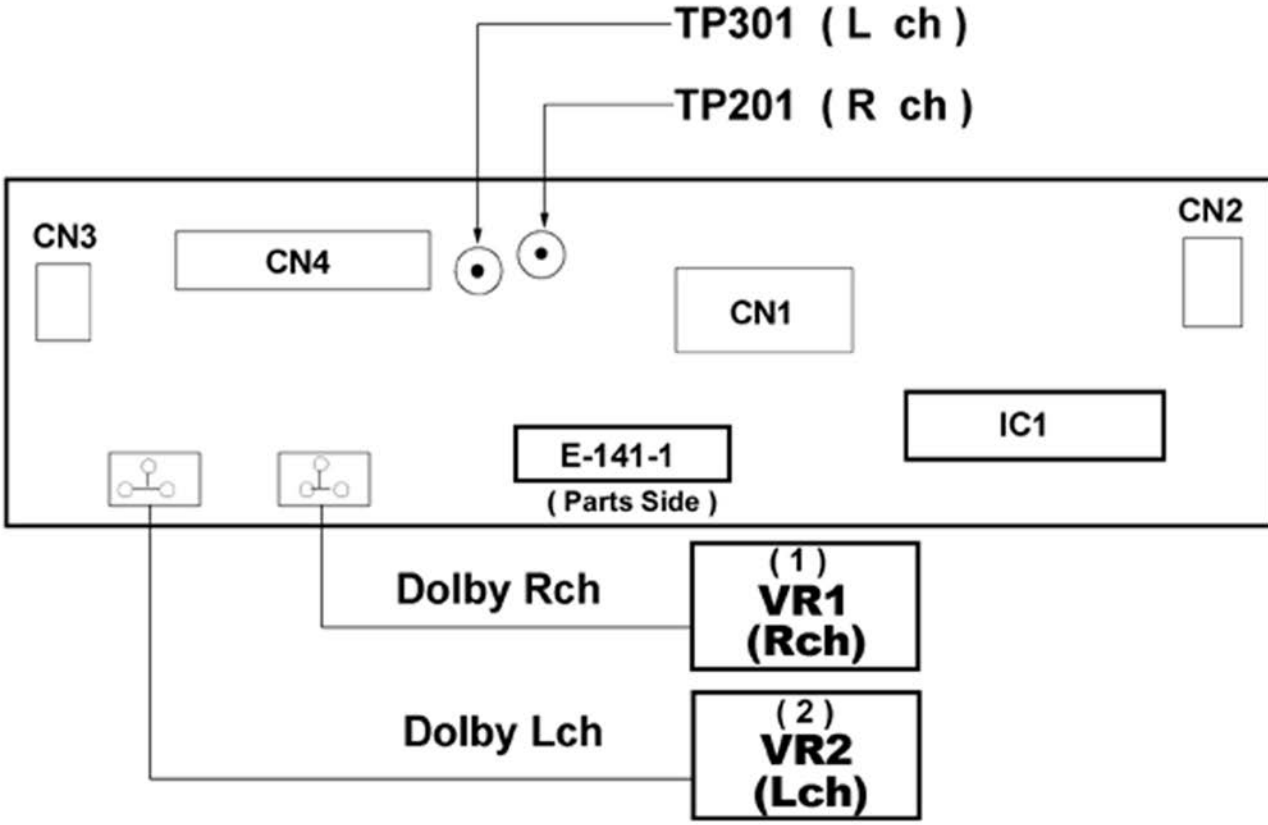
TP301 (L ch)
TP201 (R ch)
CN3
CN4
CN1
CN2
IC1
E-141-1
(Parts Side)
Dolby Rch
(1)
VR1
(Rch)
Dolby Lch
(2)
VR2
(Lch)

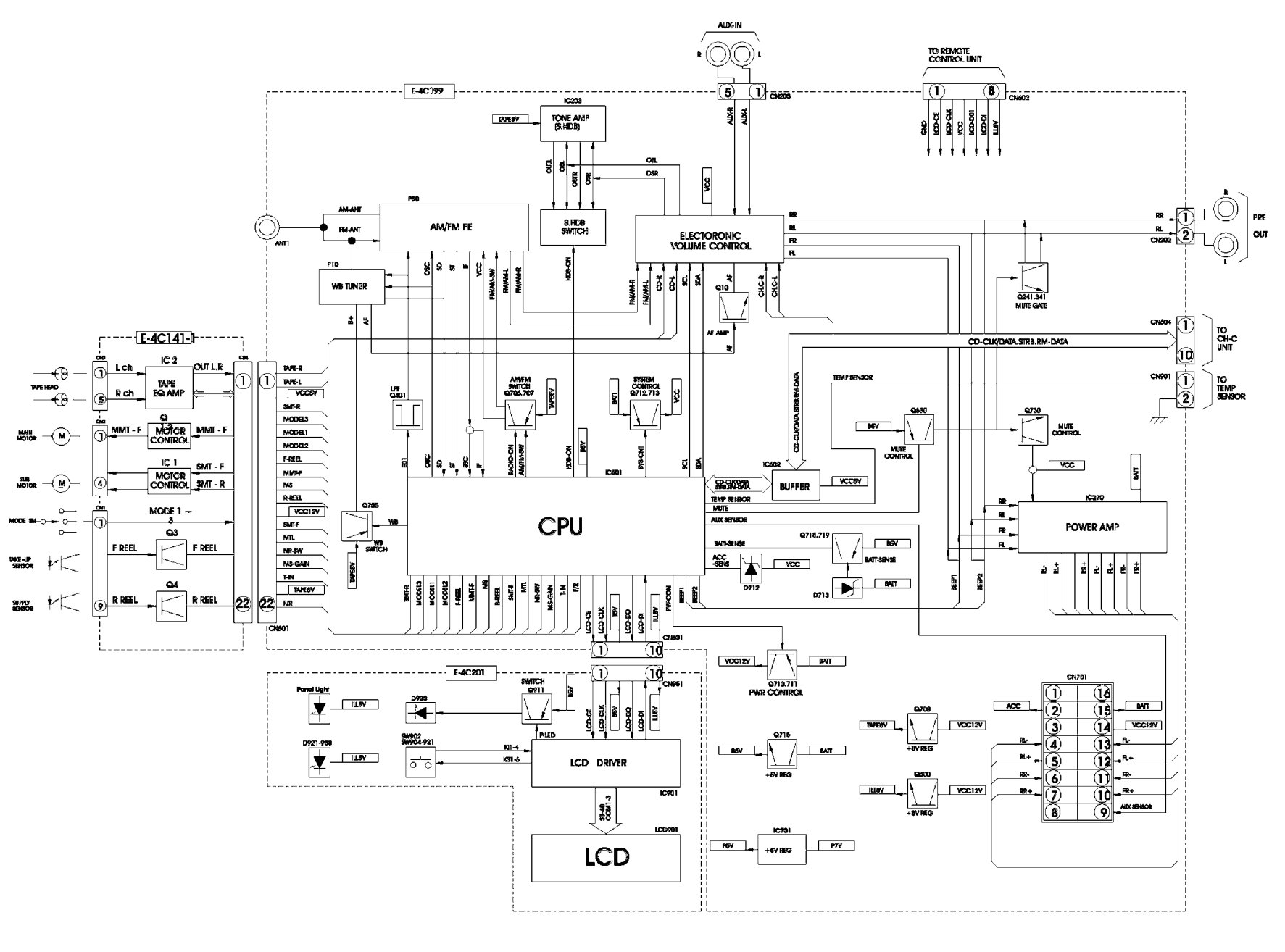
AUX-IN
R
L
CN203
TO REMOTE CONTROL UNIT
CN602
GND
LCD-CE
LCD-CLK
VCC
LCD-DO
LCD-DI
ILL8V
E-4C199
IC303
TONE AMP (S.HDB)
TAPE8V
OUTL
DSL
OUTR
DSR
DSL
DSR
AUX-R
AUX-L
VCC
AM-ANT
FM-ANT
ANT1
P60
AM/FM FE
S.HDB SWITCH
ELECTORONIC VOLUME CONTROL
RR
RL
FR
FL
CN202
PRE OUT
P10
WB TUNER
OSC
SD
ST
IF
VCC
FM/AM-SW
FM/AM-L
FM/AM-R
HDB-ON
CD-R
CD-L
SCL
SDA
AF
Q10
AF AMP
CH.C-R
CH.C-L
Q241.341
MUTE GATE
CN604
TO CH-C UNIT
CD-CLK/DATA.STRB.RM-DATA
CN901
TO TEMP SENSOR
TEMP SENSOR
E-4C141-1
TAPE HEAD
L ch
R ch
IC 2
TAPE EQ AMP
OUT L.R
MAIN MOTOR
MMT - F
IC 3
MOTOR CONTROL
SUB MOTOR
IC 1
SMT - F
SMT - R
MODE SW
MODE 1 ~ 3
F REEL
Q3
R REEL
Q4
TAKE-UP SENSOR
SUPPLY SENSOR
CN1
CN501
TAPE-R
TAPE-L
VCC5V
SMT-R
MODEL3
MODEL1
MODEL2
F-REEL
MMT-F
NS
R-REEL
VCC12V
SMT-F
MTL
NR-SW
NS-GAIN
T-IN
TAPE8V
F/R
LPF Q401
AM/FM SWITCH Q706.707
WF8V
SYSTEM CONTROL Q712.713
BATT
VCC
IC401
CPU
Q705
WB SWITCH
DAP8V
WB
BSV
BATT-SENSE
ACC -SENS
D712
Q718.719
D713
IC602
BUFFER
VCC8V
MUTE CONTROL
Q630
Q730
MUTE CONTROL
IC270
POWER AMP
BEEP1
BEEP2
CN601
E-4C201
Panel Light
ILL8V
D920
D921-938
SW902 SW904-921
SWITCH Q911
P-LED
K1-4
K31-6
LCD DRIVER
IC901
SS-40 COM1-3
LCD901
LCD
VCC12V
Q710.711
PWR CONTROL
Q709
+5V REG
Q716
Q800
IC701
P5V
P7V
CN701
ACC
BATT
VCC12V
FL-
FL+
FR-
FR+
AUX SENSOR

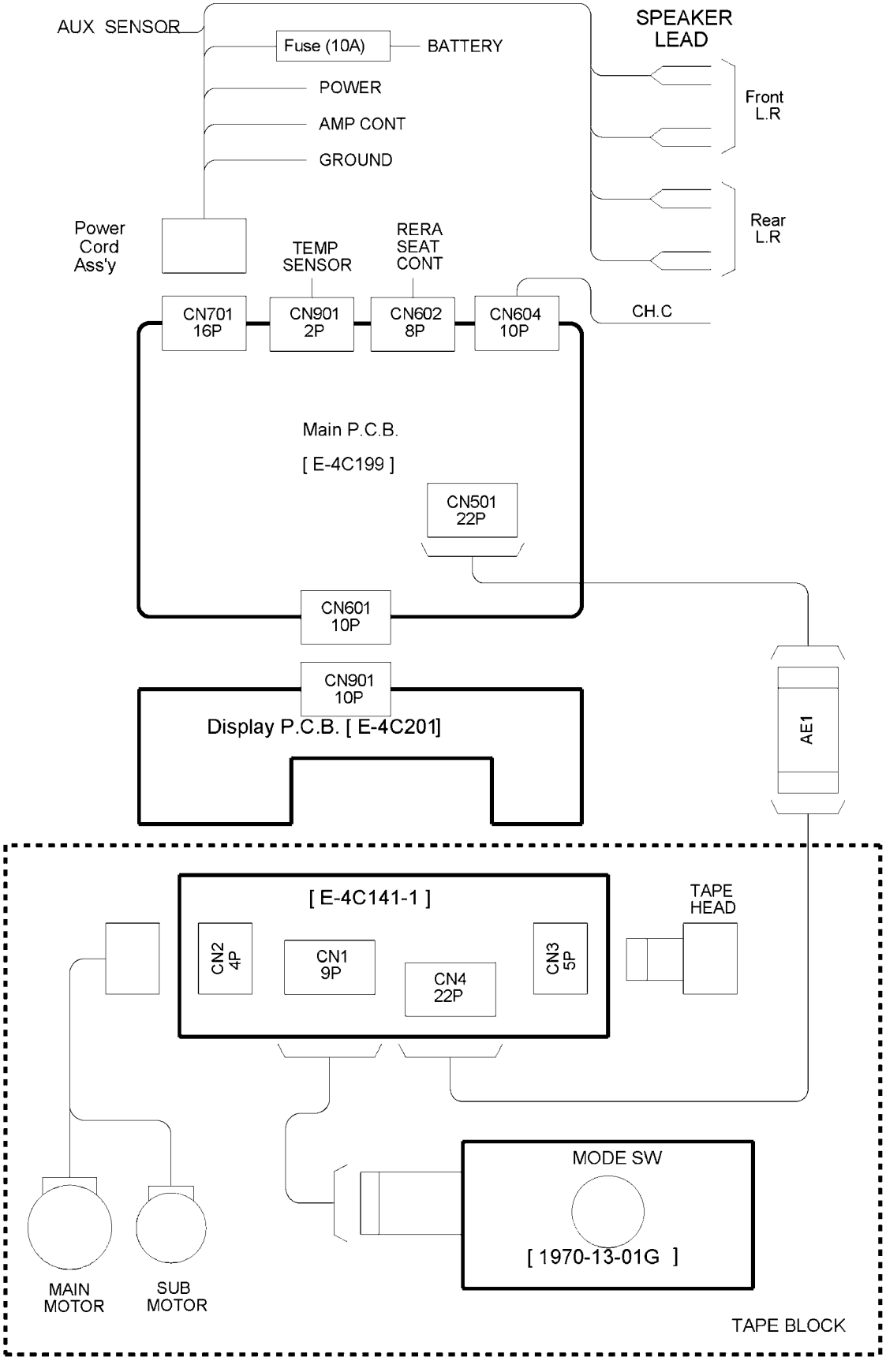
AUX SENSOR
Fuse (10A)
BATTERY
POWER
AMP CONT
GROUND
SPEAKER LEAD
Front L.R
Rear L.R
Power Cord Ass'y
TEMP SENSOR
RERA SEAT CONT
CN701 16P
CN901 2P
CN602 8P
CN604 10P
CH.C
Main P.C.B.
[E-4C199]
CN501 22P
CN601 10P
CN901 10P
Display P.C.B. [E-4C201]
AE1
[E-4C141-1]
CN2 4P
CN1 9P
CN4 22P
CN3 5P
TAPE HEAD
MODE SW
[1970-13-01G]
MAIN MOTOR
SUB MOTOR
TAPE BLOCK

■ Numbers in ○ are indicated REF.No. in the REPLACEMENT PARTS LIST

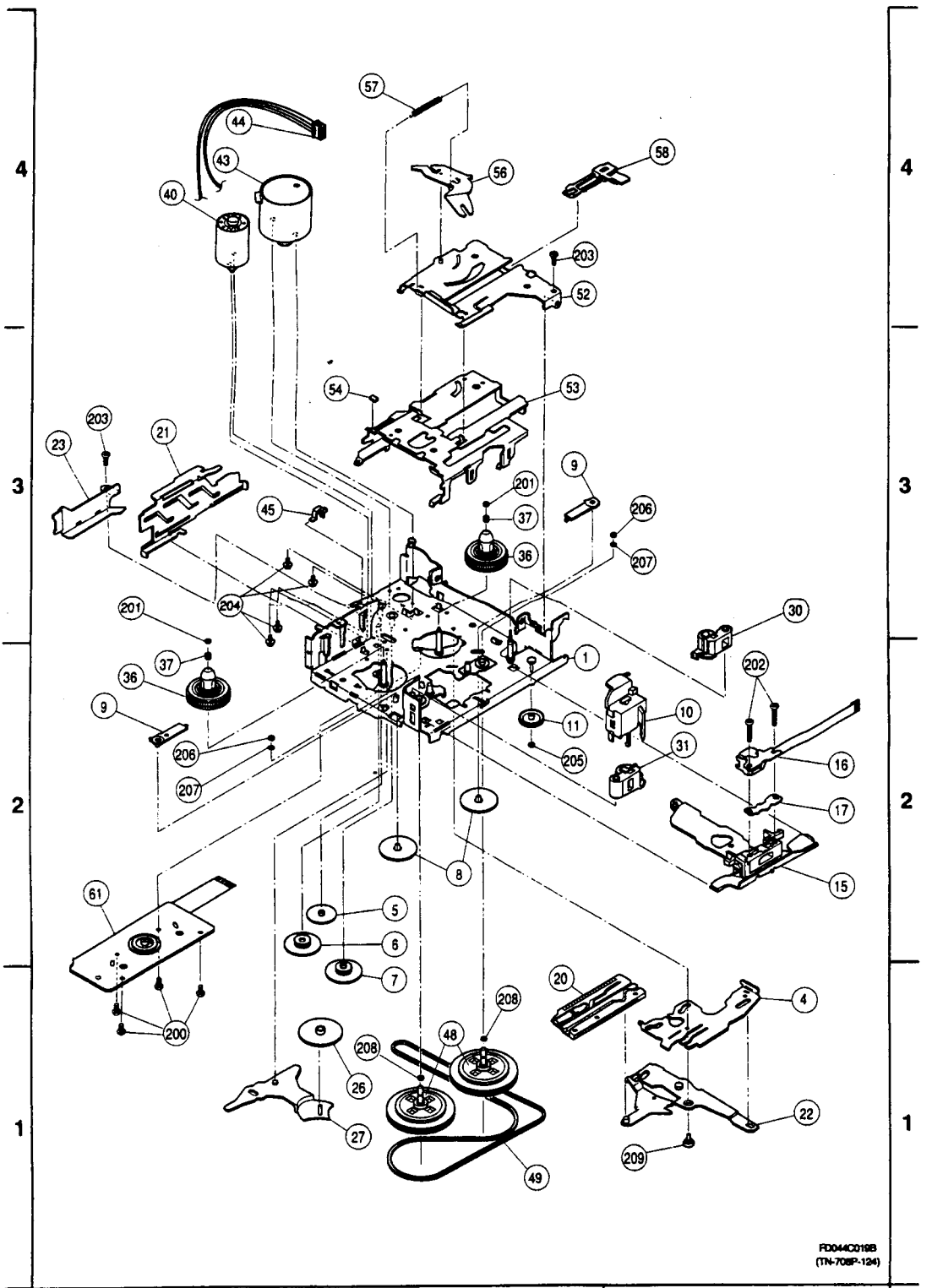

■ Numbers in ○ are indicated REF.No.in the REPLACEMENT PARTS LIST

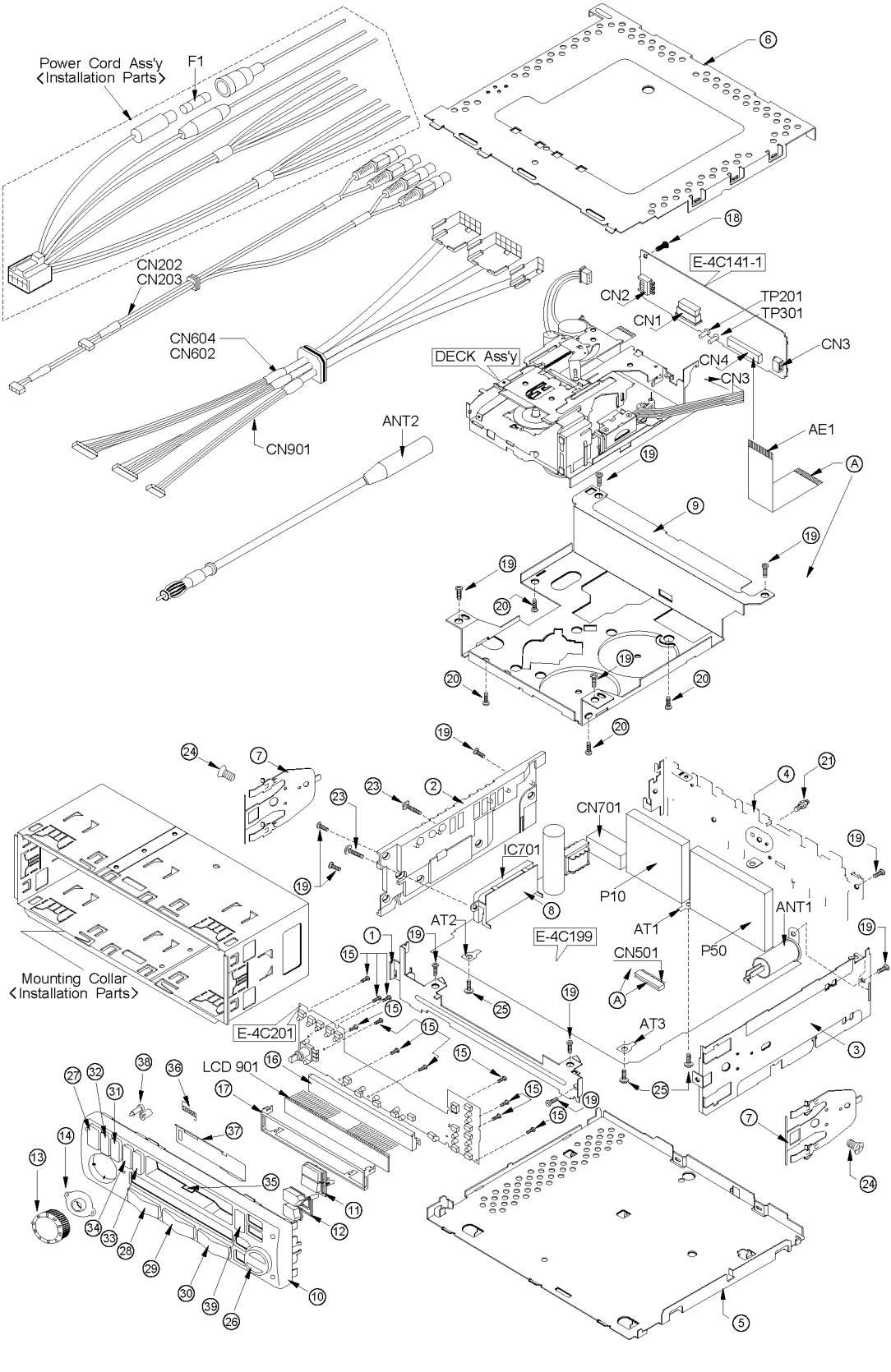

IC701 AN78N05

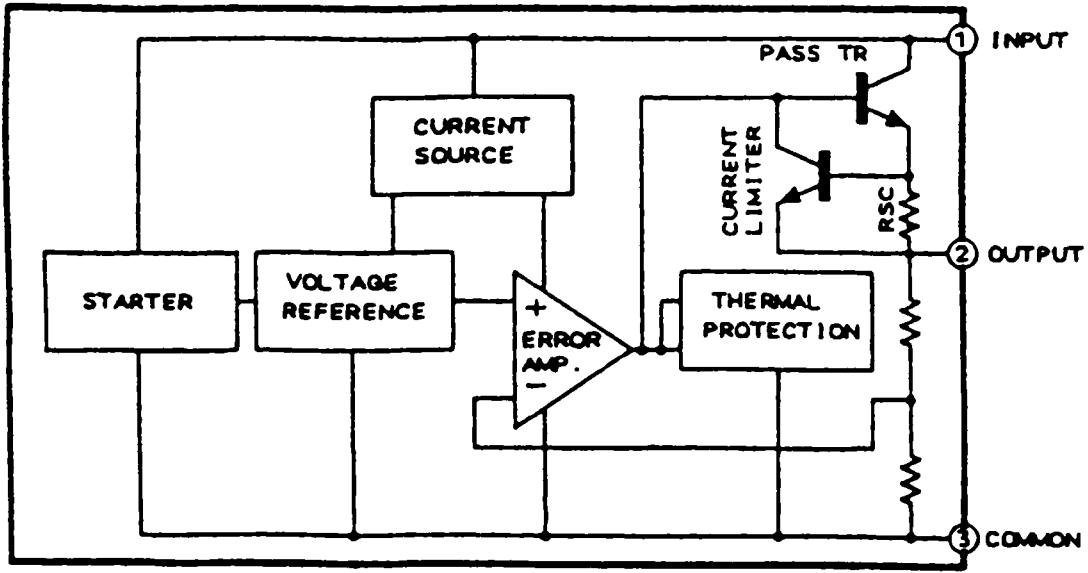

IC1 YEAMLB1641

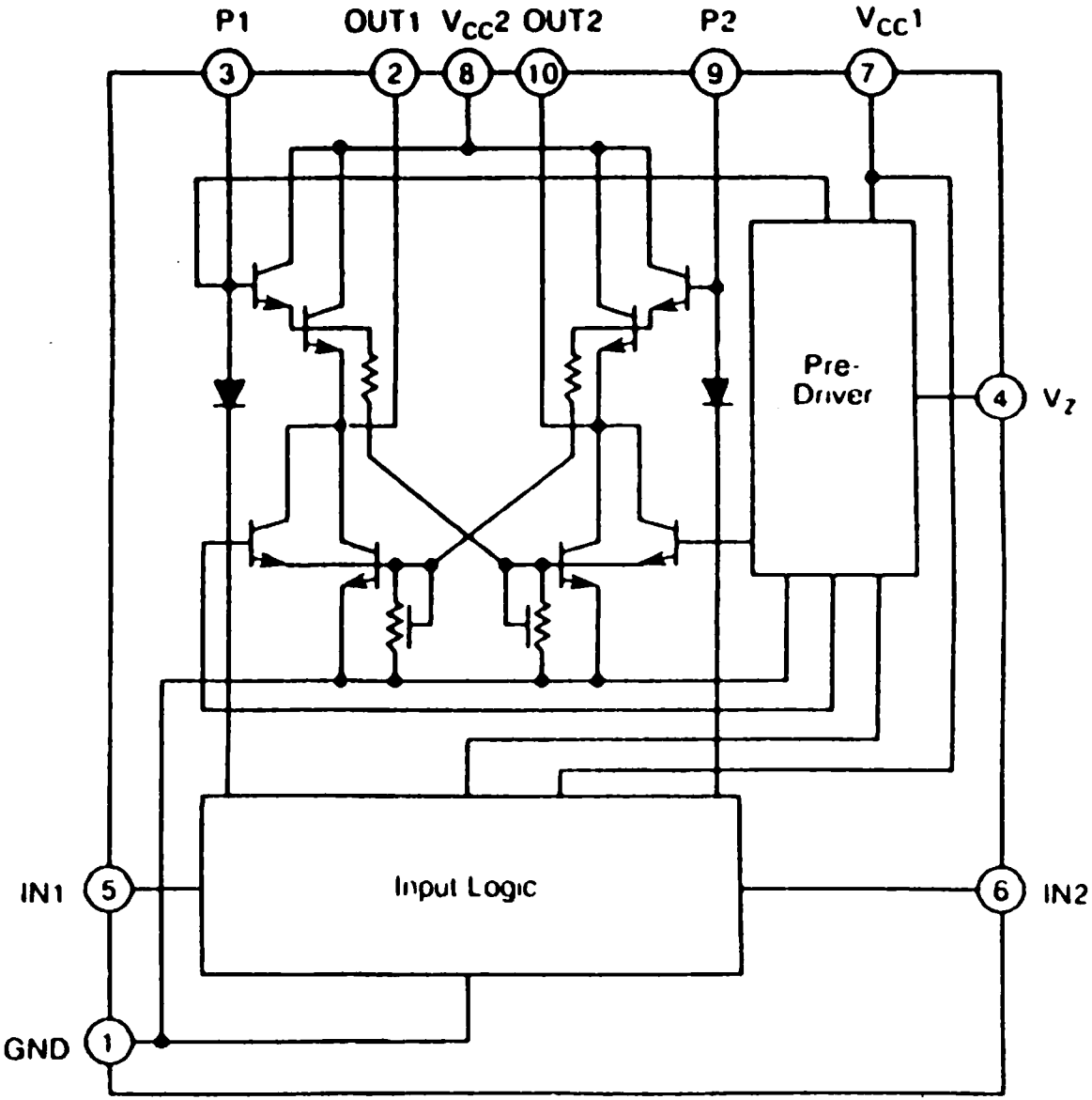

IC2 YEAMCXA2510Q

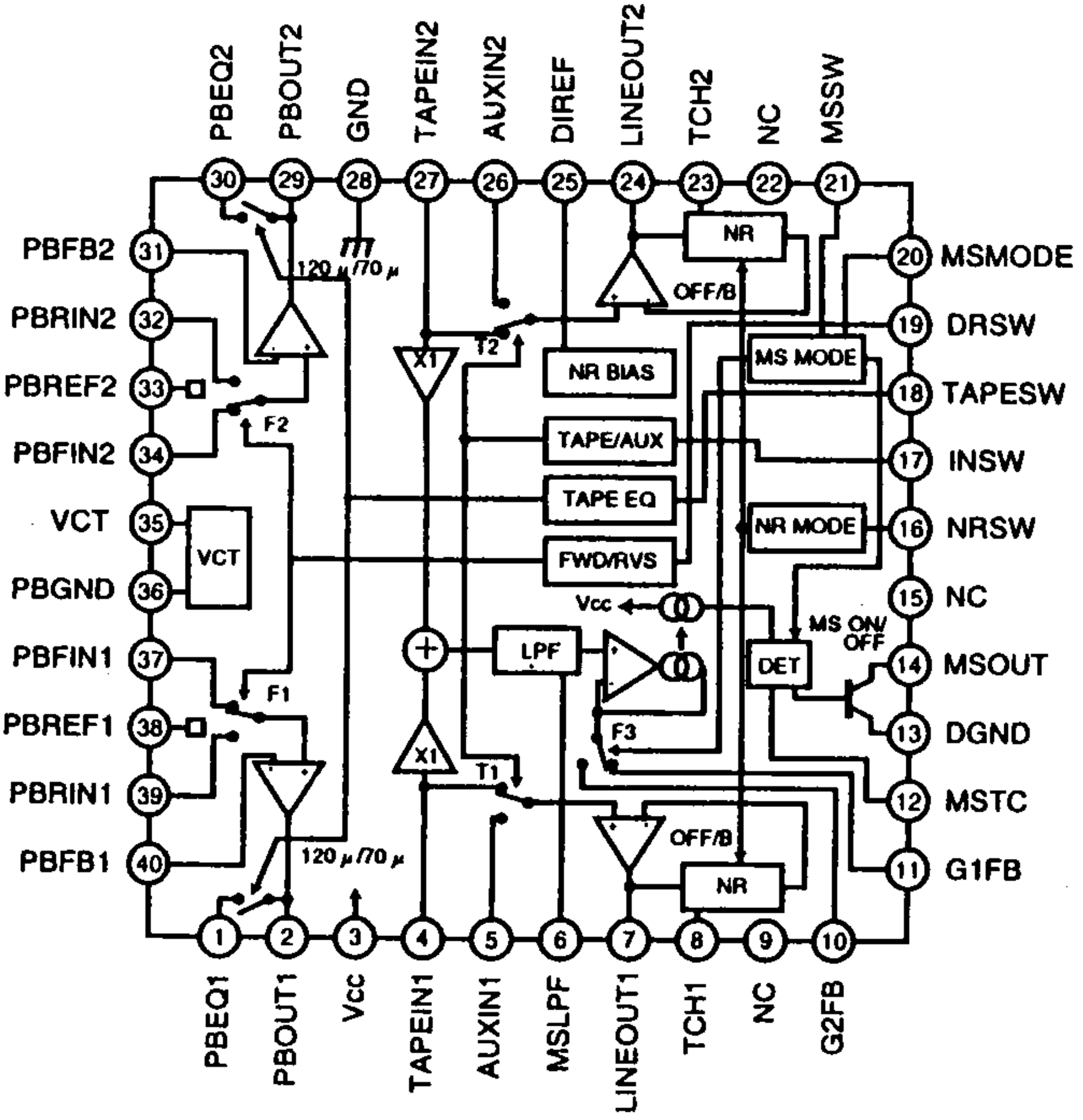

IC204 YEAMBU4066F2

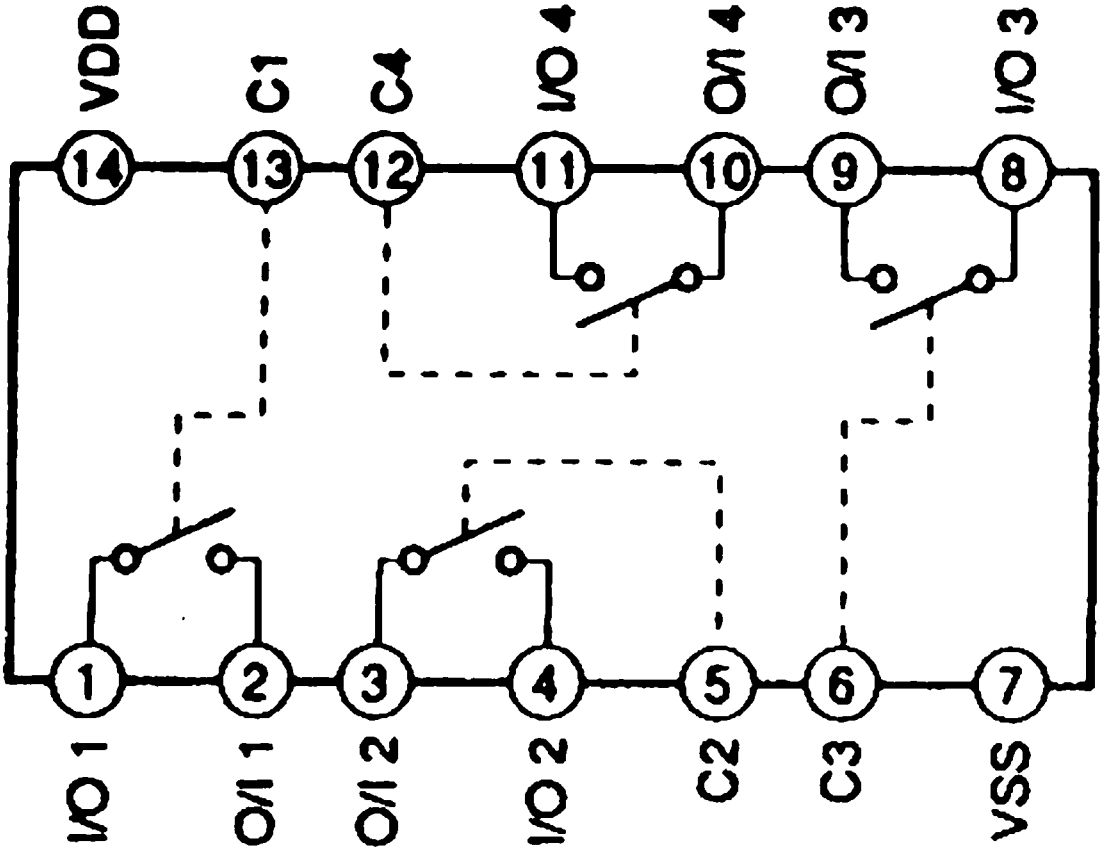

IC602 YEAMTC4584FN

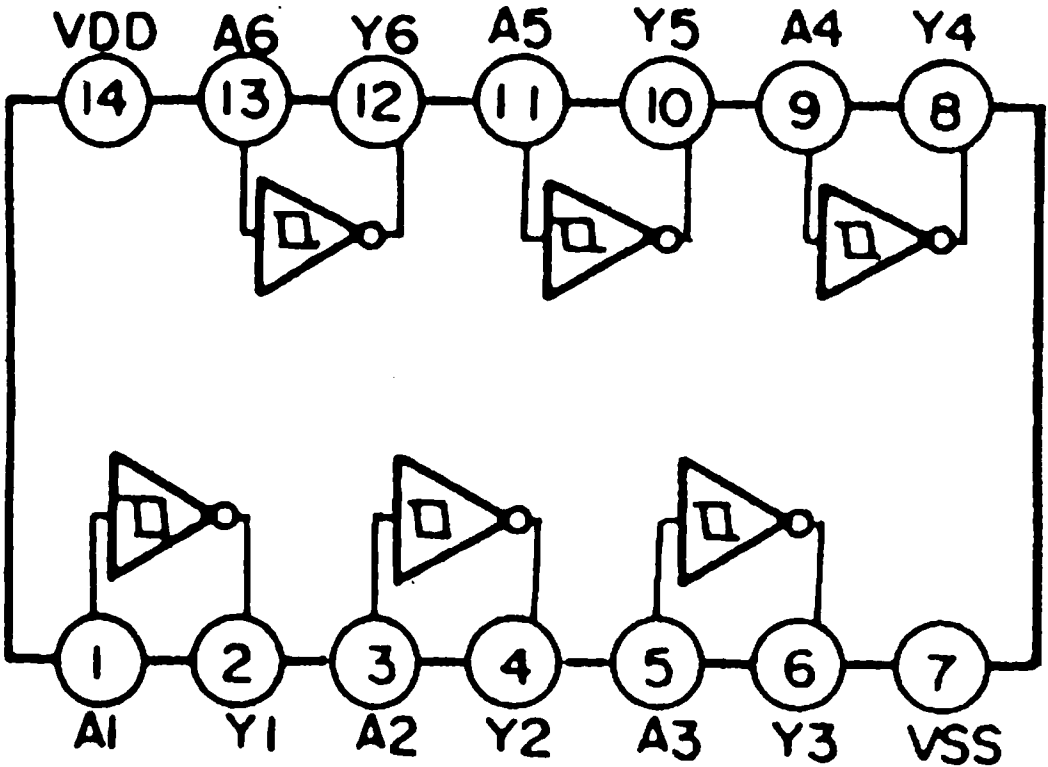

IC205 YEAMEA6320TT

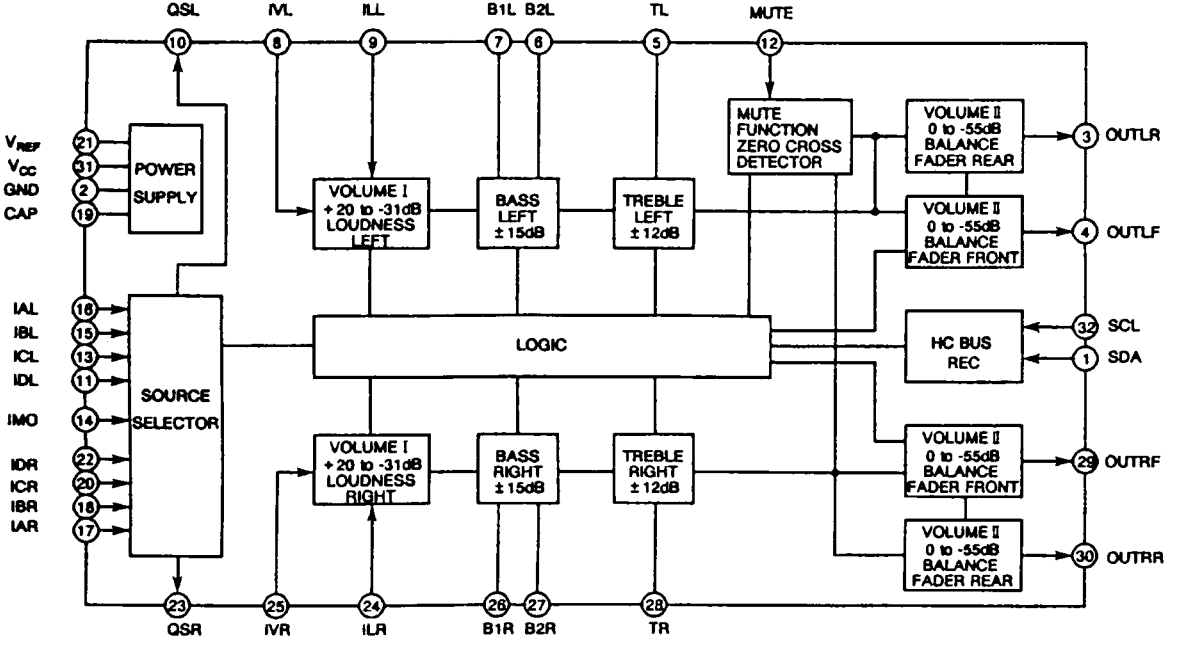

IC203 AN6552S-E1

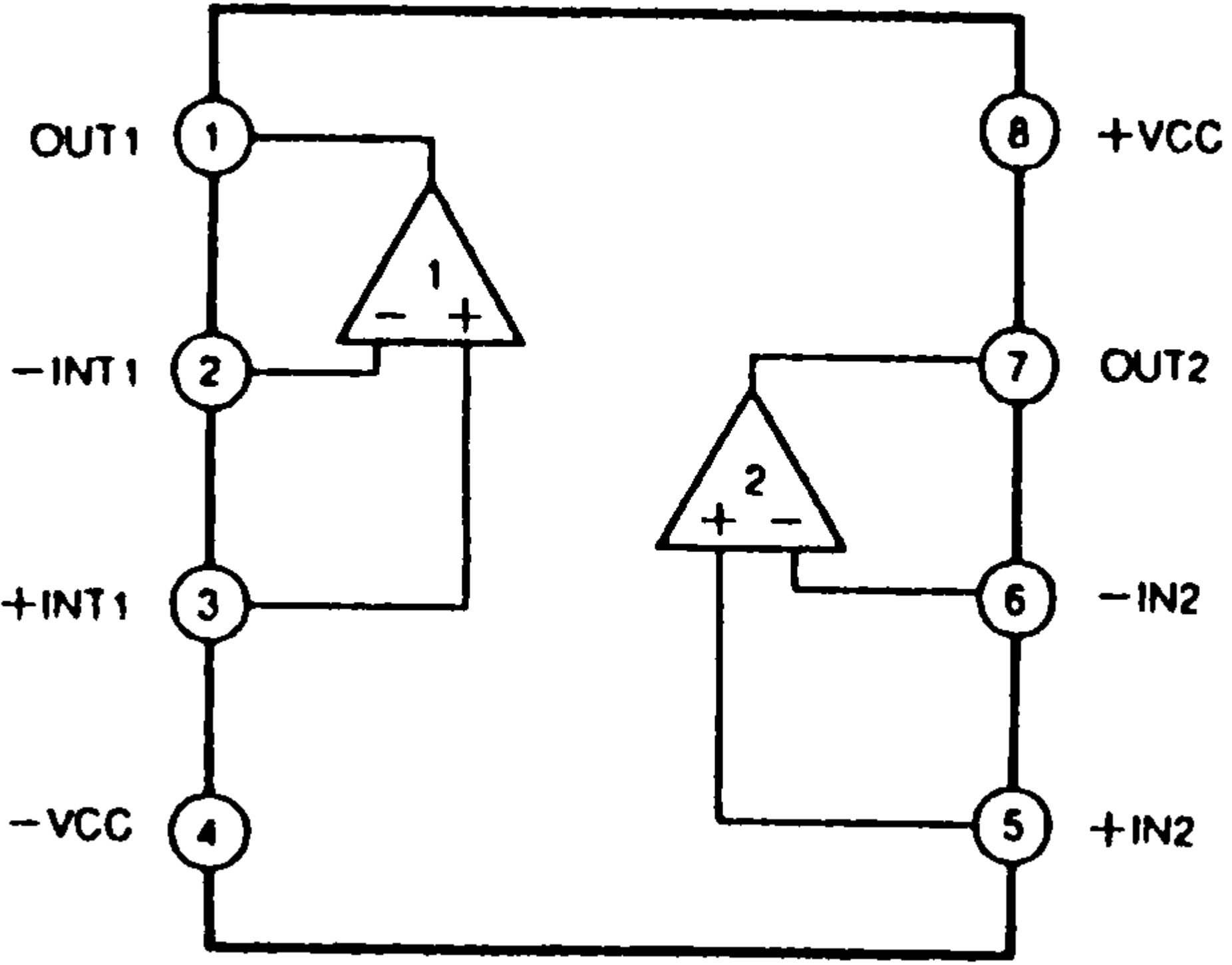

IC902 YEAMSBX8035F

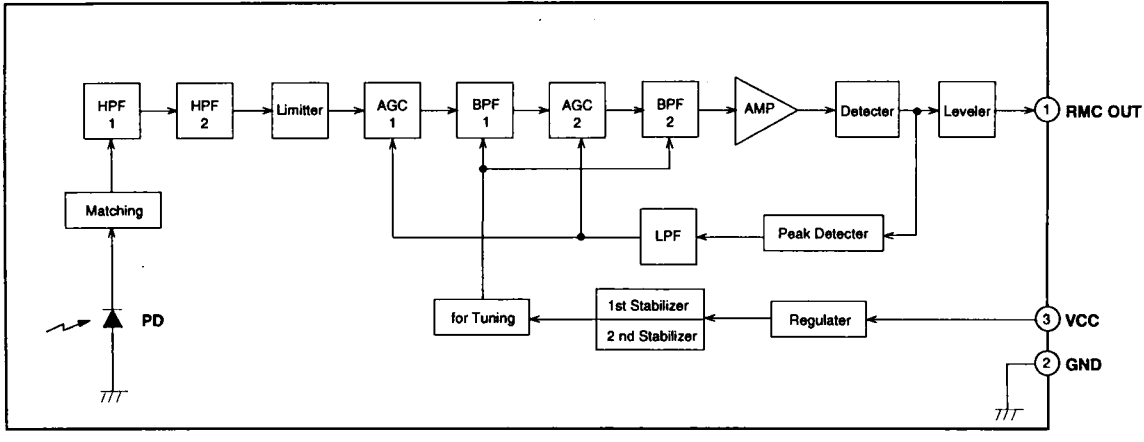

IC270 YEAMTDA8571J

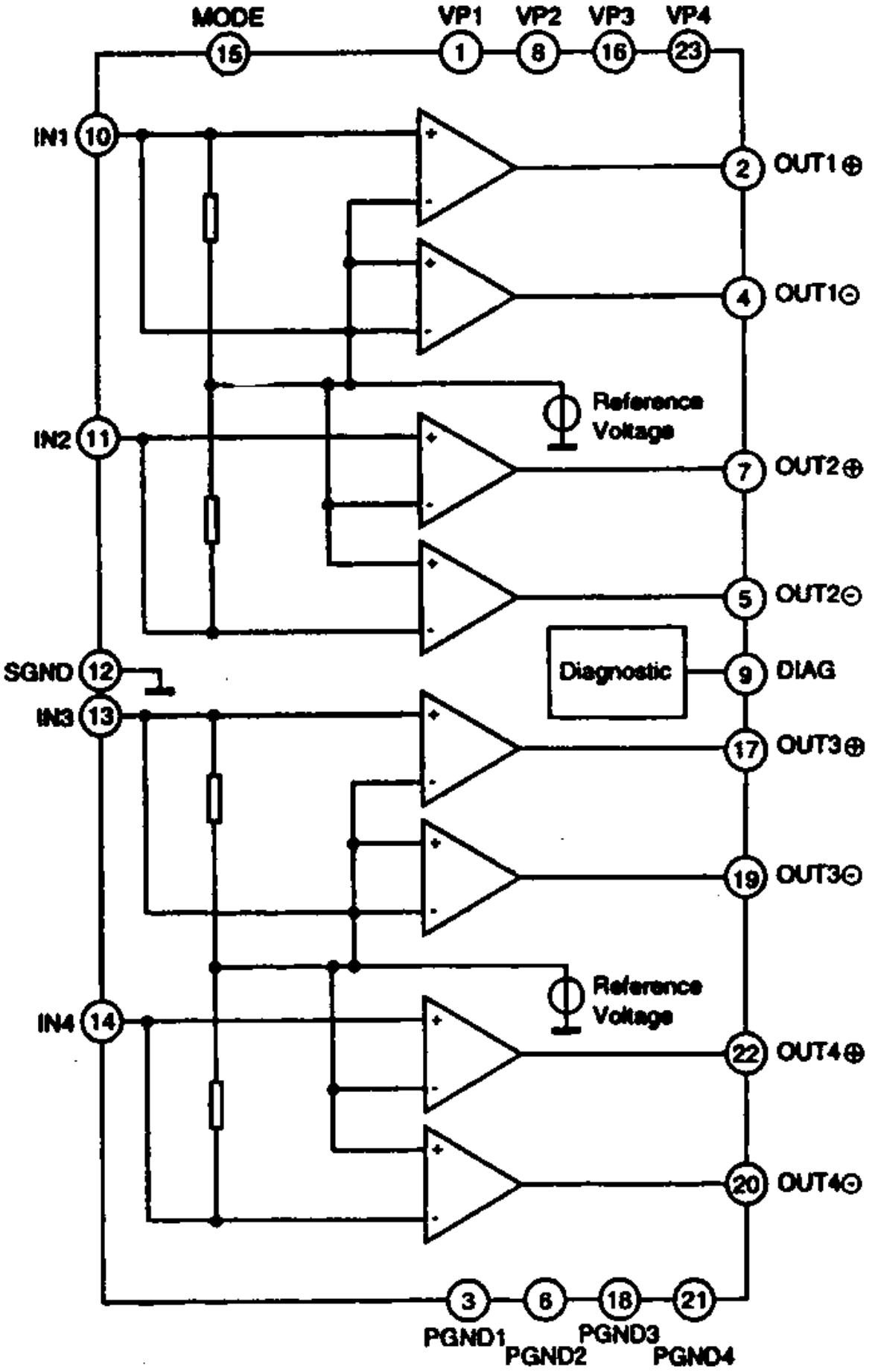

IC800 YEAMM51957AL

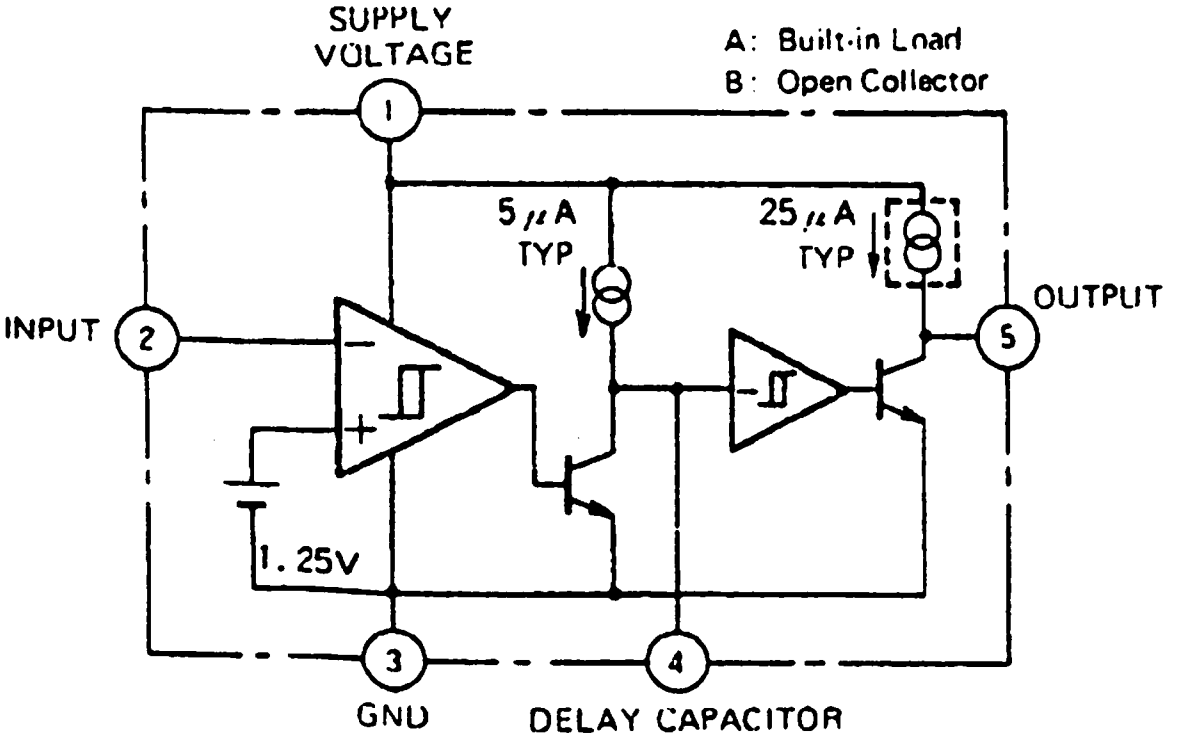

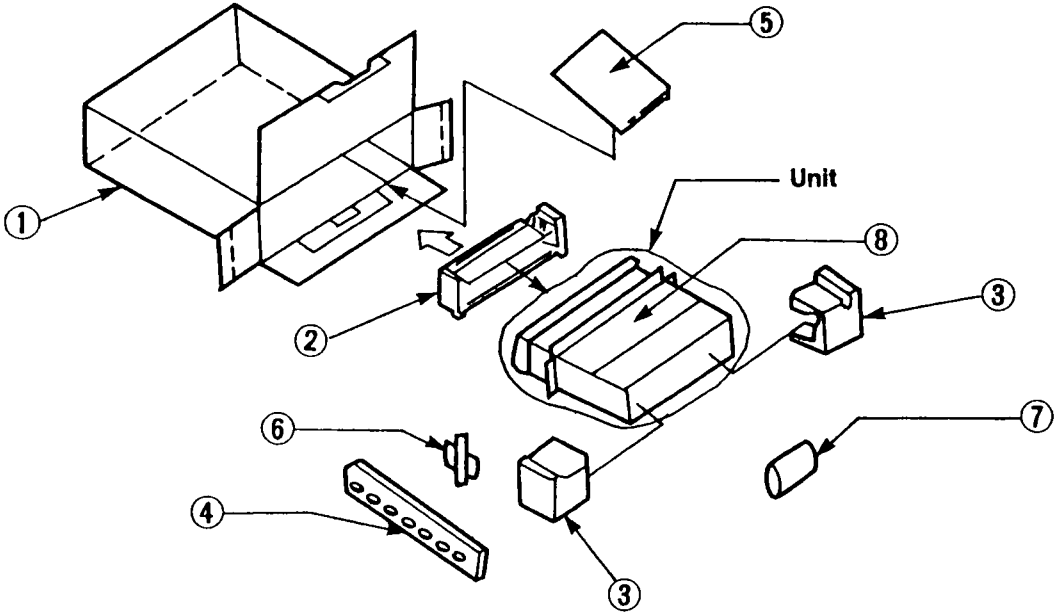
5
Unit
1
8
3
2
6
7
4
3

Note:

1. Be sure to make your orders of replacement parts according to this list.
2. Important safty notice: Component , indentified by ⚠ mark have special characteristics important for safety. when replacing any of these components, use only manufacturer's specified parts.
3. Location keys in the remarks column indicates the general location of the parts shown in the exploded drawing. as in a load map.
4. The marking (RTL) indicates that Retention Time is linited for this item. After the discontinuation of assembly in production, the item will continue to be availability is dependent on the type of assembly, and in accordance with the laws governing part and product retention. Afl the end of this period, the assembly will no longer be available.
5. "T" marks in remarks colum are indicated supply parts of TAMACO.

Note:

1. Be sure to make your orders of replacement parts according to this list.
2. Important safty notice: Component , indentified by ⚠ mark have special characteristics important for safety. when replacing any of these components, use only manufacturer's specified parts.
3. Location keys in the remarks column indicates the general location of the parts shown in the exploded drawing. as in a load map.
4. "T" marks in remarks colum are indicated supply parts of TAMACO.

E-4C141-1

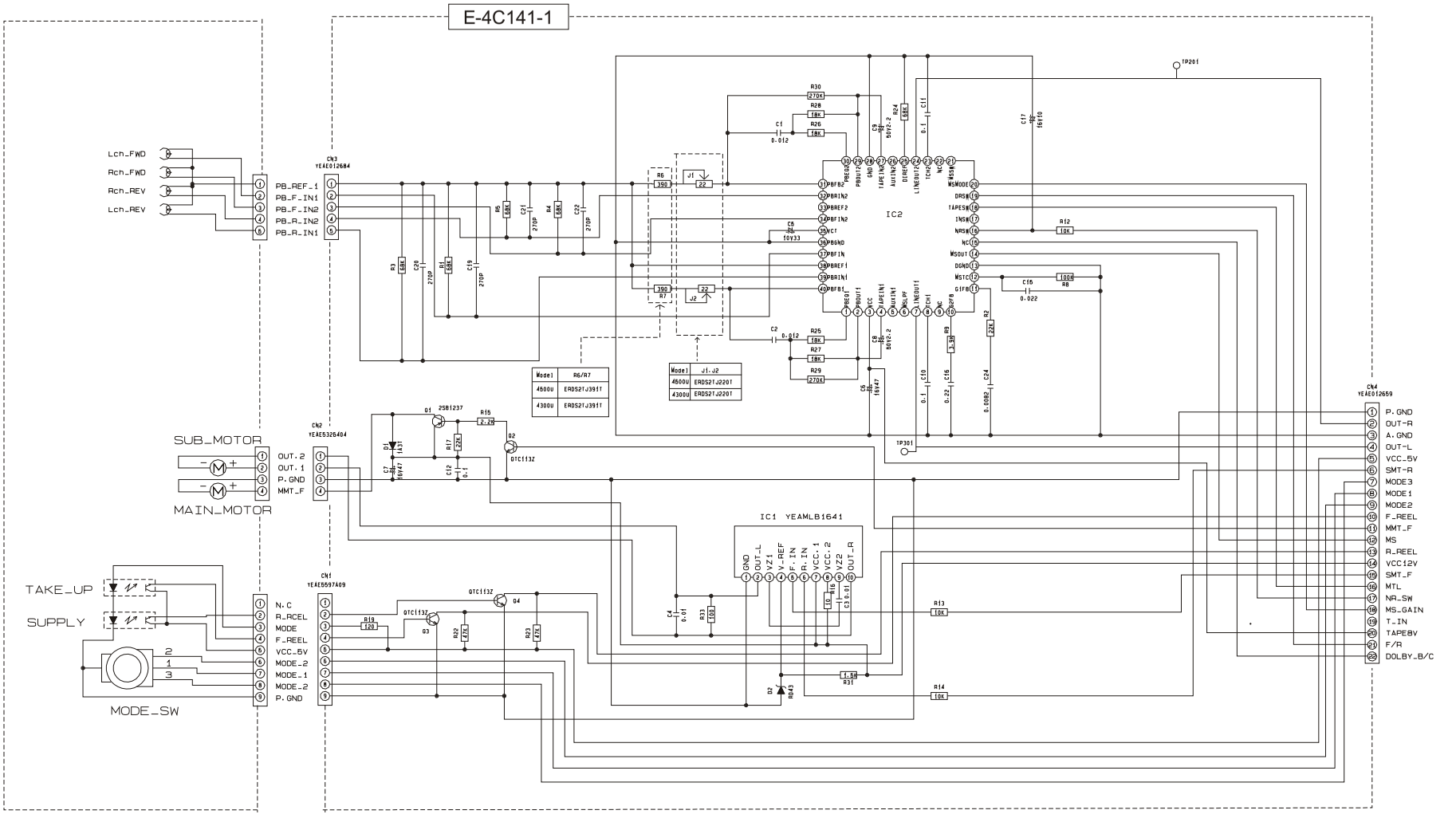
Lch_FWD
Rch_FWD
Rch_REV
Lch_REV
CN3
YEAE012684
PB_REF_1
PB_F_IN1
PB_F_IN2
PB_R_IN2
PB_R_IN1
IC2
TP201
TP301
CN4
YEAE012659
P.GND
OUT-R
A.GND
OUT-L
VCC_5V
SMT-R
MODE3
MODE1
MODE2
F_REEL
MMT_F
MS
R_REEL
VCC12V
SMT_F
MTL
NR_SW
MS_GAIN
T_IN
TAPEBV
F/R
DOLBY_B/C
SUB_MOTOR
MAIN_MOTOR
CN2
YEAE026404
OUT.2
OUT.1
P.GND
MMT_F
Q1
2SB1237
Q2
DTC113Z
Q3
DTC113Z
Q4
DTC113Z
IC1 YEAMLB1641
GND
OUT_L
VZ1
V_REF
F_IN
R_IN
VCC_1
VCC_2
VZ2
OUT_R
TAKE_UP
SUPPLY
CN1
YEAE0597A09
N.C
R_REEL
MODE
F_REEL
VCC_5V
MODE_2
MODE_1
MODE_2
P.GND
MODE_SW
Model
R6/R7
4500U
ERDS2TJ391T
4300U
ERDS2TJ391T
Model
J1.J2
4500U
ERDS2TJ220T
4300U
ERDS2TJ220T

E-4C201

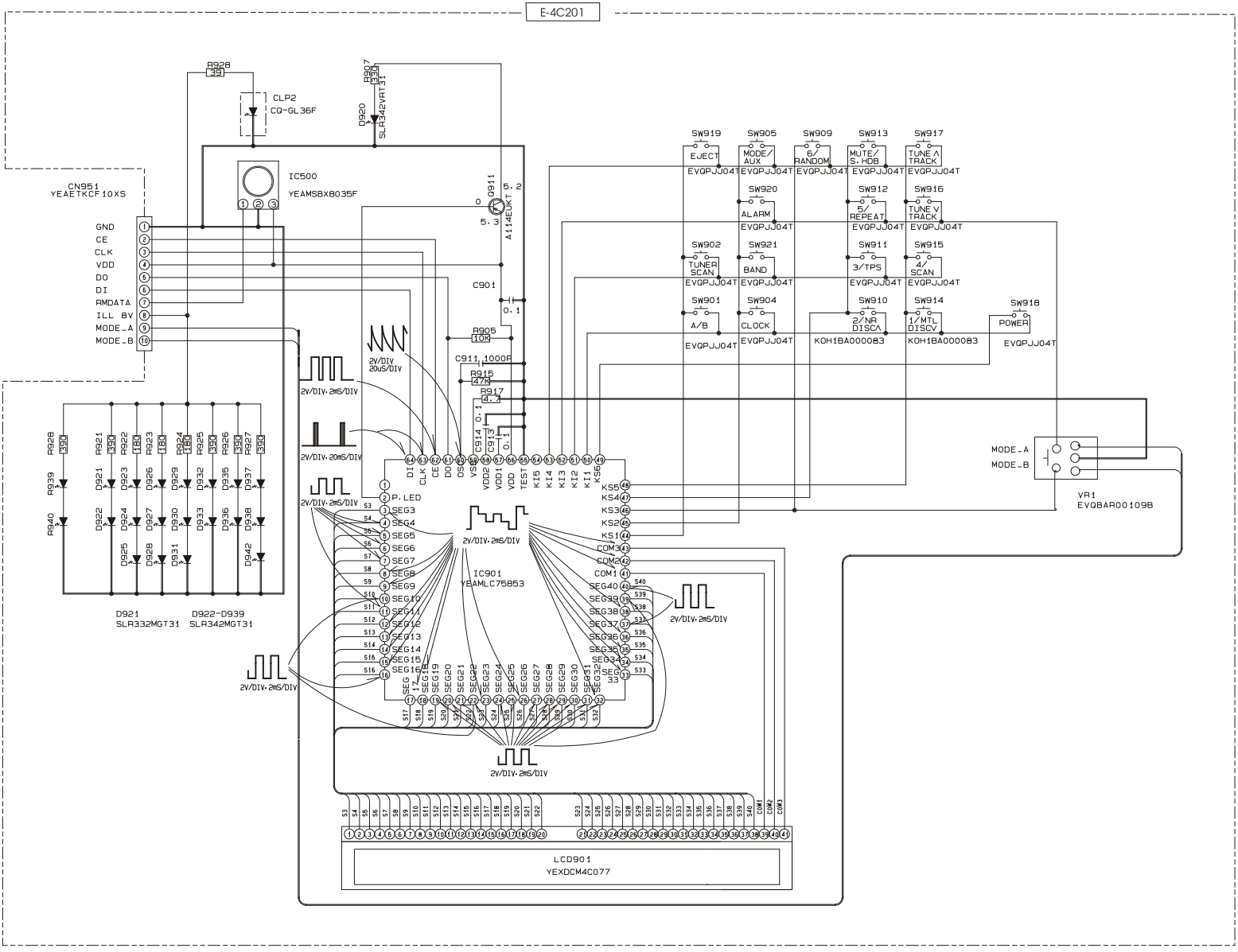
R928
39
CLP2
CQ-GL36F
R907
390
R908
390
D920
SLR342VRT31
IC500
YEAMSBXB035F
CN951
YEAETKCF10XS
GND
CE
CLK
VDD
DO
DI
RMDATA
ILL 8V
MODE_A
MODE_B
C911
A114EUK7
5.2
5.3
C901
0.1
R905
10k
C911 1000P
R915
475
R917
4.7
C914 0.1
C913
0.1
2V/DIV
20uS/DIV
2V/DIV·2mS/DIV
2V/DIV·20mS/DIV
P.LED
SEG3
SEG4
SEG5
SEG6
SEG7
SEG8
SEG9
SEG10
SEG11
SEG12
SEG13
SEG14
SEG15
SEG16
SEG17
SEG18
SEG19
SEG20
SEG21
SEG22
SEG23
SEG24
SEG25
SEG26
SEG27
SEG28
SEG29
SEG30
SEG31
SEG32
SEG33
IC901
YEAMLC75853
SW919
EJECT
EVQPJJ04T
SW905
MODE/AUX
EVQPJJ04T
SW909
6/RANDOM
EVQPJJ04T
SW913
MUTE/S.HDB
EVQPJJ04T
SW917
TUNE∧TRACK
EVQPJJ04T
SW920
ALARM
EVQPJJ04T
SW912
5/REPEAT
EVQPJJ04T
SW916
TUNE∨TRACK
EVQPJJ04T
SW902
TUNER SCAN
EVQPJJ04T
SW921
BAND
EVQPJJ04T
SW911
3/TPS
EVQPJJ04T
SW915
4/SCAN
EVQPJJ04T
SW901
A/B
EVQPJJ04T
SW904
CLOCK
EVQPJJ04T
SW910
2/NR DISC∧
KOH1BA000083
SW914
1/MTL DISC∨
KOH1BA000083
SW918
POWER
EVQPJJ04T
MODE_A
MODE_B
VR1
EVQBAR00109B
D921
SLR332MGT31
D922-D939
SLR342MGT31
LCD901
YEXDCM4C077

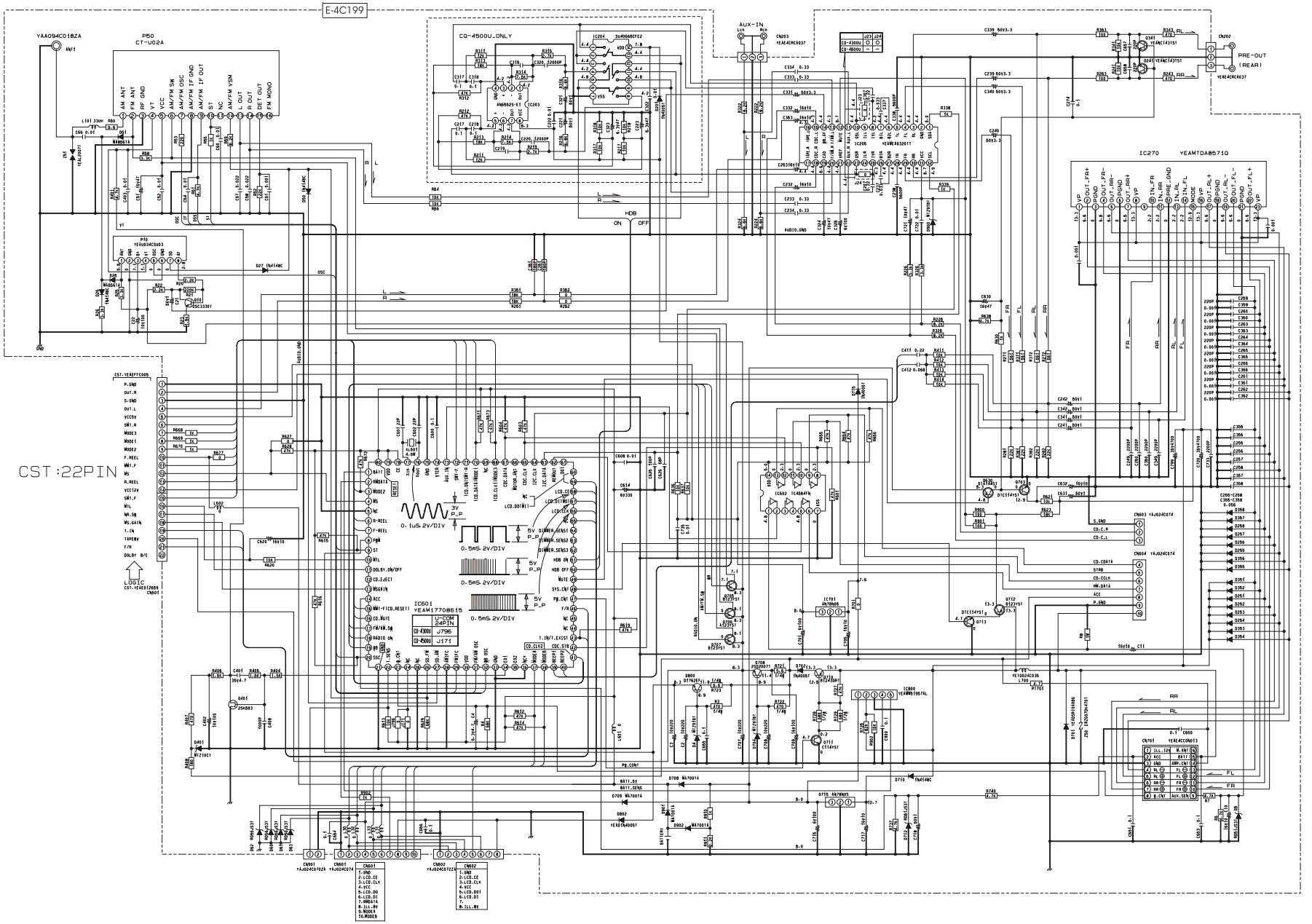
E-4C199
CST:22PIN
LOGIC
CN601
CN602
CN603
CN604
CN701
CN801
CN901
IC601
YEAM1770B615
IC270
YEAMTDA8571Q
IC860
YEAMM61957AL
IC701
IC801
IC205
IC204
IC263
P50
CT-U02A
YAA094C018ZA
CG-4500U_ONLY
AUX-IN
PRE-OUT
(REAR)
HDB
ON
OFF
AUDIO.GND
U-COM
24PIN
CD-4300U J796
CD-4500U J171
CD-4300U J24
CD-4500U 1

Specifications *

General

Power Supply	: 12V DC (11V-16V) Test Voltage 14.4V, Negative ground
Maximum Power Output	: 37 Wx4 channel at 400Hz, Volume Control maximum
Power Output	: 18 W per channel into 4 ohms, 40 to 30,000Hz, at 3% THD
Tone Action	: Bass; ± 10 dB at 100Hz Treble; ± 10 dB at 10kHz
Current Consumption	: Less than 2.5 A (0.5W 4-Speaker)
Speaker Impedance	: 4 Ω (4-8Ω acceptable)

AM Radio

Frequence Range	: 530 - 1,710kz
Useable Sensitivity	: 28 dB/μV (25 μV/ S/N 20dB)

FM Stereo Radio

Frequency Range	: 87.9 - 107.9MHz
Useable Sensitivity	: 12 dBf. (1.1μV/75 Ω, S/N 30 dB)
50 dB Quieting Sensitivity	: 17 dBf. (2.0 μV/75Ω)
Frequency Response	: 30 - 15,000Hz ± 3dB
Alternate Channel Sensitivity	: 75 dB
Stereo Separation	: 35 dB at 1,000Hz
Signal/Noise Ratio	: 70 dB (Mono)

WB Radio

Freuency Range	: 162.40 - 162.55MHz
Useable Sensitivity	: 3 dB (S/N 20dB)
Signal/Noise Ratio	: 50 dB (40 dB/μV)

Tape Player

Reproduction System	: 4- track, 2-program stereo
Tape Speed	: 1-7/8" /sec (4.76cm/sec)
FF/REW Time	: Less than 110 sec (C-60)
Frequency Responce	:35-14,000Hz(±3dB,normal) 35-17,000Hz(±3dB,metal)
Wow and Fluter	: 0.12% (WRMS)
Signal/Noise Ratio	: 52 dB 62 dB (Dolby B NR ON)

Dimentions **	: 7"x 1-15/16" x 5-7/8" (178 x 50 x 150mm)
Weight **	: 3 lbs. 8 oz (1.6kg)

* Specifications and the design are subject to possible modification
** without notice due to improvements.
Dimentions and weight shown are approximate.
*** Above specifications comply with EIA standards.

P10 YEAU034CSU02

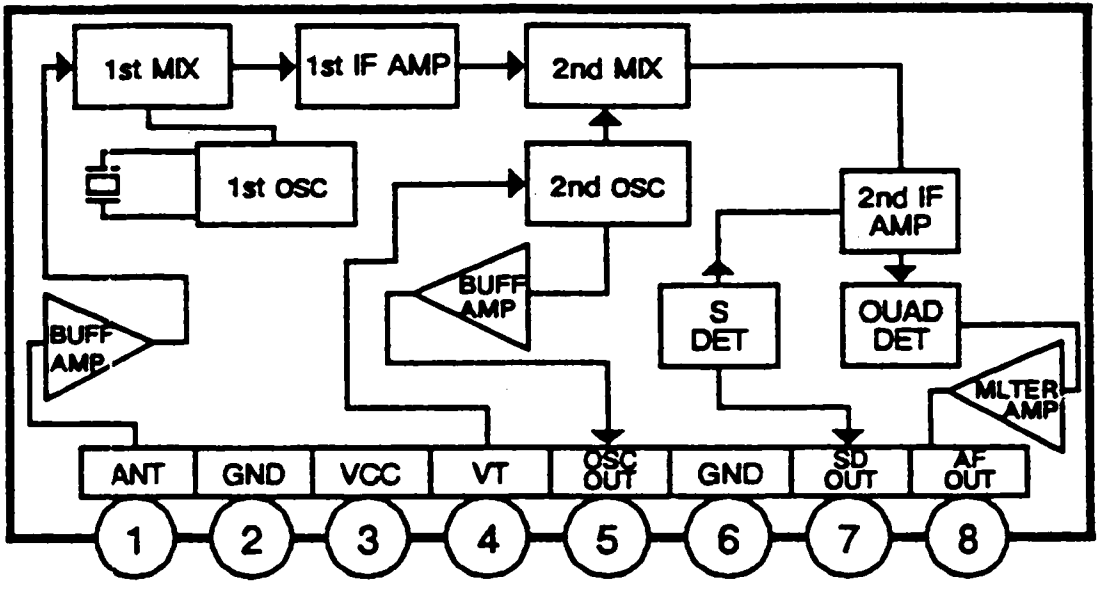

P50 YEAU4CMXU01

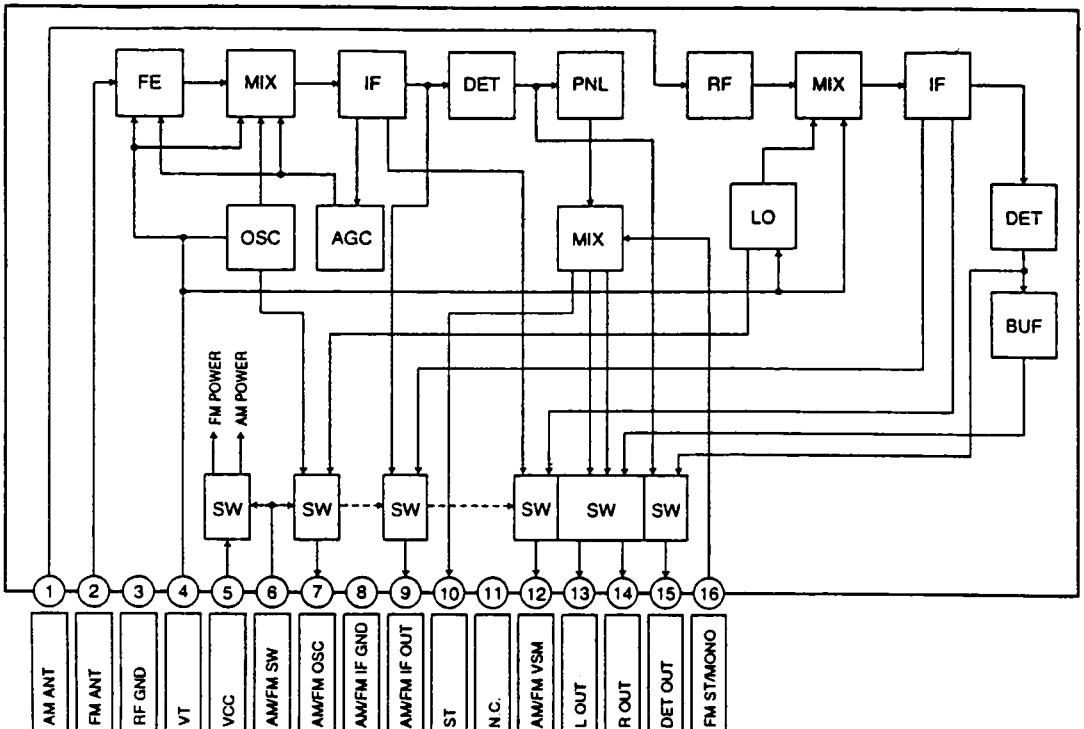

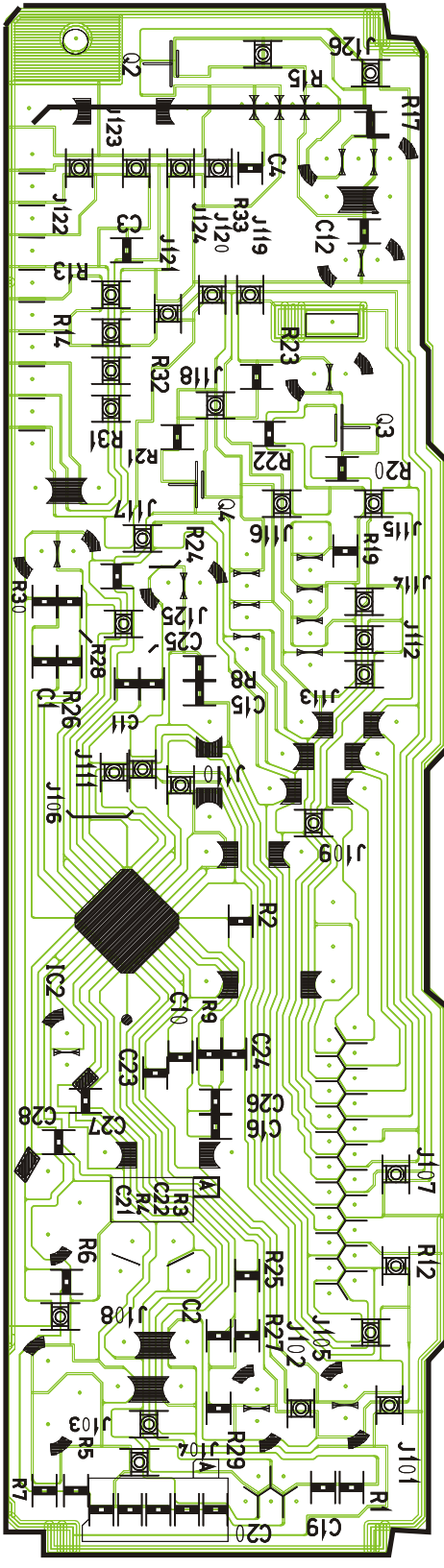

[E-4C141-1] [Bottom View]

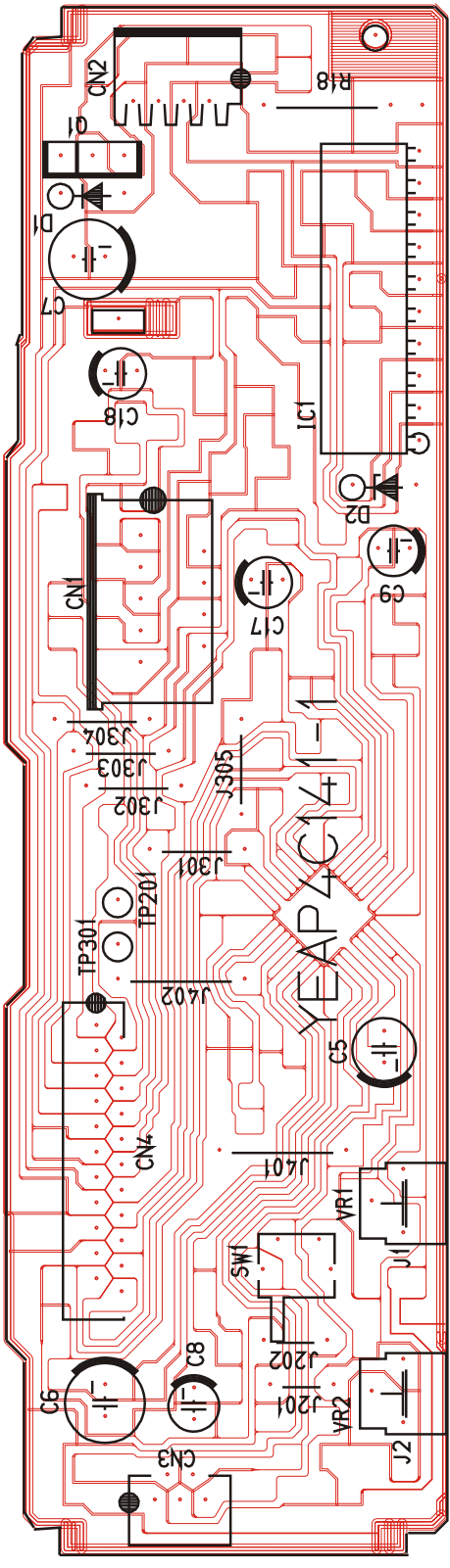

[E-4C141-1] [Top View]

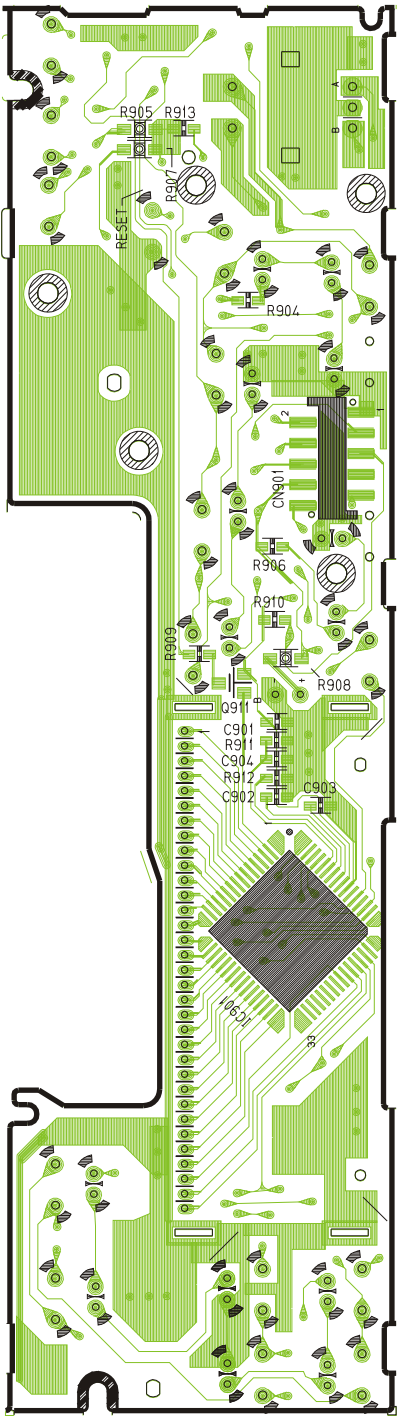

[E-4C206] [BOTTOM VIEW]

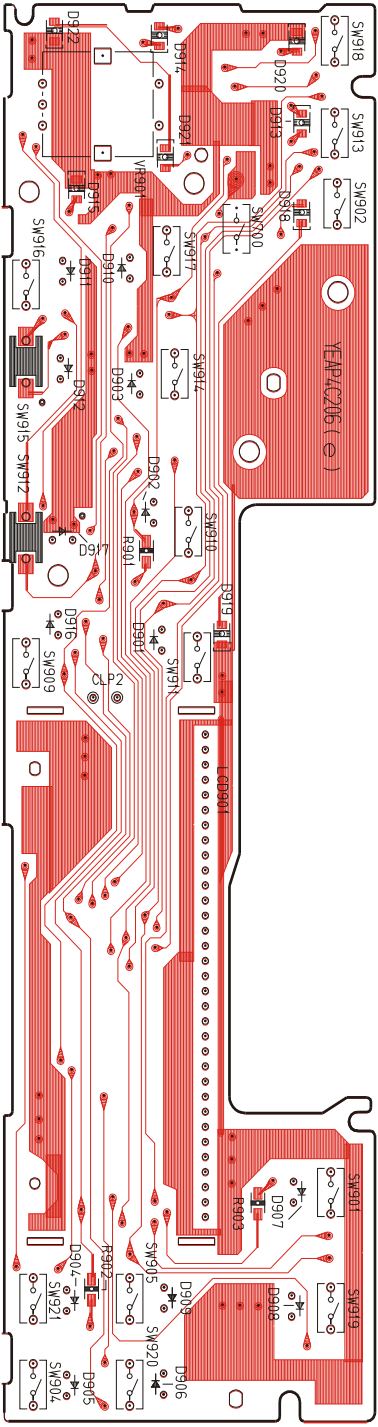

[E-4C206] [TOP VIEW]

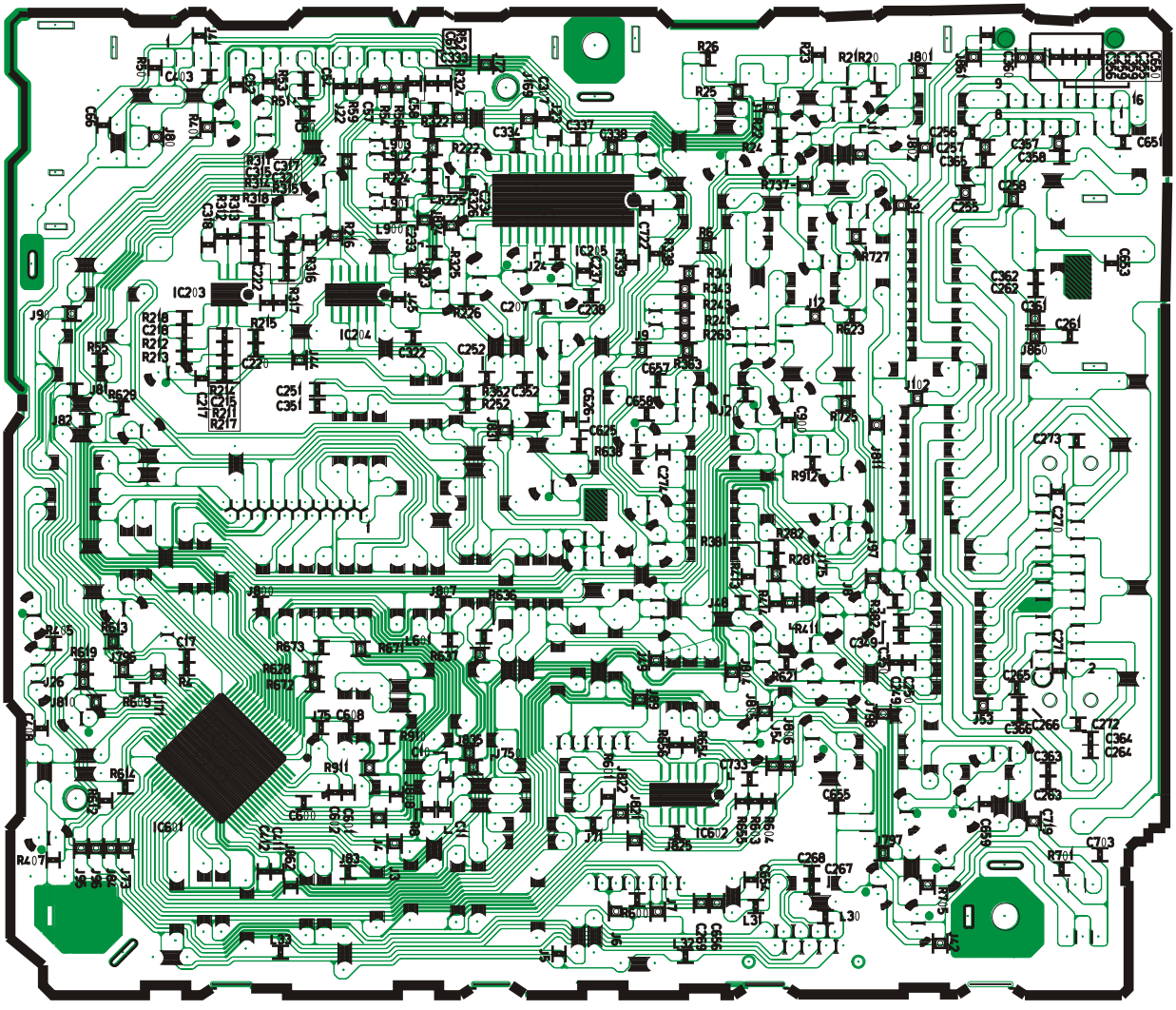

[E-4C199] [Bottom View]

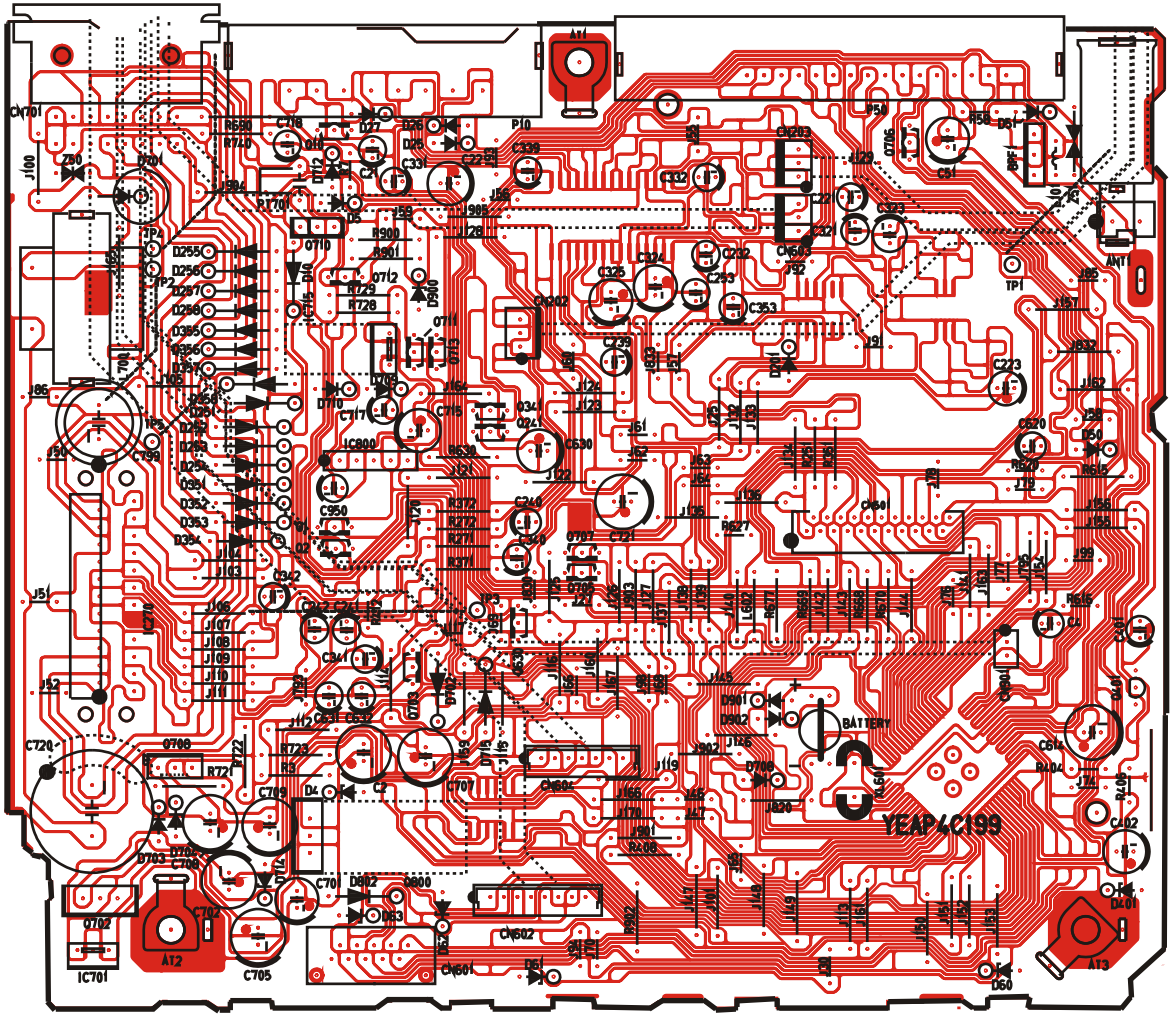

[E-4C199] [Top View]