APM
DISP
PWR
BAND
MODE
HD SERIES
WEATHER BAND
CLK
ALM
Panasonic
CQ-4330U
LOUD
VOL
PUSH
SEL/SAT
BASS/TREB
BAL/FADER
MUTE
TUNE
SEEK
SCAN
ILL
DISC
CD SCAN
RPT
RDM
1 MTL
2 NR
3 TPS
4 REP
5 SKP
6

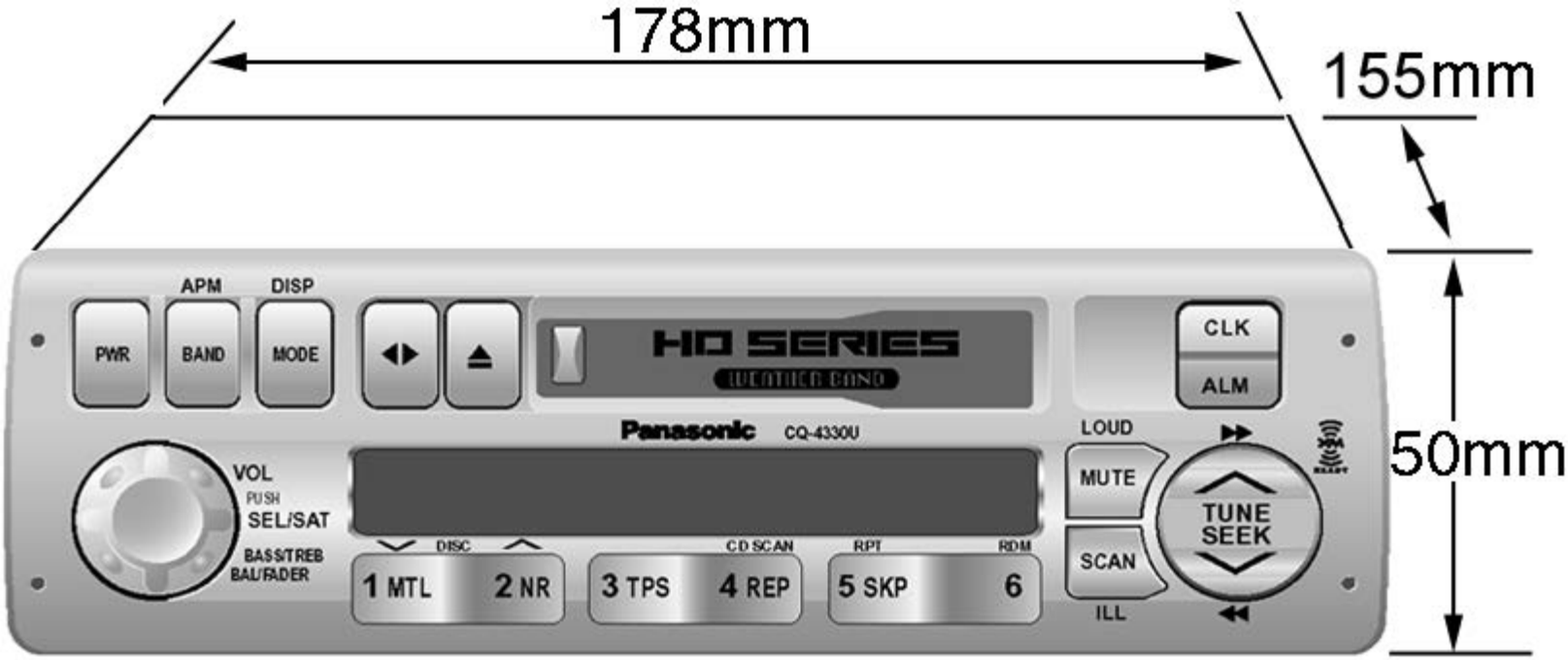
178mm
155mm
50mm
APM
DISP
PWR
BAND
MODE
HD SERIES
WEATHER BAND
CLK
ALM
Panasonic
CQ-4330U
LOUD
MUTE
SCAN
ILL
TUNE
SEEK
VOL
PUSH
SEL/SAT
BASS/TREB
BAL/FADER
DISC
1 MTL
2 NR
CD SCAN
3 TPS
4 REP
RPT
5 SKP
RDM
6

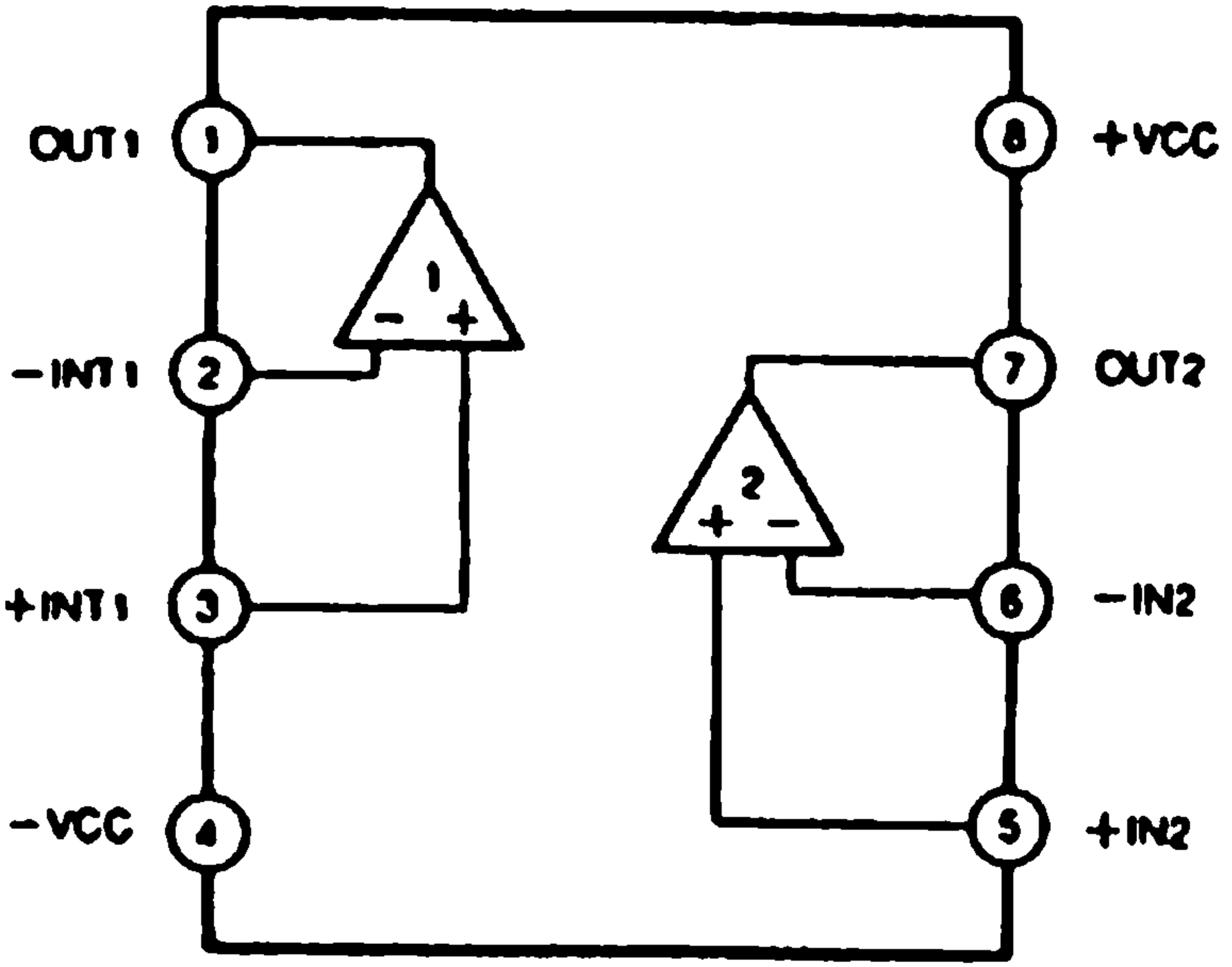
OUT1
1
-INT1
2
+INT1
3
-VCC
4
+VCC
8
OUT2
7
-IN2
6
+IN2
5
1
2

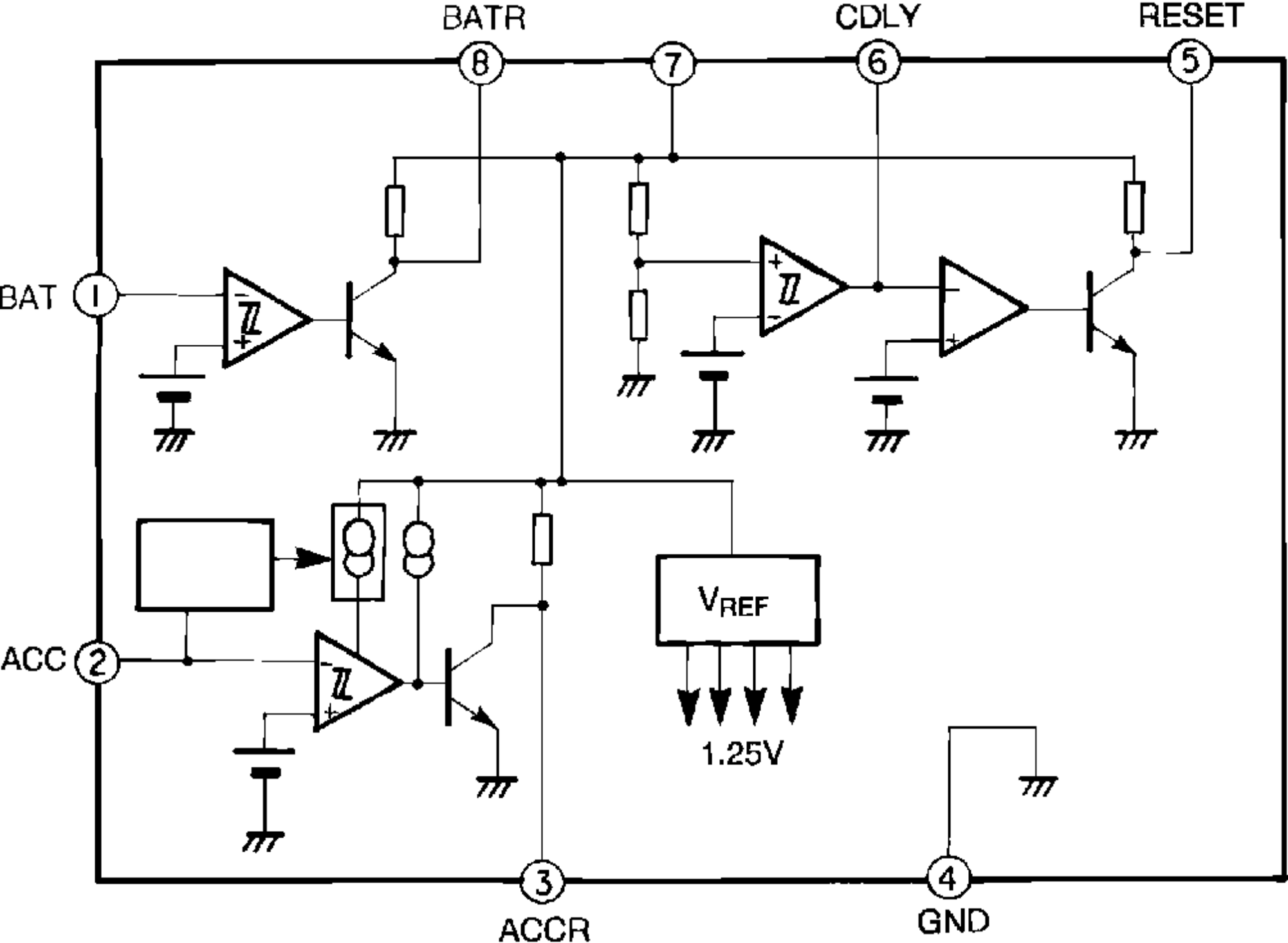
BATR
CDLY
RESET
8
7
6
5
BAT
1
ACC
2
V_{REF}
1.25V
3
ACCR
4
GND

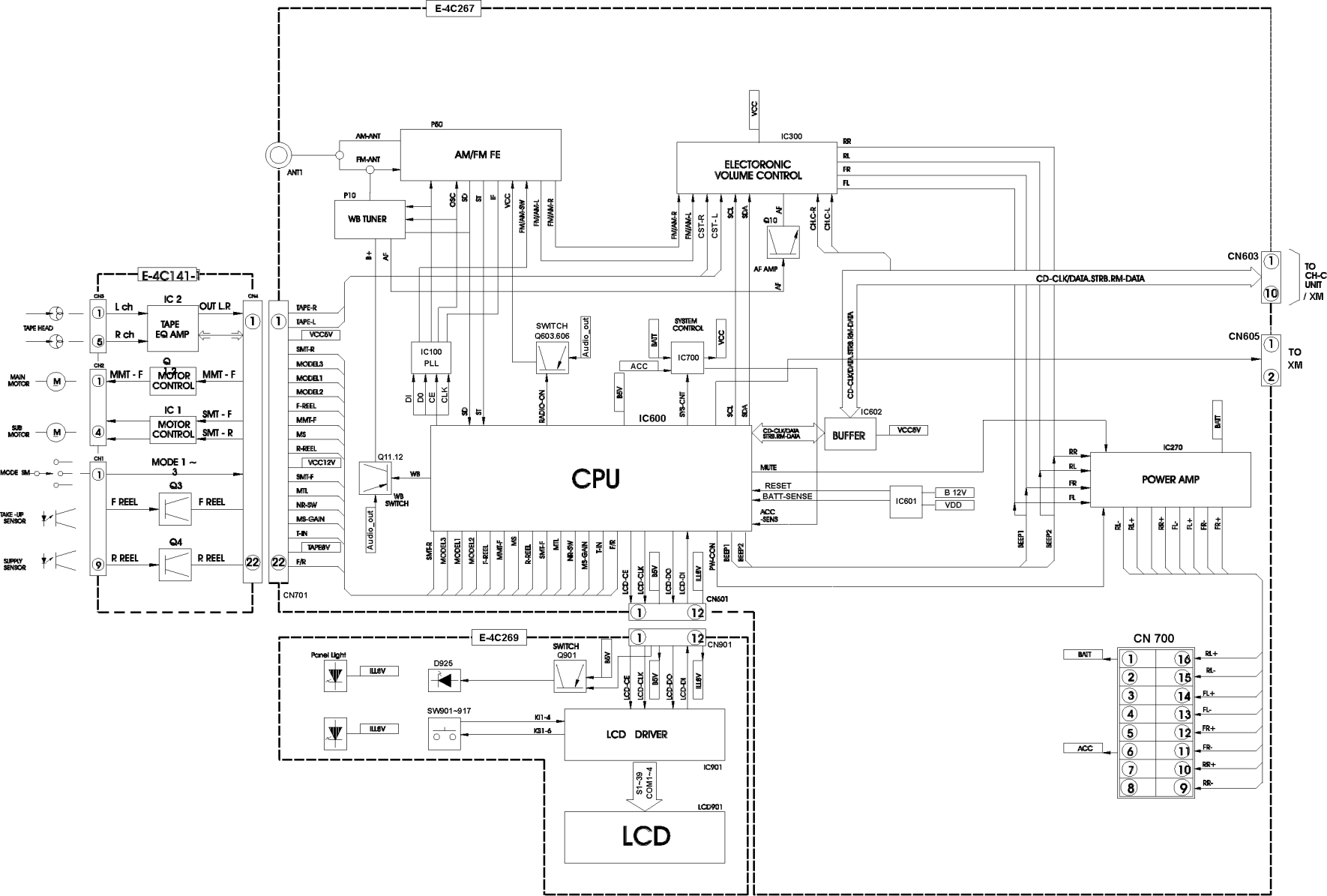
E-4C267
E-4C141-1
E-4C269
AM/FM FE
P50
AM-ANT
FM-ANT
ANT1
WB TUNER
P10
ELECTORONIC VOLUME CONTROL
IC300
VCC
RR
RL
FR
FL
Q10
AF AMP
CN603
TO CH-C UNIT / XIM
CD-CLK/DATA.STRB.RM-DATA
CN605
TO XIM
IC100 PLL
SWITCH Q603.606
Audio_out
SYSTEM CONTROL
IC700
ACC
BATT
IC600
CPU
IC602
BUFFER
VCC5V
IC270
POWER AMP
IC601
B 12V
VDD
MUTE
RESET
BATT-SENSE
ACC -SENS
Q11.12
WB SWITCH
CN701
CN601
CN901
TAPE HEAD
L ch
R ch
IC 2
TAPE EQ AMP
OUT L.R
MAIN MOTOR
MMT - F
Q
MOTOR CONTROL
SUB MOTOR
IC 1
SMT - F
SMT - R
MODE SM
MODE 1 ~ 3
TAKE -UP SENSOR
F REEL
Q3
SUPPLY SENSOR
R REEL
Q4
CN4
CN2
CN1
TAPE-R
TAPE-L
VCC5V
SMT-R
MODEL3
MODEL1
MODEL2
F-REEL
MMT-F
MS
R-REEL
VCC12V
SMT-F
MTL
NR-SW
MS-GAIN
T-IN
TAPE8V
F/R
Panel light
ILL6V
D925
SWITCH Q901
SW901~917
K11-4
K31-6
LCD DRIVER
IC901
S1~39 COM1~4
LCD901
LCD
CN 700
BATT
ACC
RL+
RL-
FL+
FL-
FR+
FR-
RR+
RR-

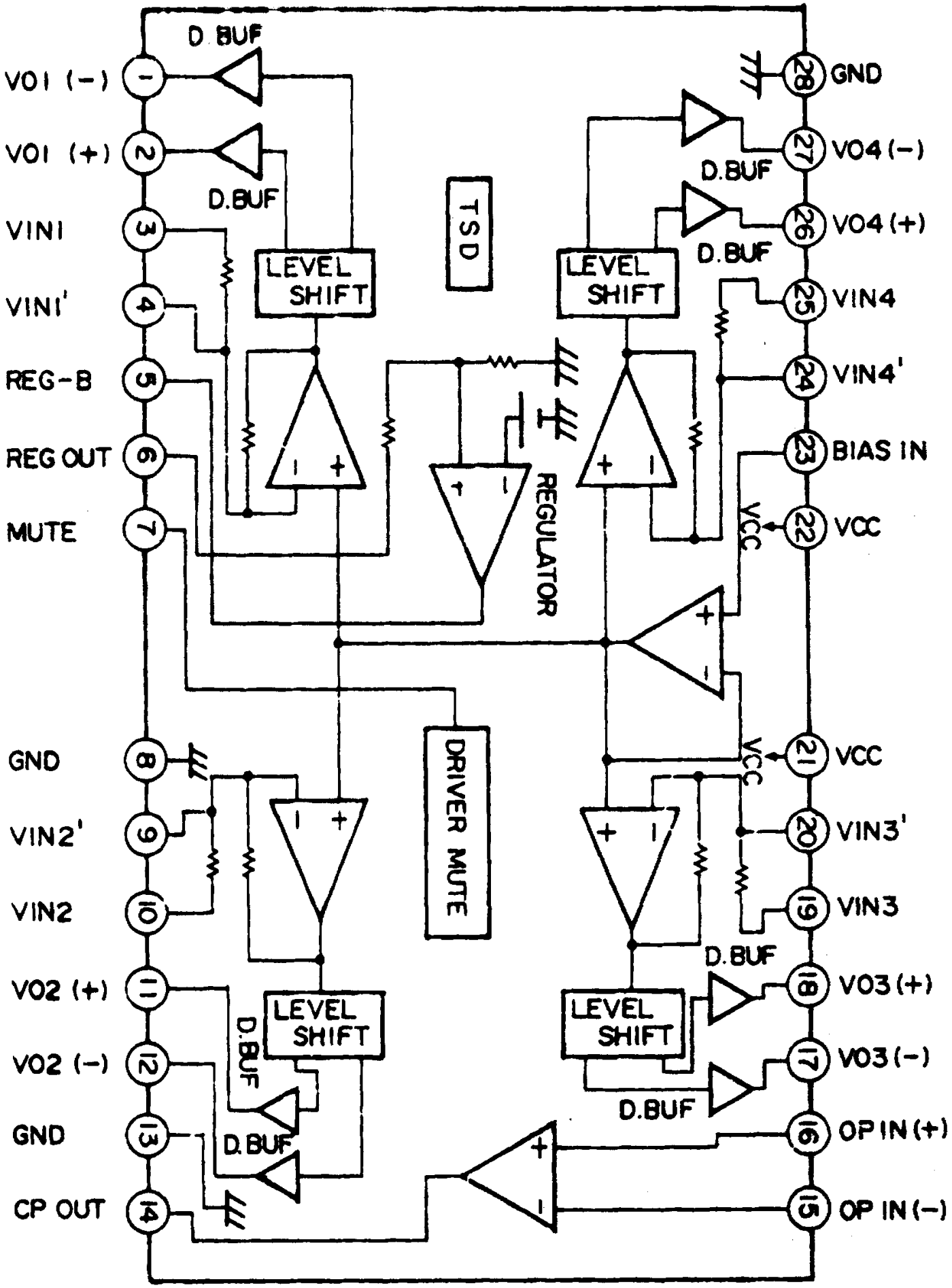
VO1 (−)
VO1 (+)
VIN1
VIN1'
REG-B
REG OUT
MUTE
GND
VIN2'
VIN2
VO2 (+)
VO2 (−)
GND
CP OUT
GND
VO4 (−)
VO4 (+)
VIN4
VIN4'
BIAS IN
VCC
VCC
VIN3'
VIN3
VO3 (+)
VO3 (−)
OP IN (+)
OP IN (−)
D. BUF
D.BUF
LEVEL SHIFT
TSD
REGULATOR
DRIVER MUTE

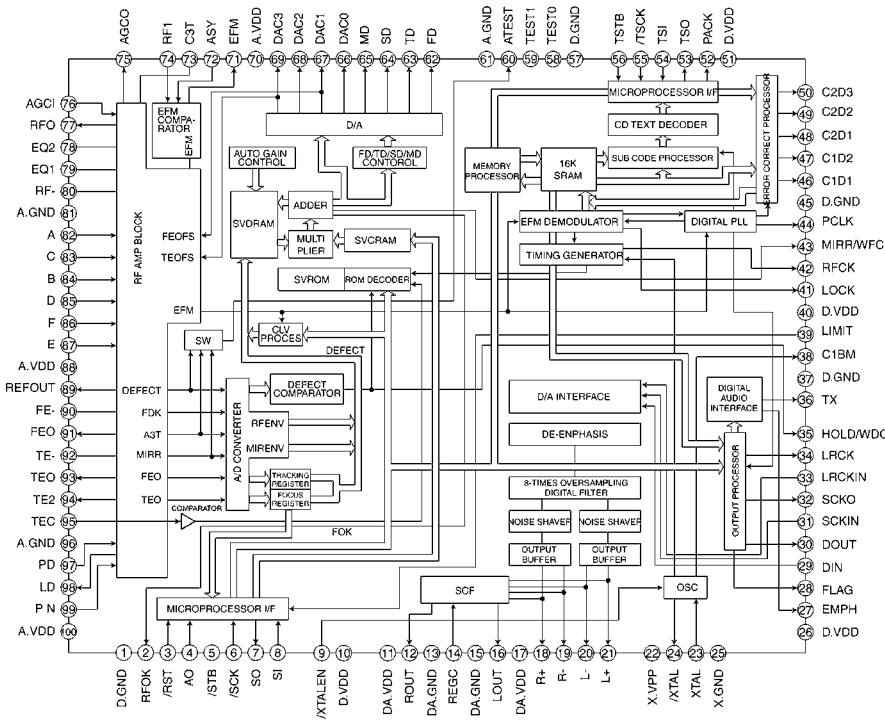
AGCO 75
RF1 74
C3T 73
ASY 72
EFM 71
A.VDD 70
DAC3 69
DAC2 68
DAC1 67
DAC0 66
MD 65
SD 64
TD 63
FD 62
A.GND 61
ATEST 60
TEST1 59
TEST0 58
D.GND 57
TSTB 56
/TSCK 55
TSI 54
TSO 53
PACK 52
D.VDD 51
AGCI 76
RFO 77
EQ2 78
EQ1 79
RF- 80
A.GND 81
A 82
C 83
B 84
D 85
F 86
E 87
A.VDD 88
REFOUT 89
FE- 90
FEO 91
TE- 92
TEO 93
TE2 94
TEC 95
A.GND 96
PD 97
LD 98
P N 99
A.VDD 100
RF AMP BLOCK
EFM COMPA-RATOR
EFM
FEOFS
TEOFS
EFM
DEFECT
FDK
A3T
MIRR
FEO
TEO
COMPARATOR
SW
A/D CONVERTER
DEFECT COMPARATOR
RFENV
MIRENV
TRACKING REGISTER
FOCUS REGISTER
FOK
D/A
AUTO GAIN CONTROL
FD/TD/SD/MD CONTOROL
SVORAM
ADDER
MULTI PLIER
SVCRAM
SVROM
ROM DECODER
CLV PROCESS
MICROPROCESSOR I/F
MEMORY PROCESSOR
16K SRAM
MICROPROCESSOR I/F
CD TEXT DECODER
SUB CODE PROCESSOR
ERROR CORRECT PROCESSOR
EFM DEMODULATOR
DIGITAL PLL
TIMING GENERATOR
D/A INTERFACE
DE-ENPHASIS
DIGITAL AUDIO INTERFACE
OUTPUT PROCESSOR
8-TIMES OVERSAMPLING DIGITAL FILTER
NOISE SHAVER
NOISE SHAVER
OUTPUT BUFFER
OUTPUT BUFFER
SCF
OSC
MICROPROCESSOR I/F
C2D3 50
C2D2 49
C2D1 48
C1D2 47
C1D1 46
D.GND 45
PCLK 44
MIRR/WFCK 43
RFCK 42
LOCK 41
D.VDD 40
LIMIT 39
C1BM 38
D.GND 37
TX 36
HOLD/WDCK 35
LRCK 34
LRCKIN 33
SCKO 32
SCKIN 31
DOUT 30
DIN 29
FLAG 28
EMPH 27
D.VDD 26
D.GND 1
RFOK 2
/RST 3
AO 4
/STB 5
/SCK 6
SO 7
SI 8
/XTALEN 9
D.VDD 10
DA.VDD 11
ROUT 12
DA.GND 13
REGC 14
DA.GND 15
LOUT 16
DA.VDD 17
R+ 18
R- 19
L- 20
L+ 21
X.VPP 22
/XTAL 24
XTAL 23
X.GND 25

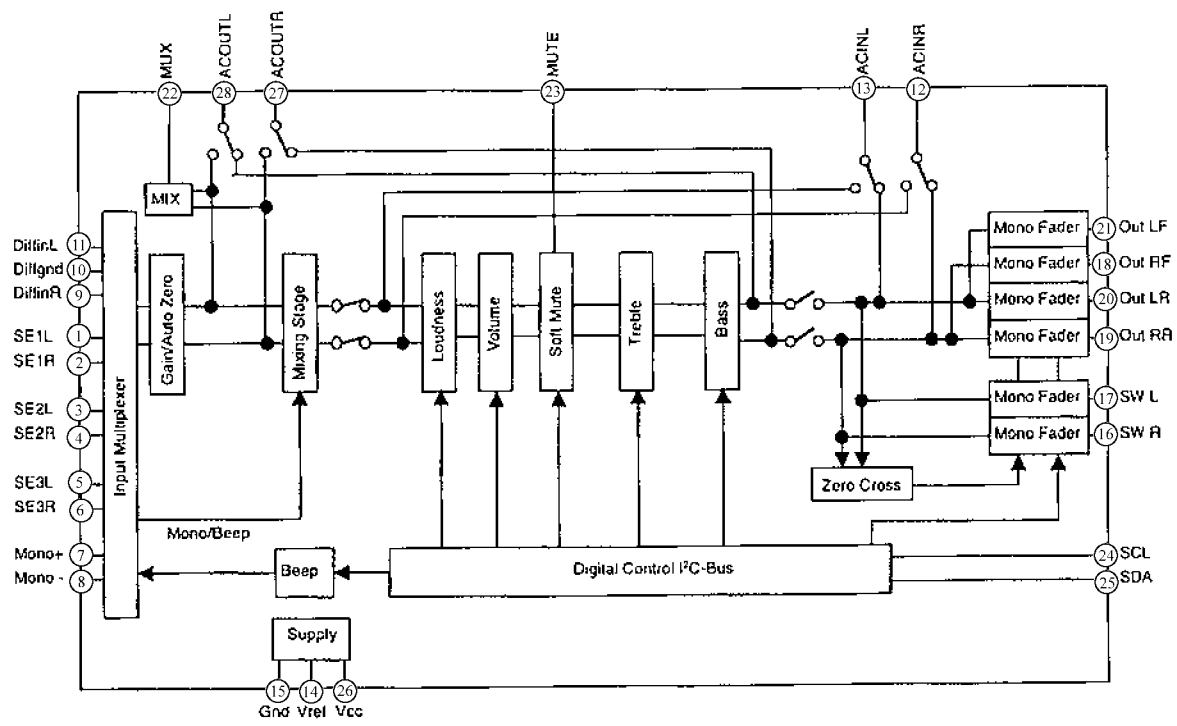
MUX
ACOUTL
ACOUTR
MUTE
ACINL
ACINR
22
28
27
23
13
12
MIX
DiffinL 11
Diffgnd 10
DiffinR 9
SE1L 1
SE1R 2
SE2L 3
SE2R 4
SE3L 5
SE3R 6
Mono+ 7
Mono - 8
Input Multiplexer
Gain/Auto Zero
Mixing Stage
Loudness
Volume
Soft Mute
Treble
Bass
Mono Fader
Mono Fader
Mono Fader
Mono Fader
Mono Fader
Mono Fader
21 Out LF
18 Out RF
20 Out LR
19 Out RR
17 SW L
16 SW R
Zero Cross
Mono/Beep
Beep
Digital Control I²C-Bus
24 SCL
25 SDA
Supply
15 Gnd
14 Vref
26 Vcc

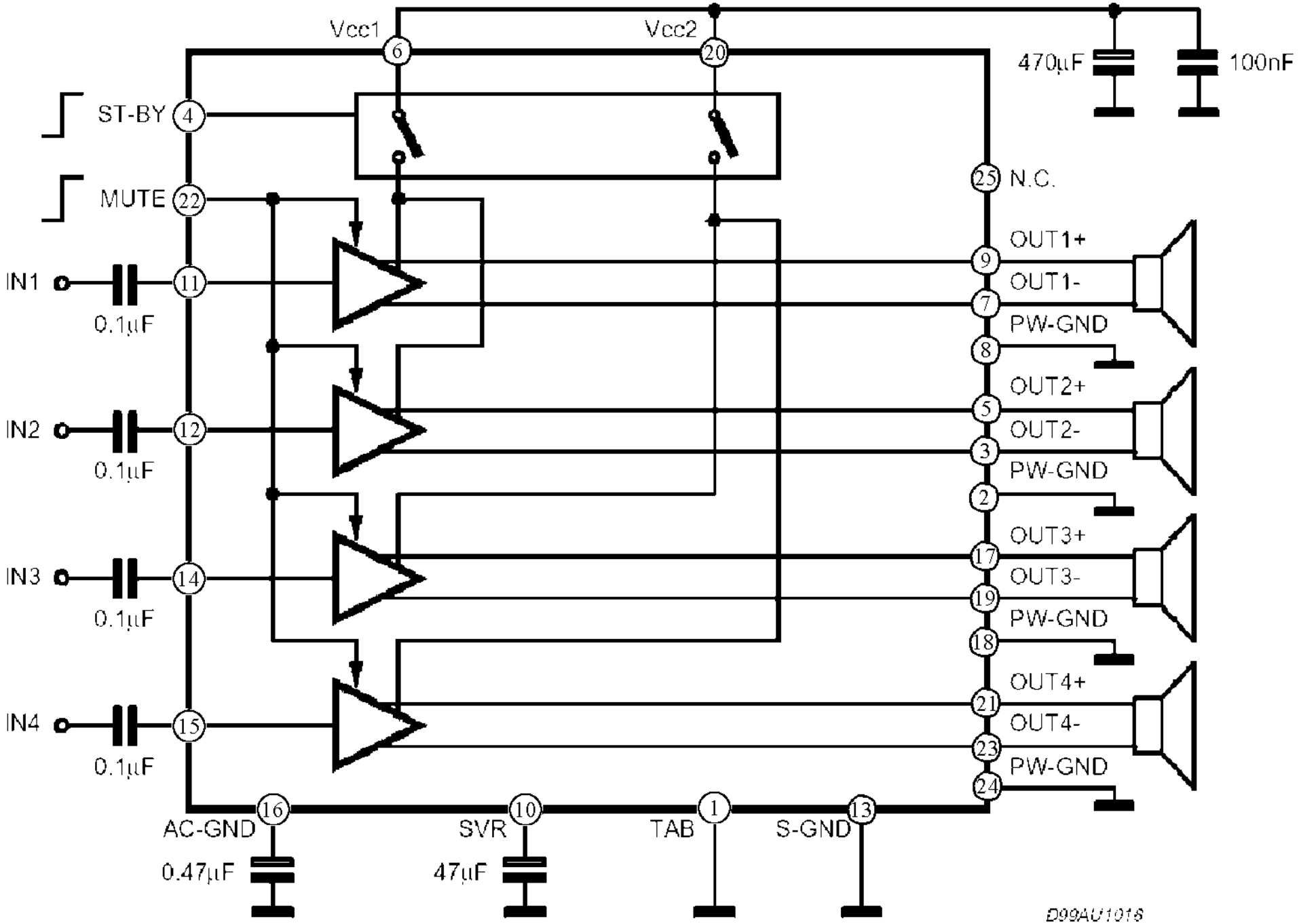
Vcc1
6
Vcc2
20
470µF
100nF
ST-BY
4
MUTE
22
25
N.C.
IN1
11
0.1µF
OUT1+
9
OUT1-
7
PW-GND
8
IN2
12
0.1µF
OUT2+
5
OUT2-
3
PW-GND
2
IN3
14
0.1µF
OUT3+
17
OUT3-
19
PW-GND
18
IN4
15
0.1µF
OUT4+
21
OUT4-
23
PW-GND
24
16
AC-GND
0.47µF
10
SVR
47µF
1
TAB
13
S-GND
D99AU1016

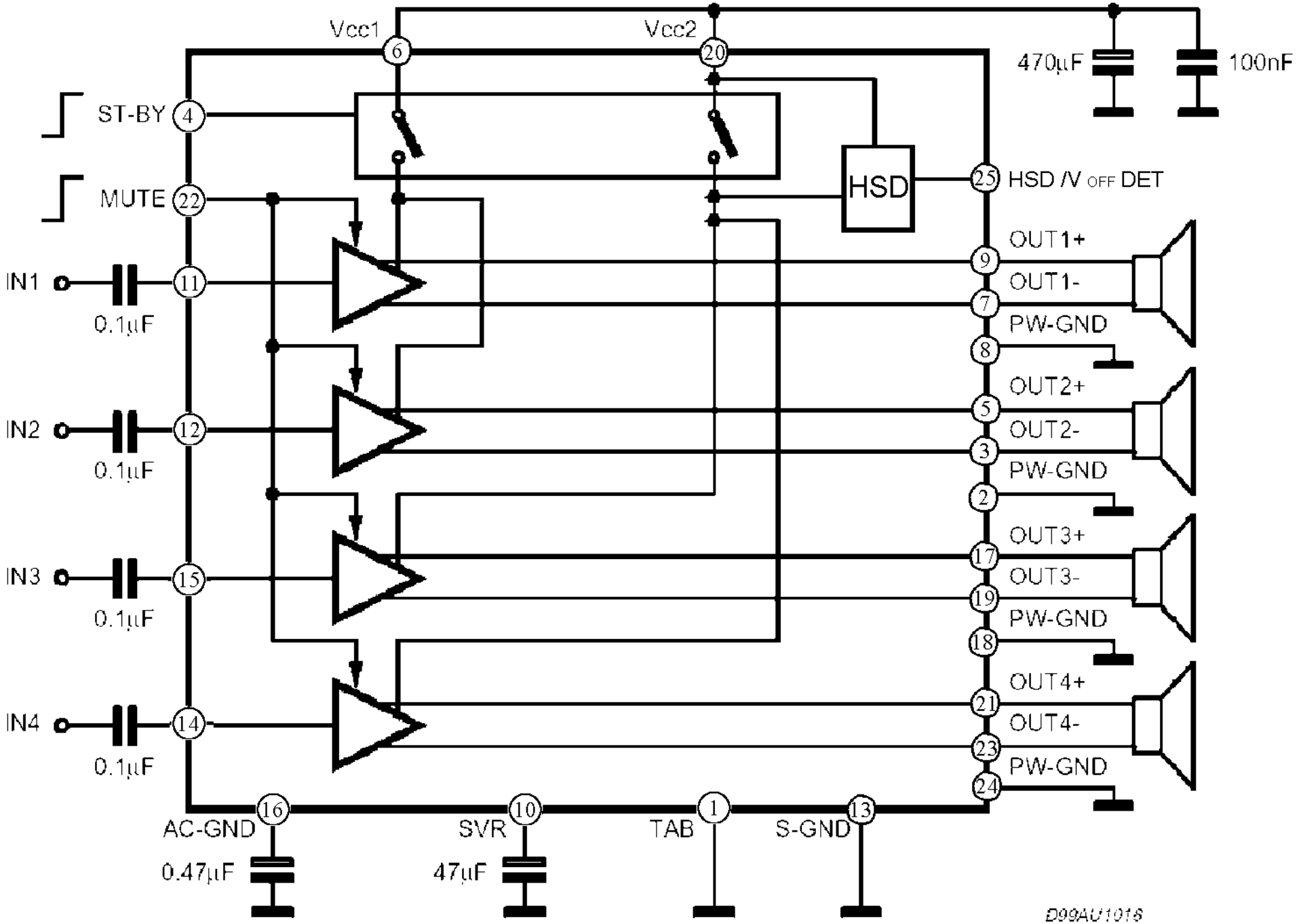
Vcc1
6
Vcc2
20
470µF
100nF
ST-BY
4
MUTE
22
HSD
25
HSD /V OFF DET
IN1
11
0.1µF
IN2
12
0.1µF
IN3
15
0.1µF
IN4
14
0.1µF
OUT1+
9
OUT1-
7
PW-GND
8
OUT2+
5
OUT2-
3
PW-GND
2
OUT3+
17
OUT3-
19
PW-GND
18
OUT4+
21
OUT4-
23
PW-GND
24
AC-GND
16
0.47µF
SVR
10
47µF
TAB
1
S-GND
13
D99AU1016

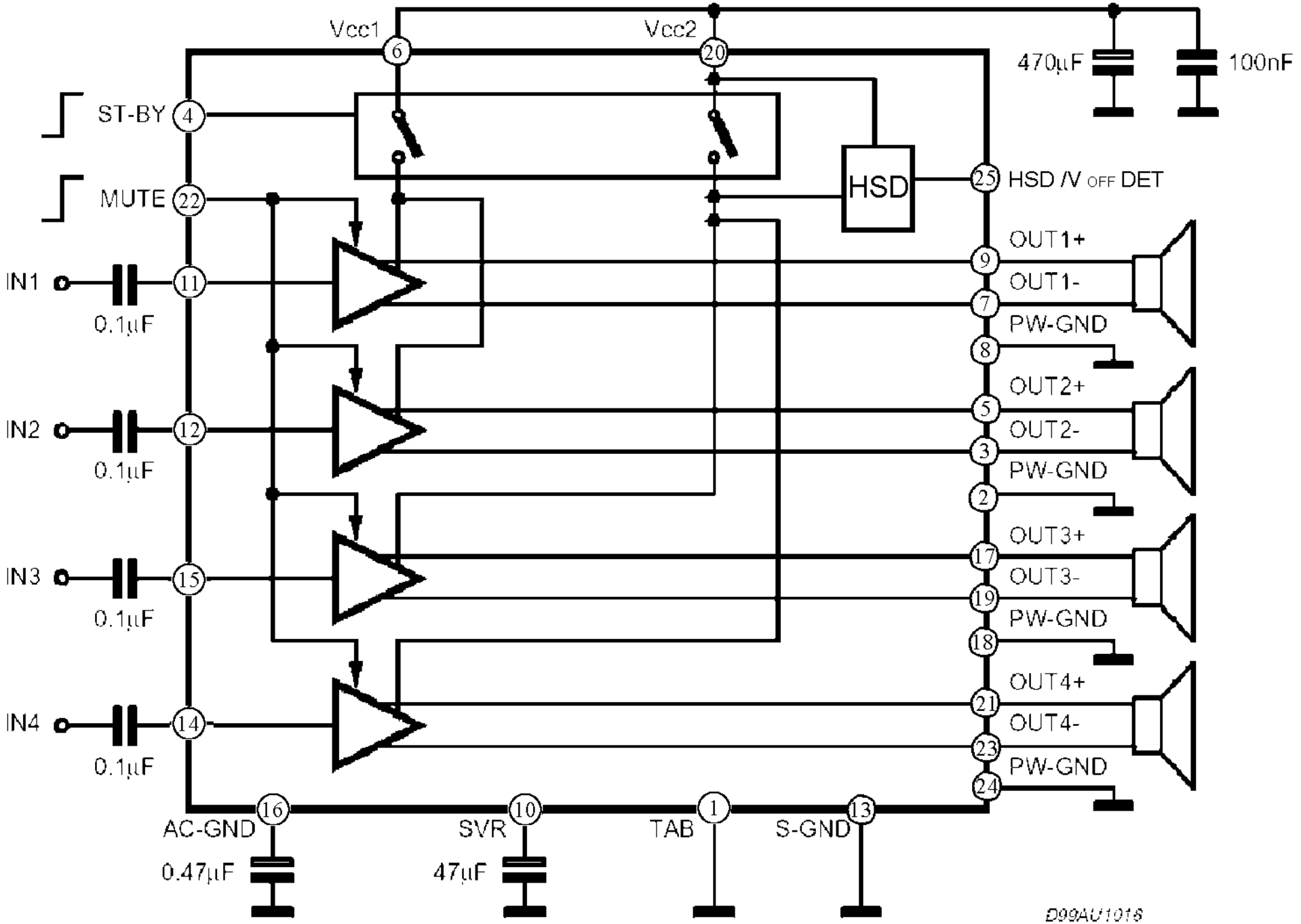
Vcc1
6
Vcc2
20
470µF
100nF
ST-BY
4
MUTE
22
HSD
25
HSD /V OFF DET
IN1
11
0.1µF
IN2
12
0.1µF
IN3
15
0.1µF
IN4
14
0.1µF
OUT1+
9
OUT1-
7
PW-GND
8
OUT2+
5
OUT2-
3
PW-GND
2
OUT3+
17
OUT3-
19
PW-GND
18
OUT4+
21
OUT4-
23
PW-GND
24
AC-GND
16
0.47µF
SVR
10
47µF
TAB
1
S-GND
13
D99AU1016

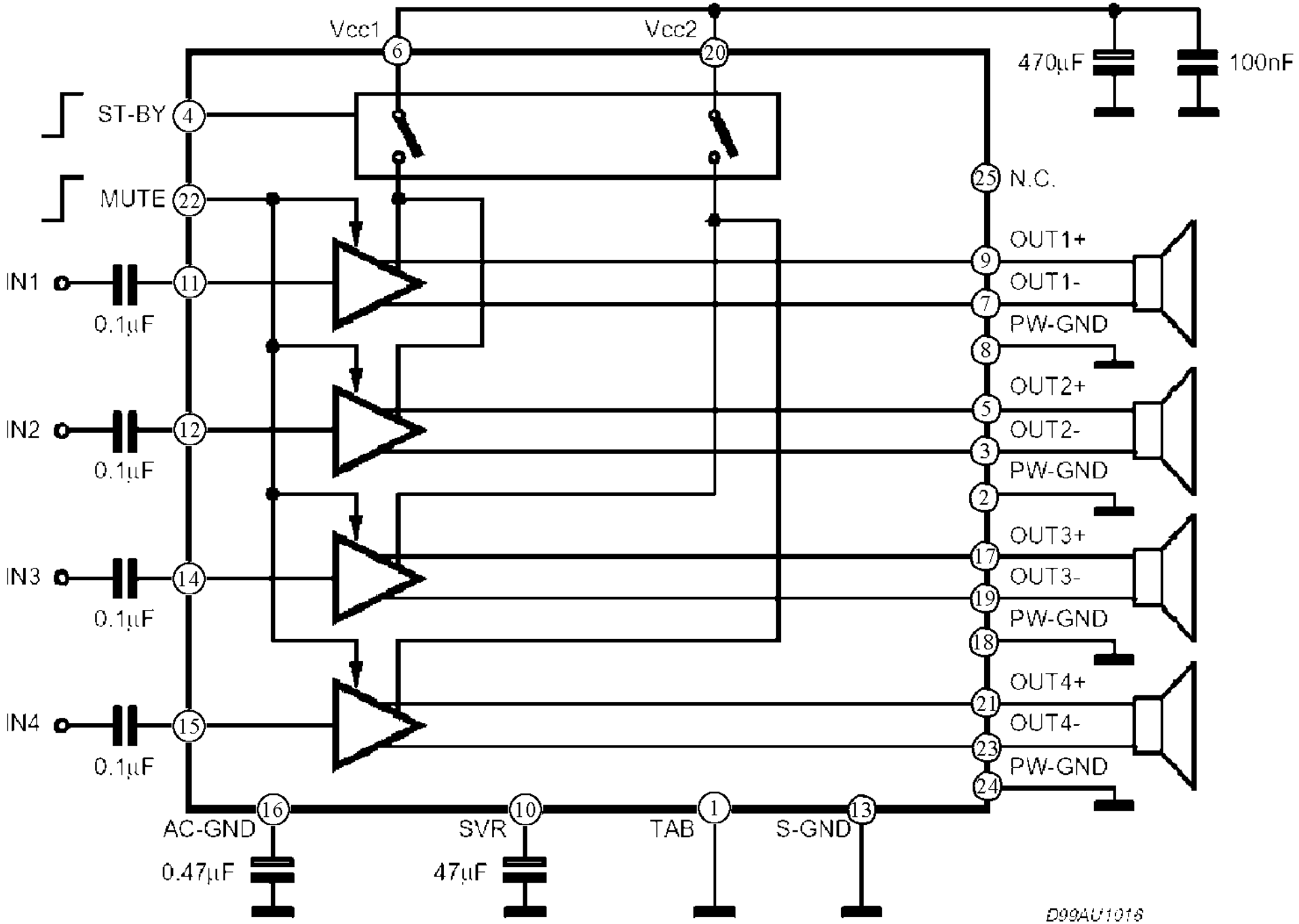
Vcc1
6
Vcc2
20
470µF
100nF
ST-BY
4
MUTE
22
25
N.C.
IN1
11
0.1µF
OUT1+
9
OUT1-
7
PW-GND
8
IN2
12
0.1µF
OUT2+
5
OUT2-
3
PW-GND
2
IN3
14
0.1µF
OUT3+
17
OUT3-
19
PW-GND
18
IN4
15
0.1µF
OUT4+
21
OUT4-
23
PW-GND
24
16
AC-GND
0.47µF
10
SVR
47µF
1
TAB
13
S-GND
D99AU1016

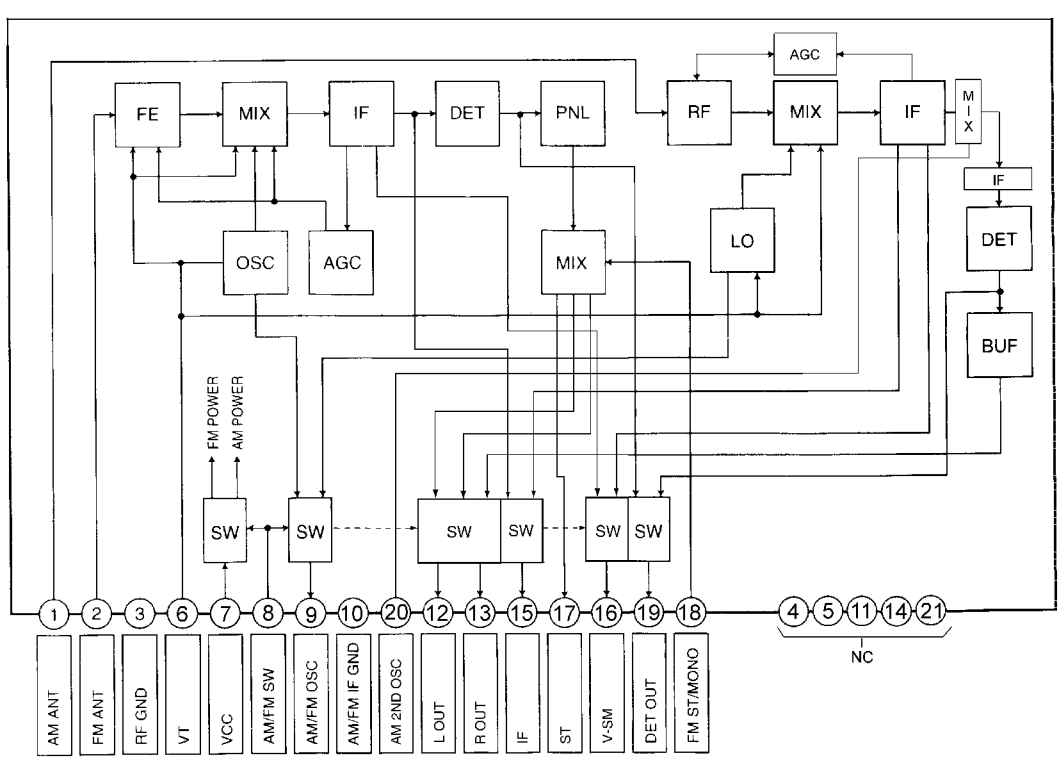
AGC
FE
MIX
IF
DET
PNL
RF
MIX
IF
MIX
IF
DET
BUF
LO
OSC
AGC
MIX
FM POWER
AM POWER
SW
SW
SW
SW
SW
SW
1
2
3
6
7
8
9
10
20
12
13
15
17
16
19
18
4
5
11
14
21
NC
AM ANT
FM ANT
RF GND
VT
VCC
AM/FM SW
AM/FM OSC
AM/FM IF GND
AM 2ND OSC
L OUT
R OUT
IF
ST
V-SM
DET OUT
FM ST/MONO

MODEL TN-708P-166

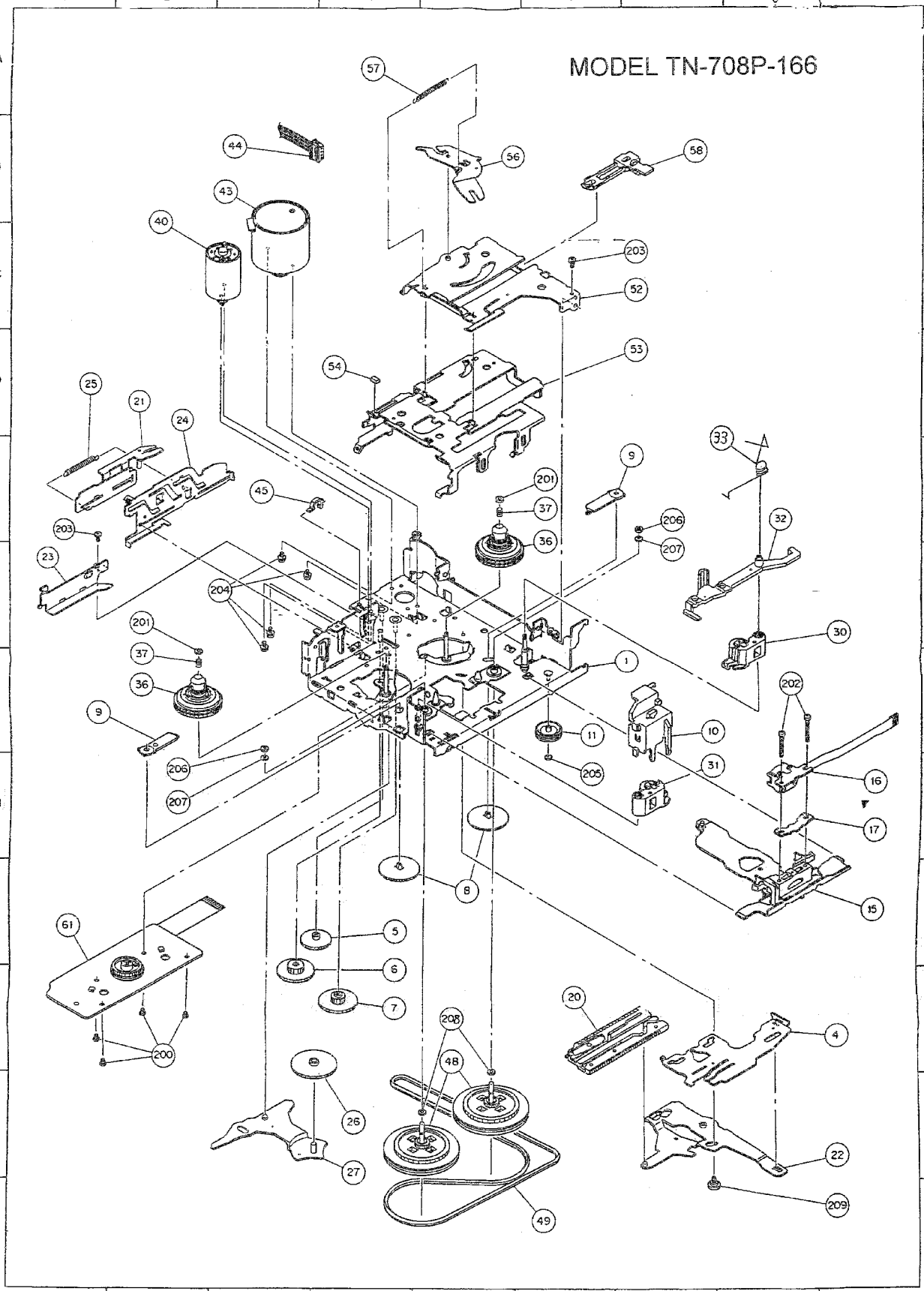

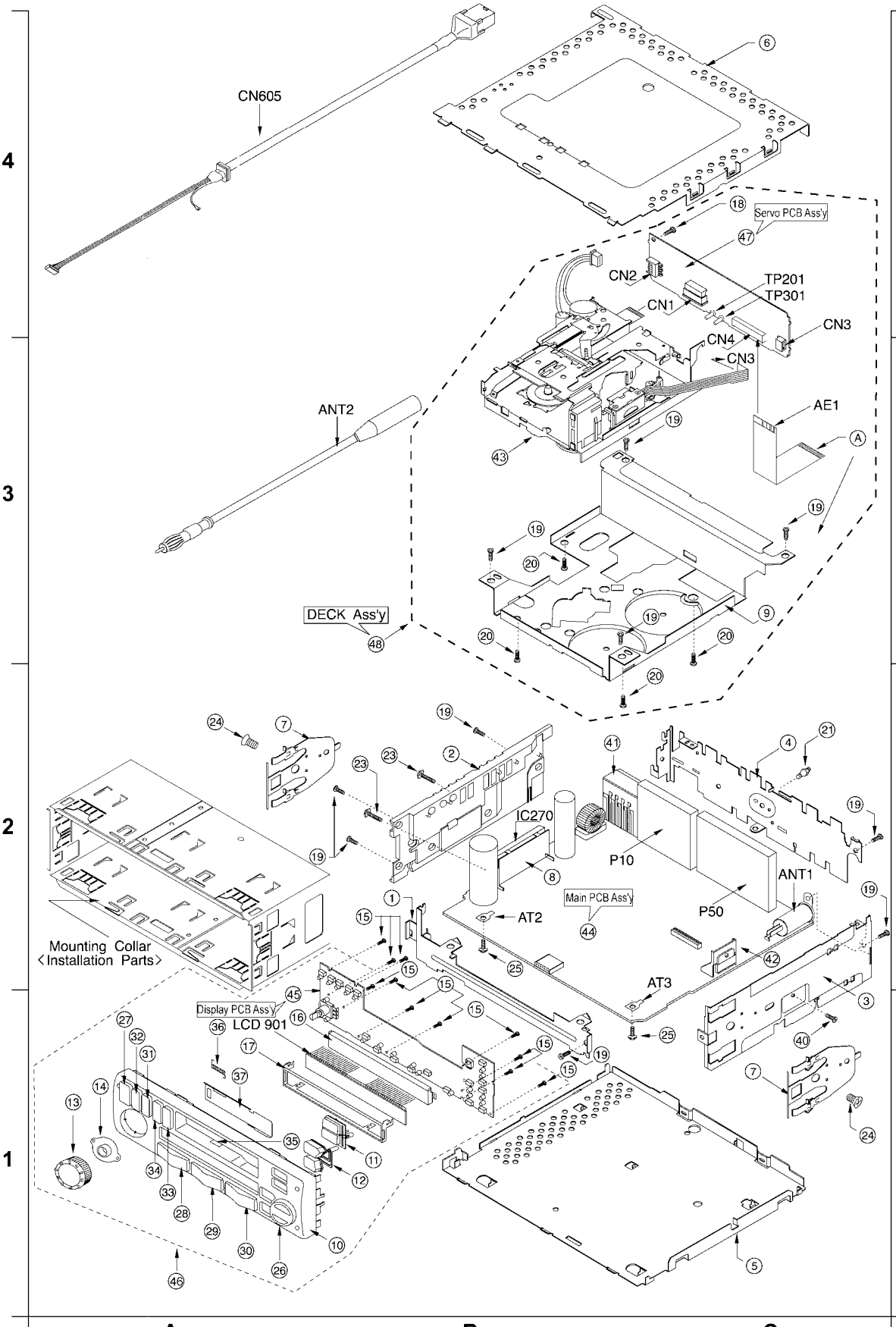
CN605
6
Servo PCB Ass'y
18
47
CN2
TP201
TP301
CN1
CN3
CN4
CN3
AE1
A
ANT2
19
43
20
9
DECK Ass'y
48
24
7
23
2
41
4
21
IC270
P10
8
ANT1
Main PCB Ass'y
44
AT2
P50
1
15
25
42
Mounting Collar
〈Installation Parts〉
AT3
3
45
Display PCB Ass'y
LCD 901
16
36
17
27
32
31
37
40
14
13
35
11
12
34
33
28
29
30
26
10
46
5
A
B
C

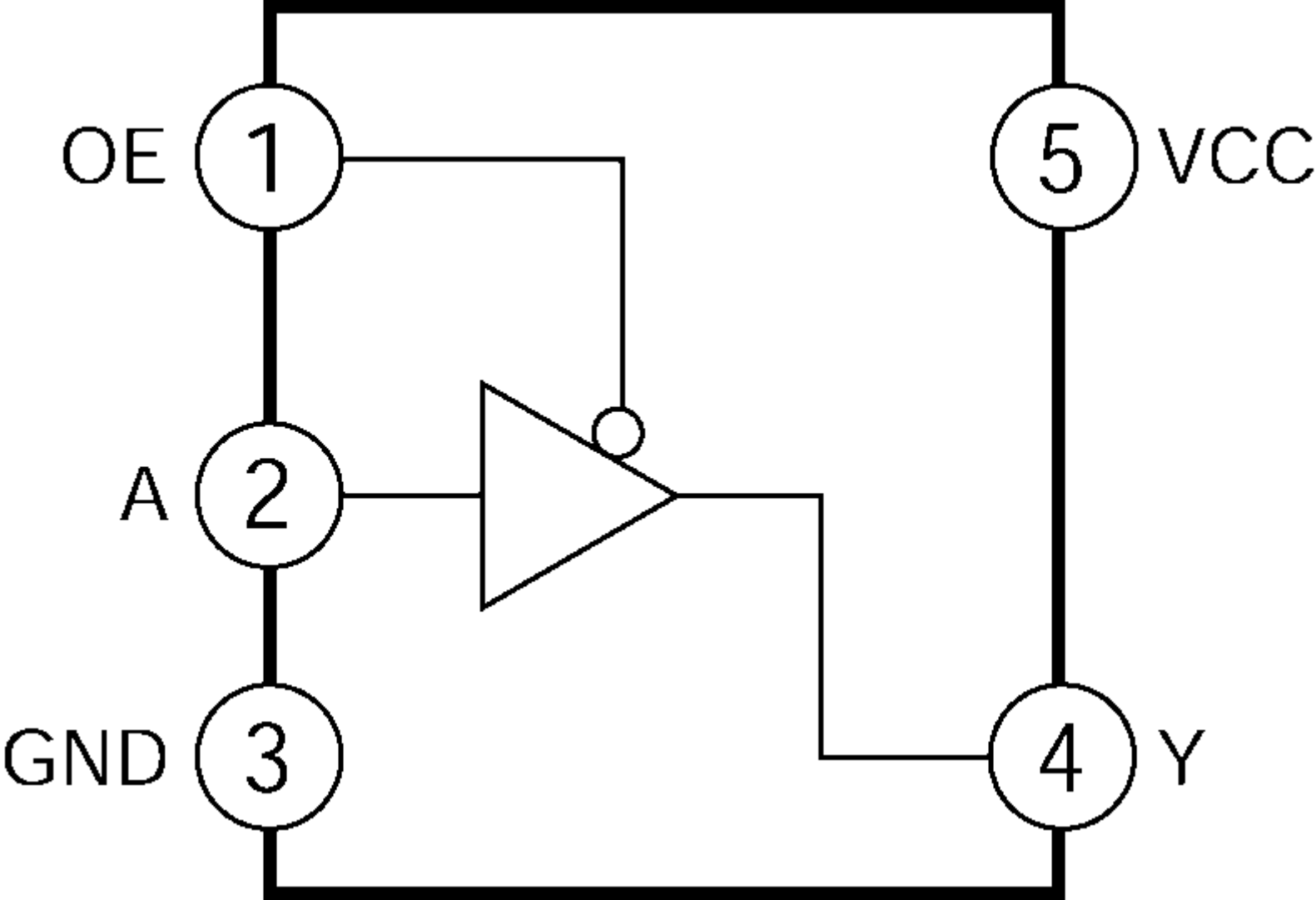
OE
1
5
VCC
A
2
GND
3
4
Y

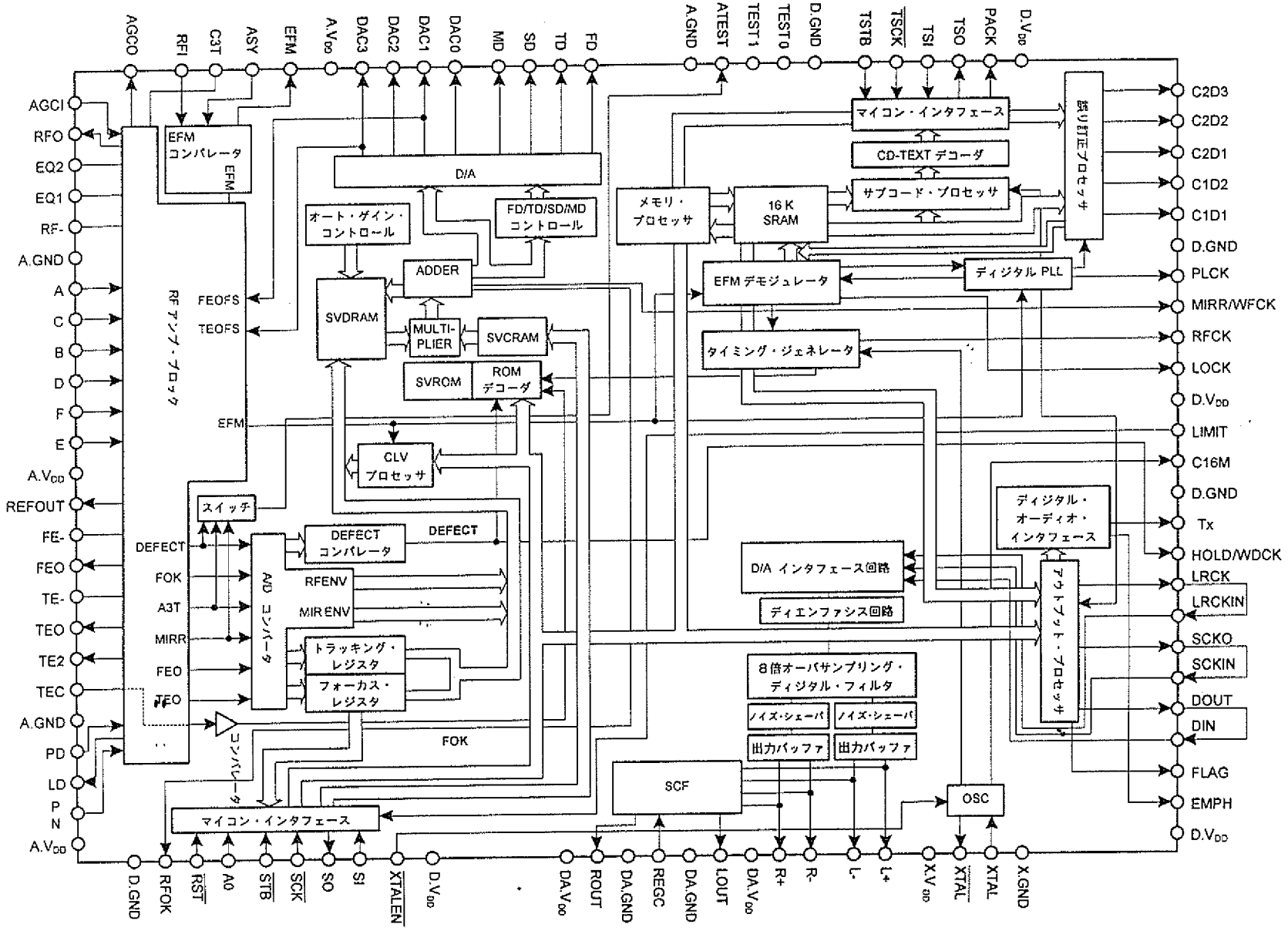
AGCO
RFI
C3T
ASY
EFM
A.VDD
DAC3
DAC2
DAC1
DAC0
MD
SD
TD
FD
A.GND
ATEST
TEST1
TEST0
D.GND
TSTB
TSCK
TSI
TSO
PACK
D.VDD
AGCI
RFO
EQ2
EQ1
RF-
A.GND
A
C
B
D
F
E
A.VDD
REFOUT
FE-
FEO
TE-
TEO
TE2
TEC
A.GND
PD
LD
P
N
A.VDD
RF アンプ・ブロック
FEOFS
TEOFS
EFM
EFM コンパレータ
EFM
D/A
オート・ゲイン・コントロール
FD/TD/SD/MD コントロール
ADDER
SVDRAM
MULTI-PLIER
SVCRAM
SVROM
ROM デコーダ
CLV プロセッサ
スイッチ
DEFECT
FOK
A3T
MIRR
FEO
TEO
A/D コンバータ
DEFECT コンパレータ
DEFECT
RFENV
MIR ENV
トラッキング・レジスタ
フォーカス・レジスタ
コンパレータ
FOK
マイコン・インタフェース
メモリ・プロセッサ
16 K SRAM
マイコン・インタフェース
CD-TEXT デコーダ
サブコード・プロセッサ
誤り訂正プロセッサ
EFM デモジュレータ
ディジタル PLL
タイミング・ジェネレータ
ディジタル・オーディオ・インタフェース
D/A インタフェース回路
ディエンファシス回路
アウトプット・プロセッサ
8倍オーバサンプリング・ディジタル・フィルタ
ノイズ・シェーパ
ノイズ・シェーパ
出力バッファ
出力バッファ
SCF
OSC
C2D3
C2D2
C2D1
C1D2
C1D1
D.GND
PLCK
MIRR/WFCK
RFCK
LOCK
D.VDD
LIMIT
C16M
D.GND
Tx
HOLD/WDCK
LRCK
LRCKIN
SCKO
SCKIN
DOUT
DIN
FLAG
EMPH
D.VDD
D.GND
RFOK
RST
A0
STB
SCK
SO
SI
XTALEN
D.VDD
DA.VDD
ROUT
DA.GND
REGC
DA.GND
LOUT
DA.VDD
R+
R-
L-
L+
X.VDD
XTAL
XTAL
X.GND

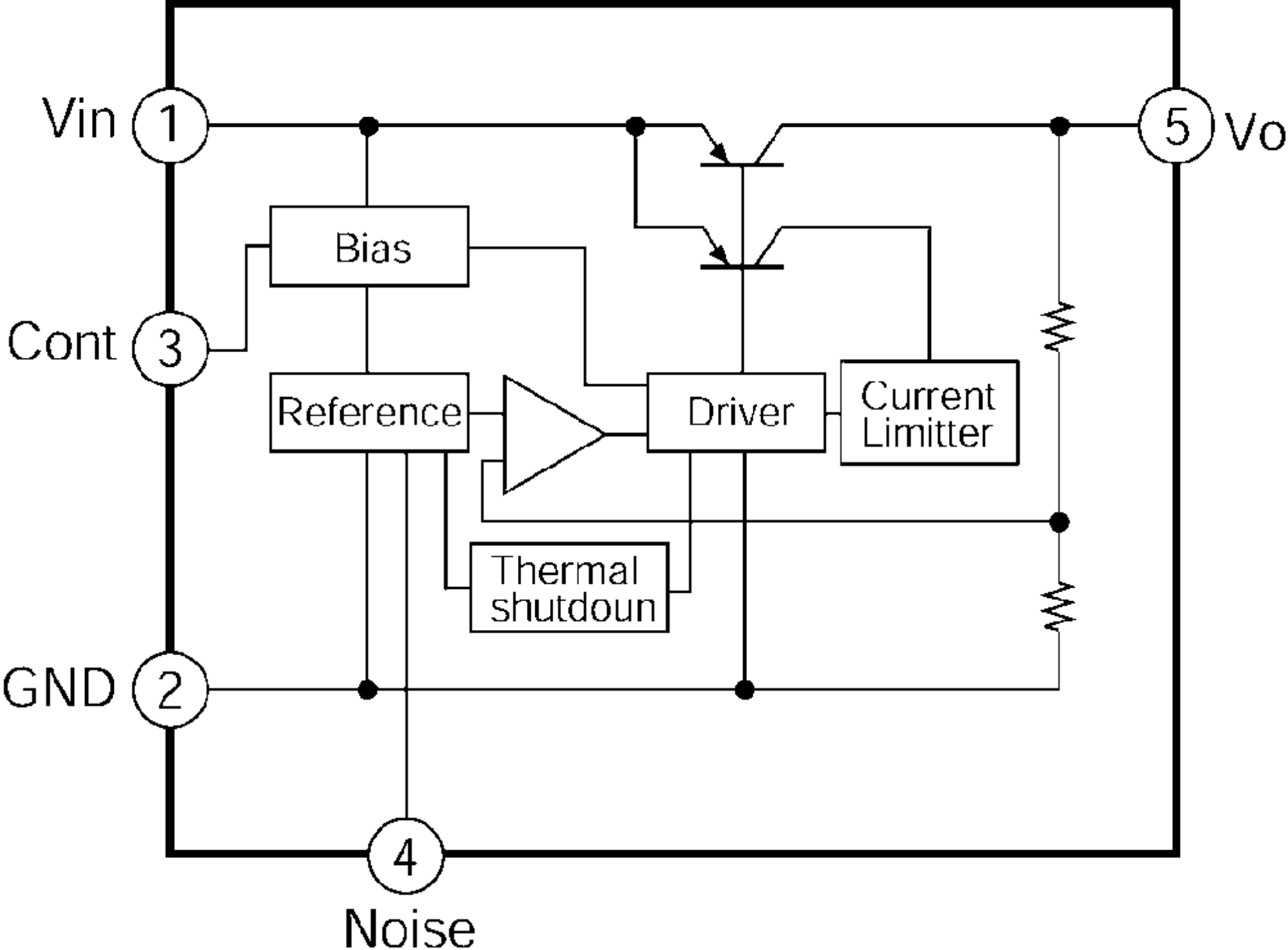
Vin
1
Cont
3
GND
2
4
Noise
5
Vo
Bias
Reference
Driver
Current
Limitter
Thermal
shutdoun

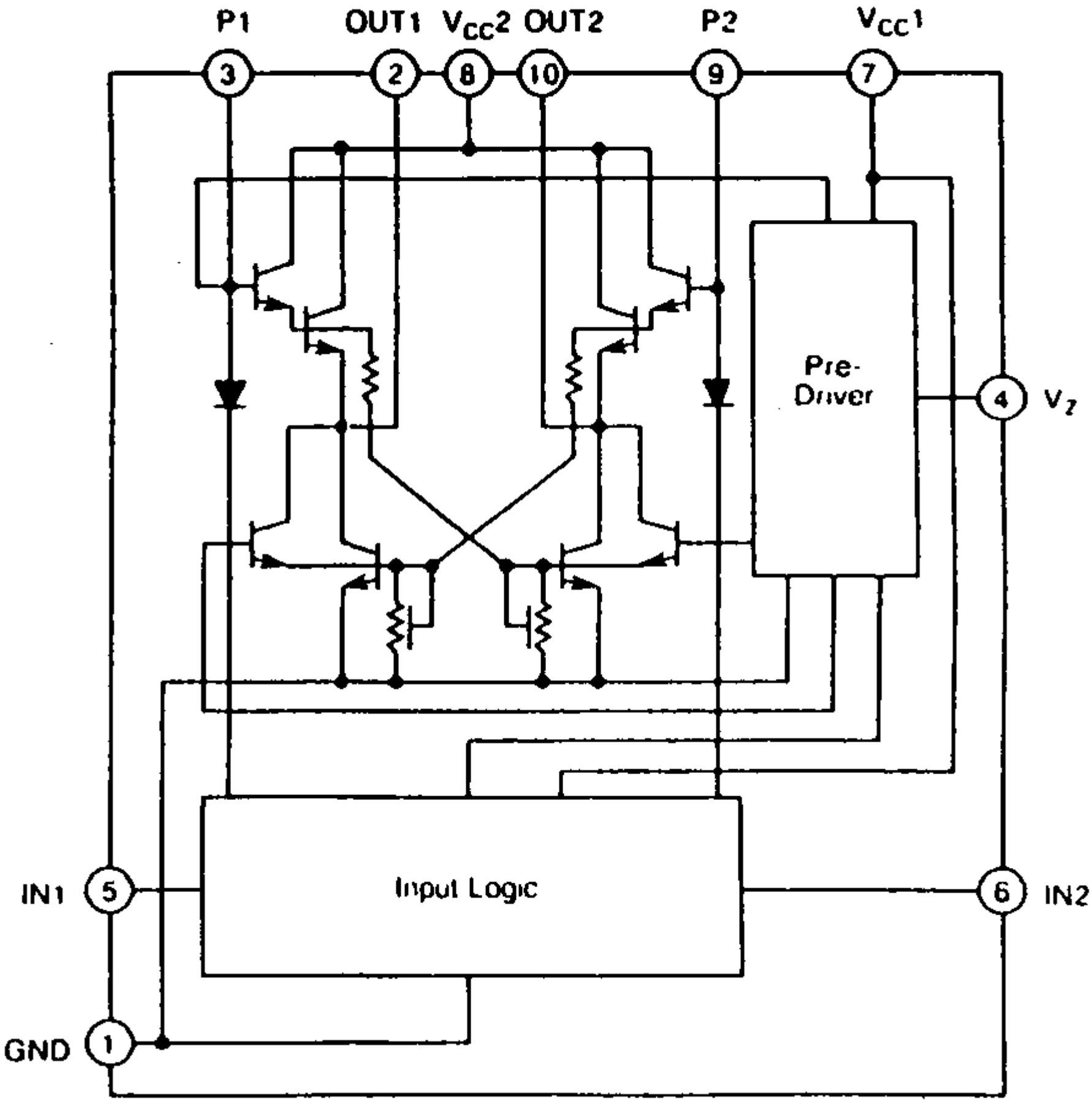
P1
OUT1
$V_{CC}2$
OUT2
P2
$V_{CC}1$
3
2
8
10
9
7
Pre-
Driver
4
V_Z
IN1
5
Input Logic
6
IN2
GND
1

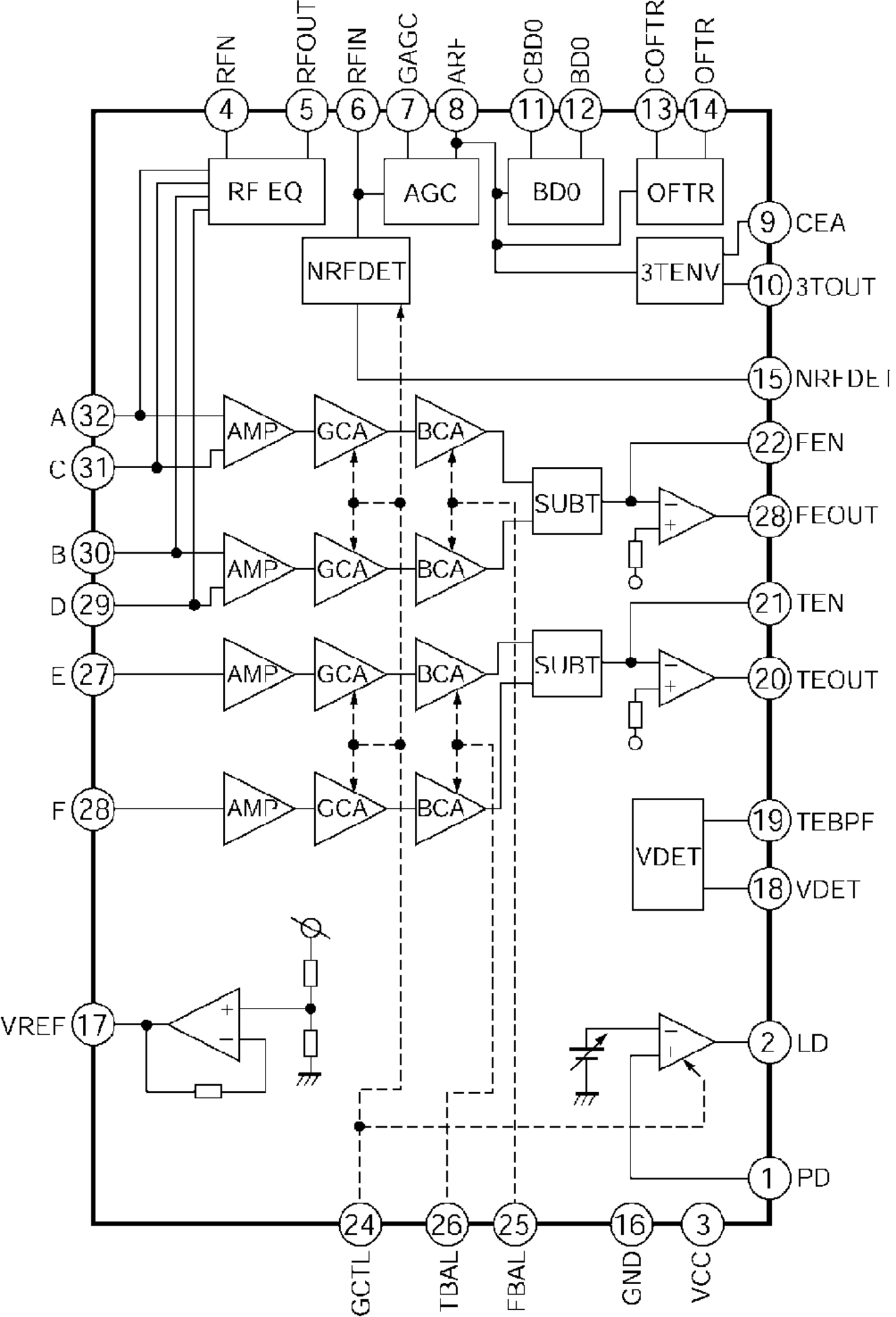
RFN
RFOUT
RFIN
GAGC
ARF
CBD0
BD0
COFTR
OFTR
4
5
6
7
8
11
12
13
14
RF EQ
AGC
BD0
OFTR
NRFDET
3TENV
9 CEA
10 3TOUT
15 NRFDET
A 32
C 31
B 30
D 29
E 27
F 28
AMP
GCA
BCA
SUBT
22 FEN
28 FEOUT
21 TEN
20 TEOUT
19 TEBPF
18 VDET
VDET
VREF 17
2 LD
1 PD
24
26
25
16
3
GCTL
TBAL
FBAL
GND
VCC

YEAMPT2313L

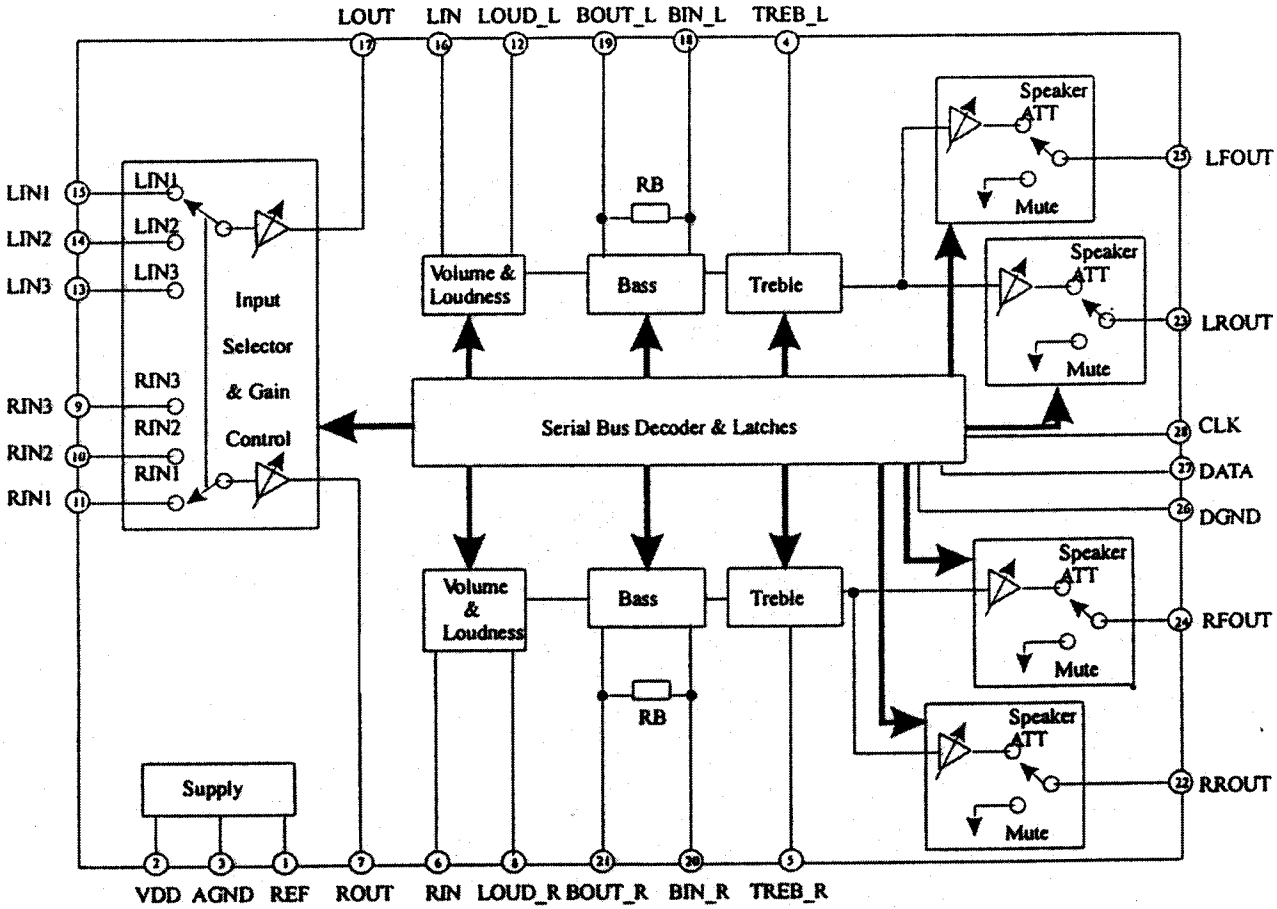

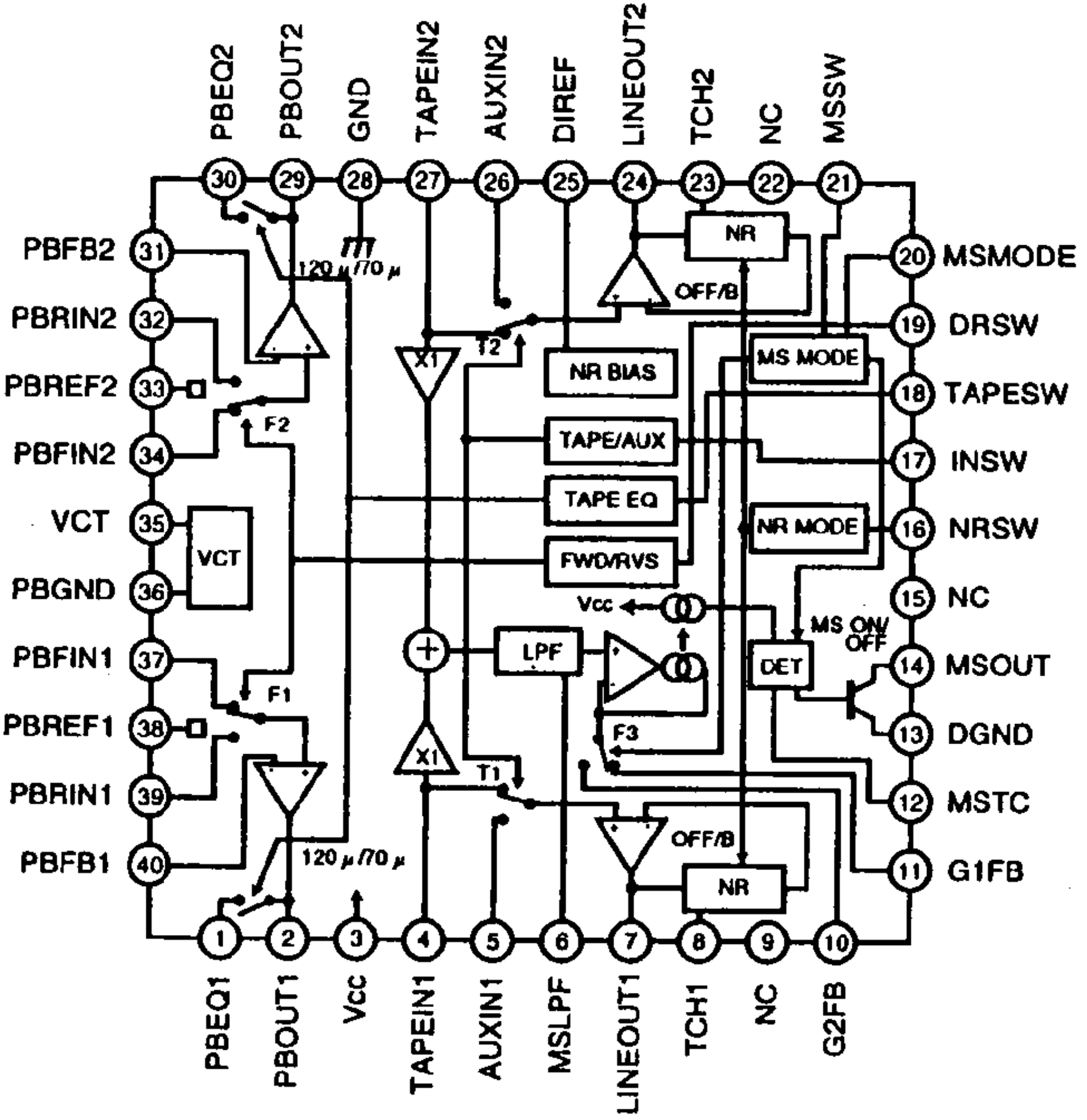
PBEQ2
PBOUT2
GND
TAPEIN2
AUXIN2
DIREF
LINEOUT2
TCH2
NC
MSSW
PBFB2
PBRIN2
PBREF2
PBFIN2
VCT
PBGND
PBFIN1
PBREF1
PBRIN1
PBFB1
MSMODE
DRSW
TAPESW
INSW
NRSW
NC
MSOUT
DGND
MSTC
G1FB
PBEQ1
PBOUT1
Vcc
TAPEIN1
AUXIN1
MSLPF
LINEOUT1
TCH1
NC
G2FB
NR
OFF/B
NR BIAS
MS MODE
TAPE/AUX
TAPE EQ
NR MODE
FWD/RVS
VCT
LPF
DET
MS ON/OFF
X1
T2
T1
F1
F2
F3
120 μ/70 μ

IC602 YEAMTC4584FN

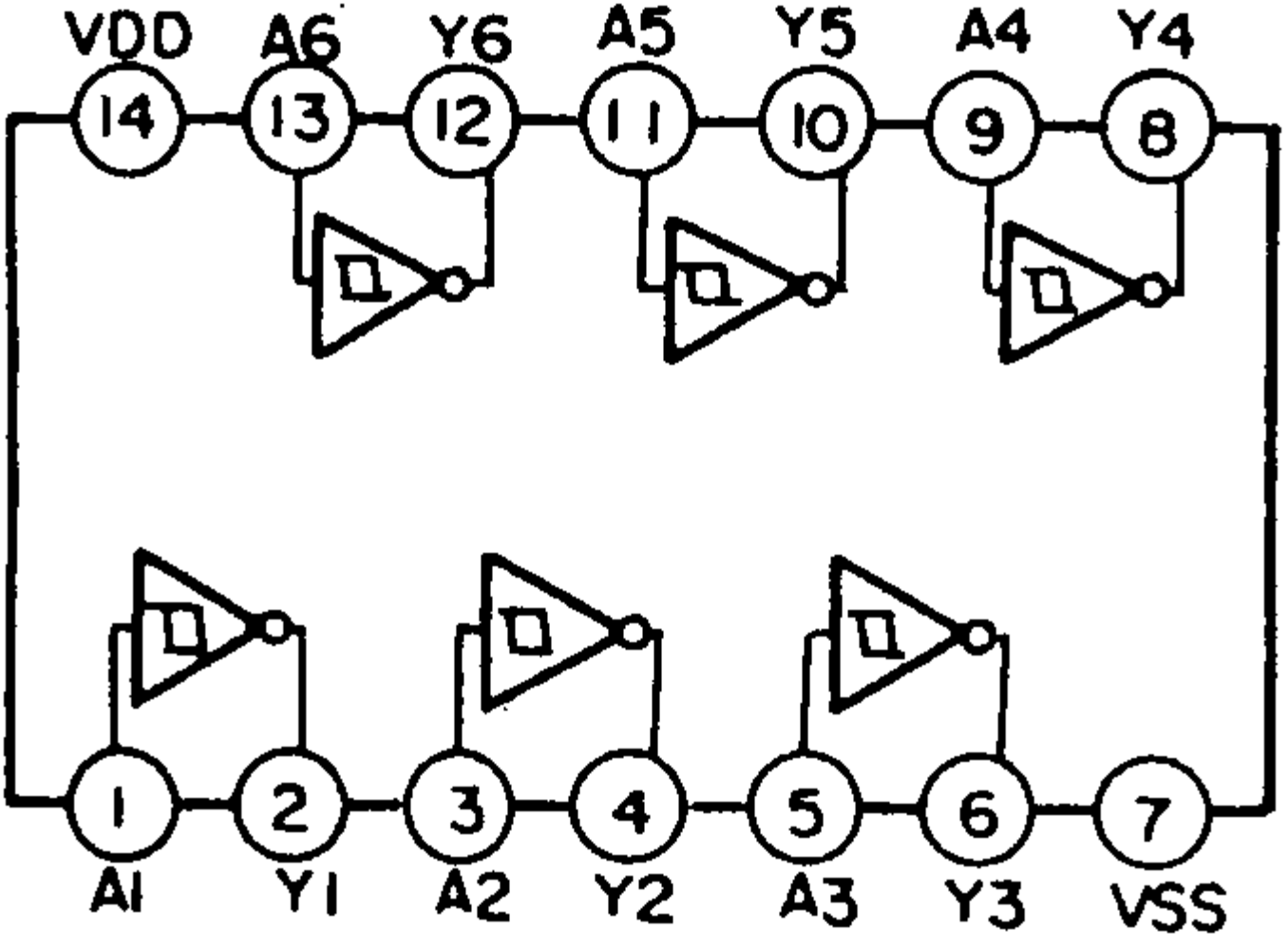

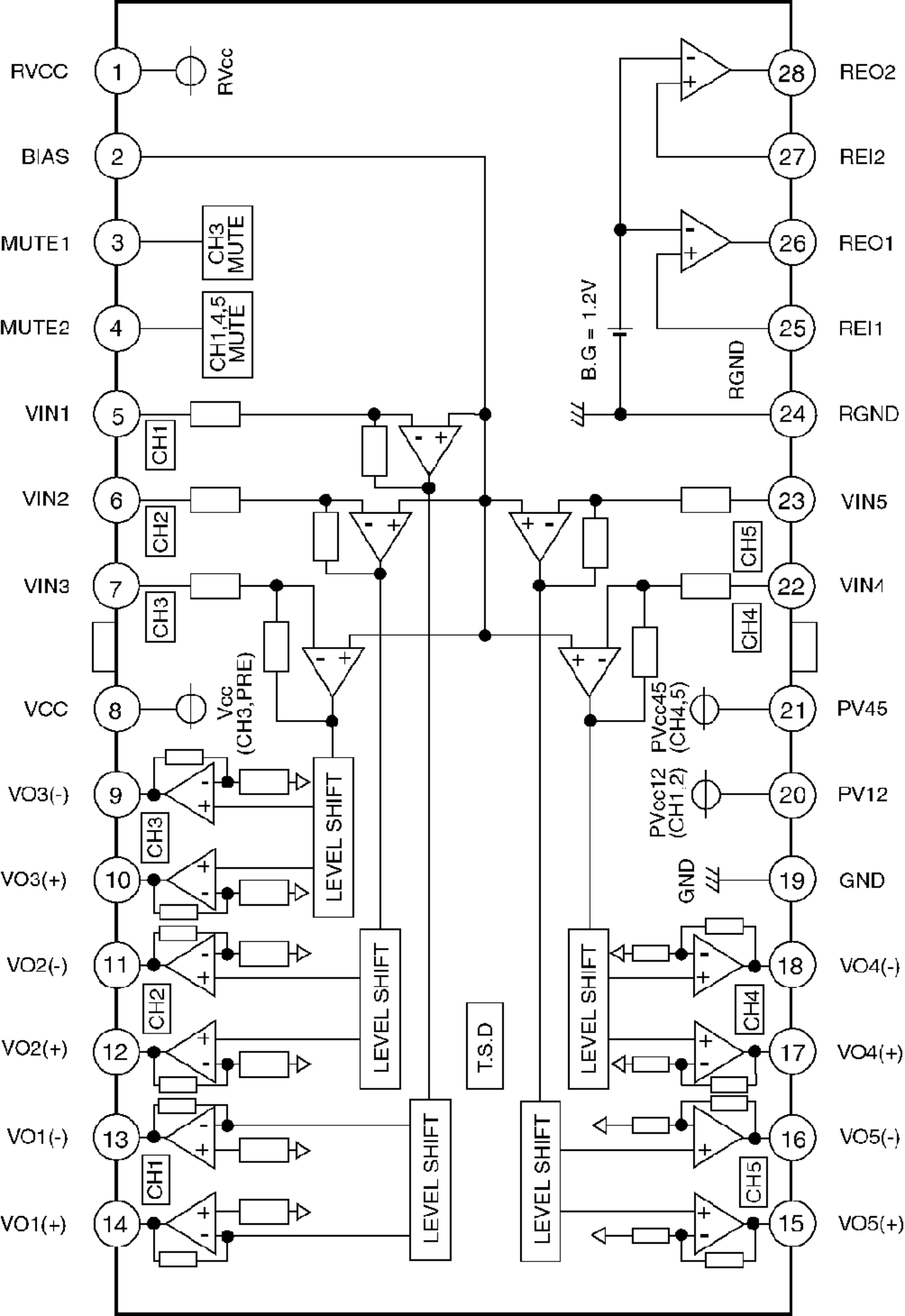
RVCC
1
RVcc
BIAS
2
MUTE1
3
CH3 MUTE
MUTE2
4
CH1,4,5 MUTE
VIN1
5
CH1
VIN2
6
CH2
VIN3
7
CH3
VCC
8
Vcc (CH3,PRE)
VO3(-)
9
CH3
VO3(+)
10
LEVEL SHIFT
VO2(-)
11
CH2
VO2(+)
12
LEVEL SHIFT
VO1(-)
13
CH1
VO1(+)
14
LEVEL SHIFT
T.S.D
LEVEL SHIFT
LEVEL SHIFT
B.G = 1.2V
RGND
28
REO2
27
REI2
26
REO1
25
REI1
24
RGND
23
VIN5
CH5
22
VIN4
CH4
21
PV45
PVcc45 (CH4,5)
20
PV12
PVcc12 (CH1,2)
GND
19
GND
18
VO4(-)
CH4
17
VO4(+)
16
VO5(-)
CH5
15
VO5(+)

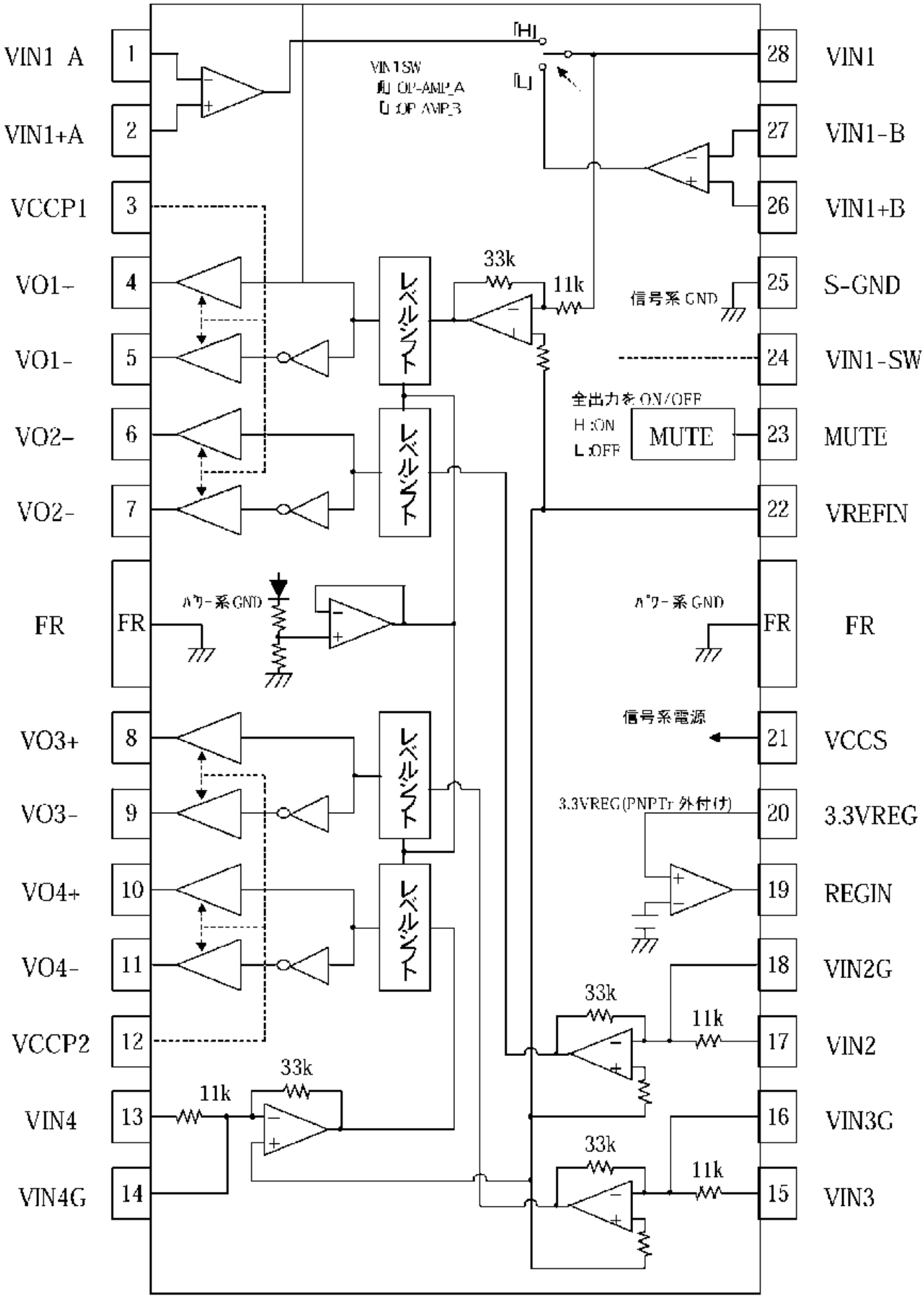
VIN1 A
VIN1+A
VCCP1
VO1-
VO1-
VO2-
VO2-
FR
VO3+
VO3-
VO4+
VO4-
VCCP2
VIN4
VIN4G
1
2
3
4
5
6
7
FR
8
9
10
11
12
13
14
VIN1SW
「H」 OP-AMP_A
「L」 OP-AMP_B
「H」
「L」
レベルシフト
レベルシフト
レベルシフト
レベルシフト
33k
11k
33k
11k
パワー系GND
信号系GND
全出力をON/OFF
H:ON
L:OFF
MUTE
パワー系GND
信号系電源
3.3VREG(PNPTr 外付け)
33k
11k
33k
11k
28
27
26
25
24
23
22
FR
21
20
19
18
17
16
15
VIN1
VIN1-B
VIN1+B
S-GND
VIN1-SW
MUTE
VREFIN
FR
VCCS
3.3VREG
REGIN
VIN2G
VIN2
VIN3G
VIN3

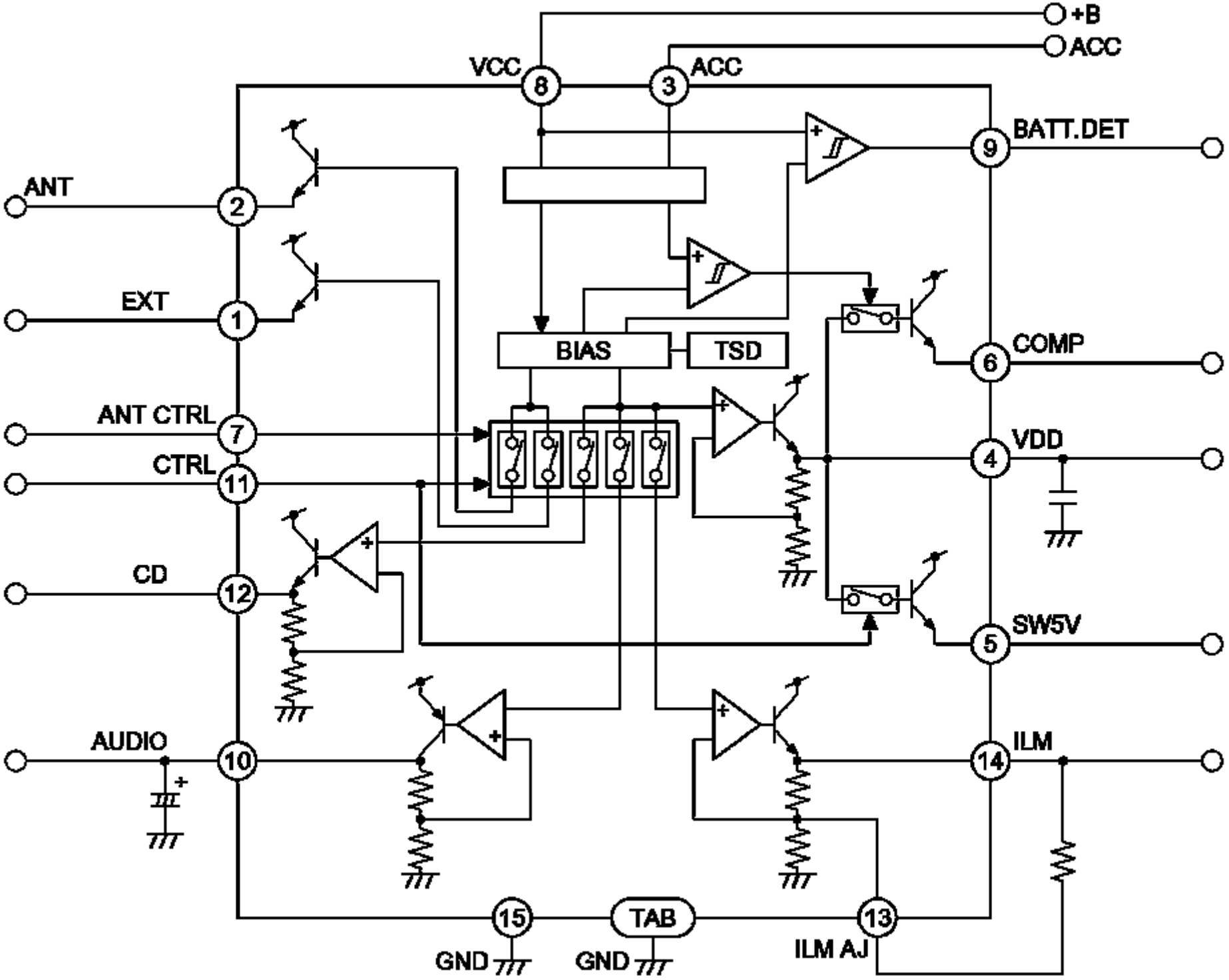
+B
ACC
VCC
8
3
ACC
BATT.DET
9
ANT
2
EXT
1
BIAS
TSD
COMP
6
ANT CTRL
7
CTRL
11
VDD
4
CD
12
SW5V
5
AUDIO
10
ILM
14
15
TAB
13
GND
GND
ILM AJ

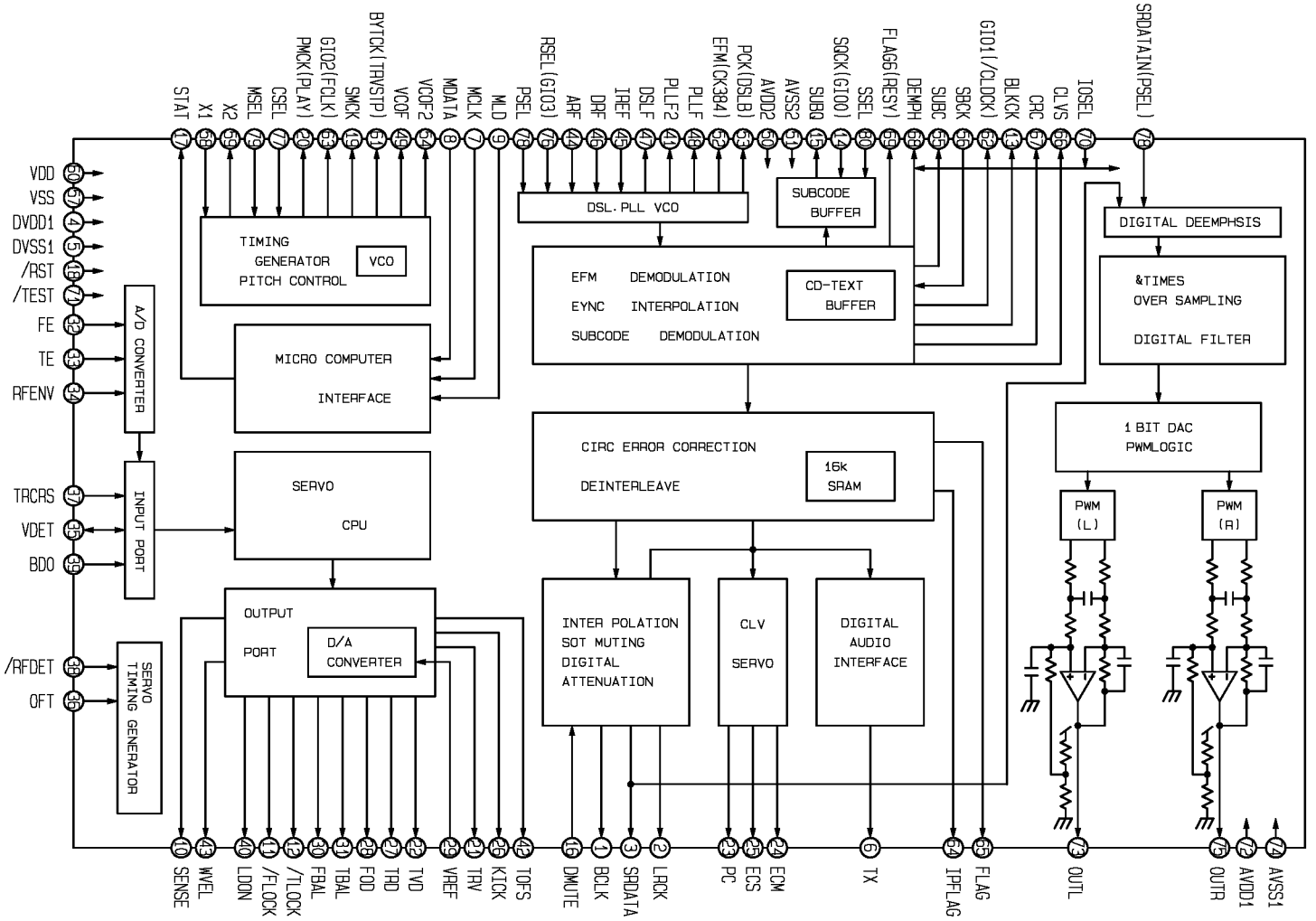
STAT 77
X1 28
X2 29
MSEL 78
CSEL 77
PMCK(PLAY) 20
GIO2(FCLK) 21
SMCK 19
BYTCK(TRVSTP) 31
VCOF 45
VCOF2 44
MDATA 8
MCLK 7
MLD 9
PSEL 78
RSEL(GIO3) 76
ARF 14
DRF 46
IREF 45
DSLF 47
PLLF2 41
PLLF 48
EFM(CK384) 42
PCK(DSLB) 43
AVDD2 30
AVSS2 31
SUBQ 15
SQCK(GIO0) 17
SSEL 80
FLAG6(RESY) 59
DEMPH 58
SUBC 55
SBCK 56
BLKCK 13
CRC 57
CLVS 58
IOSEL 10
SRDATAIN(PSEL) 78
VDD 30
VSS 31
DVDD1 4
DVSS1 5
/RST 16
/TEST 17
FE 32
TE 33
RFENV 34
TRCRS 37
VDET 35
BDO 36
/RFDET 38
OFT 39
TIMING GENERATOR PITCH CONTROL
VCO
DSL. PLL VCO
SUBCODE BUFFER
DIGITAL DEEMPHSIS
EFM DEMODULATION
EYNC INTERPOLATION
SUBCODE DEMODULATION
CD-TEXT BUFFER
&TIMES OVER SAMPLING
DIGITAL FILTER
A/D CONVERTER
MICRO COMPUTER
INTERFACE
CIRC ERROR CORRECTION
DEINTERLEAVE
16k SRAM
1 BIT DAC PWMLOGIC
PWM (L)
PWM (R)
INPUT PORT
SERVO
CPU
OUTPUT PORT
D/A CONVERTER
INTER POLATION SOT MUTING DIGITAL ATTENUATION
CLV SERVO
DIGITAL AUDIO INTERFACE
SERVO TIMING GENERATOR
SENSE 10
WVEL 13
LDON 40
/FLOCK 11
/TLOCK 12
FBAL 30
TBAL 31
FOD 28
TRD 27
TVD 22
VREF 26
TRV 23
KICK 25
TOFS 42
DMUTE 16
BCLK 1
SRDATA 3
LRCK 2
PC 23
ECS 25
ECM 24
TX 6
IPFLAG 64
FLAG 65
OUTL 73
OUTR 75
AVDD1 72
AVSS1 74

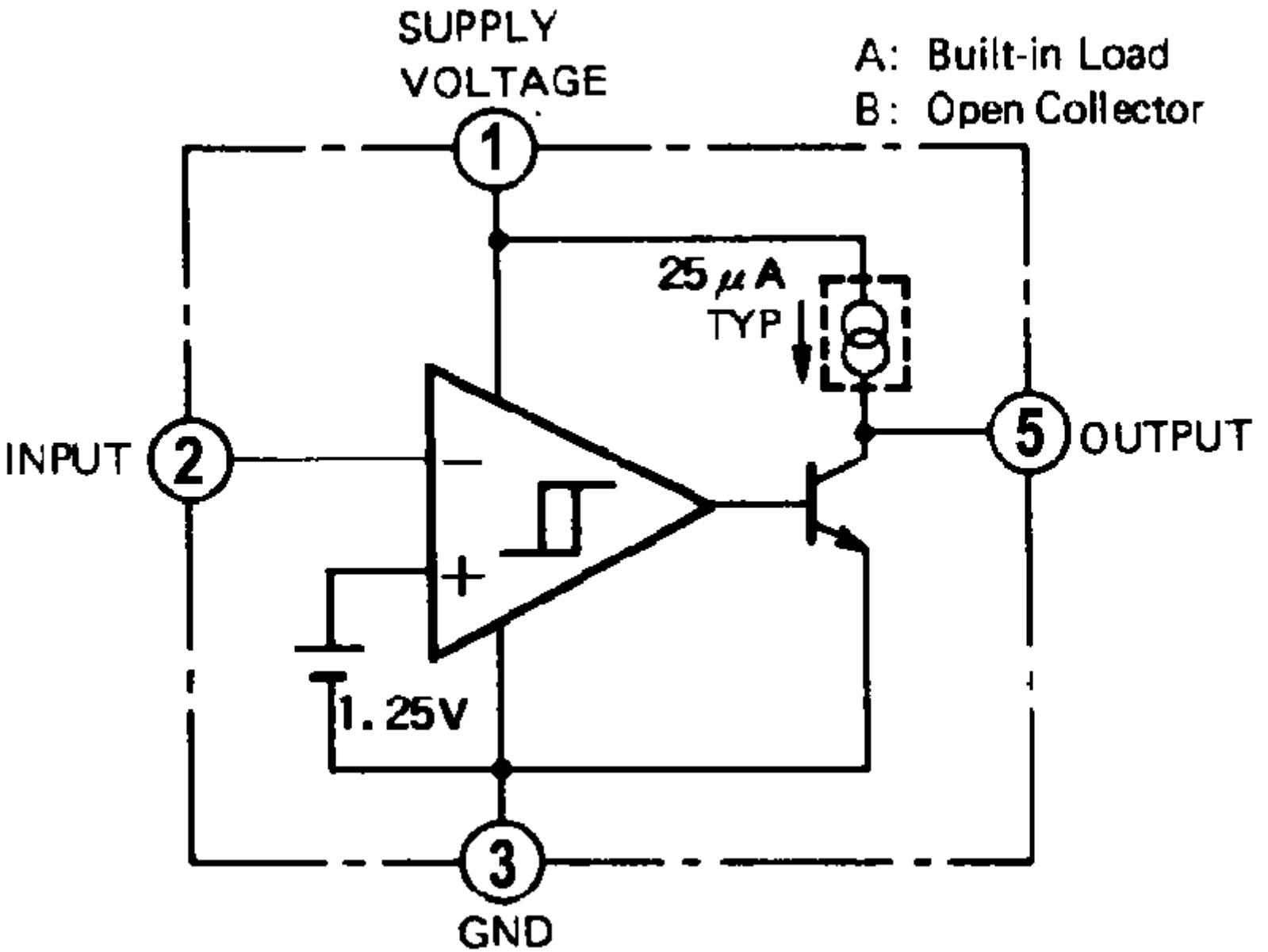
SUPPLY
VOLTAGE
A: Built-in Load
B: Open Collector
1
25μA
TYP
INPUT
2
5
OUTPUT
1.25V
3
GND

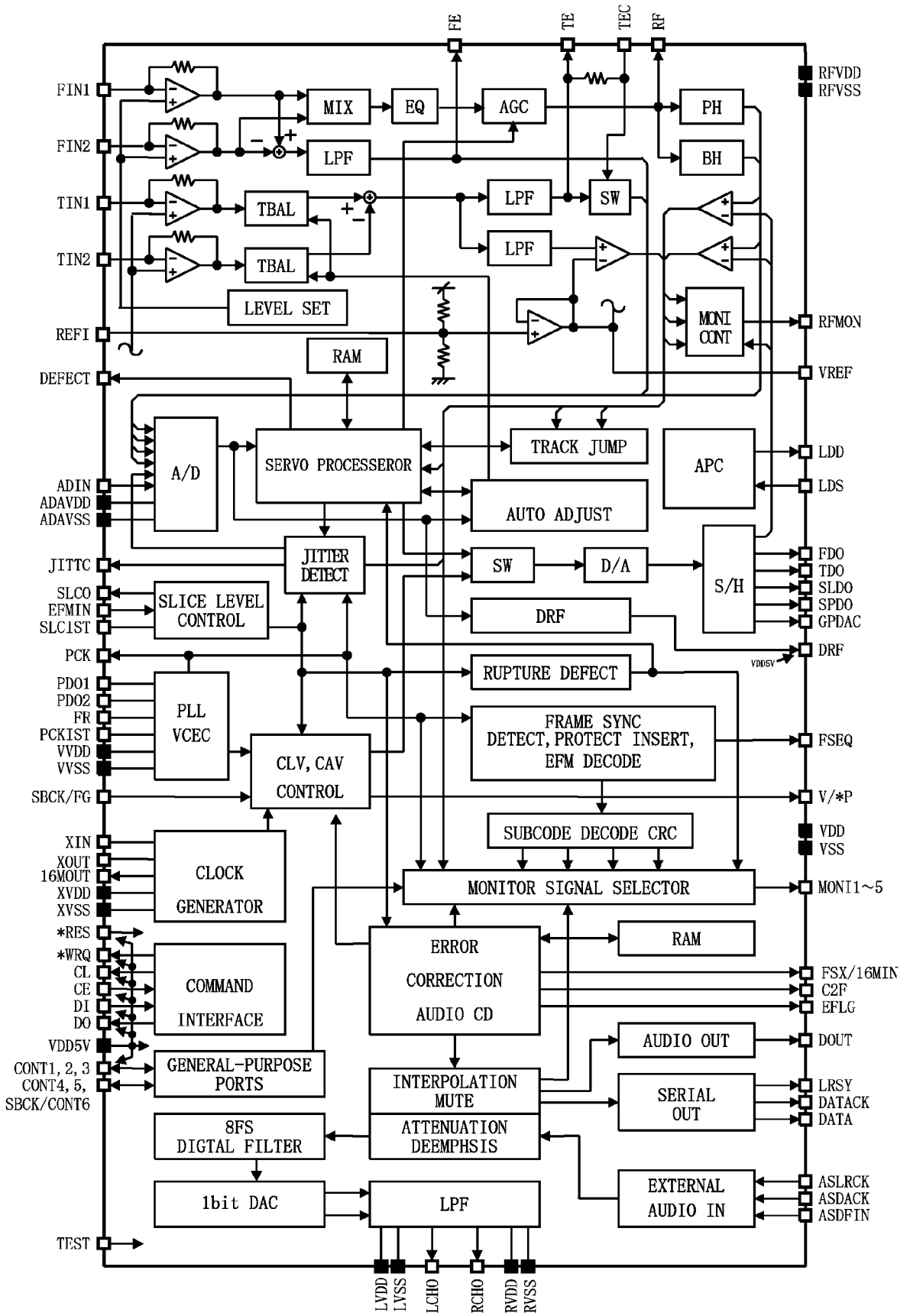
FE
TE
TEC
RF
RFVDD
RFVSS
FIN1
FIN2
TIN1
TIN2
REFI
DEFECT
ADIN
ADAVDD
ADAVSS
JITTC
SLCO
EFMIN
SLC1ST
PCK
PDO1
PDO2
FR
PCKIST
VVDD
VVSS
SBCK/FG
XIN
XOUT
16MOUT
XVDD
XVSS
*RES
*WRQ
CL
CE
DI
DO
VDD5V
CONT1, 2, 3
CONT4, 5,
SBCK/CONT6
TEST
MIX
EQ
AGC
PH
BH
LPF
TBAL
SW
LEVEL SET
MONI CONT
RAM
A/D
SERVO PROCESSEROR
TRACK JUMP
APC
AUTO ADJUST
JITTER DETECT
D/A
S/H
SLICE LEVEL CONTROL
DRF
RUPTURE DEFECT
PLL VCEC
FRAME SYNC DETECT, PROTECT INSERT, EFM DECODE
CLV, CAV CONTROL
SUBCODE DECODE CRC
CLOCK GENERATOR
MONITOR SIGNAL SELECTOR
ERROR CORRECTION AUDIO CD
COMMAND INTERFACE
GENERAL-PURPOSE PORTS
INTERPOLATION MUTE
ATTENUATION DEEMPHSIS
8FS DIGTAL FILTER
1bit DAC
AUDIO OUT
SERIAL OUT
EXTERNAL AUDIO IN
RFMON
VREF
LDD
LDS
FDO
TDO
SLDO
SPDO
GPDAC
DRF
VDD5V
FSEQ
V/*P
VDD
VSS
MONI1~5
FSX/16MIN
C2F
EFLG
DOUT
LRSY
DATACK
DATA
ASLRCK
ASDACK
ASDFIN
LVDD
LVSS
LCHO
RCHO
RVDD
RVSS

IC200 YEAMLA3161

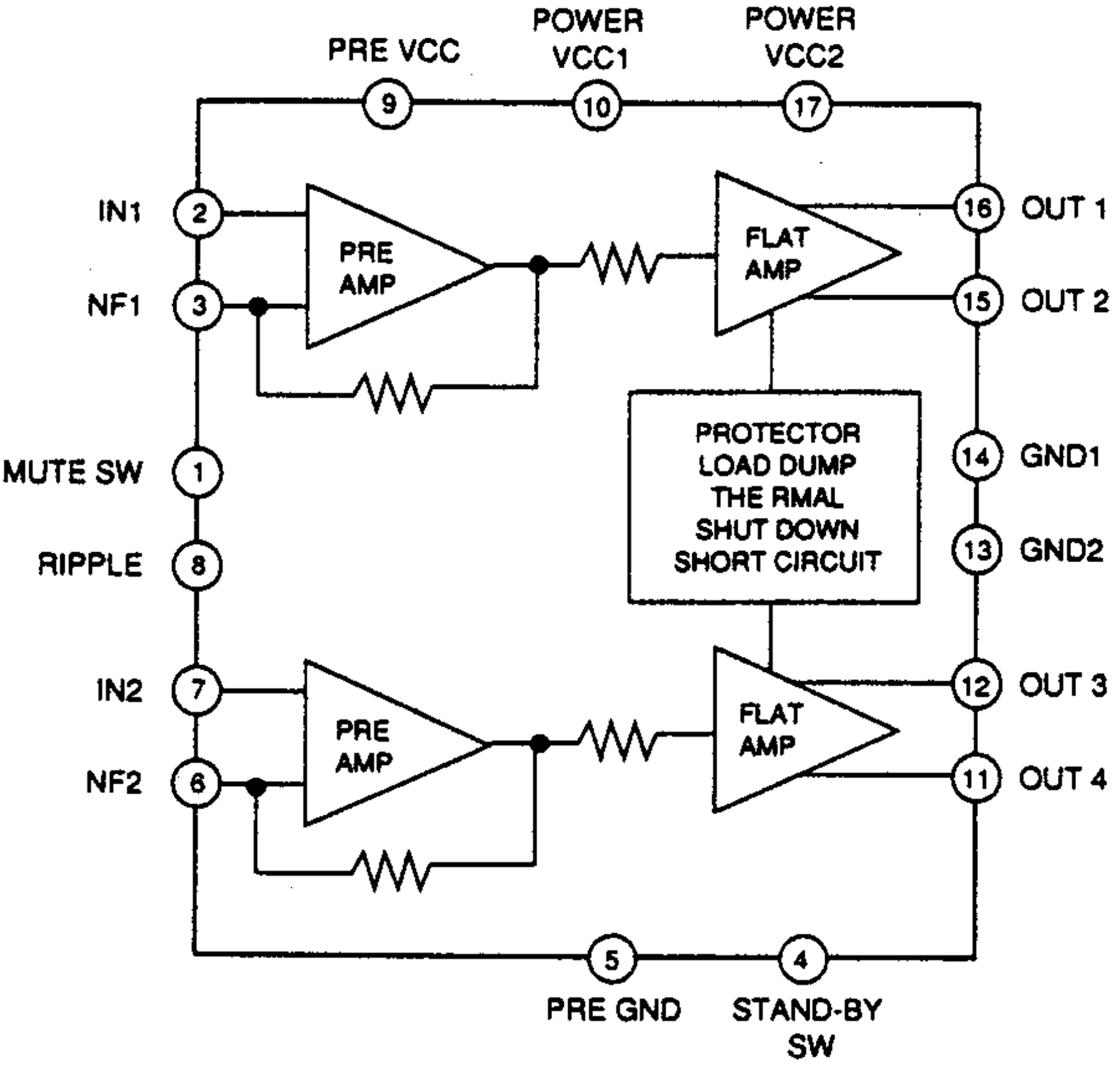

CAUTION:

This product utilizes a laser diode with the unit turned "on", laser radiation is emitted from the pickup lens.

Laser radiation from the pickup lens is safety level, but be sure the followings:

1. Do not disassemble the optical pickup unit, since radiation from exposed laser diode is dangerous.
2. Do not adjust the variable resistor on the pickup unit. It was already adjusted.
3. Do not look at the focus lens using optical instruments.
4. Recommend not to look at pickup lens for a long time.

DANGER! Invisible laser radiation when open. Avoid direct exposure to beam.

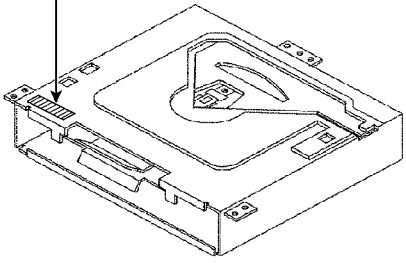

Deck Ass'y (Upper Side)

Caution

This Product utilizes a laser.

Use of controls or adjustments or performance of procedures other than those specified herein may result in hazardous radiation exposure.

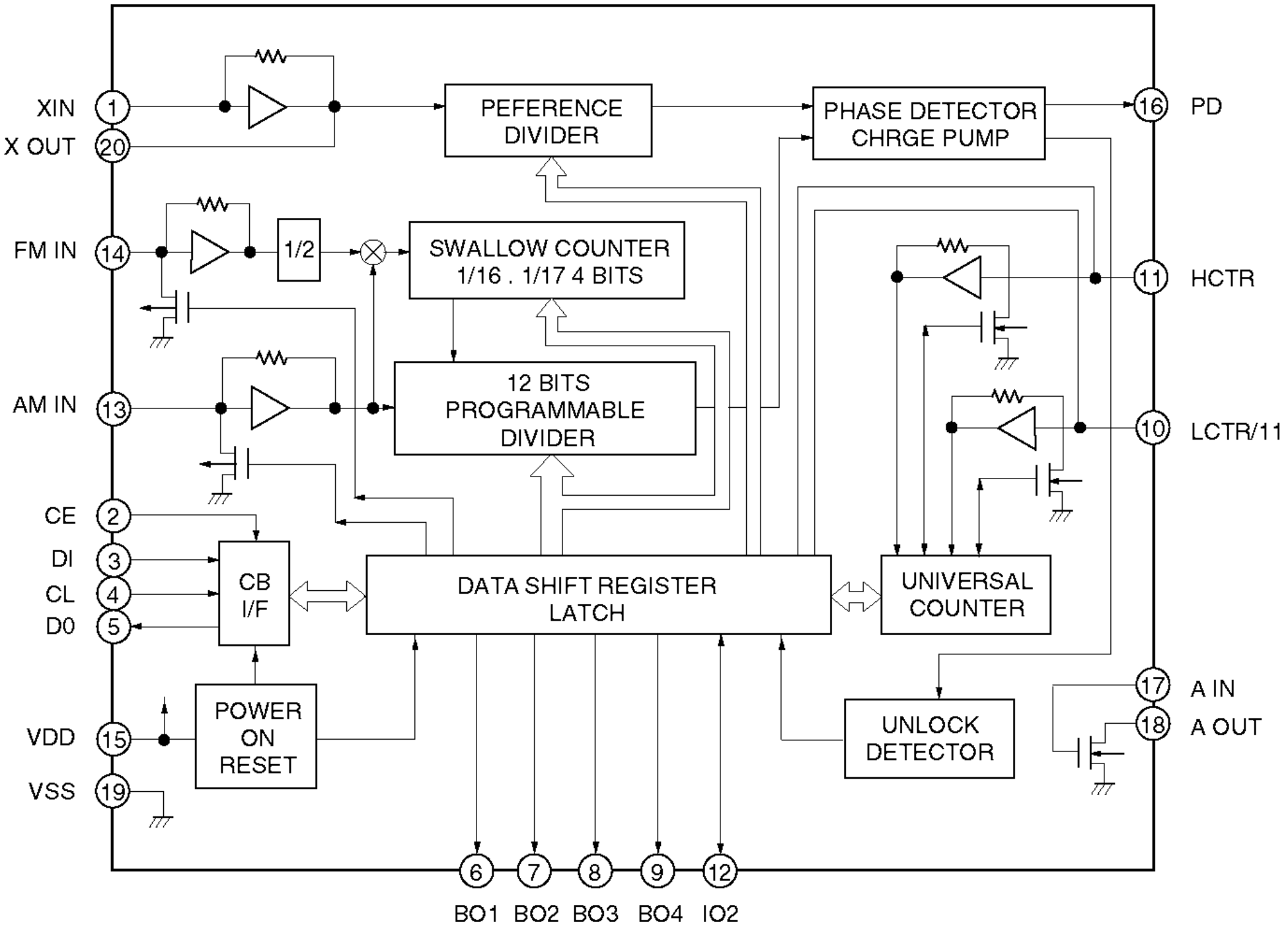
XIN
X OUT
FM IN
AM IN
CE
DI
CL
D0
VDD
VSS
PEFERENCE DIVIDER
PHASE DETECTOR CHRGE PUMP
PD
1/2
SWALLOW COUNTER 1/16 . 1/17 4 BITS
12 BITS PROGRAMMABLE DIVIDER
HCTR
LCTR/11
CB I/F
DATA SHIFT REGISTER LATCH
UNIVERSAL COUNTER
POWER ON RESET
UNLOCK DETECTOR
A IN
A OUT
BO1
BO2
BO3
BO4
IO2

CAUTION:

This product utilizes a laser diode with the unit turned "on", laser radiation is emitted from the pickup lens.

Laser radiation from the pickup lens is safety level, but be sure the followings:

1. Do not disassemble the optical pickup unit, since radiation from exposed laser diode is dangerous.
2. Do not adjust the variable resistor on the pickup unit. It was already adjusted.
3. Do not look at the focus lens using optical instruments.
4. Recommend not to look at pickup lens for a long time.

DANGER! Invisible laser radiation when open. Avold direct exposure to beam.

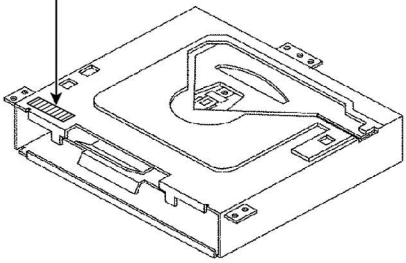

Deck Ass'y (Upper Side)

Caution

This Product utilizes a laser.

Use of controls or adjustments or performance of procedures other than those specified herein may result in hazardous radiation exposure.

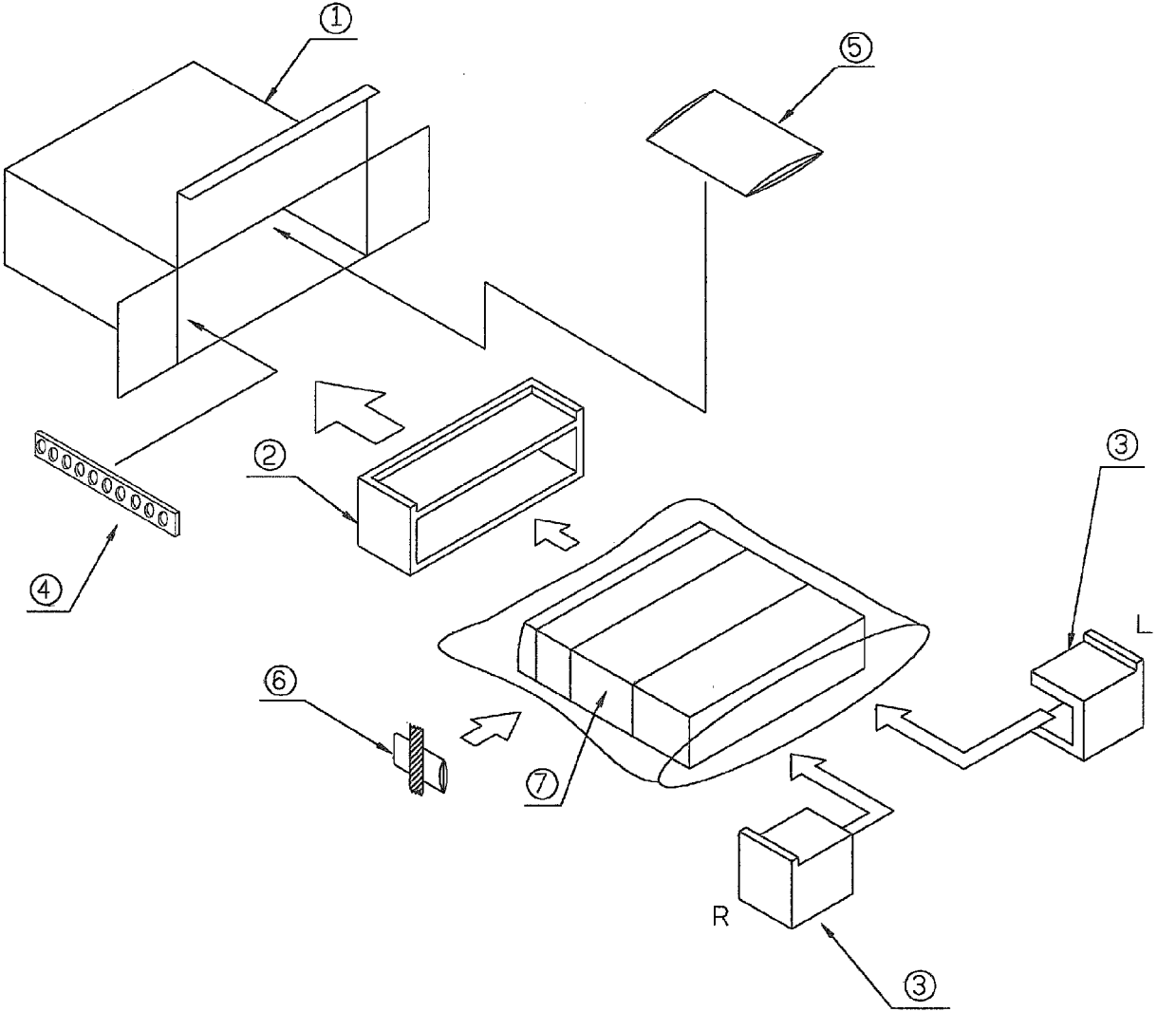
①
⑤
②
③
L
④
⑥
⑦
R
③

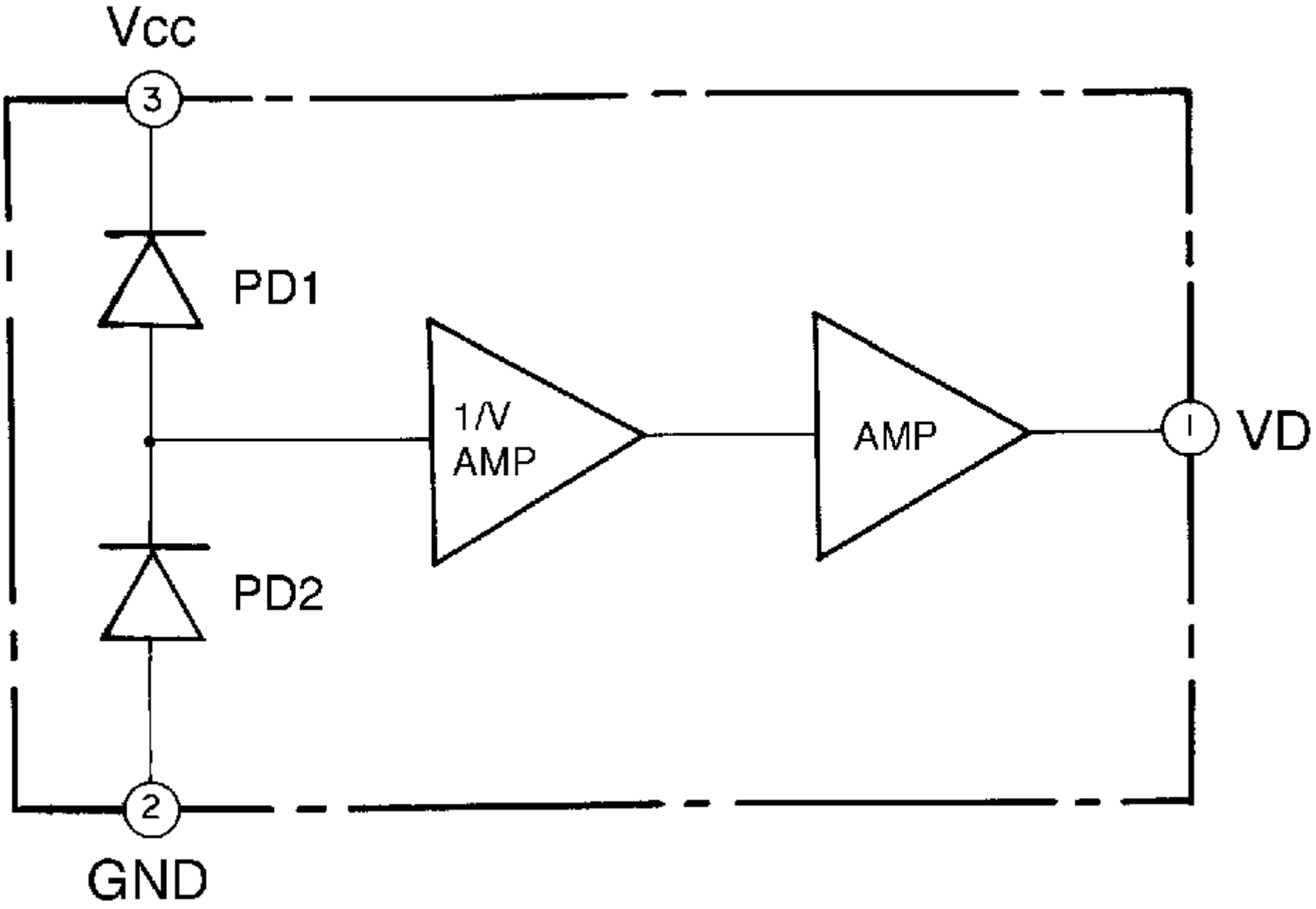
Vcc
3
PD1
1/V
AMP
AMP
1
VD
PD2
2
GND

Note:

1. Be sure to make your orders of replacement parts according to this list.
2. Important safty notice: Component, indentified by ⚠ mark have special characteristics important for safety. when replacing any of these components, use only manufacturer's specified parts.
3. Location keys in the remarks column indicates the general location of the parts shown in the exploded drawing. as in a load map.
4. The marking (RTL) indicates that Retention Time is limited for this item. After the discontinuation of assembly in production, the item will continue to be availability is dependent on the type of assembly, and in accordance with the laws governing part and product retention. Aft the end of this period, the assembly will no longer be available.
5. "T" marks in remarks colum are indicated supply parts of TAMACO.

- Order intake period is basically six months after the first shipment

Note:

1. Be sure to make your orders of replacement parts according to this list.
2. Important safty notice: Component, indentified by ⚠ mark have special characteristics important for safety. when replacing any of these components, use only manufacturer's specified parts.
3. Location keys in the remarks column indicates the general location of the parts shown in the exploded drawing. as in a load map.
4. The marking (RTL) indicates that Retention Time is limited for this item. After the discontinuation of assembly in production, the item will continue to be availability is dependent on the type of assembly, and in accordance with the laws governing part and product retention. Aft the end of this period, the assembly will no longer be available.
5. "T" marks in remarks colum are indicated supply parts of TAMACO.

- Order intake period is basically six months after the first shipment

E-4C269

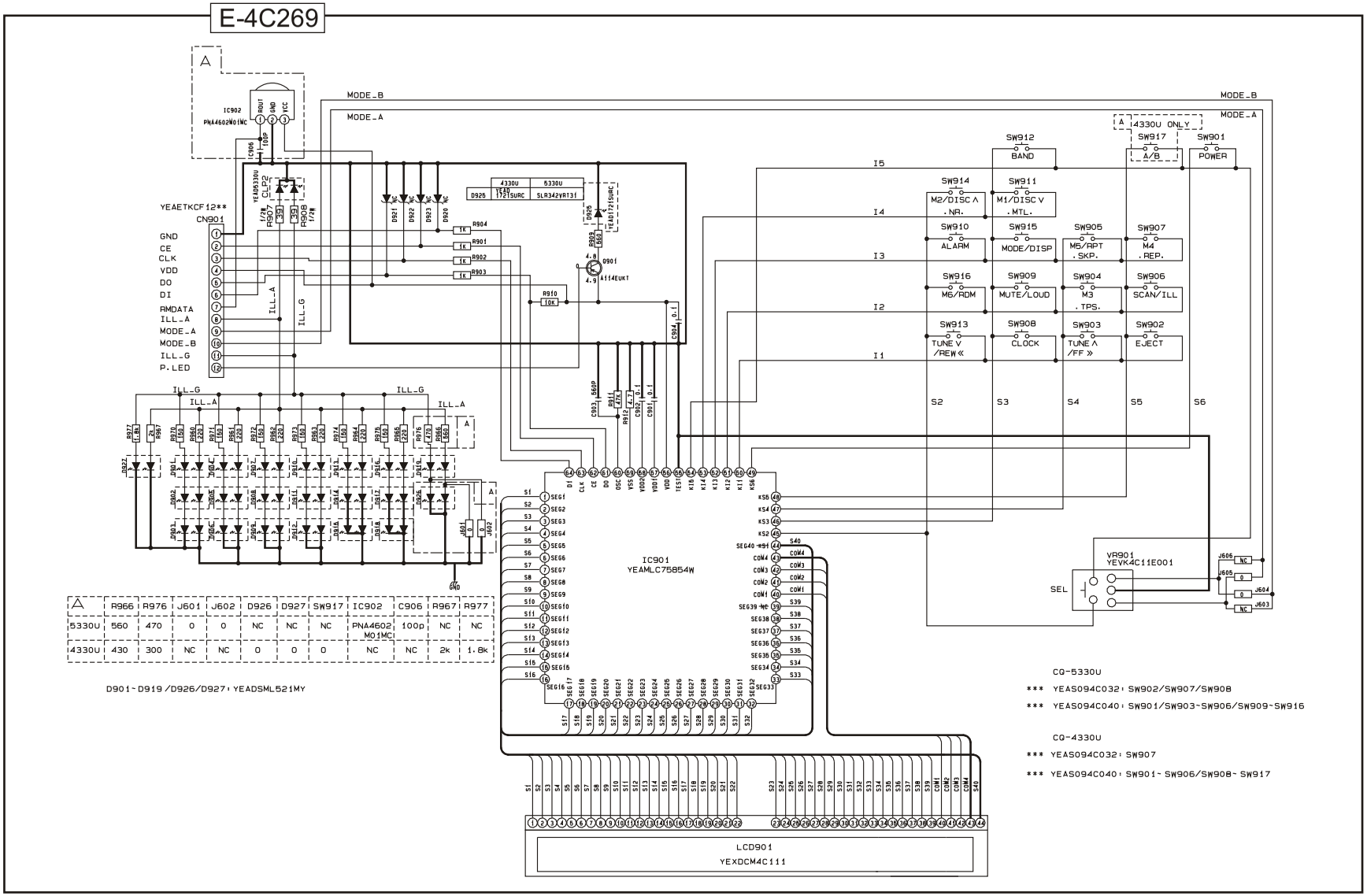

A	R966	R976	J601	J602	D926	D927	SW917	IC902	C906	R967	R977
5330U	560	470	0	0	NC	NC	NC	PNA4602 M01MC	100p	NC	NC
4330U	430	300	NC	NC	0	0	0	NC	NC	2k	1.8k

D901~D919/D926/D927: YEADSML521MY

CQ-5330U

*** YEAS094C032: SW902/SW907/SW908

*** YEAS094C040: SW901/SW903~SW906/SW909~SW916

CQ-4330U

*** YEAS094C032: SW907

*** YEAS094C040: SW901~SW906/SW908~SW917

CQ-5330U / 4330U Display Block

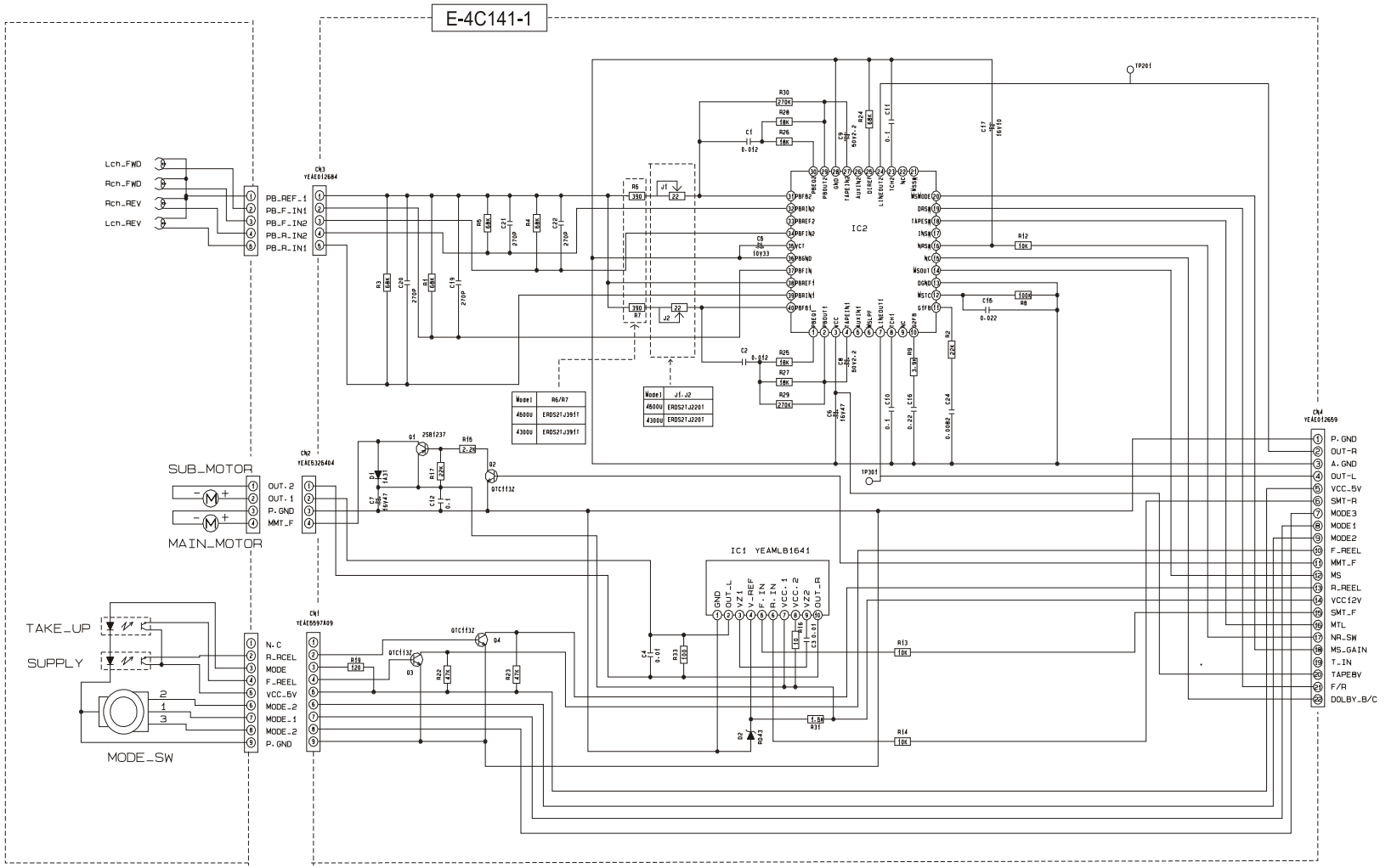

Mode1	R6/R7
4600U	ERDS2TJ391T
4300U	ERDS2TJ391T

Mode1	J1.J2
4600U	ERDS2TJ220T
4300U	ERDS2TJ220T

CQ-4330U Tape Block

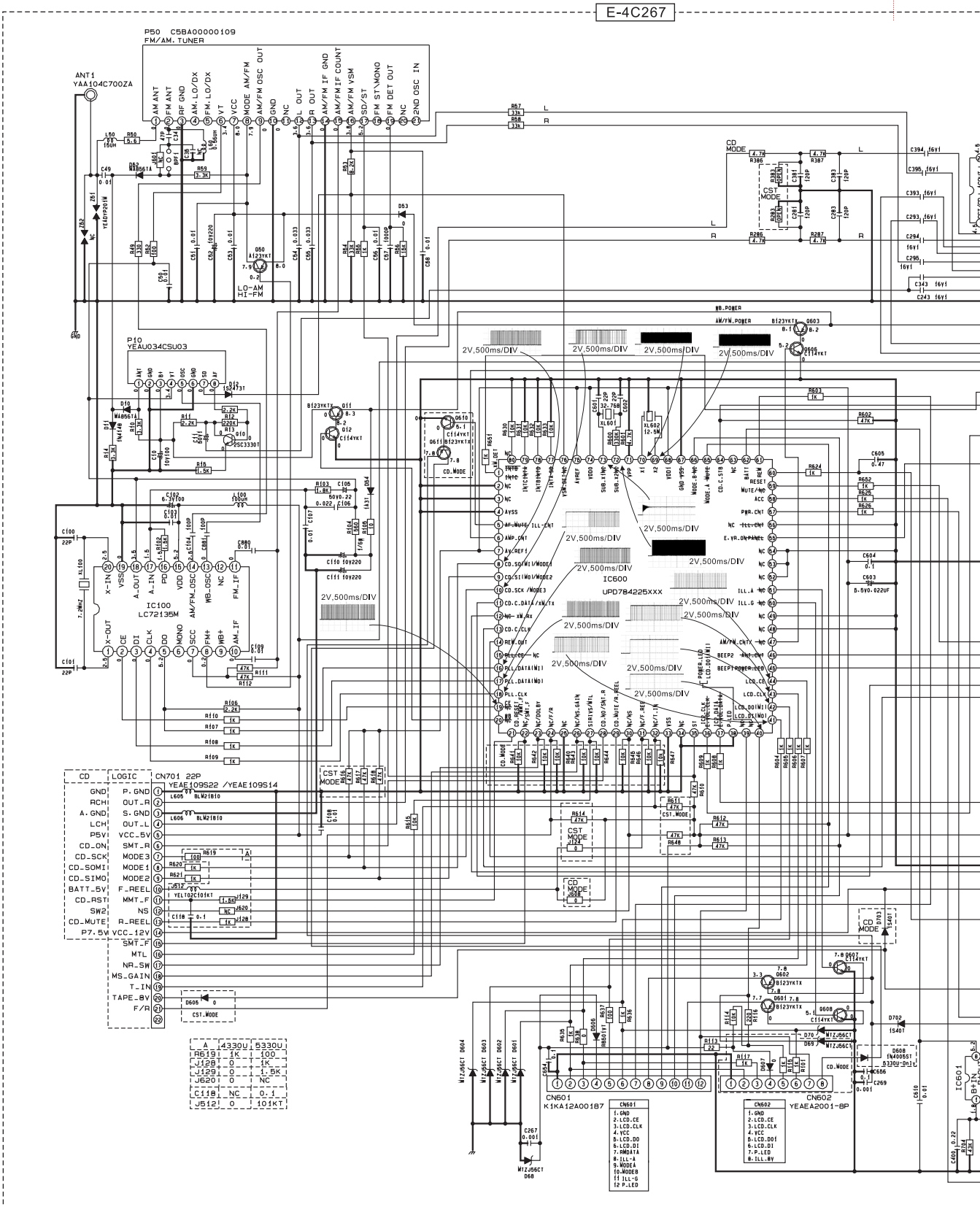

A	4330U	5330U
R619	1K	100
J128	0	1K
J129	0	1.5K
J620	0	NC
C118	NC	0.1
J512	0	101KT

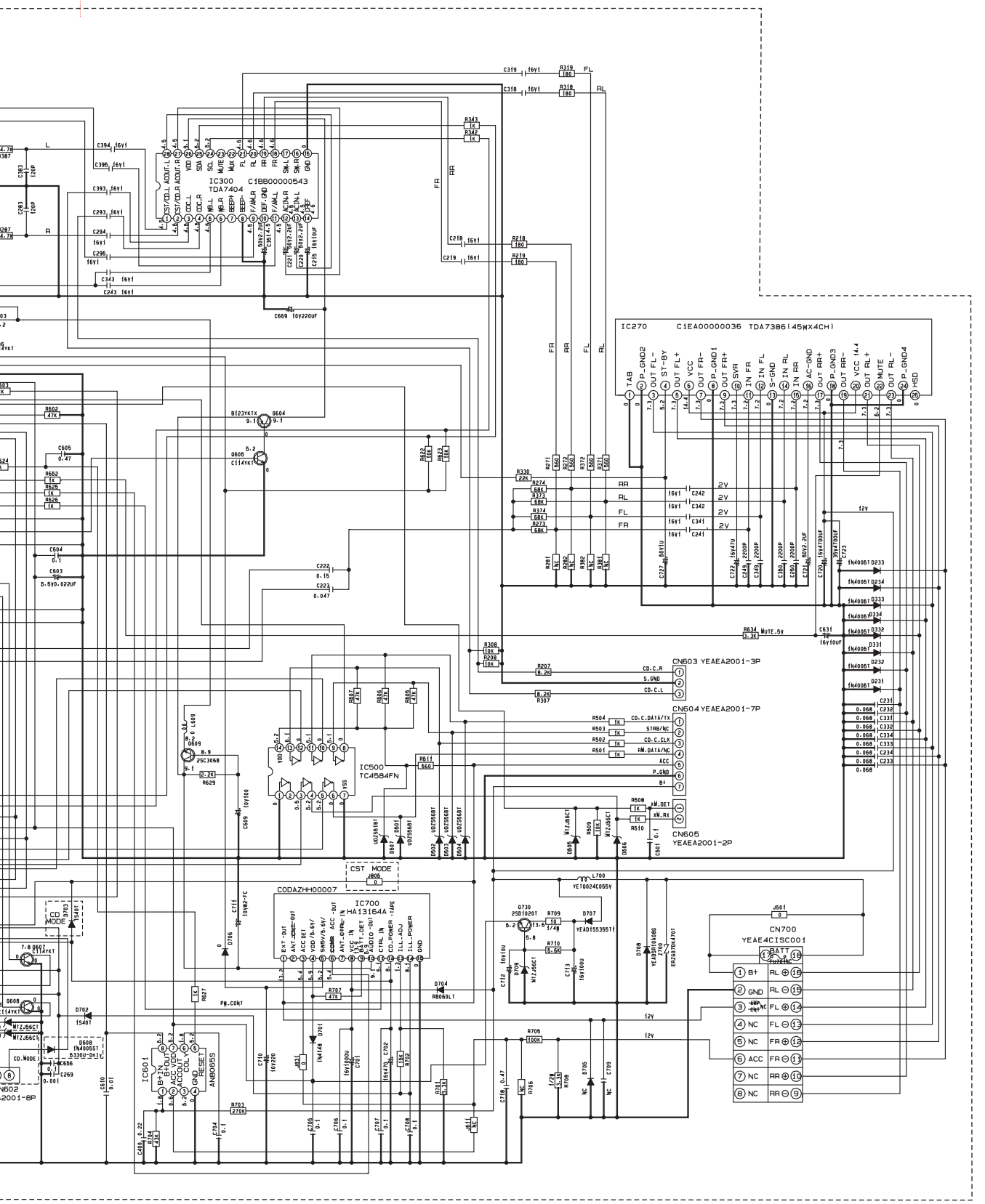

CQ-5330U / 4330U Main Block

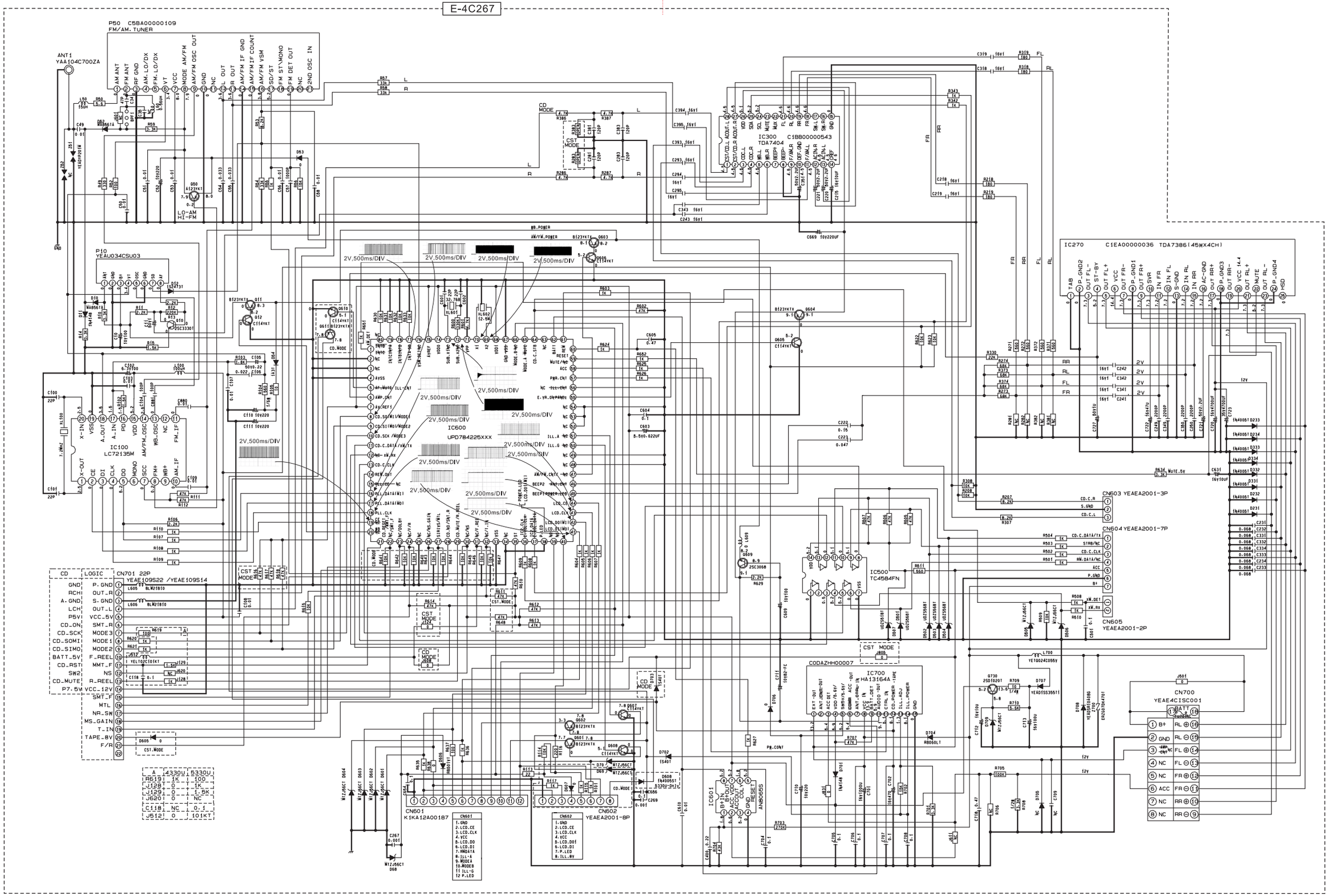
P50 C5BA00000109
FM/AM. TUNER
ANT1
YAA104C700ZA
IC100
LC72135M
IC300 C1BB00000543
TDA7404
IC270 C1EA00000036 TDA7386(45WX4CH)
IC600
UPD784225XXX
IC500
TC4584FN
IC700
HA13164A
CODAZHH00007
IC601
AN8505S
CN701 22P
YEAE109S22 /YEAE109S14
CN601
K1KA12A001B7
CN602
YEAEA2001-8P
CN603 YEAEA2001-3P
CN604 YEAEA2001-7P
CN605
YEAEA2001-2P
CN700
YEAE4C1SC001
P10
YEAU034CSU03
LO-AM
HI-FM
CD MODE
CST MODE
2V,500ms/DIV

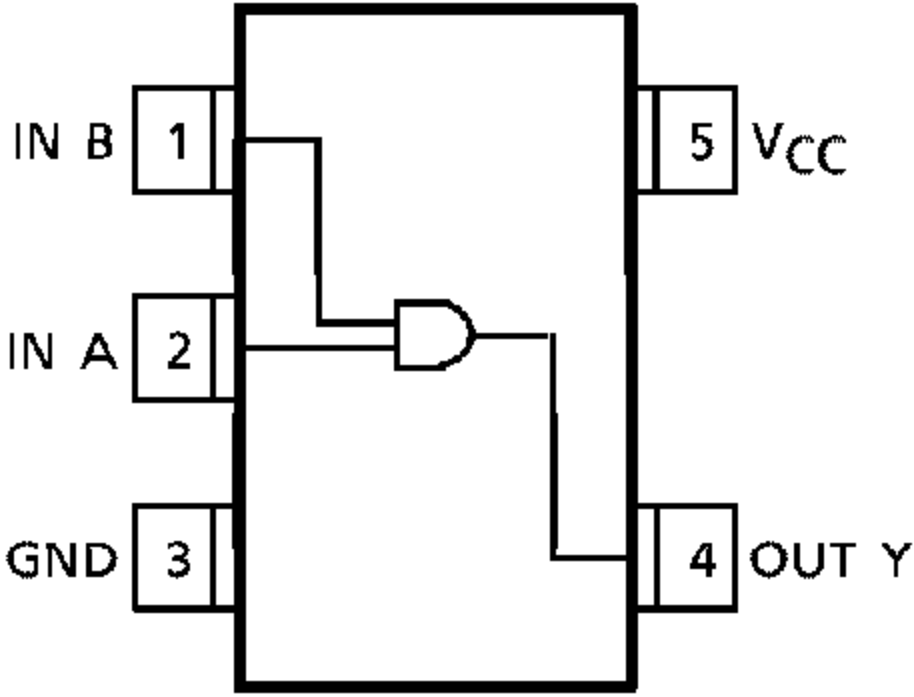
IN B
1
IN A
2
GND
3
5
V_{CC}
4
OUT Y

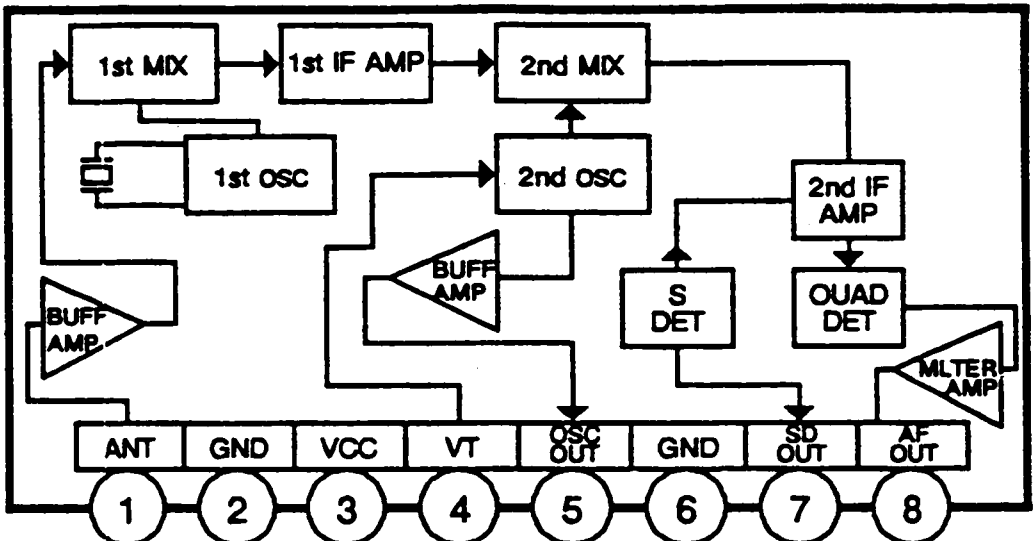
1st MIX
1st IF AMP
2nd MIX
1st OSC
2nd OSC
2nd IF AMP
BUFF AMP
BUFF AMP
S DET
QUAD DET
MLTER AMP
ANT
GND
VCC
VT
OSC OUT
GND
SD OUT
AF OUT
1
2
3
4
5
6
7
8

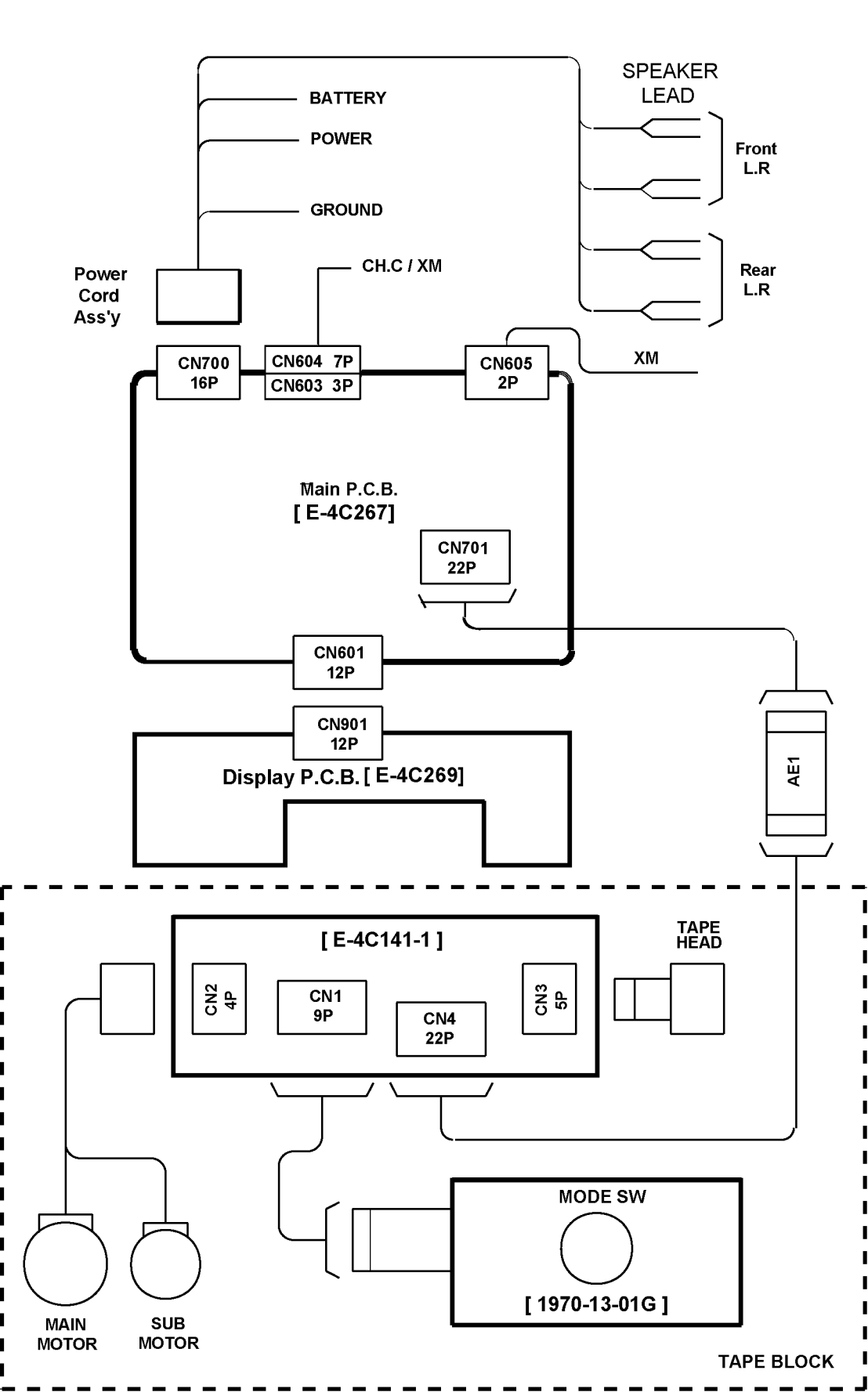
SPEAKER LEAD
BATTERY
POWER
GROUND
Front L.R
Rear L.R
Power Cord Ass'y
CH.C / XM
XM
CN700 16P
CN604 7P
CN603 3P
CN605 2P
Main P.C.B.
[E-4C267]
CN701 22P
CN601 12P
CN901 12P
Display P.C.B. [E-4C269]
AE1
[E-4C141-1]
TAPE HEAD
CN2 4P
CN1 9P
CN4 22P
CN3 5P
MODE SW
[1970-13-01G]
MAIN MOTOR
SUB MOTOR
TAPE BLOCK

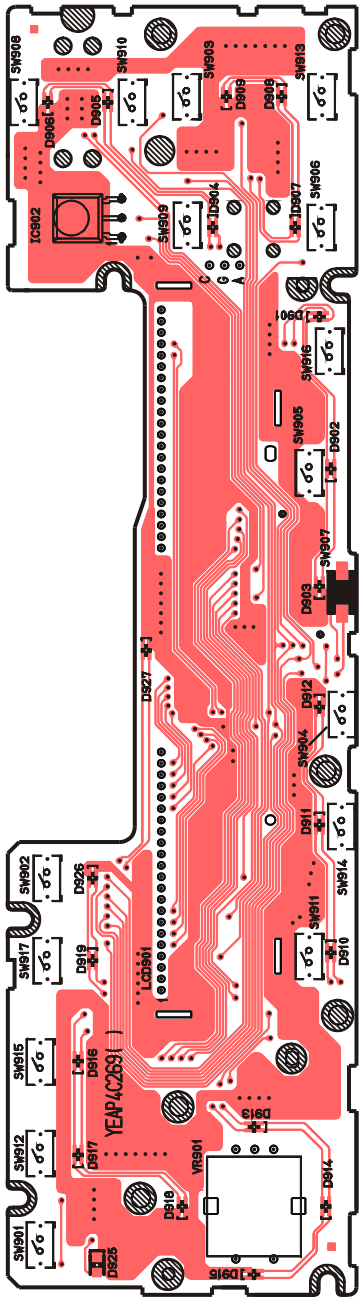

[E-4C269] [TOP VIEW]

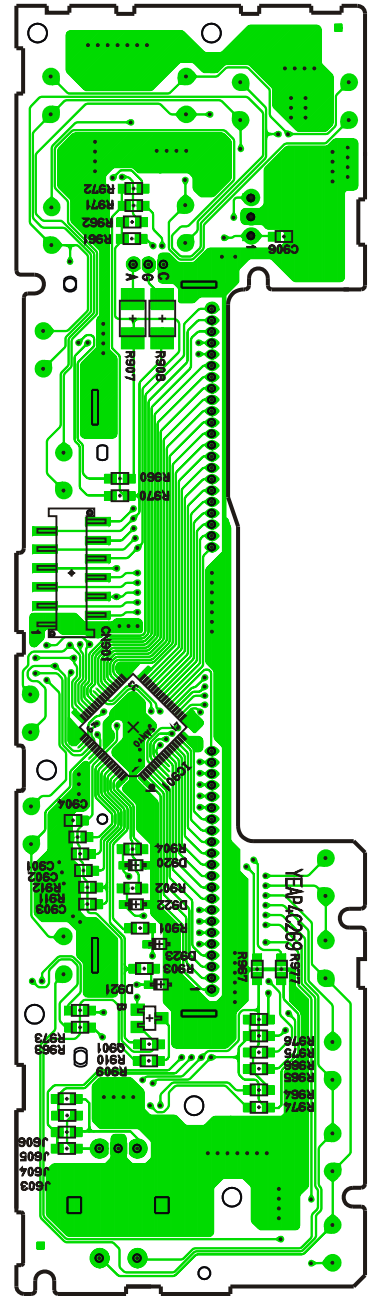

[E-4C269] [BOTTOM VIEW]

CQ-4330U Display PCB

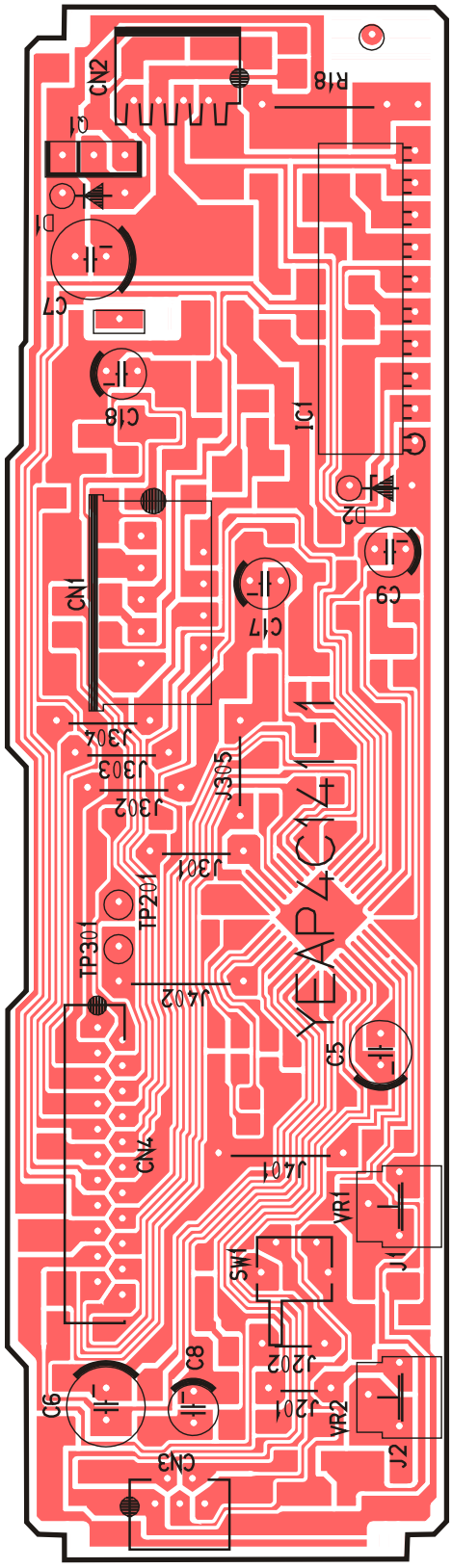

[E-4C141-1] [TOP VIEW]

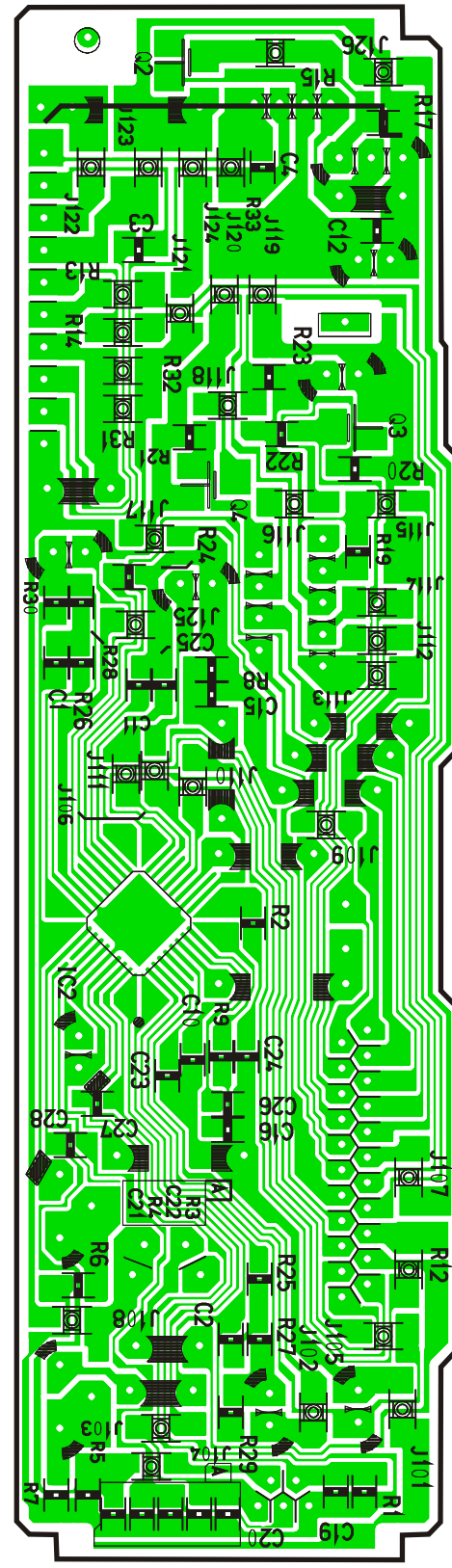

[E-4C141-1] [BOTTOM VIEW]

CQ-4330U Tpae PCB

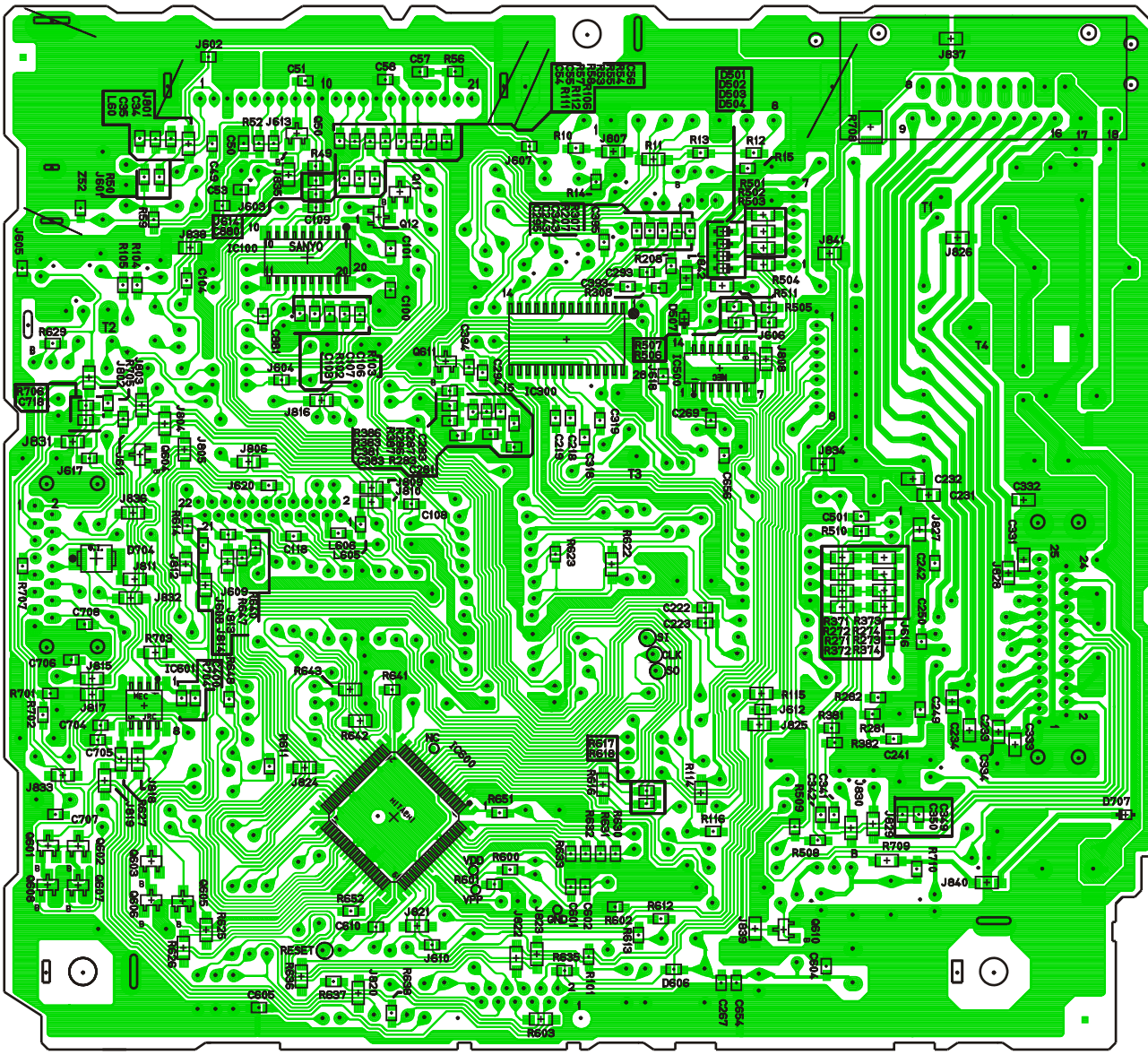

[E-4C267] [BOTTOM VIEW]

CQ-5330U / 4330U Main PCB

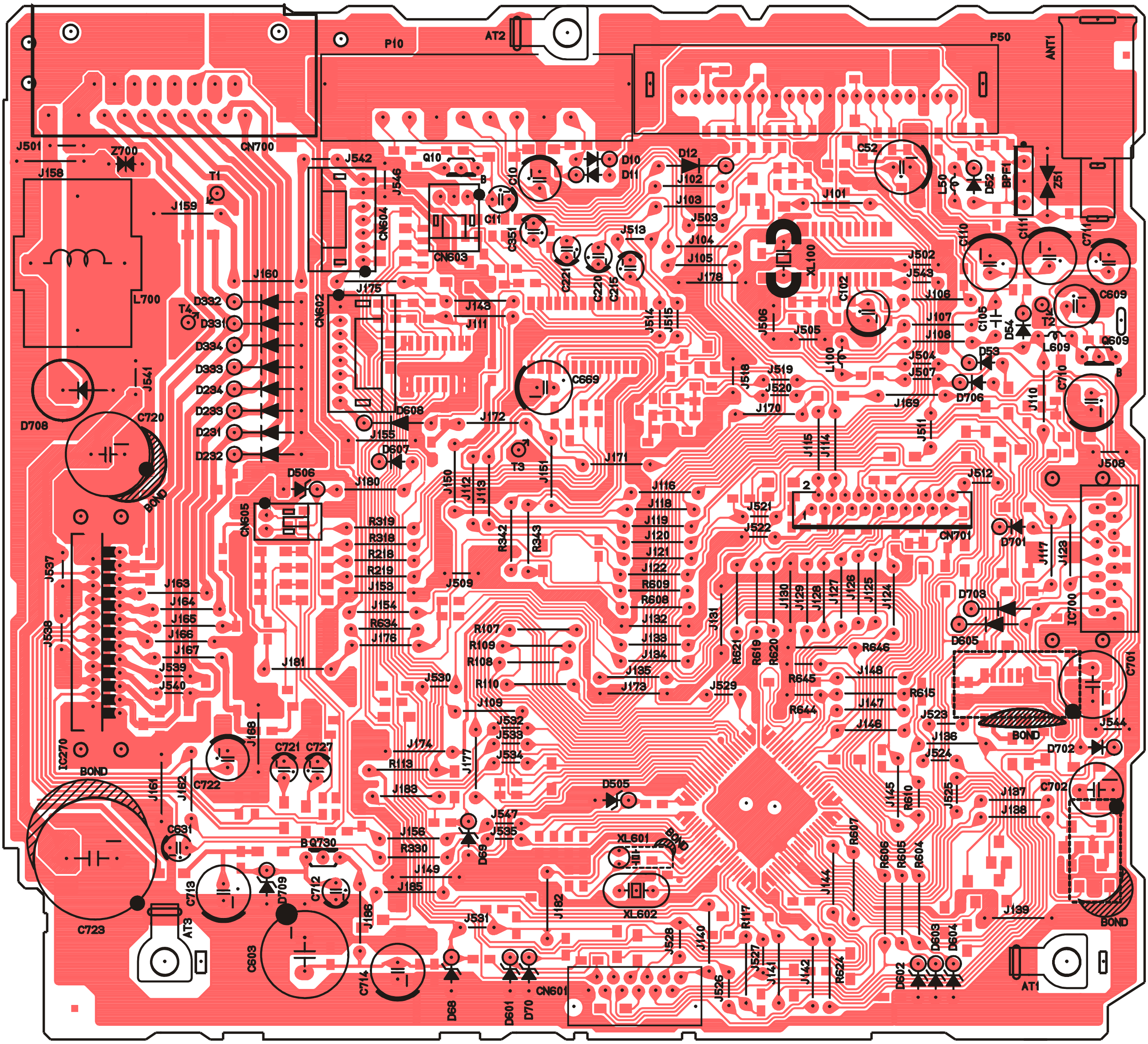

[E-4C267] [TOP VIEW]

CQ-5330U / 4330U Main PCB