45Wx4
COMPACT disc DIGITAL AUDIO
BAND
APM
VOLUME / PUSH SEL
Panasonic
CQ-C1120H
D-M
TUNE
TRACK
REP
RANDOM
POWER
SRC
SQ
ST
7
8
9
10
11
12
SCAN
MUTE
1
2
3
4
5
6
SQ
CLOCK
DISP

45Wx4
II / ►
BAND
APM
POWER
SRC
VOLUME / PUSH SEL
Panasonic
CQ-C1130H
87.9 FM2
SQ
ST
D-M
TUNE
TRACK
REP
RANDOM
CLOCK
DISP
7
8
9
10
11
12
SCAN
MUTE
1
2
3
4
5
6
SQ

178mm
155mm
50mm
45Wx4
BAND
APM
POWER
SRC
VOLUME / PUSH SEL
Panasonic
CQ-C1130H
87.9 FM2
SQ
D-M
TUNE
TRACK
REP
RANDOM
CLOCK
DISP
MUTE
7
8
9
10
11
12
SCAN
1
2
3
4
5
6
SQ

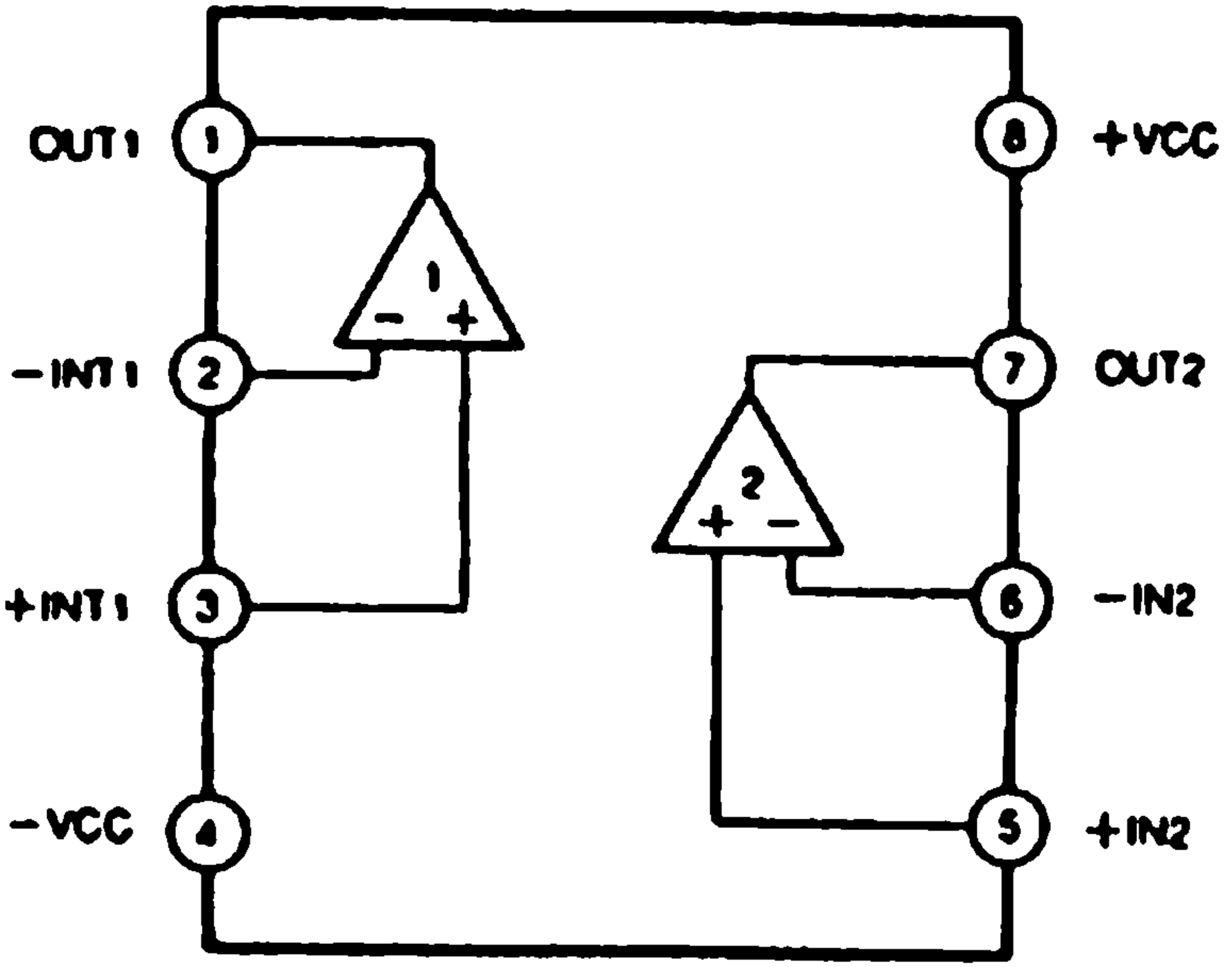
OUT1
1
-INT1
2
+INT1
3
-VCC
4
+VCC
8
OUT2
7
-IN2
6
+IN2
5
1
2

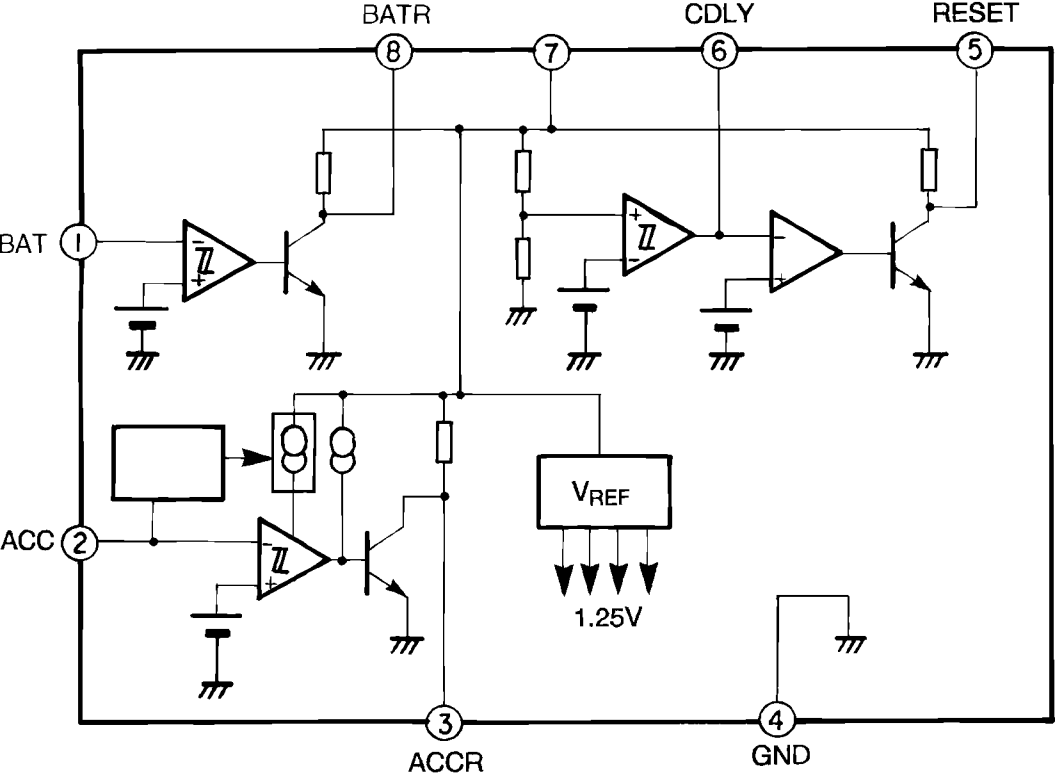
BATR
CDLY
RESET
8
7
6
5
BAT
1
ACC
2
VREF
1.25V
3
4
ACCR
GND

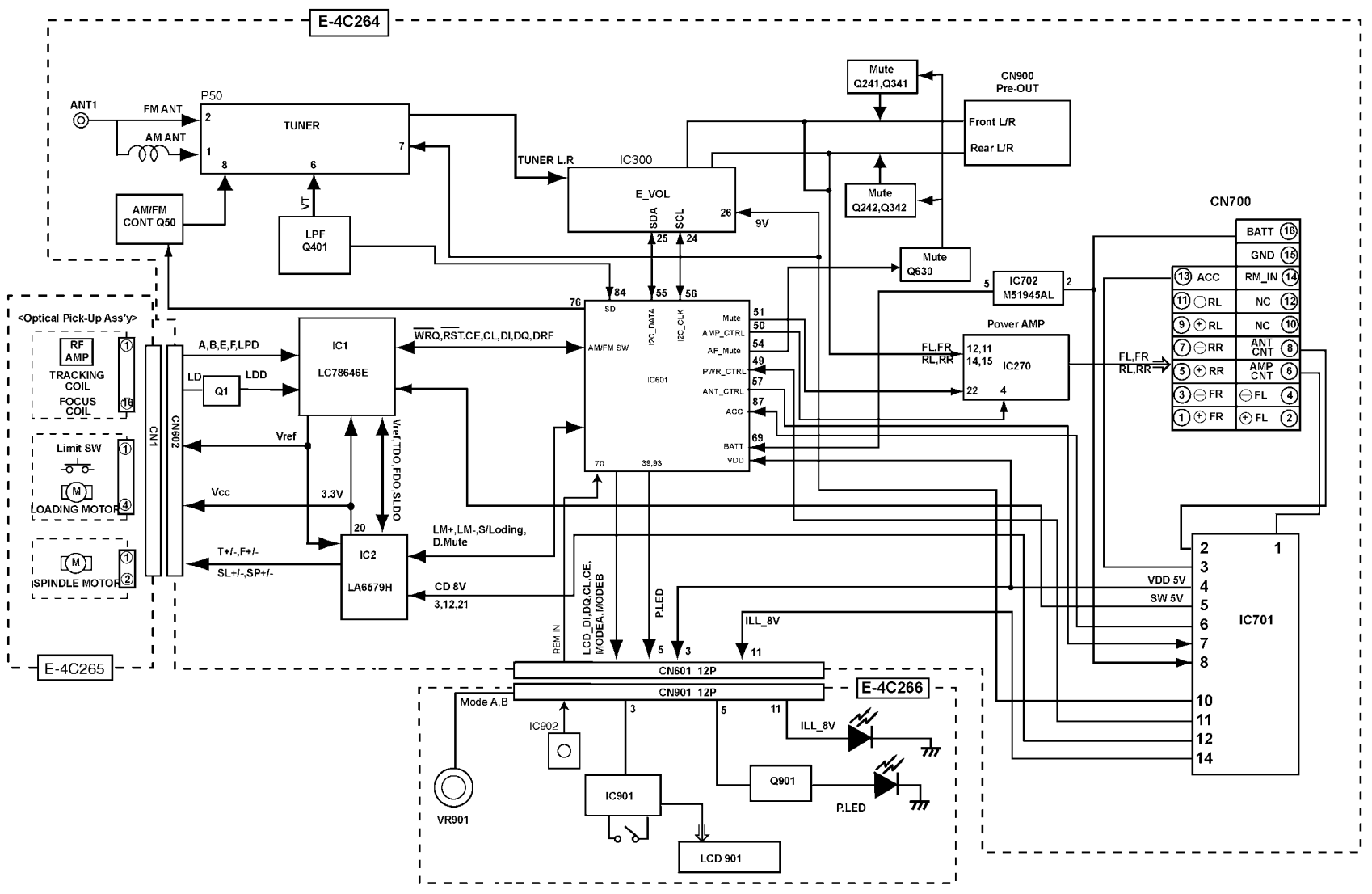
E-4C264
ANT1
FM ANT
AM ANT
P50
TUNER
AM/FM CONT Q50
VT
LPF Q401
TUNER L.R
IC300
E_VOL
SDA
SCL
9V
Mute Q241,Q341
Mute Q242,Q342
Mute Q630
CN900 Pre-OUT
Front L/R
Rear L/R
CN700
BATT
GND
ACC
RM_IN
RL
NC
RR
ANT CNT
AMP CNT
FR
FL
IC702 M51945AL
Power AMP
IC270
FL,FR RL,RR
<Optical Pick-Up Ass'y>
RF AMP
TRACKING COIL
FOCUS COIL
Limit SW
LOADING MOTOR
SPINDLE MOTOR
CN1
CN602
A,B,E,F,LPD
LD
LDD
Q1
IC1
LC78646E
Vref
Vcc
3.3V
Vref,TDO,FDO,SLDO
WRQ,RST,CE,CL,DI,DQ,DRF
SD
AM/FM SW
I2C_DATA
I2C_CLK
IC601
Mute
AMP_CTRL
AF_Mute
PWR_CTRL
ANT_CTRL
ACC
BATT
VDD
LM+,LM-,S/Loding, D.Mute
T+/-,F+/-
SL+/-,SP+/-
IC2
LA6579H
CD 8V
3,12,21
REM IN
LCD,DI,DQ,CL,CE, MODEA,MODEB
P.LED
ILL_8V
VDD 5V
SW 5V
IC701
CN601 12P
CN901 12P
E-4C265
E-4C266
Mode A,B
IC902
VR901
IC901
LCD 901
Q901
P.LED

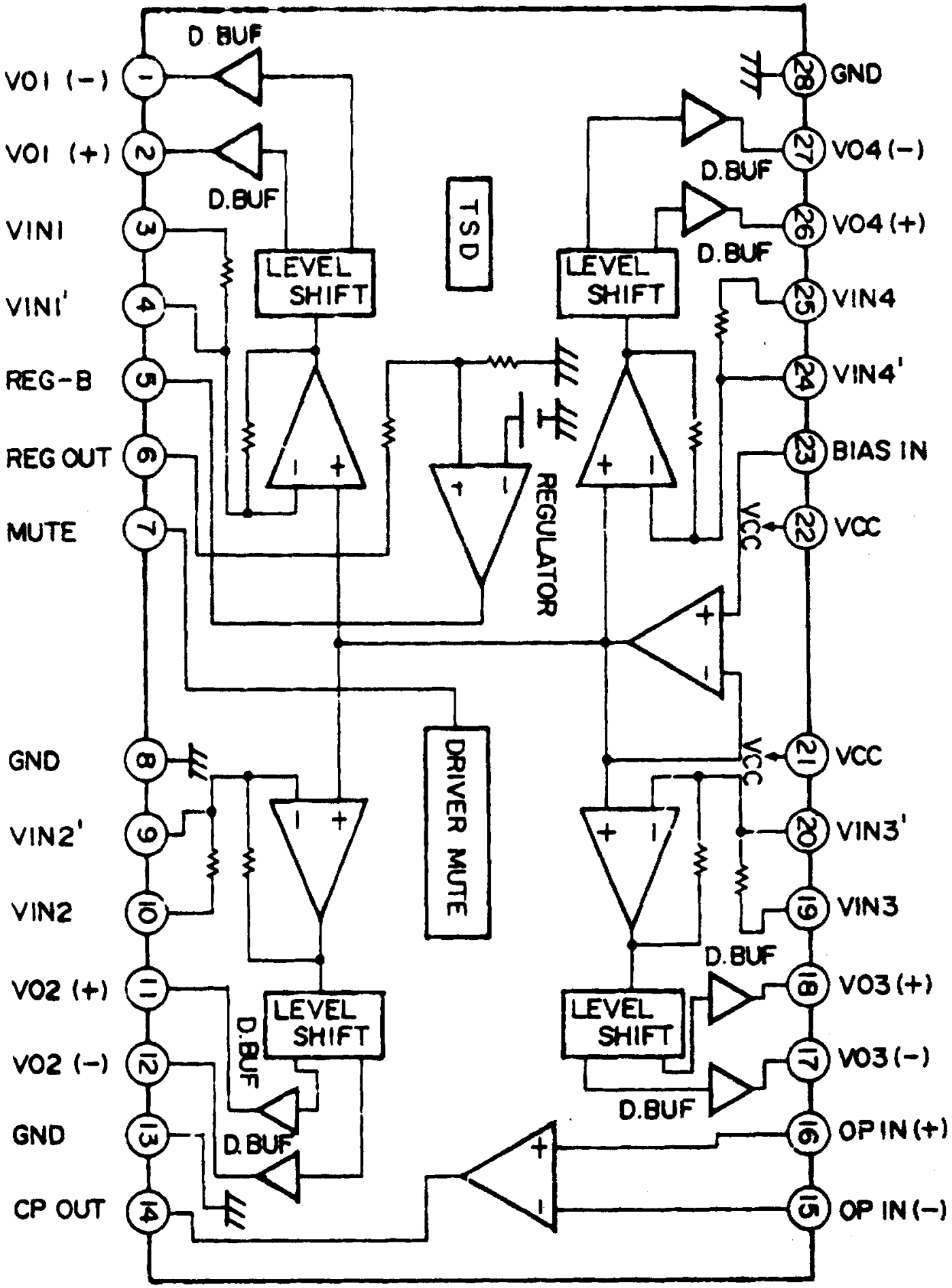
VO1 (−)
VO1 (+)
VIN1
VIN1'
REG-B
REG OUT
MUTE
GND
VIN2'
VIN2
VO2 (+)
VO2 (−)
GND
CP OUT
GND
VO4 (−)
VO4 (+)
VIN4
VIN4'
BIAS IN
VCC
VCC
VIN3'
VIN3
VO3 (+)
VO3 (−)
OP IN (+)
OP IN (−)
D. BUF
D.BUF
LEVEL SHIFT
TSD
REGULATOR
DRIVER MUTE

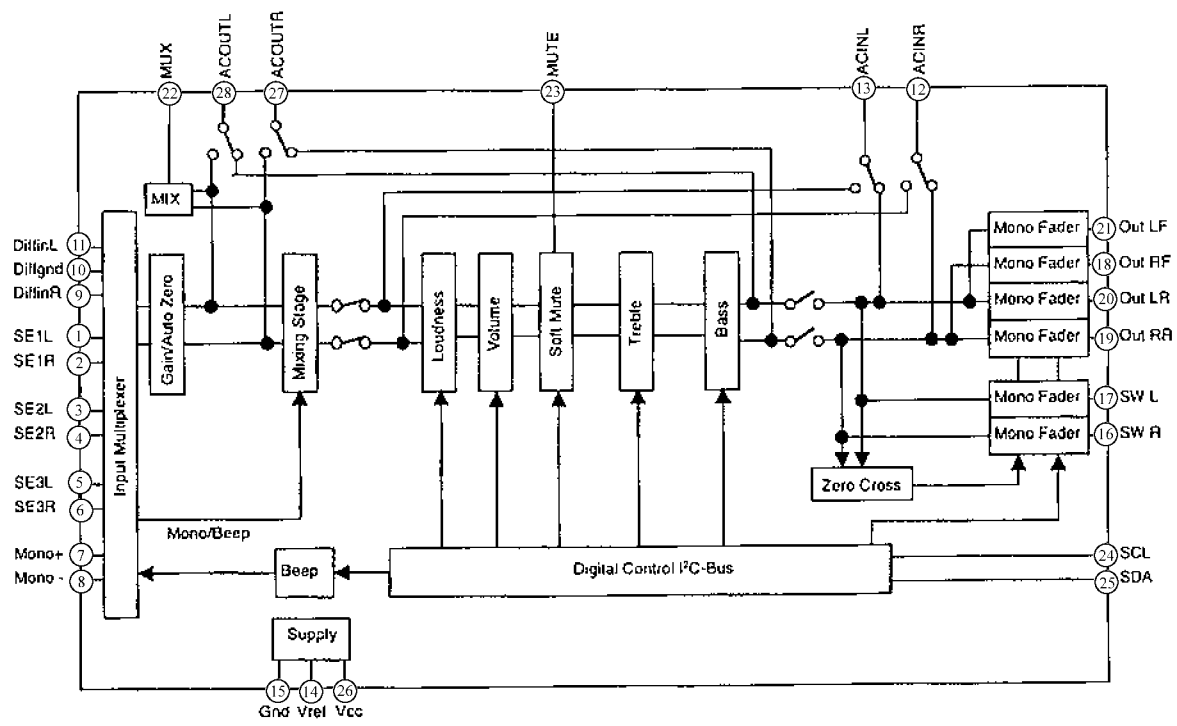
MUX
ACOUTL
ACOUTR
MUTE
ACINL
ACINR
22
28
27
23
13
12
MIX
DiffinL 11
Diffgnd 10
DiffinR 9
SE1L 1
SE1R 2
SE2L 3
SE2R 4
SE3L 5
SE3R 6
Mono+ 7
Mono - 8
Input Multiplexer
Gain/Auto Zero
Mixing Stage
Loudness
Volume
Soft Mute
Treble
Bass
Mono Fader
Mono Fader
Mono Fader
Mono Fader
Mono Fader
Mono Fader
21 Out LF
18 Out RF
20 Out LR
19 Out RR
17 SW L
16 SW R
Zero Cross
Mono/Beep
Beep
Digital Control I²C-Bus
24 SCL
25 SDA
Supply
15 Gnd
14 Vref
26 Vcc

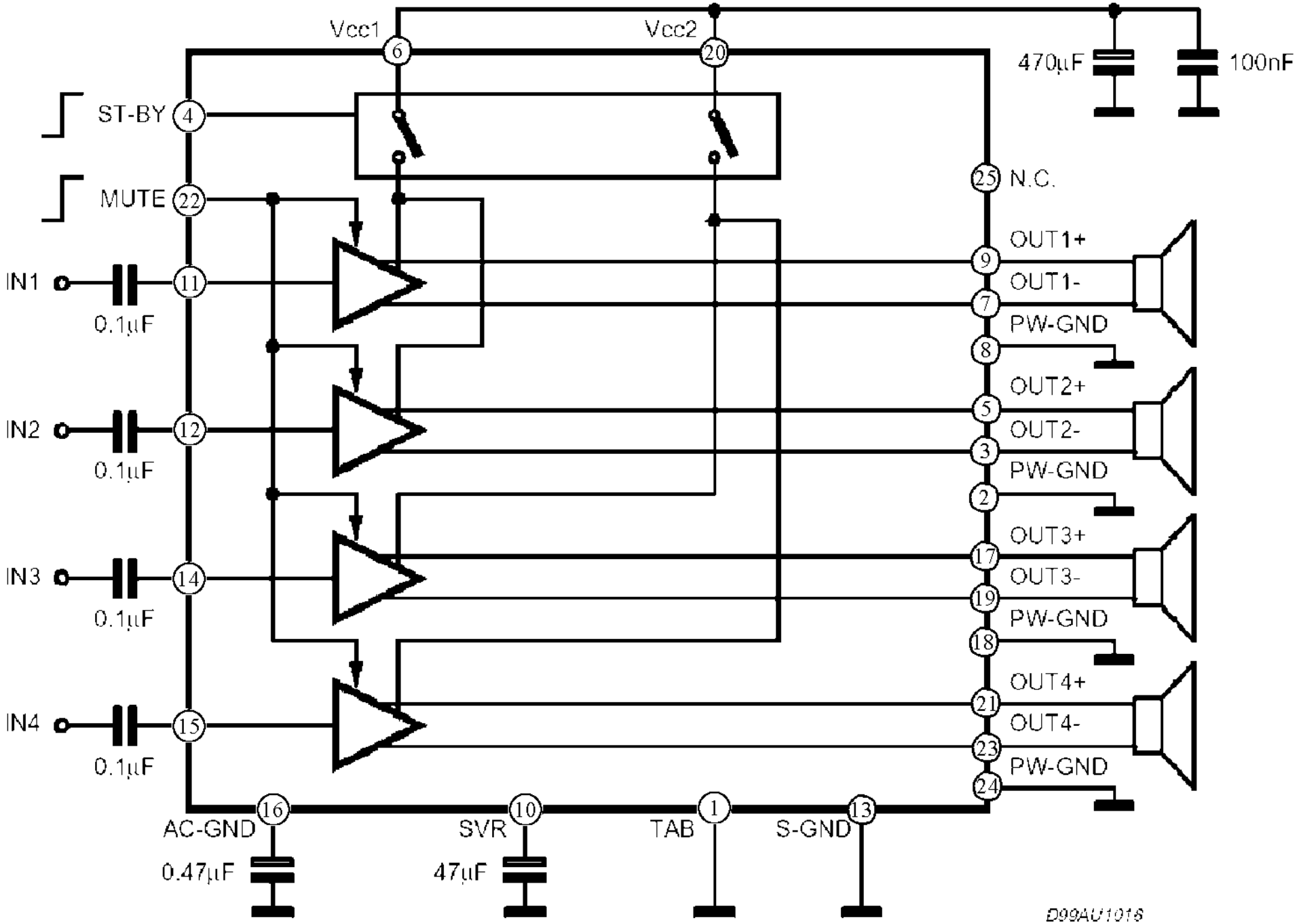
Vcc1
6
Vcc2
20
470µF
100nF
ST-BY
4
MUTE
22
25
N.C.
IN1
11
0.1µF
OUT1+
9
OUT1-
7
PW-GND
8
IN2
12
0.1µF
OUT2+
5
OUT2-
3
PW-GND
2
IN3
14
0.1µF
OUT3+
17
OUT3-
19
PW-GND
18
IN4
15
0.1µF
OUT4+
21
OUT4-
23
PW-GND
24
16
AC-GND
0.47µF
10
SVR
47µF
1
TAB
13
S-GND
D99AU1016

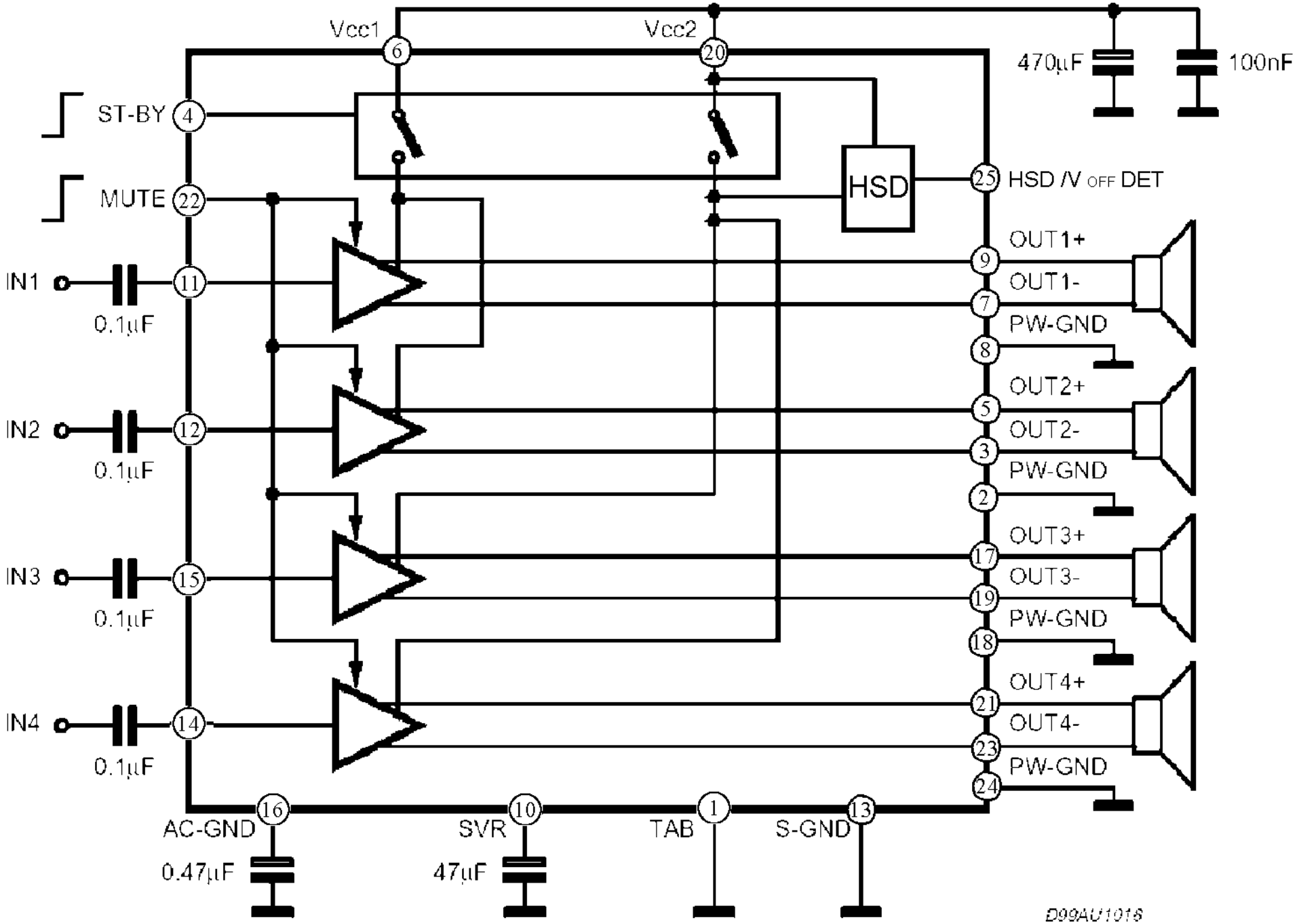
Vcc1
6
Vcc2
20
470µF
100nF
ST-BY
4
MUTE
22
HSD
25
HSD /V OFF DET
IN1
11
0.1µF
IN2
12
0.1µF
IN3
15
0.1µF
IN4
14
0.1µF
OUT1+
9
OUT1-
7
PW-GND
8
OUT2+
5
OUT2-
3
PW-GND
2
OUT3+
17
OUT3-
19
PW-GND
18
OUT4+
21
OUT4-
23
PW-GND
24
AC-GND
16
0.47µF
SVR
10
47µF
TAB
1
S-GND
13
D99AU1016

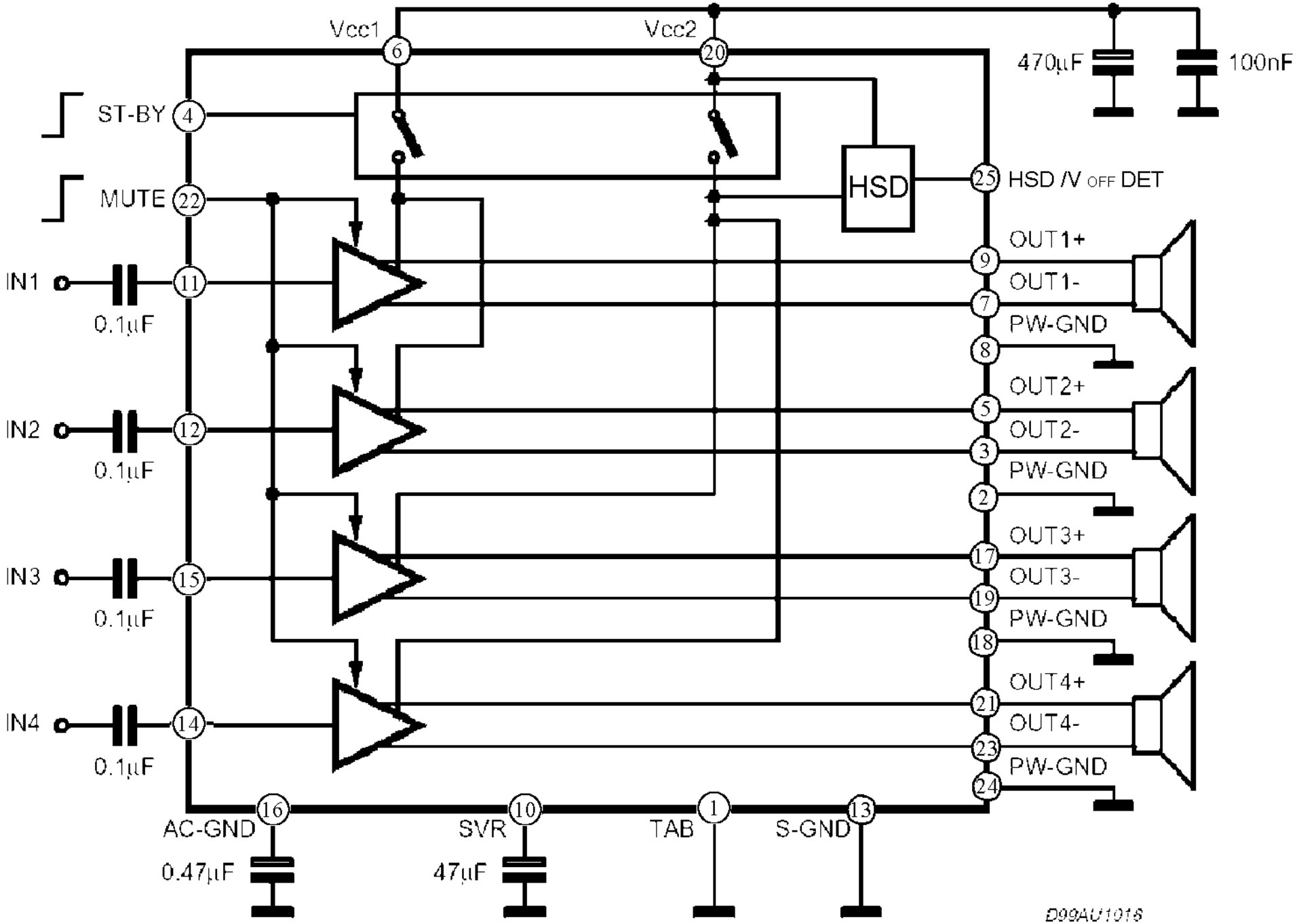
Vcc1
6
Vcc2
20
470µF
100nF
ST-BY
4
MUTE
22
HSD
25
HSD /V OFF DET
IN1
11
0.1µF
IN2
12
0.1µF
IN3
15
0.1µF
IN4
14
0.1µF
OUT1+
9
OUT1-
7
PW-GND
8
OUT2+
5
OUT2-
3
PW-GND
2
OUT3+
17
OUT3-
19
PW-GND
18
OUT4+
21
OUT4-
23
PW-GND
24
AC-GND
16
0.47µF
SVR
10
47µF
TAB
1
S-GND
13
D99AU1016

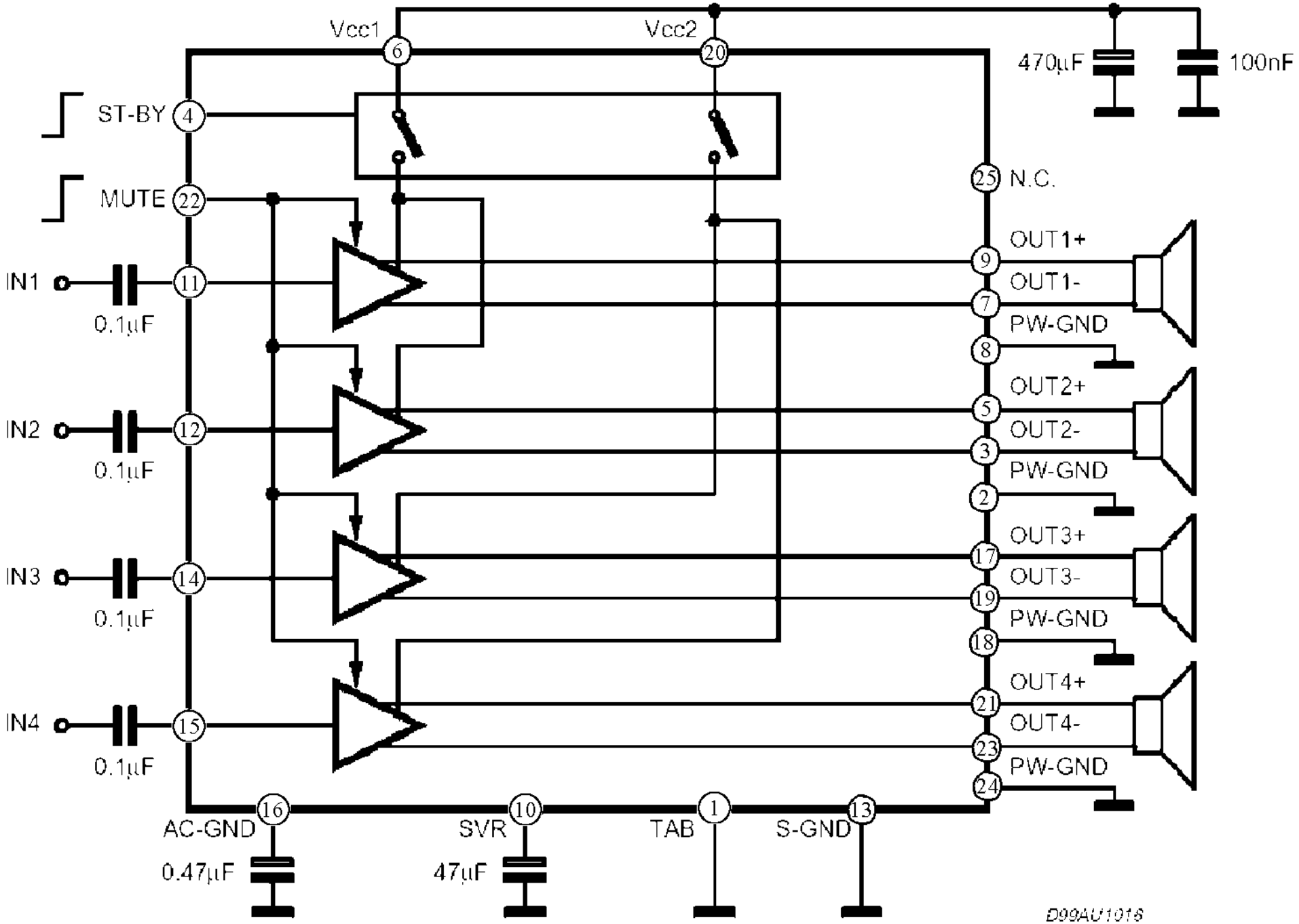
Vcc1
6
Vcc2
20
470µF
100nF
ST-BY
4
MUTE
22
25
N.C.
IN1
11
0.1µF
OUT1+
9
OUT1-
7
PW-GND
8
IN2
12
0.1µF
OUT2+
5
OUT2-
3
PW-GND
2
IN3
14
0.1µF
OUT3+
17
OUT3-
19
PW-GND
18
IN4
15
0.1µF
OUT4+
21
OUT4-
23
PW-GND
24
16
AC-GND
0.47µF
10
SVR
47µF
1
TAB
13
S-GND
D99AU1016

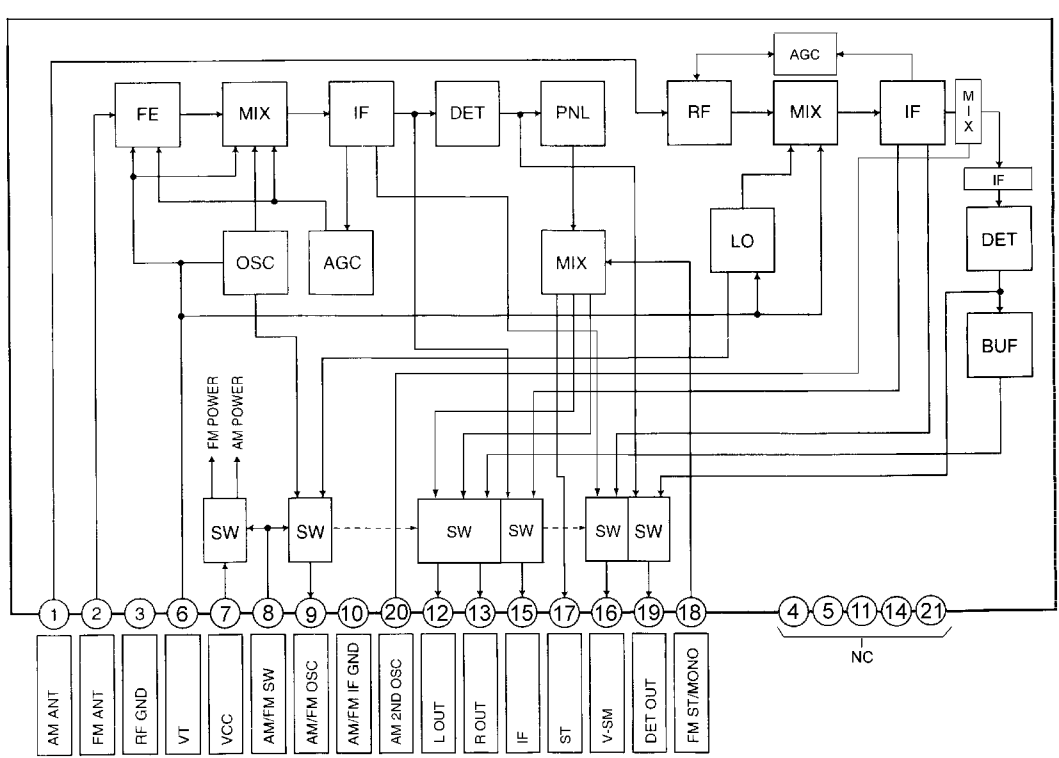
AGC
FE
MIX
IF
DET
PNL
RF
MIX
IF
MIX
IF
DET
BUF
LO
OSC
AGC
MIX
FM POWER
AM POWER
SW
SW
SW
SW
SW
SW
1
2
3
6
7
8
9
10
20
12
13
15
17
16
19
18
4
5
11
14
21
NC
AM ANT
FM ANT
RF GND
VT
VCC
AM/FM SW
AM/FM OSC
AM/FM IF GND
AM 2ND OSC
L OUT
R OUT
IF
ST
V-SM
DET OUT
FM ST/MONO

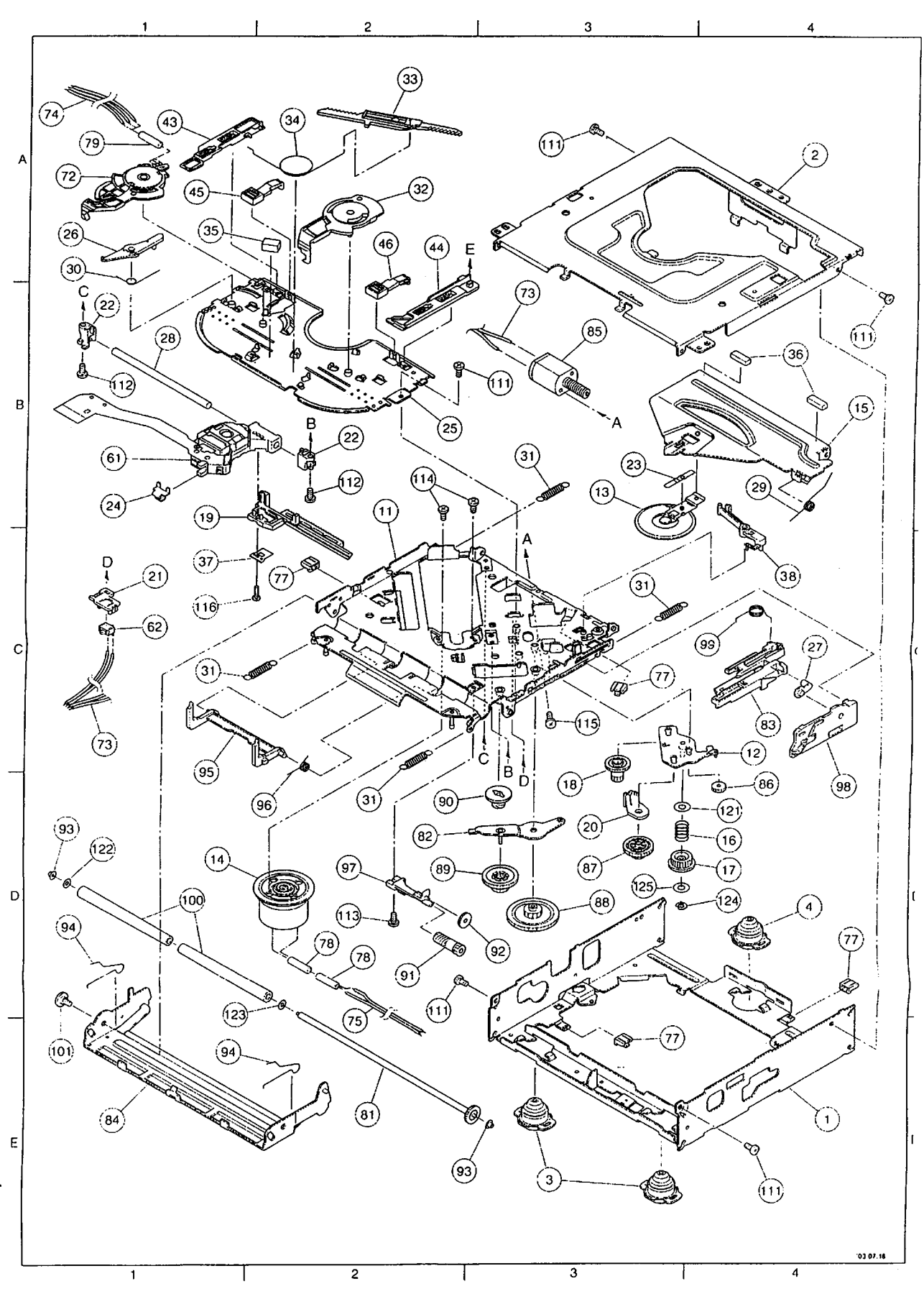
1
2
3
4
A
B
C
D
E
74
79
72
26
30
43
33
34
45
35
32
46
44
111
2
73
85
36
15
22
28
112
25
61
24
19
11
114
31
23
13
29
37
77
116
21
62
38
99
27
83
95
96
90
18
12
86
98
121
16
17
20
82
87
89
88
125
124
4
93
122
14
97
100
113
92
94
78
91
123
75
101
84
81
1
3

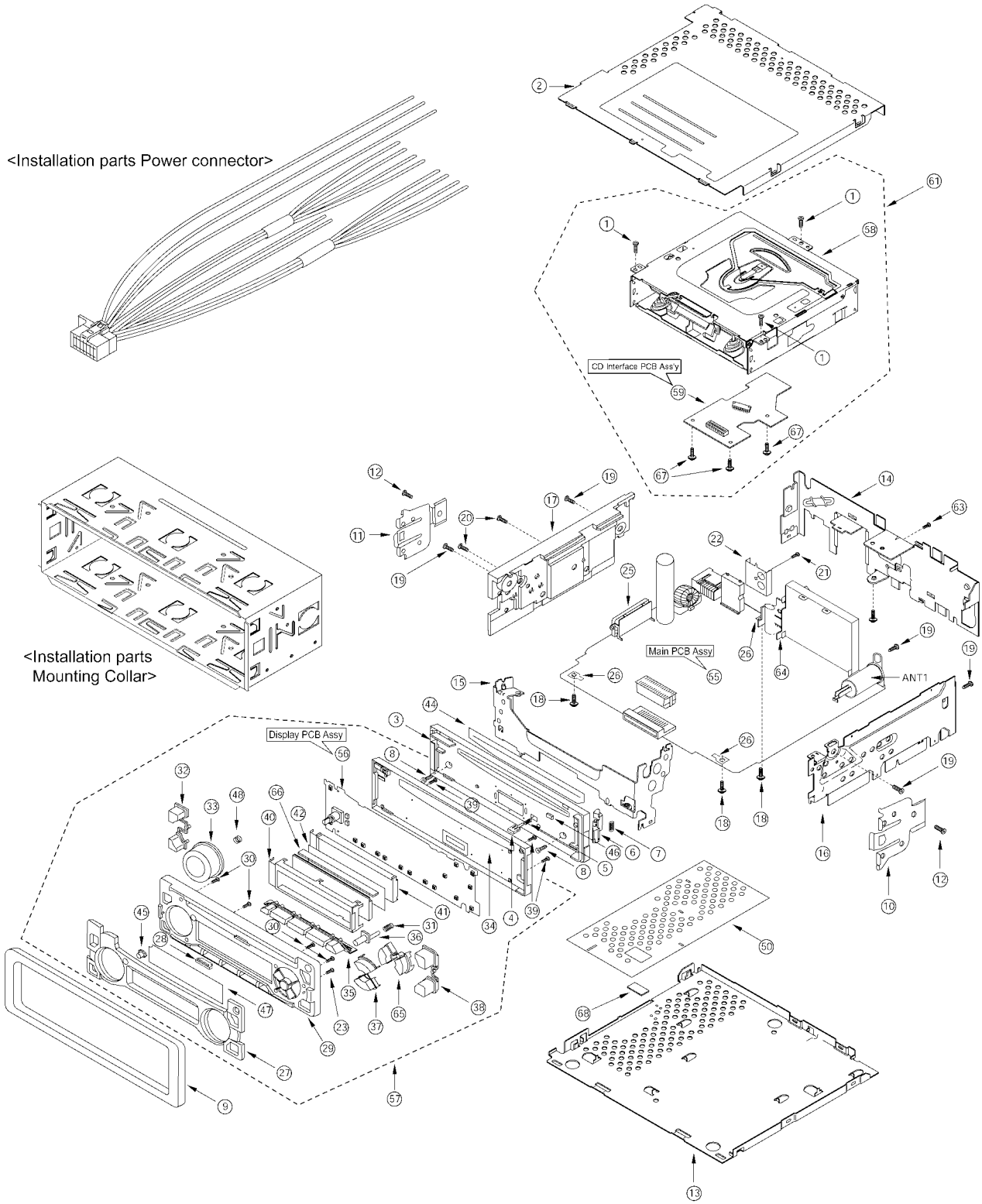
<Installation parts Power connector>
CD Interface PCB Ass'y
<Installation parts
Mounting Collar>
Main PCB Assy
ANT1
Display PCB Assy

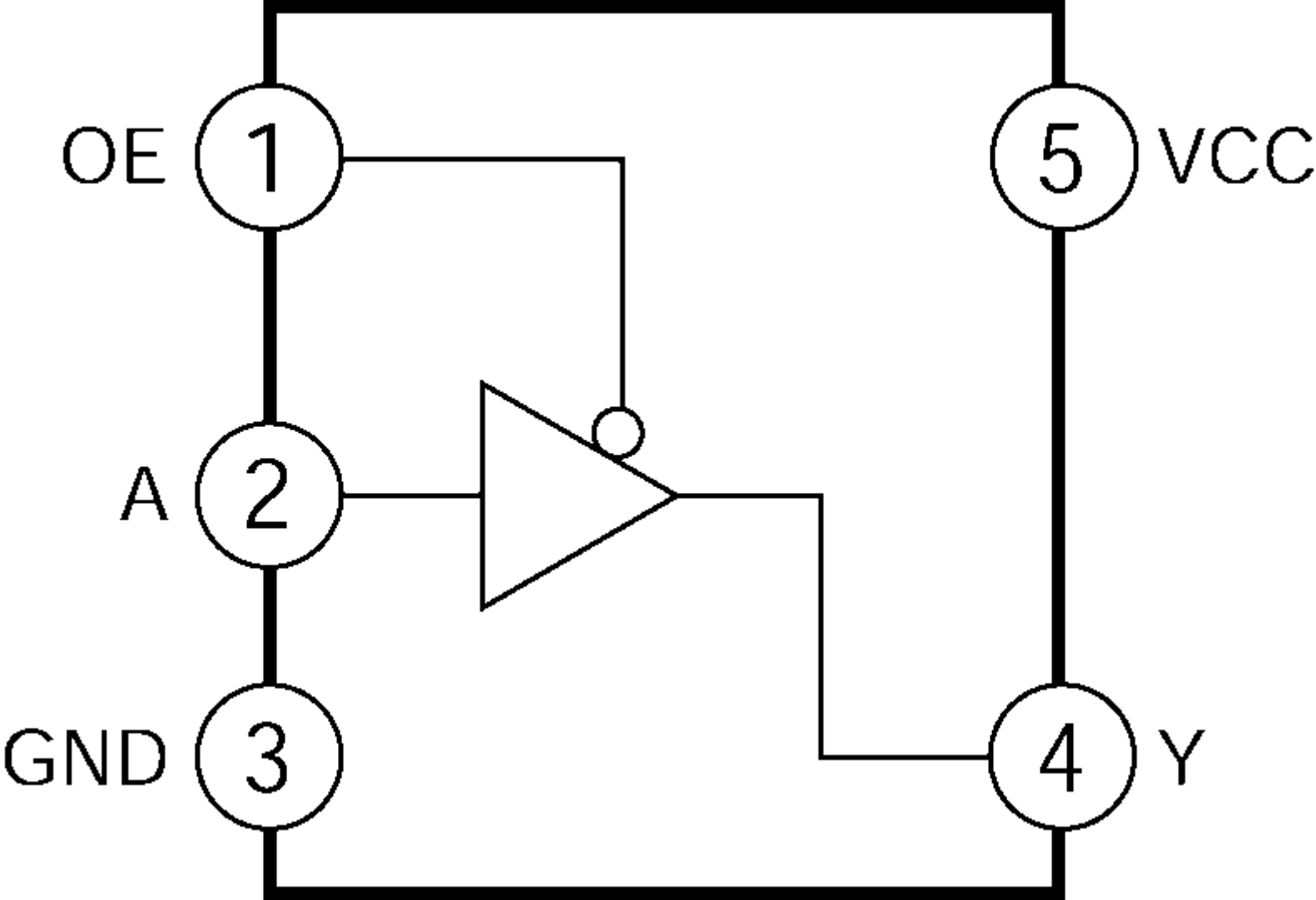
OE
1
5
VCC
A
2
GND
3
4
Y

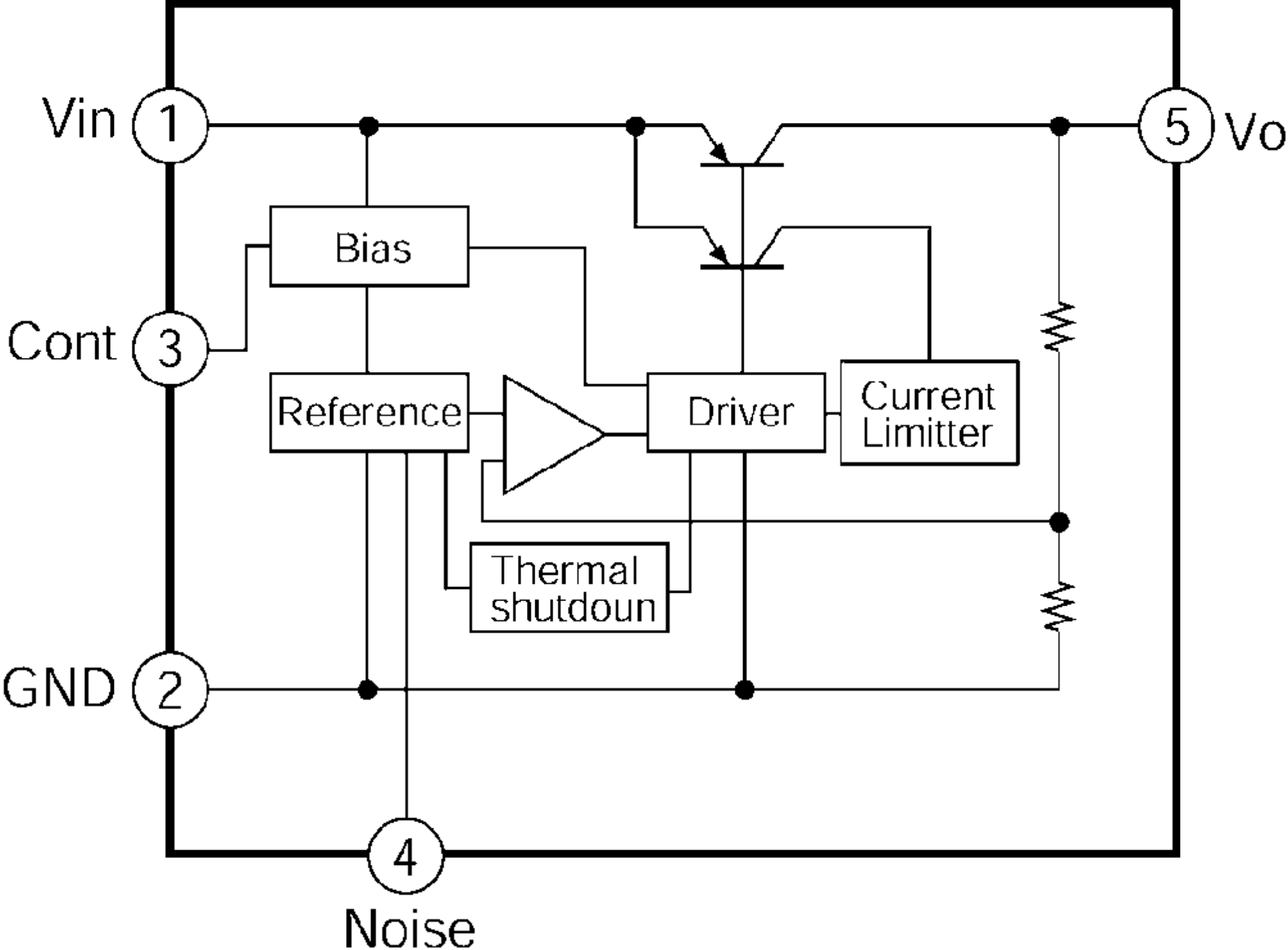
Vin
1
Cont
3
GND
2
4
Noise
5
Vo
Bias
Reference
Driver
Current
Limitter
Thermal
shutdoun

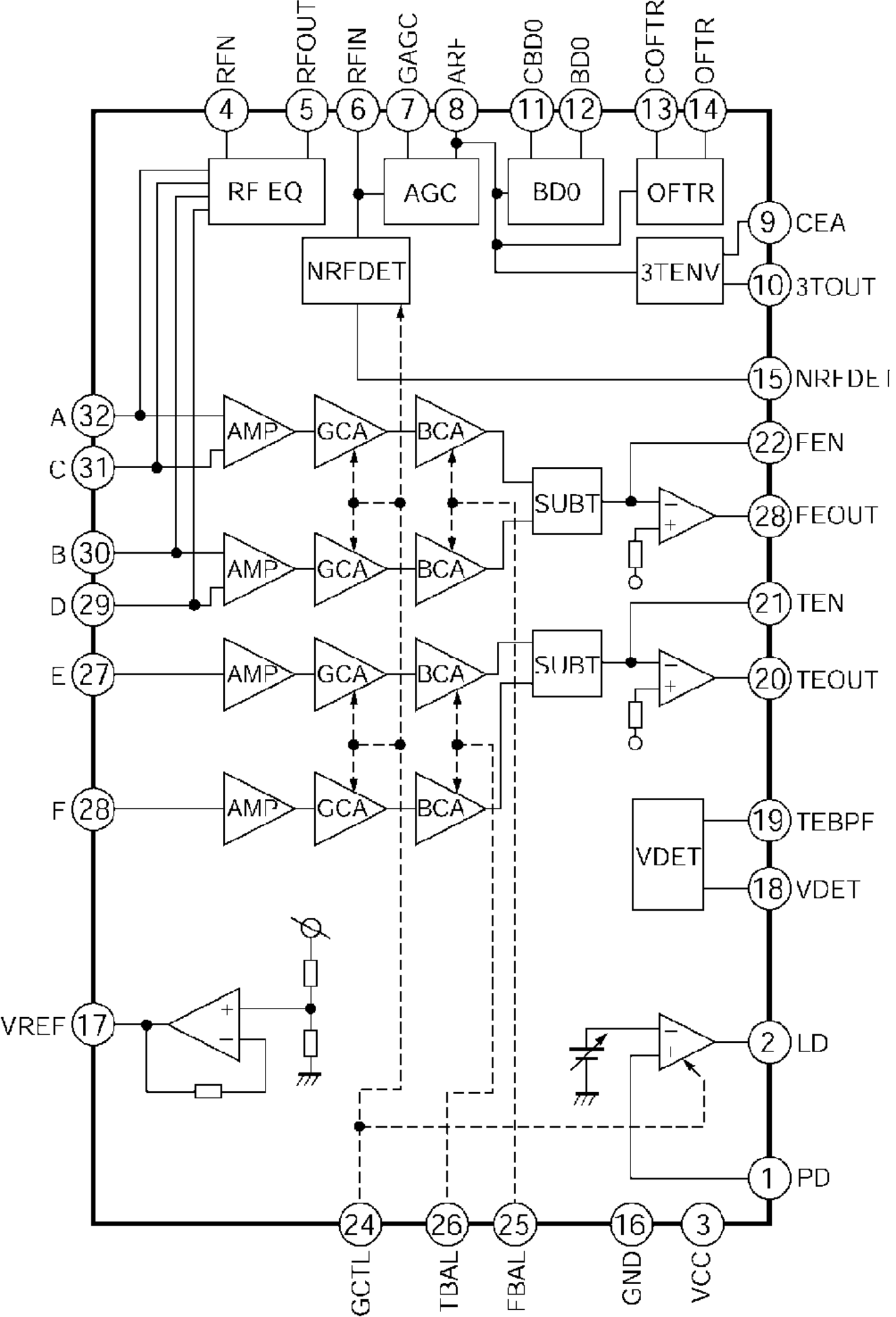
RFN
RFOUT
RFIN
GAGC
ARF
CBD0
BD0
COFTR
OFTR
4
5
6
7
8
11
12
13
14
RF EQ
AGC
BD0
OFTR
NRFDET
3TENV
9 CEA
10 3TOUT
15 NRFDET
A 32
C 31
B 30
D 29
E 27
F 28
AMP
GCA
BCA
SUBT
22 FEN
28 FEOUT
21 TEN
20 TEOUT
19 TEBPF
18 VDET
VDET
VREF 17
2 LD
1 PD
24
26
25
16
3
GCTL
TBAL
FBAL
GND
VCC

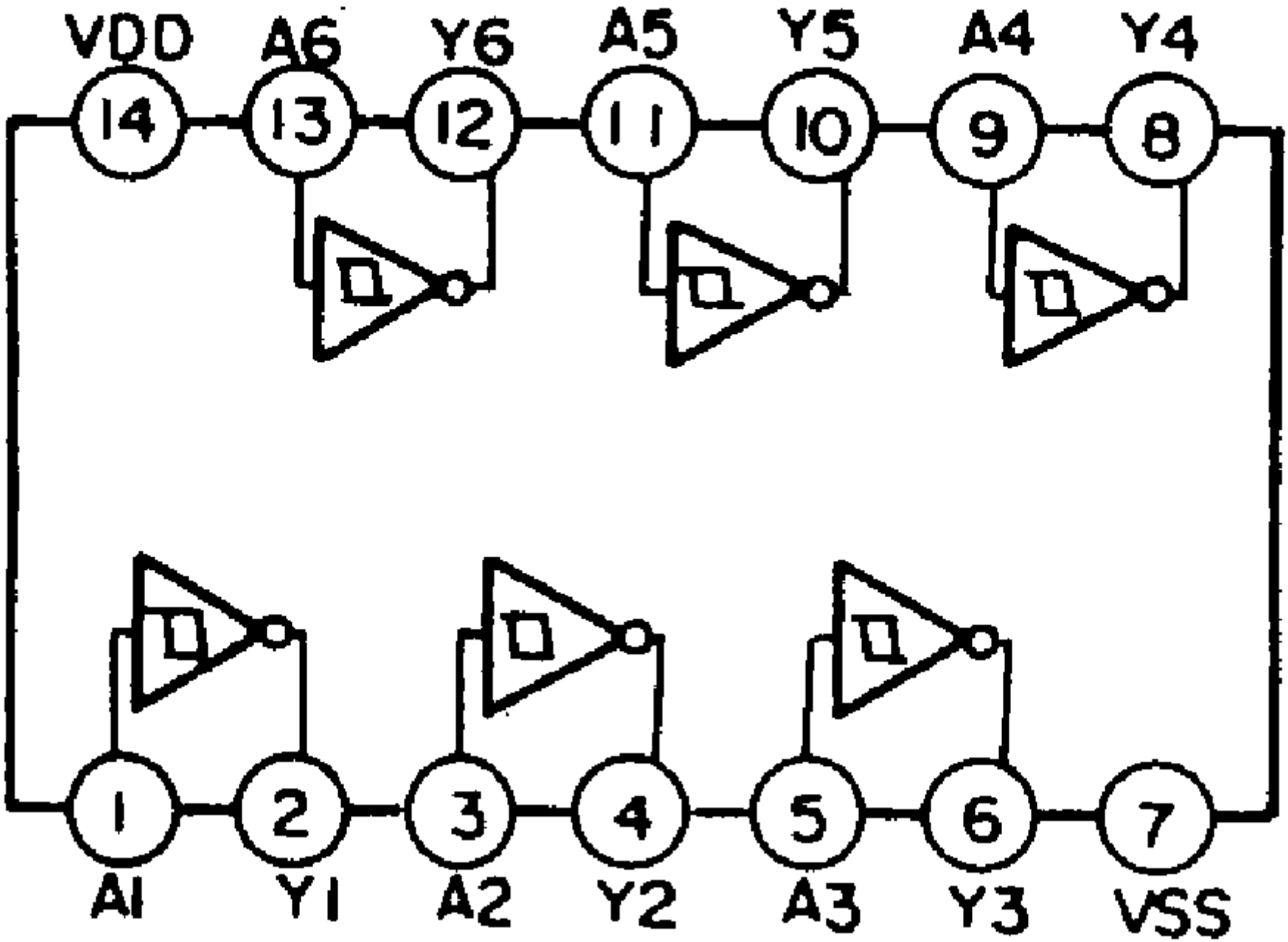
VDD
A6
Y6
A5
Y5
A4
Y4
14
13
12
11
10
9
8
1
2
3
4
5
6
7
A1
Y1
A2
Y2
A3
Y3
VSS

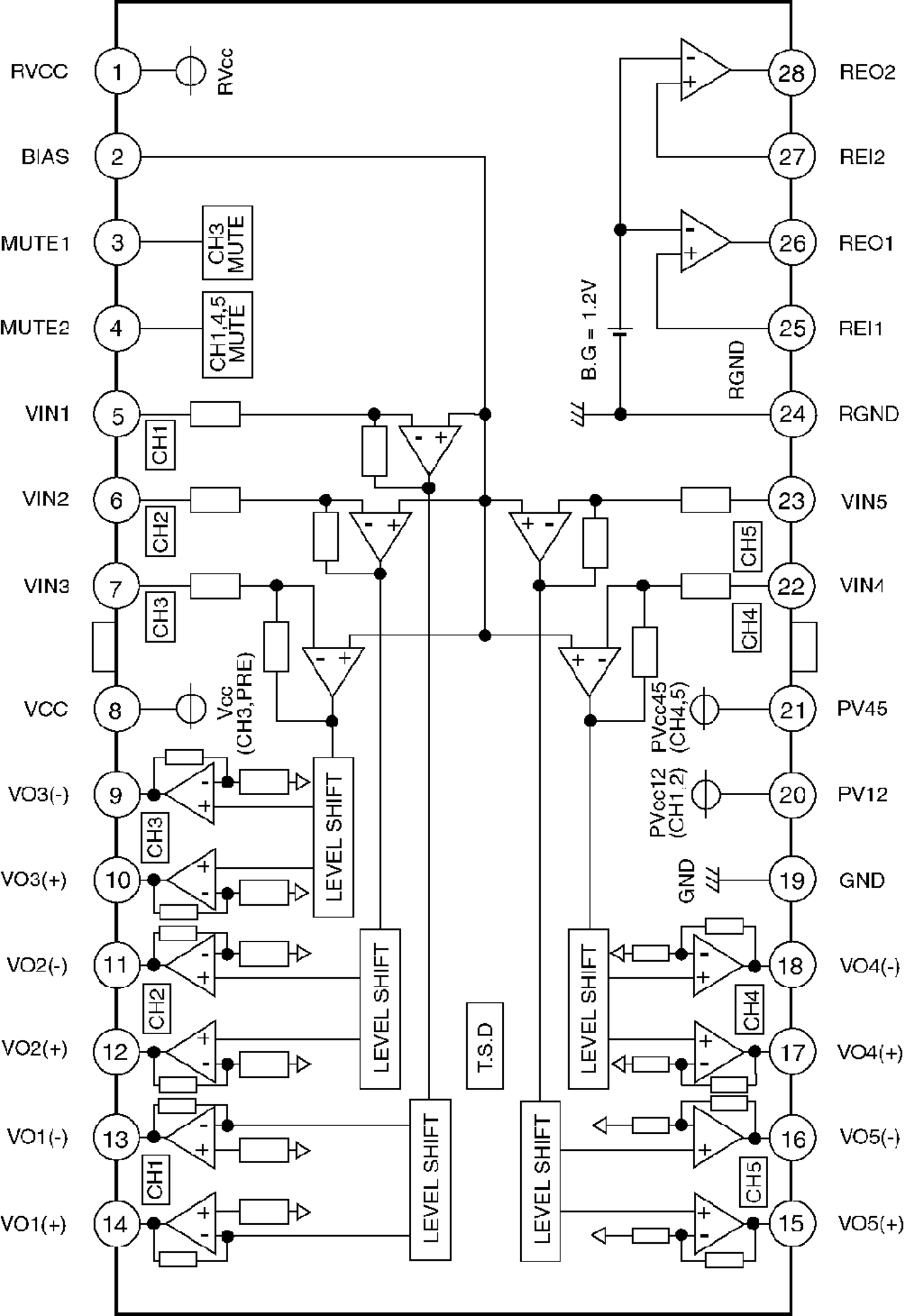
RVCC
1
RVcc
BIAS
2
MUTE1
3
CH3 MUTE
MUTE2
4
CH1,4,5 MUTE
VIN1
5
CH1
VIN2
6
CH2
VIN3
7
CH3
VCC
8
Vcc (CH3,PRE)
VO3(-)
9
CH3
VO3(+)
10
LEVEL SHIFT
VO2(-)
11
CH2
VO2(+)
12
LEVEL SHIFT
VO1(-)
13
CH1
VO1(+)
14
LEVEL SHIFT
T.S.D
LEVEL SHIFT
LEVEL SHIFT
B.G = 1.2V
RGND
28
REO2
27
REI2
26
REO1
25
REI1
24
RGND
23
VIN5
CH5
22
VIN4
CH4
21
PV45
PVcc45 (CH4,5)
20
PV12
PVcc12 (CH1,2)
GND
19
GND
18
VO4(-)
CH4
17
VO4(+)
16
VO5(-)
CH5
15
VO5(+)

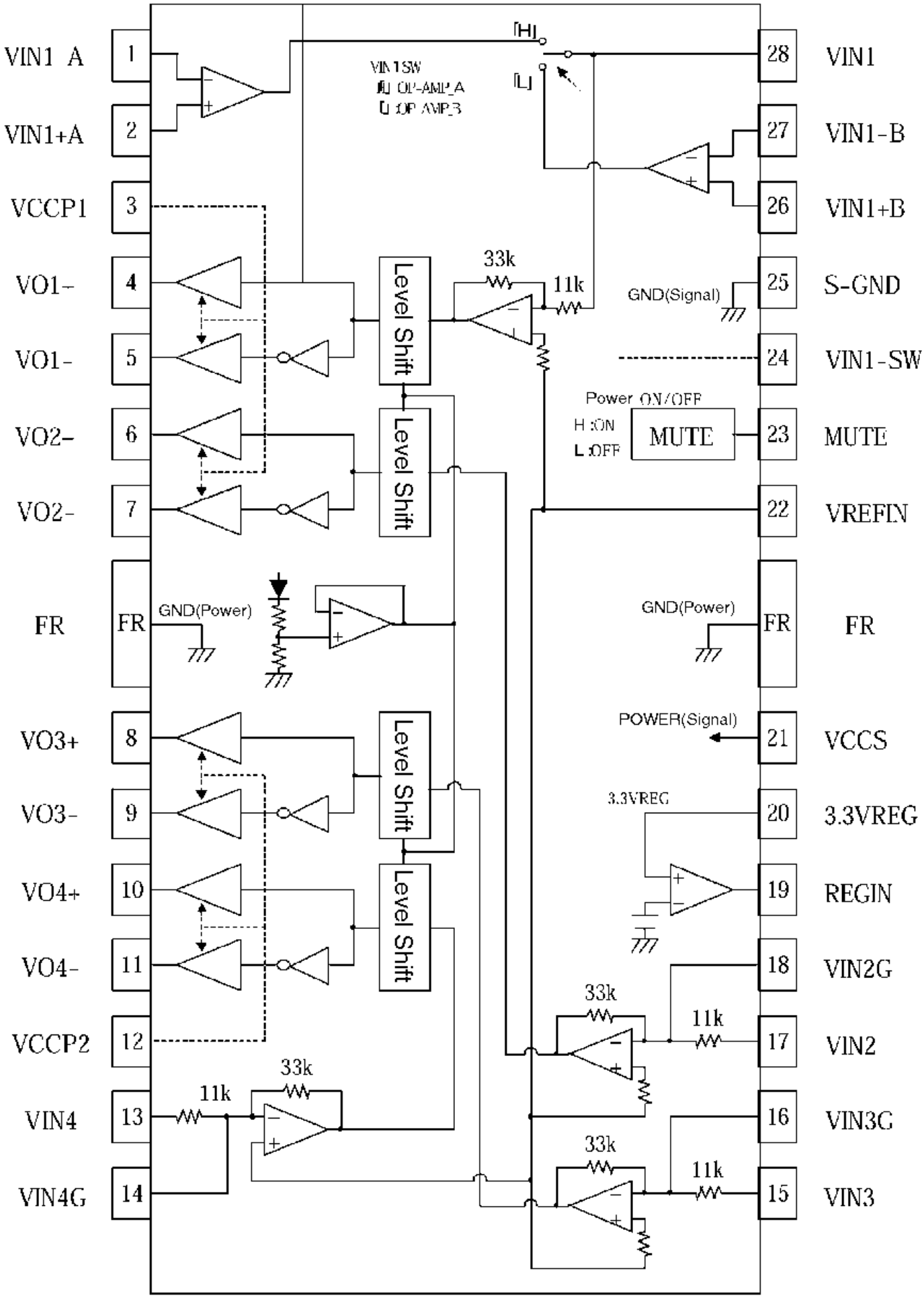
VIN1 A
VIN1+A
VCCP1
VO1-
VO1-
VO2-
VO2-
FR
VO3+
VO3-
VO4+
VO4-
VCCP2
VIN4
VIN4G
1
2
3
4
5
6
7
FR
8
9
10
11
12
13
14
28
27
26
25
24
23
22
FR
21
20
19
18
17
16
15
VIN1
VIN1-B
VIN1+B
S-GND
VIN1-SW
MUTE
VREFIN
FR
VCCS
3.3VREG
REGIN
VIN2G
VIN2
VIN3G
VIN3
[H]
[L]
VIN1SW
[H] OP-AMP_A
[L] OP-AMP_B
Level Shift
Level Shift
Level Shift
Level Shift
33k
11k
GND(Signal)
Power ON/OFF
H :ON
L :OFF
MUTE
GND(Power)
GND(Power)
POWER(Signal)
3.3VREG
33k
11k
33k
11k
33k
11k

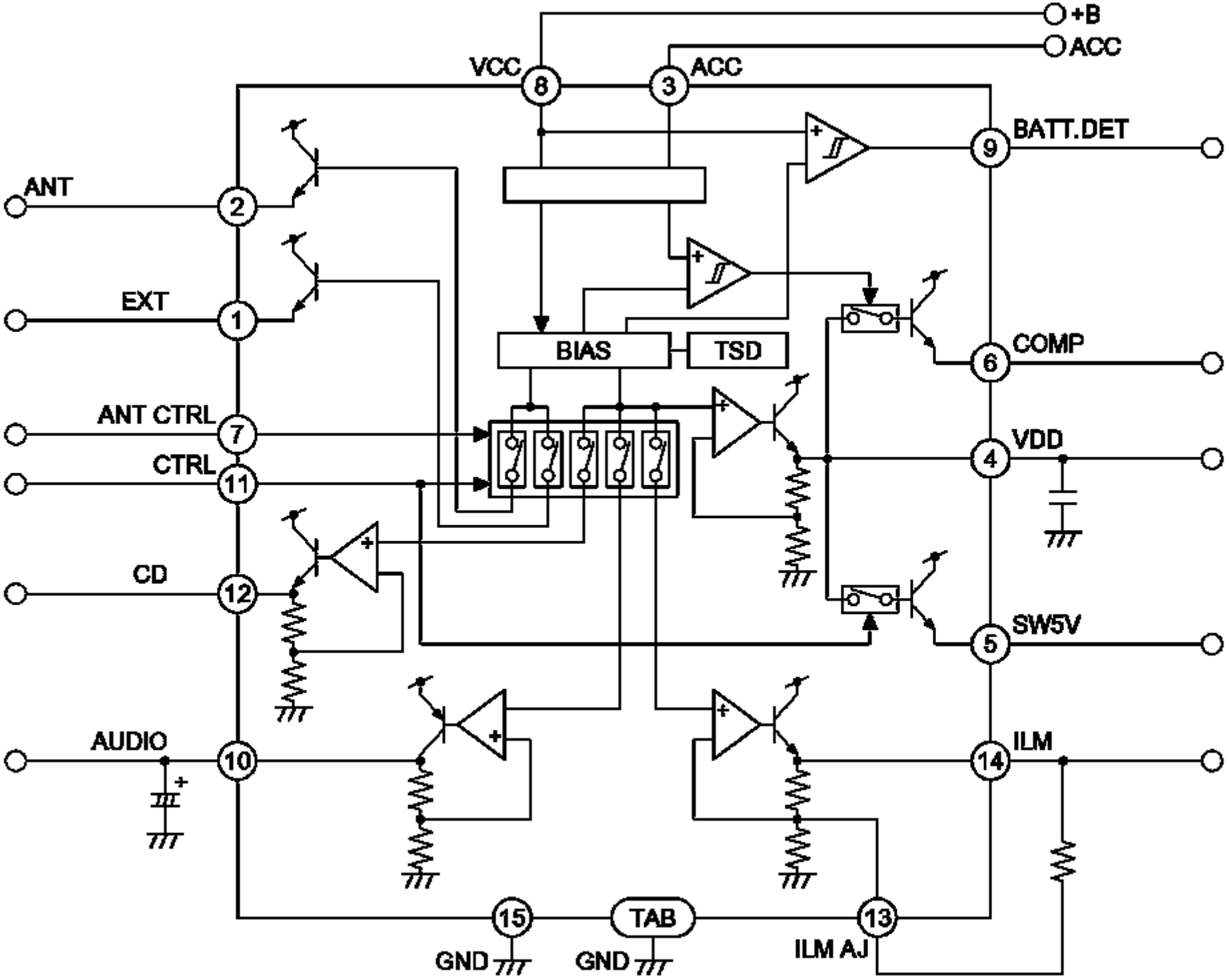
+B
ACC
VCC
8
3
ACC
BATT.DET
9
ANT
2
EXT
1
BIAS
TSD
COMP
6
ANT CTRL
7
CTRL
11
VDD
4
CD
12
SW5V
5
AUDIO
10
ILM
14
15
TAB
13
GND
GND
ILM AJ

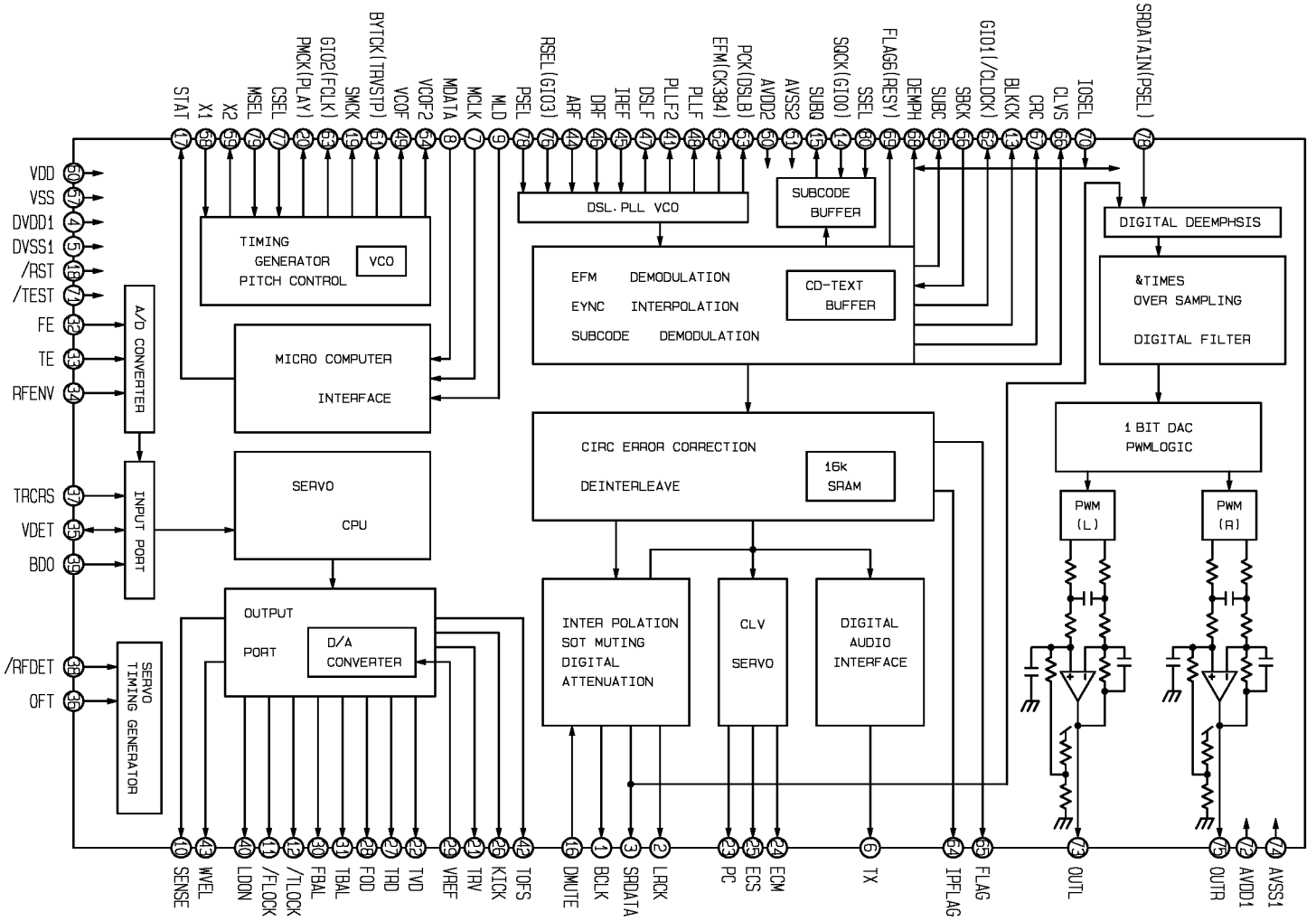
STAT 77
X1 28
X2 29
MSEL 78
CSEL 77
PMCK(PLAY) 20
GIO2(FCLK) 21
SMCK 19
BYTCK(TRVSTP) 31
VCOF 45
VCOF2 44
MDATA 8
MCLK 7
MLD 9
PSEL 78
RSEL(GIO3) 76
ARF 14
DRF 46
IREF 45
DSLF 47
PLLF2 41
PLLF 48
EFM(CK384) 42
PCK(DSLB) 43
AVDD2 30
AVSS2 31
SUBQ 15
SQCK(GIO0) 17
SSEL 80
FLAG6(RESY) 59
DEMPH 58
SUBC 55
SBCK 56
BLKCK 13
CRC 57
CLVS 58
IOSEL 10
SRDATAIN(PSEL) 78
VDD 30
VSS 31
DVDD1 4
DVSS1 5
/RST 16
/TEST 17
FE 32
TE 33
RFENV 34
TRCRS 37
VDET 35
BDO 36
/RFDET 38
OFT 39
TIMING GENERATOR PITCH CONTROL
VCO
DSL. PLL VCO
SUBCODE BUFFER
DIGITAL DEEMPHSIS
EFM DEMODULATION
EYNC INTERPOLATION
SUBCODE DEMODULATION
CD-TEXT BUFFER
&TIMES OVER SAMPLING
DIGITAL FILTER
A/D CONVERTER
MICRO COMPUTER
INTERFACE
CIRC ERROR CORRECTION
DEINTERLEAVE
16k SRAM
1 BIT DAC PWMLOGIC
PWM (L)
PWM (R)
INPUT PORT
SERVO
CPU
OUTPUT PORT
D/A CONVERTER
INTER POLATION SOT MUTING DIGITAL ATTENUATION
CLV SERVO
DIGITAL AUDIO INTERFACE
SERVO TIMING GENERATOR
SENSE 10
WVEL 13
LDON 40
/FLOCK 11
/TLOCK 12
FBAL 30
TBAL 31
FOD 28
TRD 27
TVD 22
VREF 26
TRV 23
KICK 25
TOFS 42
DMUTE 16
BCLK 1
SRDATA 3
LRCK 2
PC 23
ECS 25
ECM 24
TX 6
IPFLAG 64
FLAG 65
OUTL 73
OUTR 75
AVDD1 72
AVSS1 74

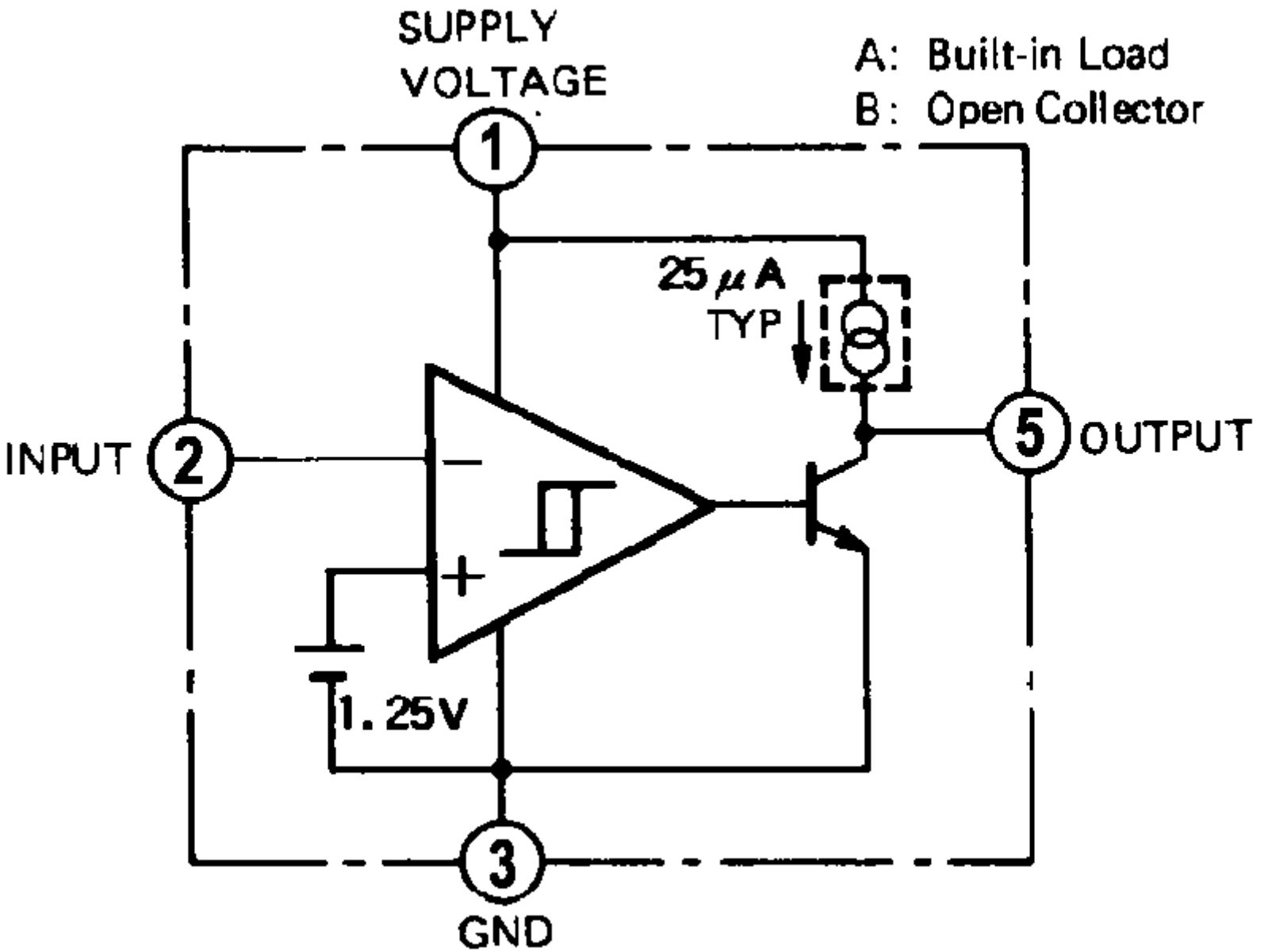
SUPPLY
VOLTAGE
A: Built-in Load
B: Open Collector
1
25μA
TYP
INPUT
2
5
OUTPUT
1.25V
3
GND

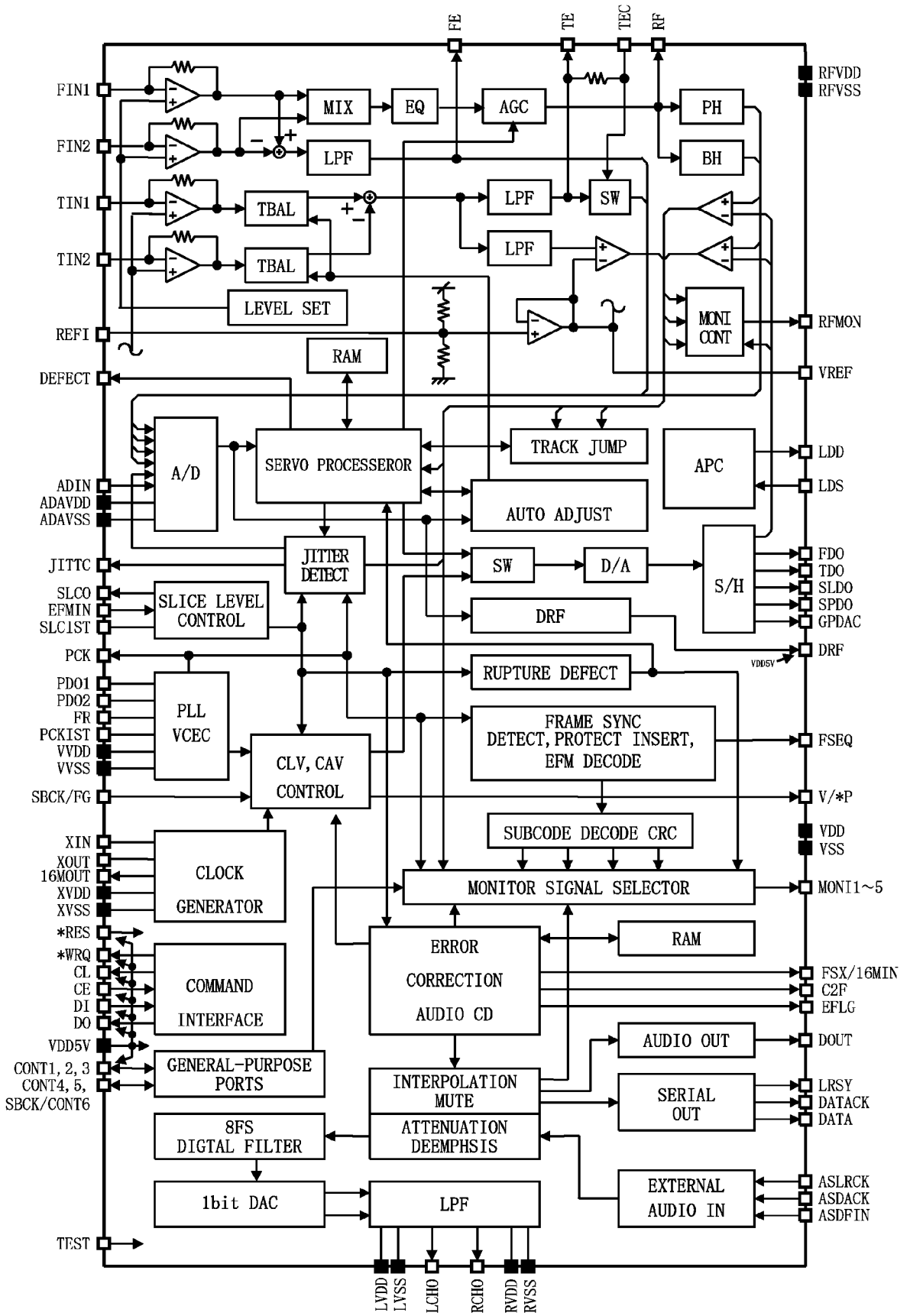
FE
TE
TEC
RF
RFVDD
RFVSS
FIN1
FIN2
TIN1
TIN2
REFI
DEFECT
ADIN
ADAVDD
ADAVSS
JITTC
SLCO
EFMIN
SLC1ST
PCK
PDO1
PDO2
FR
PCKIST
VVDD
VVSS
SBCK/FG
XIN
XOUT
16MOUT
XVDD
XVSS
*RES
*WRQ
CL
CE
DI
DO
VDD5V
CONT1, 2, 3
CONT4, 5,
SBCK/CONT6
TEST
MIX
EQ
AGC
PH
BH
LPF
TBAL
SW
LEVEL SET
MONI CONT
RAM
A/D
SERVO PROCESSEROR
TRACK JUMP
APC
AUTO ADJUST
JITTER DETECT
D/A
S/H
SLICE LEVEL CONTROL
DRF
RUPTURE DEFECT
PLL VCEC
FRAME SYNC DETECT, PROTECT INSERT, EFM DECODE
CLV, CAV CONTROL
SUBCODE DECODE CRC
CLOCK GENERATOR
MONITOR SIGNAL SELECTOR
ERROR CORRECTION AUDIO CD
COMMAND INTERFACE
GENERAL-PURPOSE PORTS
INTERPOLATION MUTE
ATTENUATION DEEMPHSIS
8FS DIGTAL FILTER
1bit DAC
AUDIO OUT
SERIAL OUT
EXTERNAL AUDIO IN
RFMON
VREF
LDD
LDS
FDO
TDO
SLDO
SPDO
GPDAC
DRF
VDD5V
FSEQ
V/*P
VDD
VSS
MONI1~5
FSX/16MIN
C2F
EFLG
DOUT
LRSY
DATACK
DATA
ASLRCK
ASDACK
ASDFIN
LVDD
LVSS
LCHO
RCHO
RVDD
RVSS

CAUTION:

This product utilizes a laser diode with the unit turned "on", laser radiation is emitted from the pickup lens.

Laser radiation from the pickup lens is safety level, but be sure the followings:

1. Do not disassemble the optical pickup unit, since radiation from exposed laser diode is dangerous.
2. Do not adjust the variable resistor on the pickup unit. It was already adjusted.
3. Do not look at the focus lens using optical instruments.
4. Recommend not to look at pickup lens for a long time.

DANGER! Invisible laser radiation when open. Avoid direct exposure to beam.

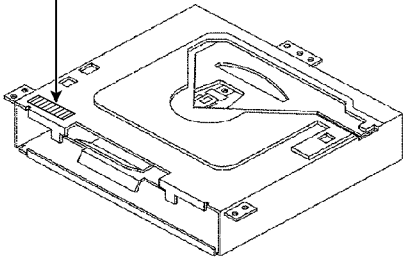

Deck Ass'y (Upper Side)

Caution

This Product utilizes a laser.

Use of controls or adjustments or performance of procedures other than those specified herein may result in hazardous radiation exposure.

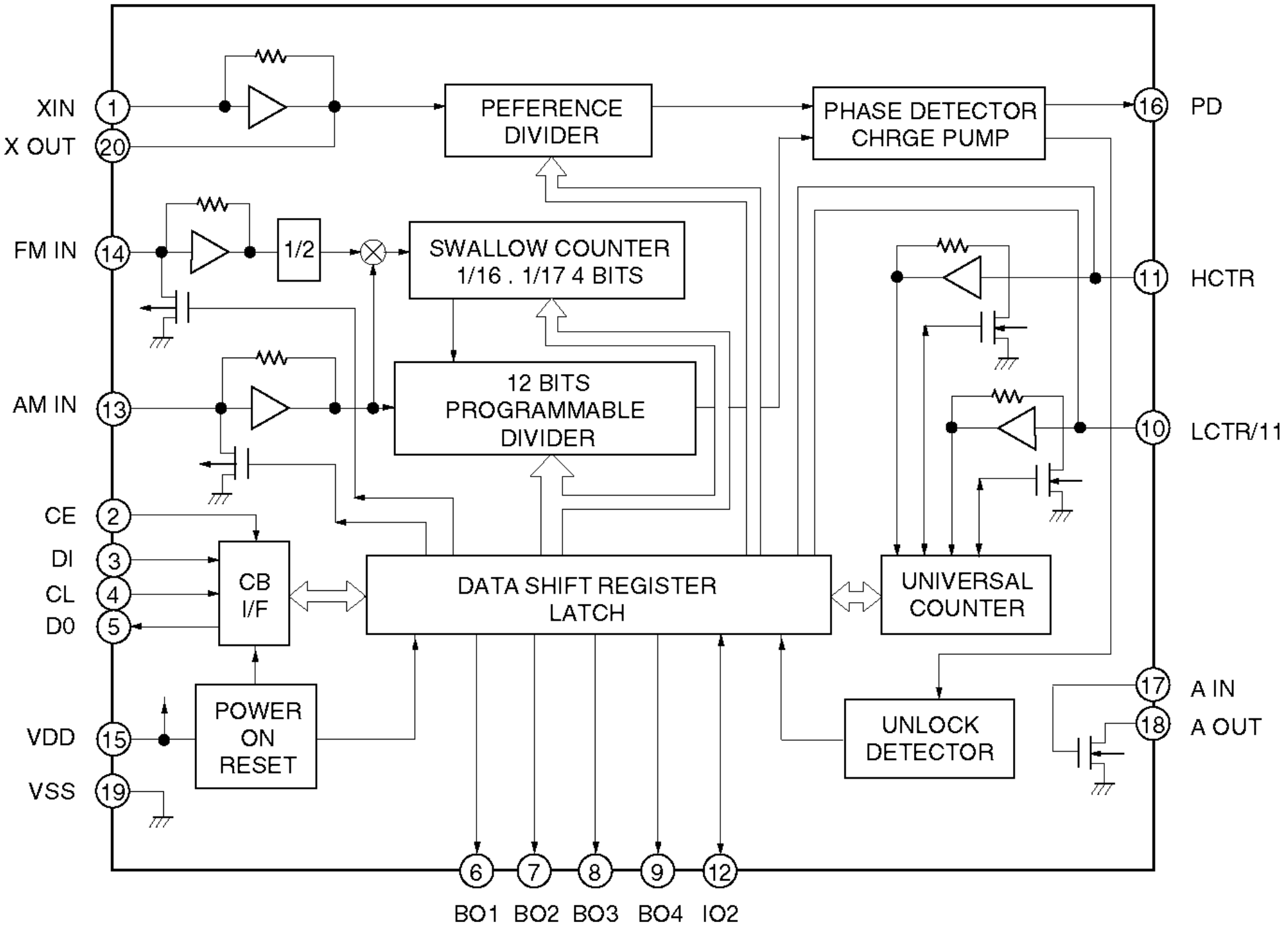
XIN
X OUT
FM IN
AM IN
CE
DI
CL
D0
VDD
VSS
PEFERENCE DIVIDER
PHASE DETECTOR CHRGE PUMP
PD
1/2
SWALLOW COUNTER 1/16 . 1/17 4 BITS
12 BITS PROGRAMMABLE DIVIDER
HCTR
LCTR/11
CB I/F
DATA SHIFT REGISTER LATCH
UNIVERSAL COUNTER
POWER ON RESET
UNLOCK DETECTOR
A IN
A OUT
BO1
BO2
BO3
BO4
IO2

CAUTION:

This product utilizes a laser diode with the unit turned "on", laser radiation is emitted from the pickup lens.

Laser radiation from the pickup lens is safety level, but be sure the followings:

1. Do not disassemble the optical pickup unit, since radiation from exposed laser diode is dangerous.
2. Do not adjust the variable resistor on the pickup unit. It was already adjusted.
3. Do not look at the focus lens using optical instruments.
4. Recommend not to look at pickup lens for a long time.

DANGER! Invisible laser radiation when open. Avold direct exposure to beam.

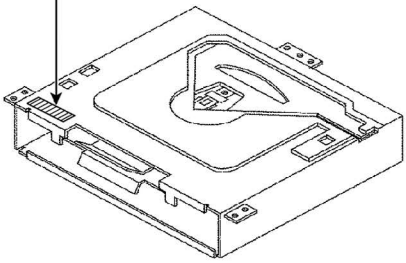

Deck Ass'y (Upper Side)

Caution

This Product utilizes a laser.

Use of controls or adjustments or performance of procedures other than those specified herein may result in hazardous radiation exposure.

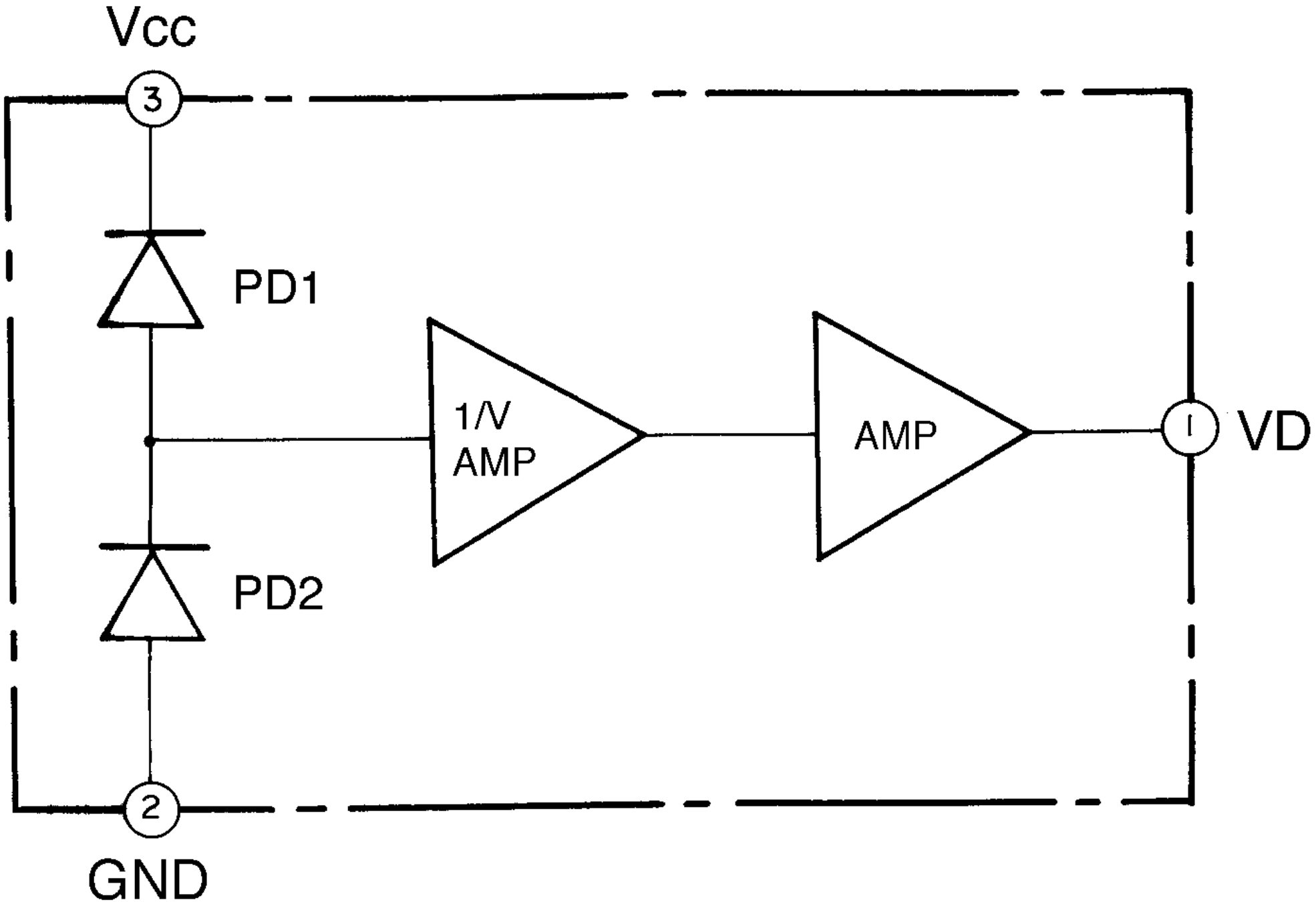
Vcc
3
PD1
1/V
AMP
AMP
1
VD
PD2
2
GND

Note:

1. Be sure to make your orders of replacement parts according to this list.
2. Important safty notice: Component, indentified by ⚠ mark have special characteristics important for safety. when replacing any of these components, use only manufacturer's specified parts.
3. Location keys in the remarks column indicates the general location of the parts shown in the exploded drawing. as in a load map.
4. The marking (RTL) indicates that Retention Time is limited for this item. After the discontinuation of assembly in production, the item will continue to be availability is dependent on the type of assembly, and in accordance with the laws governing part and product retention. Aft the end of this period, the assembly will no longer be available.
5. "T" marks in remarks colum are indicated supply parts of TAMACO.

- Order intake period is basically six months after the first shipment

Note:

1. Be sure to make your orders of replacement parts according to this list.
2. Important safty notice: Component, indentified by ⚠ mark have special characteristics important for safety. when replacing any of these components, use only manufacturer's specified parts.
3. Location keys in the remarks column indicates the general location of the parts shown in the exploded drawing. as in a load map.
4. The marking (RTL) indicates that Retention Time is limited for this item. After the discontinuation of assembly in production, the item will continue to be availability is dependent on the type of assembly, and in accordance with the laws governing part and product retention. Aft the end of this period, the assembly will no longer be available.
5. "T" marks in remarks colum are indicated supply parts of TAMACO.

- Order intake period is basically six months after the first shipment

E-4C264(2/2)

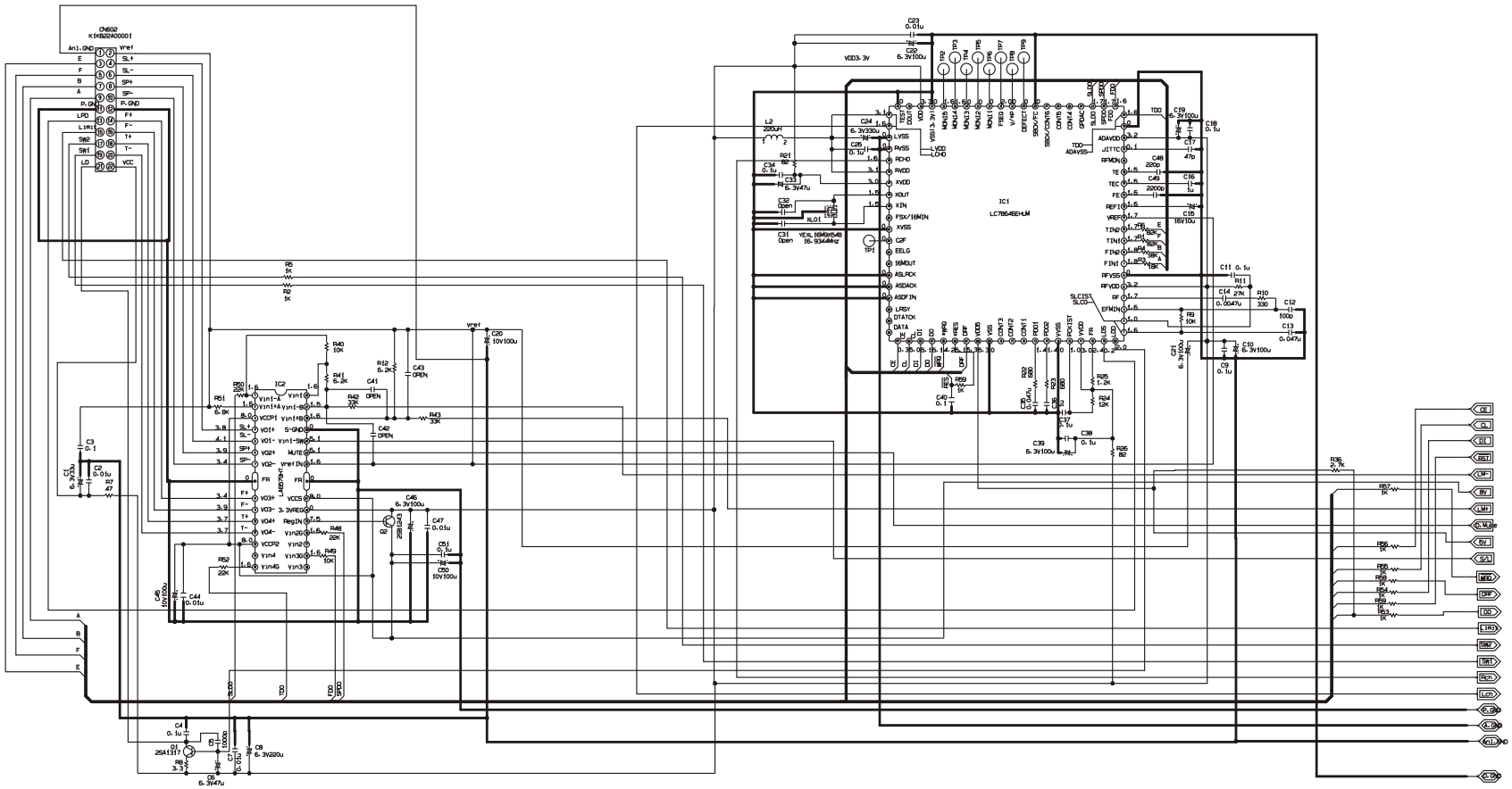
CN602
K1KB20A00001
IC1
LC78646E4LM
IC2
LB1670M
VDD3.3V
VDD1.3V
YEXL16M20x54B
16.9344MHz
Q1
2SA1317
Q2
2SB1243

E-4C265

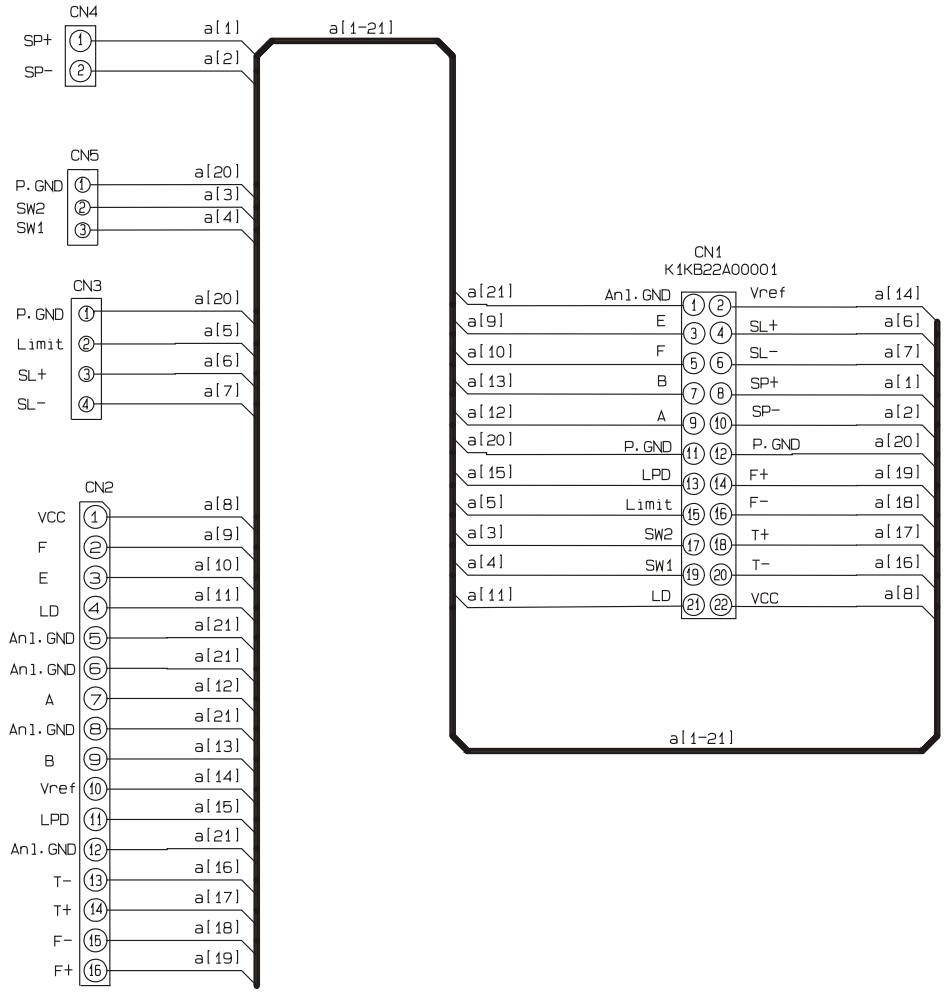
CN4
SP+ 1 a[1]
SP- 2 a[2]
CN5
P.GND 1 a[20]
SW2 2 a[3]
SW1 3 a[4]
CN3
P.GND 1 a[20]
Limit 2 a[5]
SL+ 3 a[6]
SL- 4 a[7]
CN2
VCC 1 a[8]
F 2 a[9]
E 3 a[10]
LD 4 a[11]
Anl.GND 5 a[21]
Anl.GND 6 a[21]
A 7 a[12]
Anl.GND 8 a[21]
B 9 a[13]
Vref 10 a[14]
LPD 11 a[15]
Anl.GND 12 a[21]
T- 13 a[16]
T+ 14 a[17]
F- 15 a[18]
F+ 16 a[19]
a[1-21]
CN1
K1KB22A00001
a[21] Anl.GND 1 2 Vref a[14]
a[9] E 3 4 SL+ a[6]
a[10] F 5 6 SL- a[7]
a[13] B 7 8 SP+ a[1]
a[12] A 9 10 SP- a[2]
a[20] P.GND 11 12 P.GND a[20]
a[15] LPD 13 14 F+ a[19]
a[5] Limit 15 16 F- a[18]
a[3] SW2 17 18 T+ a[17]
a[4] SW1 19 20 T- a[16]
a[11] LD 21 22 VCC a[8]
a[1-21]

E-4C266

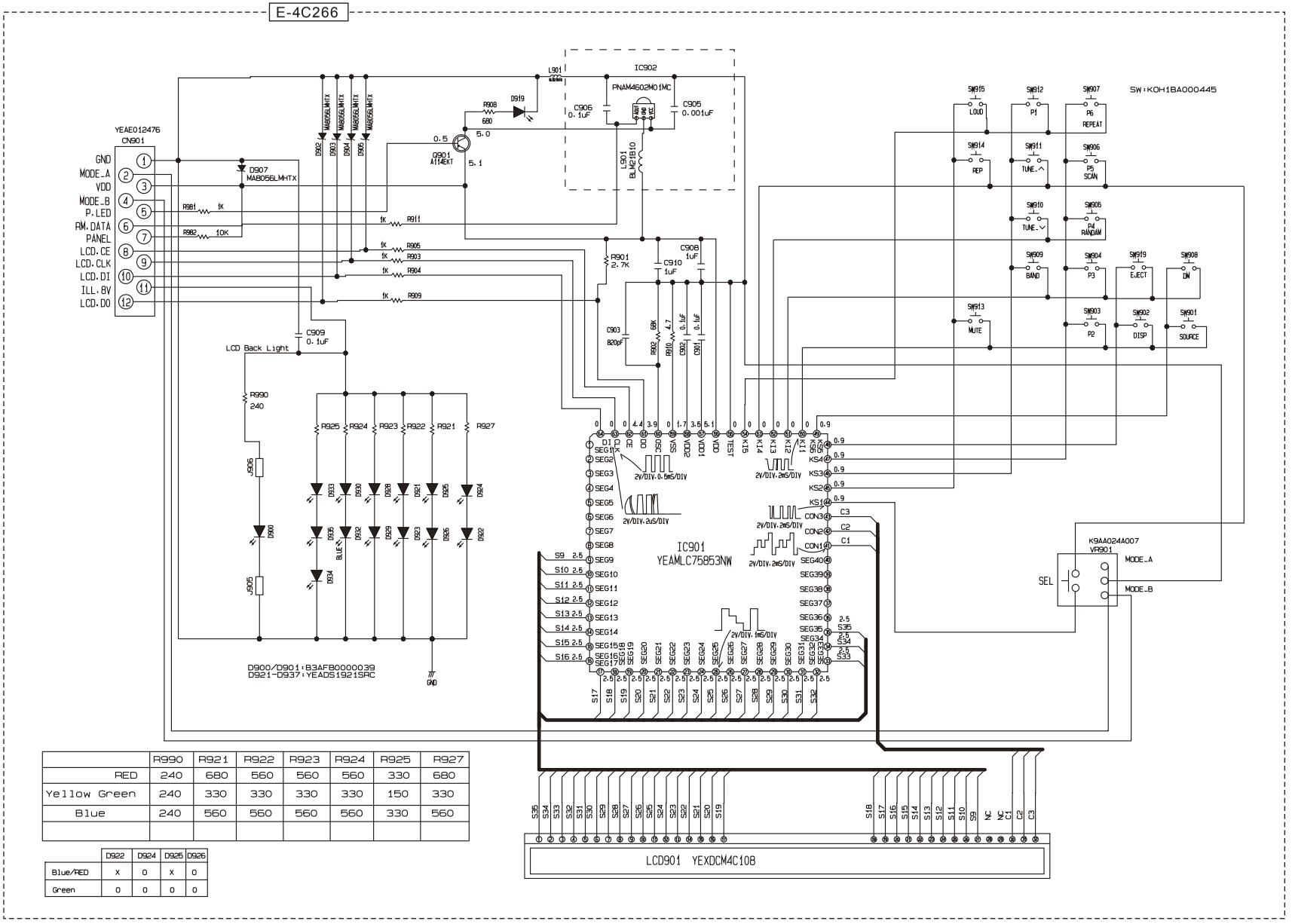

	R990	R921	R922	R923	R924	R925	R927
RED	240	680	560	560	560	330	680
Yellow Green	240	330	330	330	330	150	330
Blue	240	560	560	560	560	330	560

	D922	D924	D925	D926
Blue/RED	X	O	X	O
Green	O	O	O	O

E-4C264(1/2)

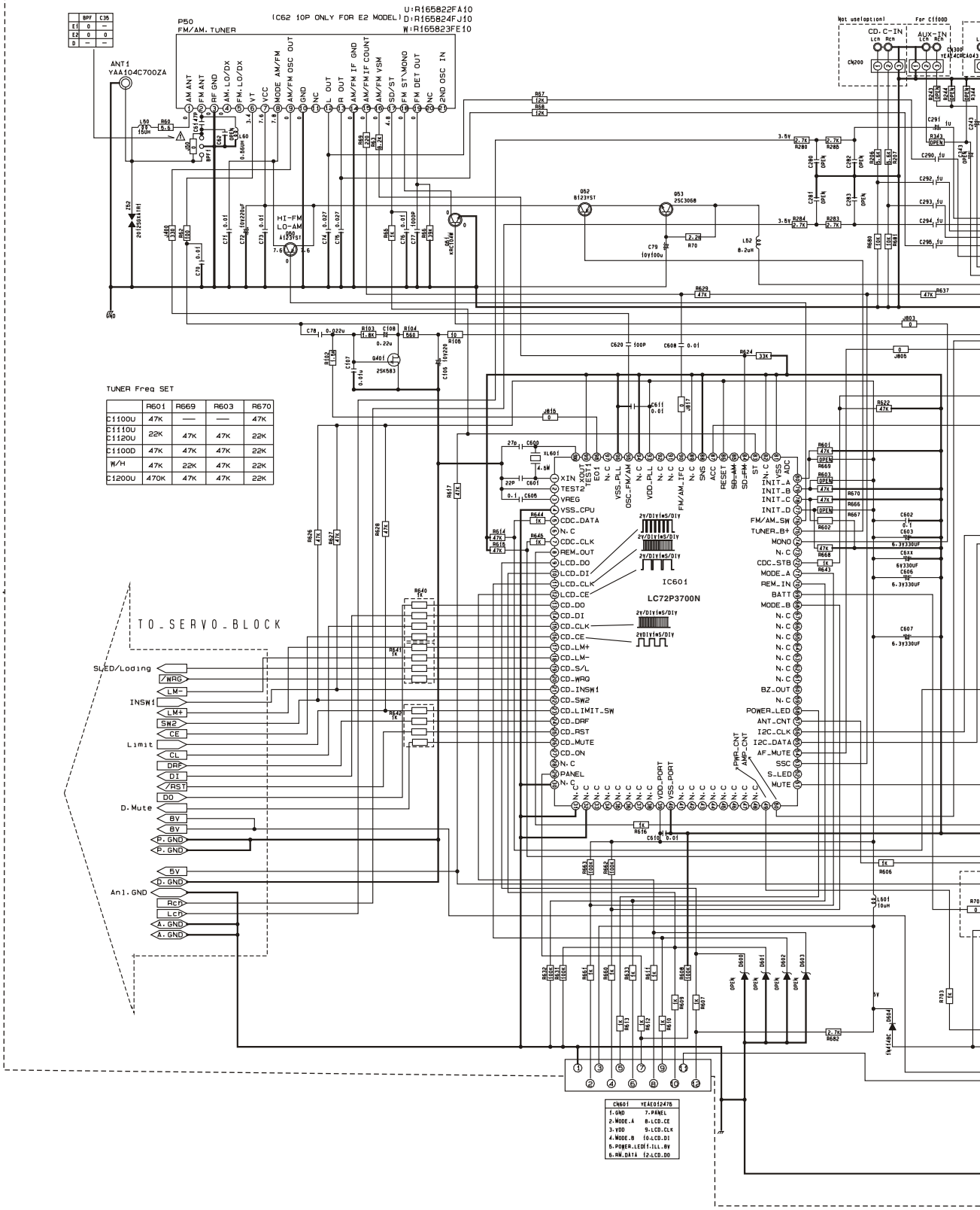
U:R165822FA10
(C62 10P ONLY FOR E2 MODEL) D:R165824FJ10
W:R165823FE10
P50
FM/AM. TUNER
ANT1
YAA104C700ZA
HI-FM
LO-AM
CD.C-IN
AUX-IN
IC601
LC72P3700N
TO_SERVO_BLOCK
SLED/Loading
INSW1
Limit
D.Mute
Anl.GND
TUNER Freq SET
CN601 YEAE012476
1.GND
2.MODE.A
3.VDD
4.MODE.B
5.POWER.LED
6.RW.DATA
7.PANEL
8.LCD.CE
9.LCD.CLK
10.LCD.DI
11.ILL.BV
12.LCD.DO

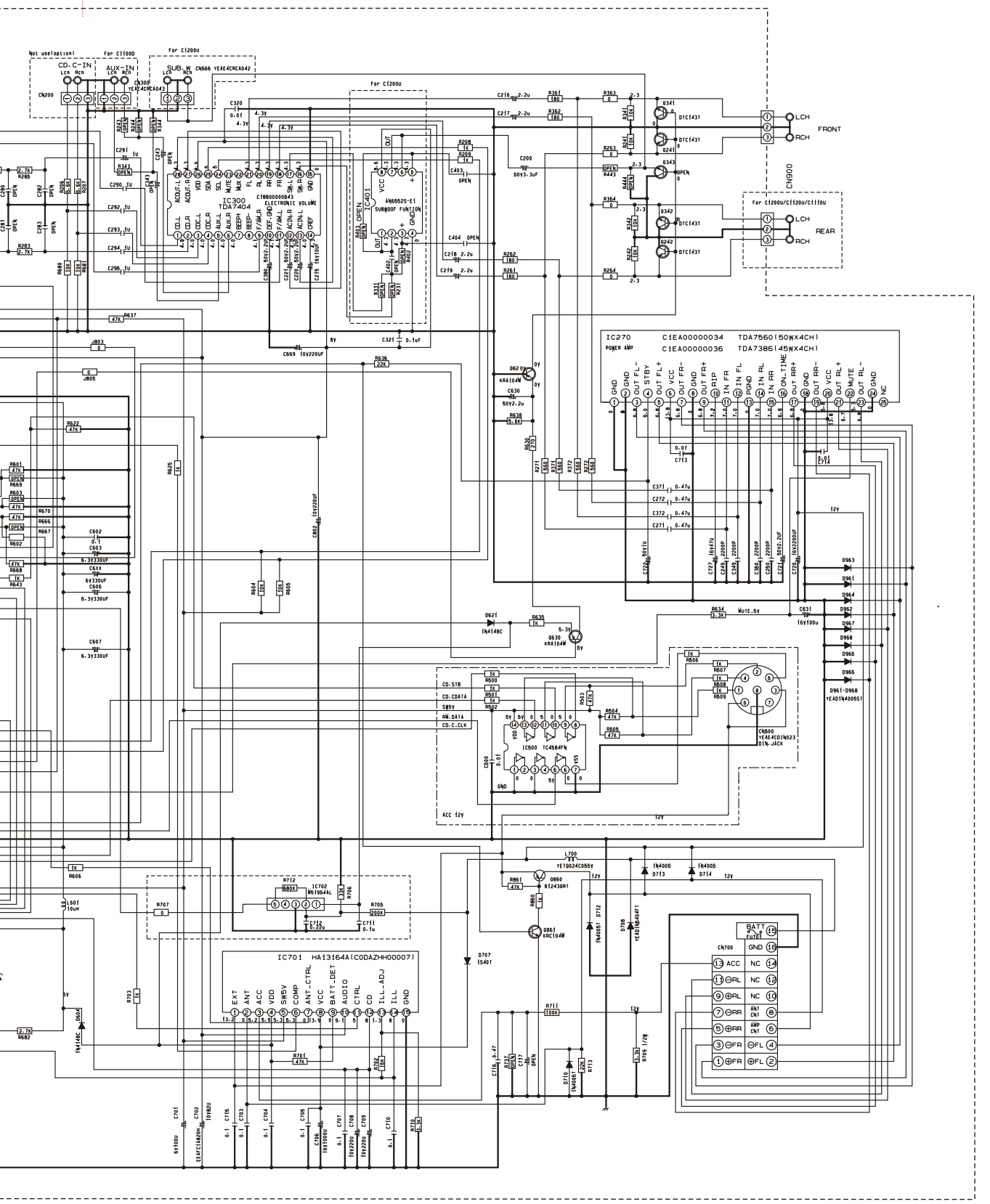

CQ-C1120H / C1130H Main Block

E-4C264(1/2)

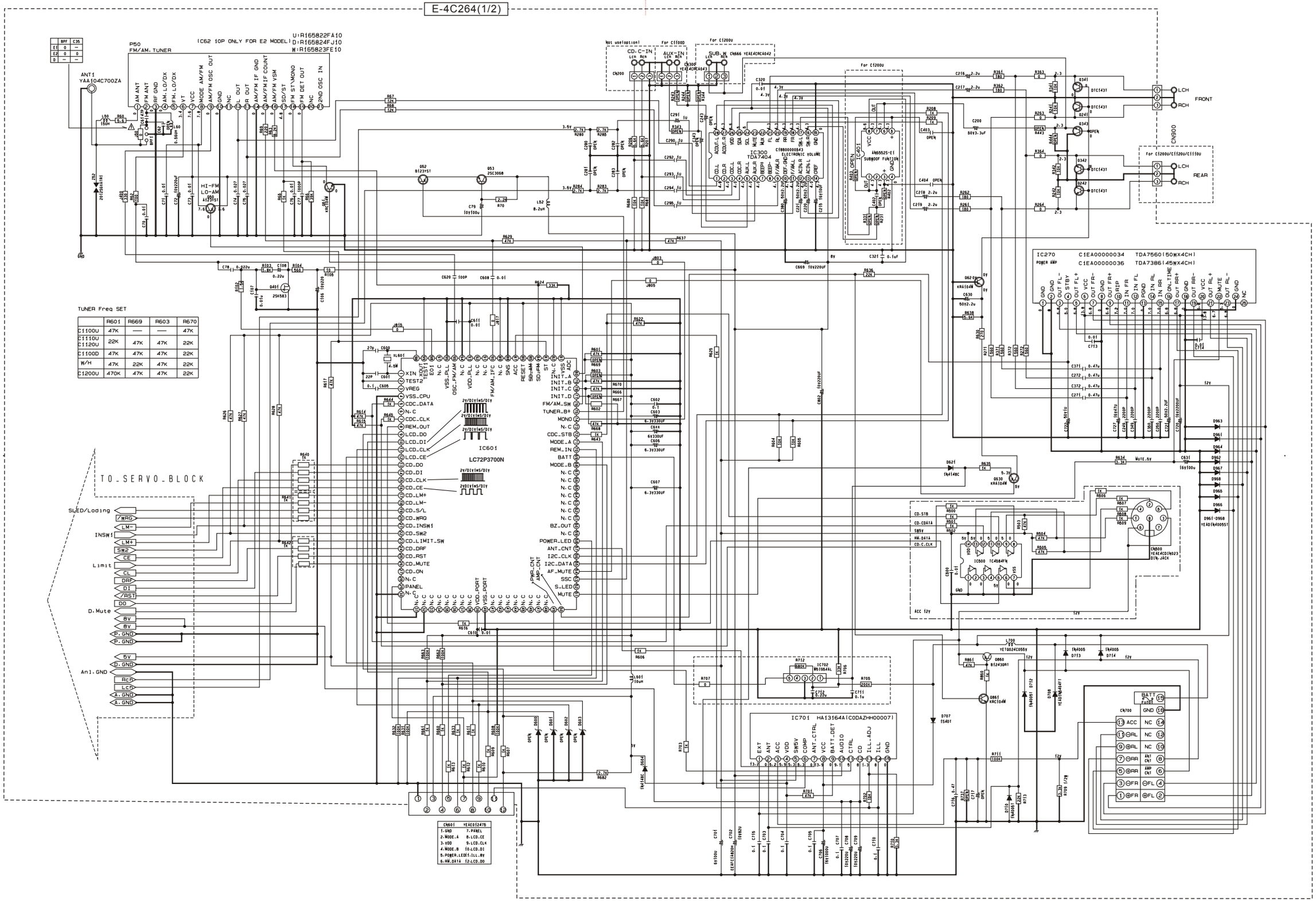

	R601	R669	R603	R670
C1100U	47K	—	—	47K
C1110U C1120U	22K	47K	47K	22K
C1100D	47K	47K	47K	22K
W/H	47K	22K	47K	22K
C1200U	470K	47K	47K	22K

CQ-C1120H / C1130H Main Block

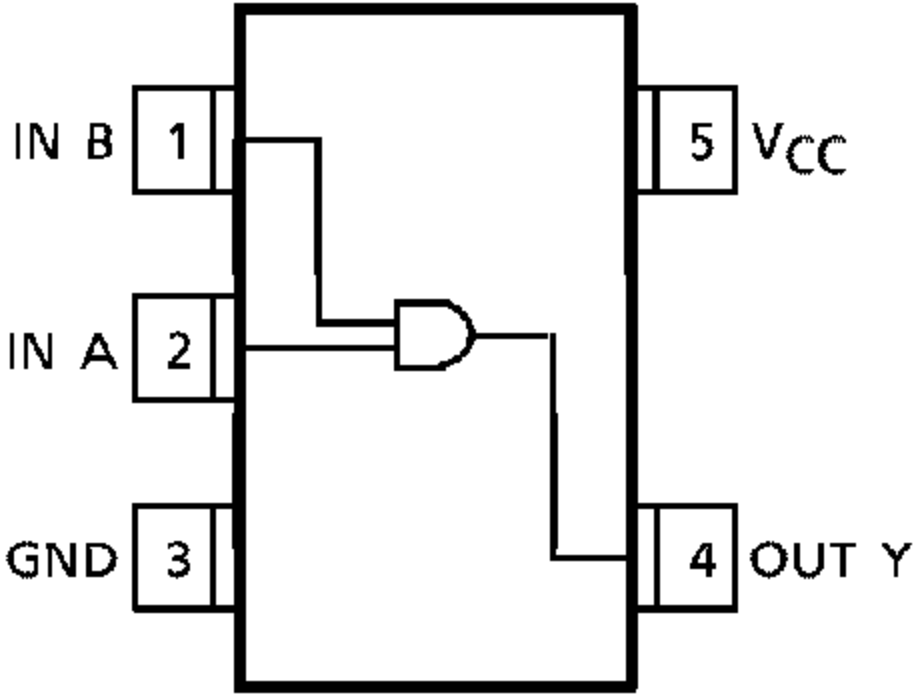
IN B
1
IN A
2
GND
3
5
V_{CC}
4
OUT Y

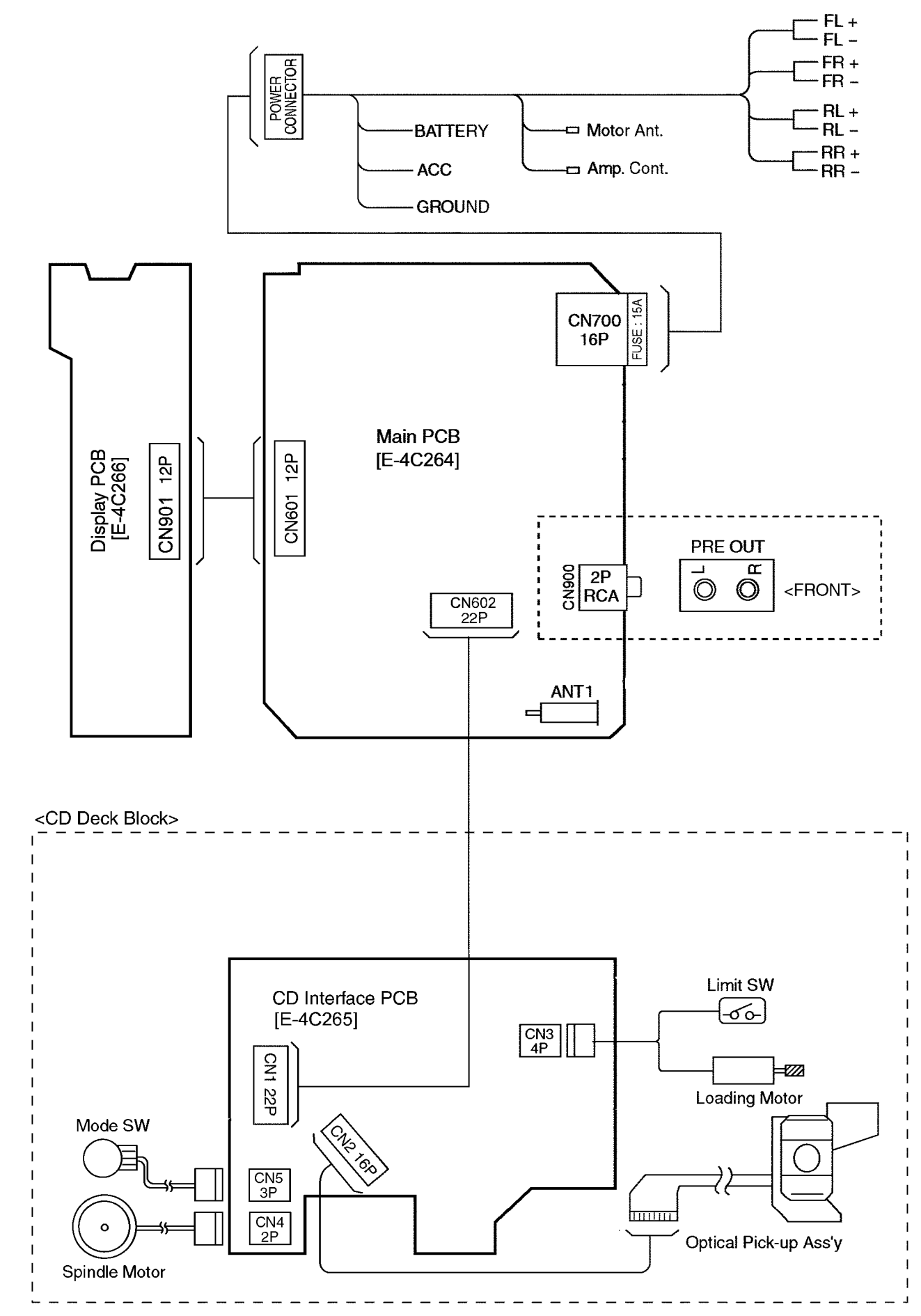
POWER CONNECTOR
BATTERY
ACC
GROUND
Motor Ant.
Amp. Cont.
FL +
FL –
FR +
FR –
RL +
RL –
RR +
RR –
Display PCB [E-4C266]
CN901 12P
CN601 12P
Main PCB [E-4C264]
CN700 16P
FUSE : 15A
CN900
2P RCA
PRE OUT
L
R
<FRONT>
CN602 22P
ANT1
<CD Deck Block>
CD Interface PCB [E-4C265]
CN1 22P
CN2 16P
CN3 4P
CN5 3P
CN4 2P
Limit SW
Loading Motor
Mode SW
Spindle Motor
Optical Pick-up Ass'y

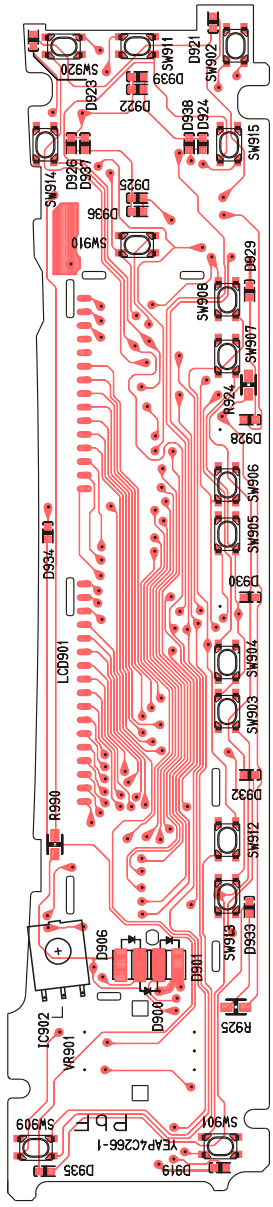

[E-4C266] [TOP VIEW]

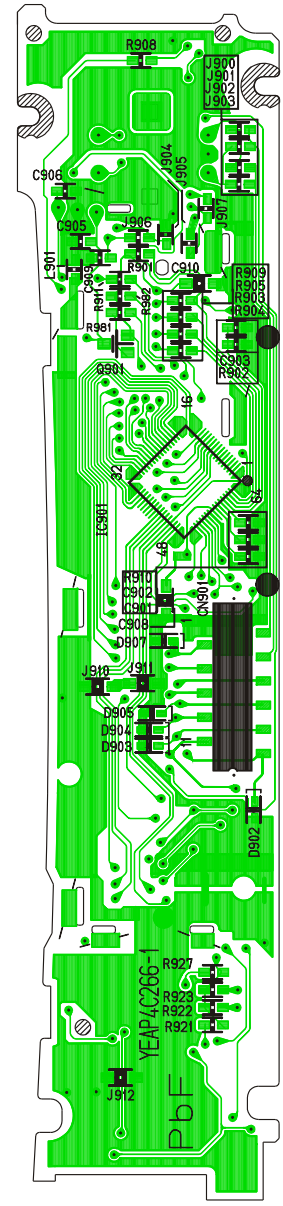

[E-4C266] [BOTTOM VIEW]

CQ-C1120H/C1130H Display PCB

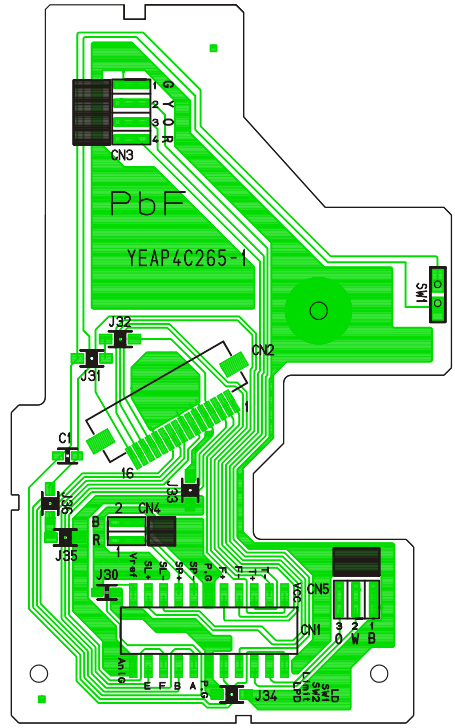

[E-4C265] [BOTTOM VIEW]

CQ-C1120H/C1130H INTERFACE PCB

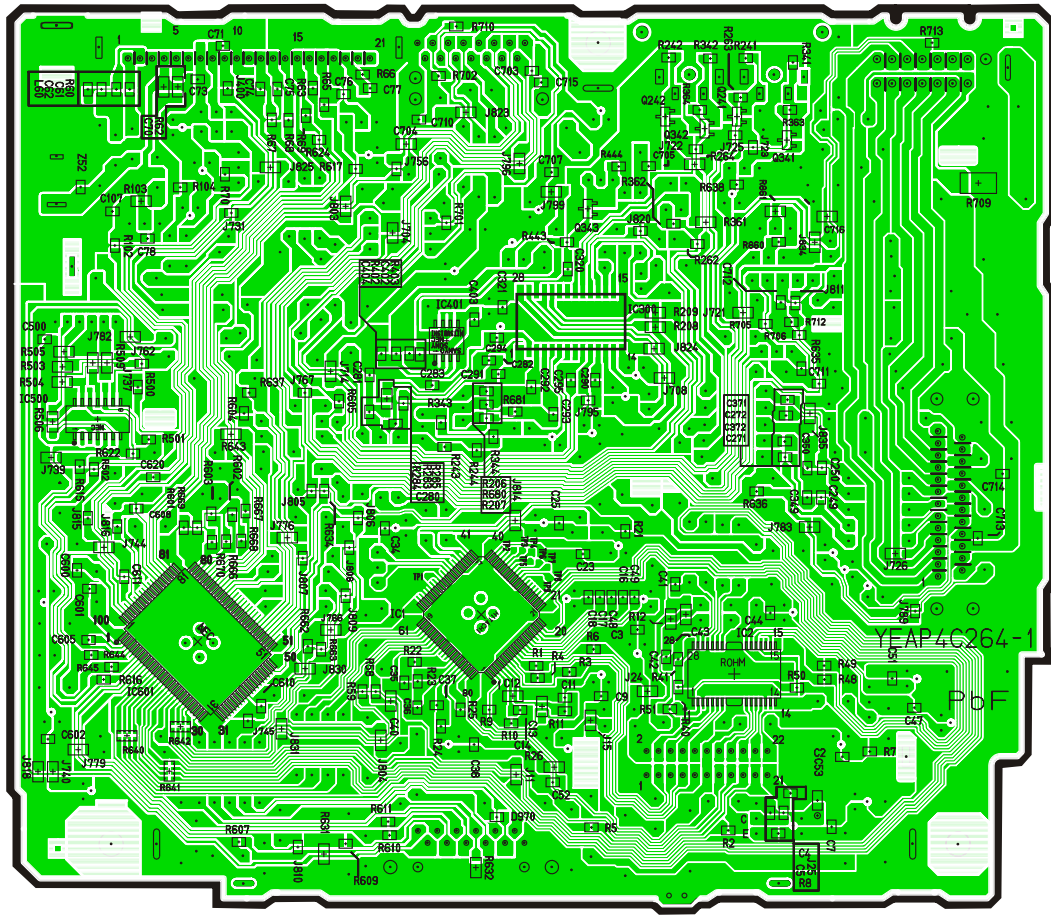

[E-4C264] [BOTTOM VIEW]

CQ-C1120H/C1130H Main PCB

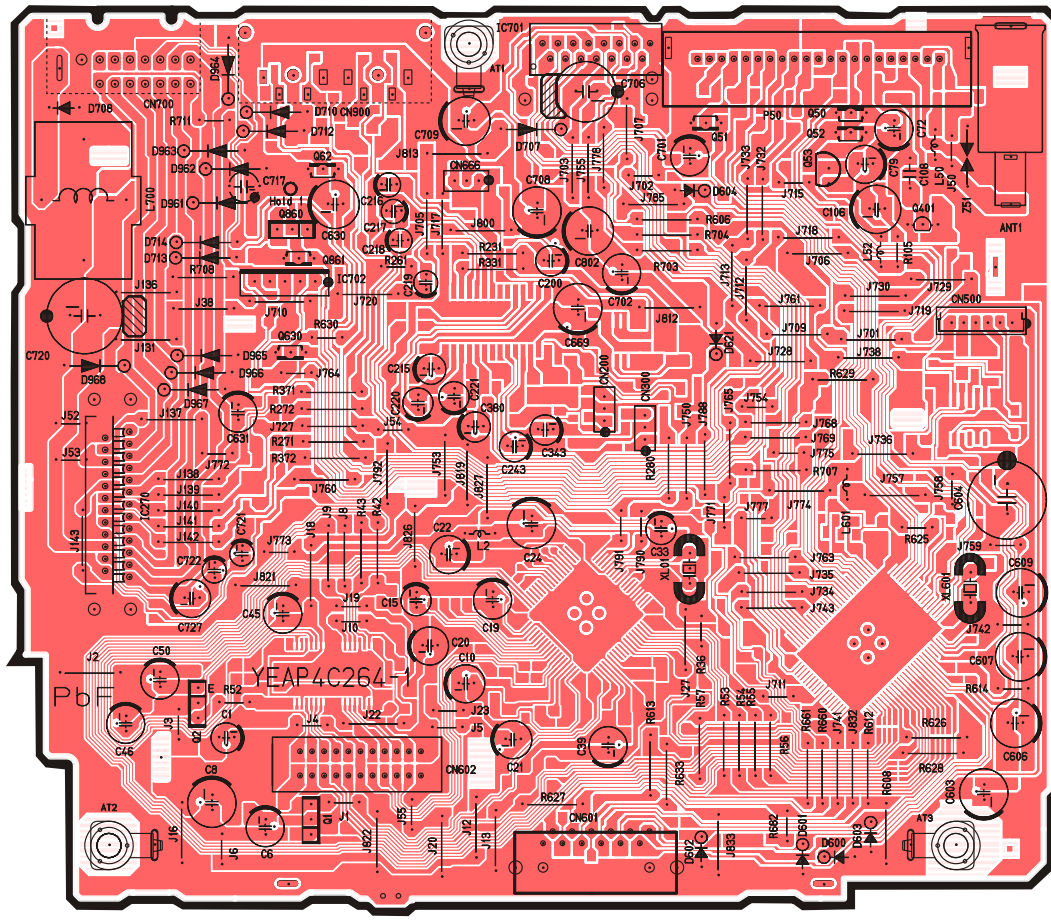

[E-4C264] [TOP VIEW]

CQ-C1120H/C1130H Main PCB