SERVICE MANUAL

CASSETTE CAR STEREO WITH AM/FM/MPX RADIO

(12 VOLT D.C. NEGATIVE EARTH)

MODEL CM-812U

ALPINE ELECTRONICS INC.

CONTENTS

SPECIFICATIONS . . . . . 2 to 3
PARTS LOCATIONS 4
DIAL CORD STRINGING 4
BLOCK DIAGRAM 5
ADJUSTMENT . . . . . 6 to 8
PRINTED CIRCUIT BOARDS . . . . . 8 to 9
SEMICONDUCTOR LEAD IDENTIFICATION 10
PACKING METHOD 10
WIRING DIAGRAM . . . . . 11 to 12
SCHEMATIC DIAGRAM . . . . . 13 to 14
EXPLODED VIEW, MAIN ASSEMBLY 15
EXPLODED VIEW, CASSETTE MECHANISM 16
PARTS LIST . . . . . 17 to 20

SPECIFICATIONS

Description	Nominal	Limit(s)	Conditions
	AM BAND SECTION		
Frequency Range	510 ∿ 1640 kHz	520 kHz, 1620 kHz	
Image Rejection	455 kHz		
Maximum Sensitivity	20 dB	26 dB	Vol. control: max. 1W output
Quieting Sensitivity	22 dB	28 dB	S/N 20 dB, 1W output
Selectivity	28 dB	20 dB	1000 ± 10 kHz
Band Width	6 ±3 kHz	6 ±5 kHz	1000 kHz, 6 dB down
Image Rejection	55 dB	50 dB	1400 kHz
IF Rejection	45 dB	35 dB	
Signal-to-Noise Ratio	45 dB	40 dB	1000 kHz., 74 dB input
A.G.C. Figure of Merit	50 dB	45 dB	74 dB input, mod; 400 Hz, 30%
Audio Fidelity			
Low	50 Hz	100 Hz	6 dB down, 1000 kHz, 5mV
High	2300 Hz	1500 Hz	
Distortion	1%	3%	1000 kHz, 74 dB, 30% mod.

Description	Nominal	Limit(s)	Conditions
FM BAND SECTION			
Frequency Range	87 ∿ 105 MHz	88 MHz, 104 MHz	
Intermediate Frequency	10.7 MHz		
Quieting Sensitivity	14 dB	20 dB	(S+N)/N: 30 dB
Limiting Sensitivity	16 dB	26 dB	Ref. Input 40 dB, 3 dB down
Signal-to-Noise Ratio	60 dB	50 dB	94 MHz, 40 dB input
AM Rejection	44 dB	36 dB	94 MHz, mod; 400 Hz, 75 kHz dev. AM: 1000 kHz, mod; 400 Hz, 30%
Image Rejection	45 dB	40 dB	94 MHz
IF Rejection	70 dB	60 dB	94 MHz
Audio Fidelity (De-emphasis)			
Low	50 Hz	100 Hz	94 MHz, 40 dB; 22.5 dev., 3 dB down
High	3000 Hz	2500 Hz	
AFC Holding Range	± 400 kHz	± 600 kHz	94 MHz, 40 dB input, 75 kHz dev 3 dB down
Power Output	4.5W	3.5W	94 MHz, 75 kHz dev; 10% distortion
Distortion	1%	3%	94 MHz, 60 dB input; dev; 22.5 kHz
Stereo Separation	24 dB	20 dB	
Stereo Light Turn ON/OFF	20 dB	20 dB	94 MHz, 22.5 kHz dev.
Level	5 dB	5 dB	1000 Hz Audio Signal
TAPE PLAYER SECTION			
Tape Speed	4.76cm + 1%	4.76cm + 4%, –2%	14V DC Test Tape: MTT-111 at + 20 ∿ + 30°C
F.F. Time		140sec.	14V DC
Wow & Flutter	0.25%	0.35%	14V DC, RMS value
Frequency Response			
6.3 kHz		±6 dB	Treble: –3 dB Bass: –12 dB
125 Hz		± 4 dB	Treble:+ 1 dB Bass: + 1 dB Test Tape: MTT-116U Reference Level: 333 Hz 0 dB
Signal-to-Noise Ratio	50 dB	40 dB	Test Tape: MTT-112
Crosstalk	43 dB	35 dB	Test Tape: MTT-121
Channel Separation	35 dB	30 dB	Test Tape: MTT-141
GENERAL			
Power Source	14.0V DC Negative Ground		
Current Drain			
RADIO	2000mA	2400mA	Maximum power output
TAPE	2100mA	2500mA	Maximum power output
Power Output	3.5 W	3 W	10% distortion
Maximum Output	4.5 W	4 W	
Dimensions	136(D) x 178(W) x 42(H) mm		
Weight	1.4 Kg		

PARTS LOCATIONS

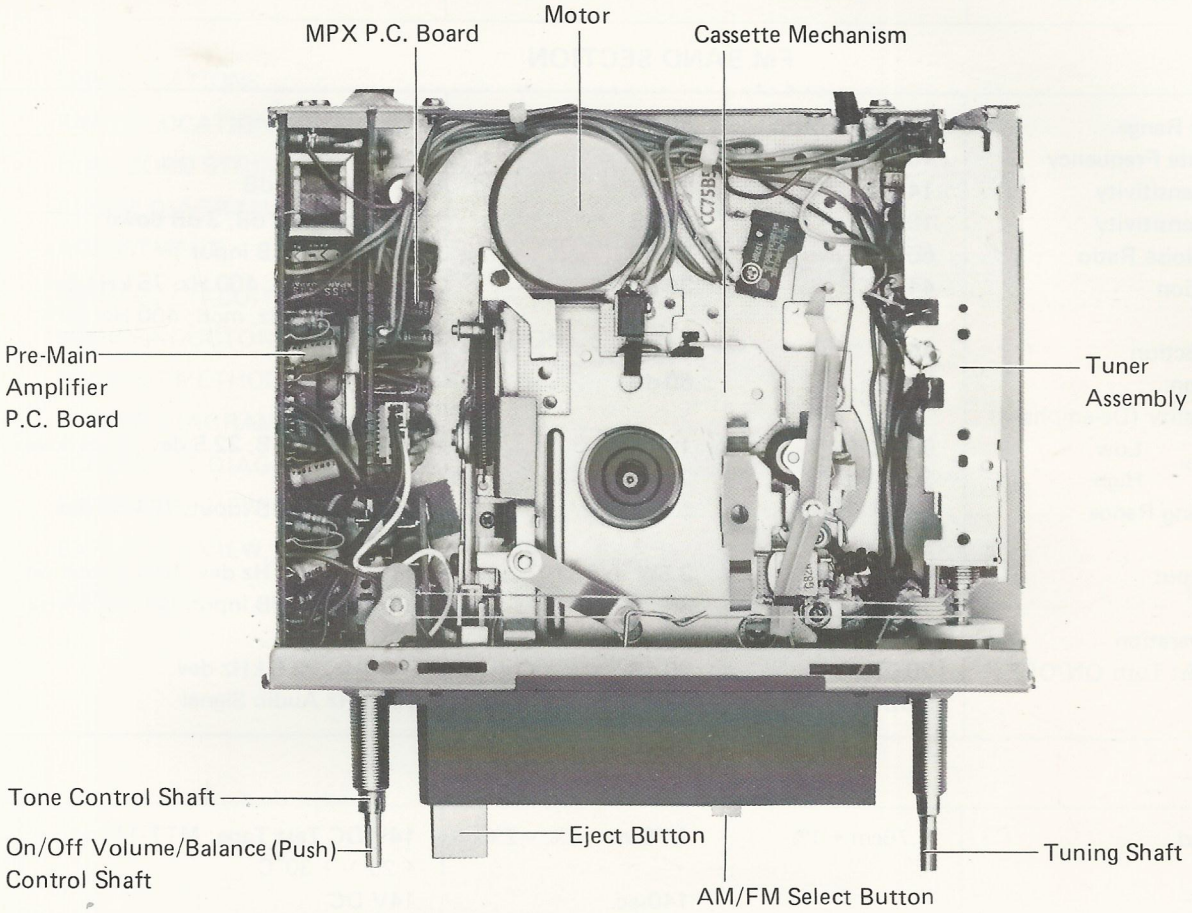

DIAL CORD STRINGING

1) Set the tuning capacitor to the maximum capacitance (fully counterclockwise position).
2) Wind the dial cord in the numerical sequence as shown in direction of the arrows.

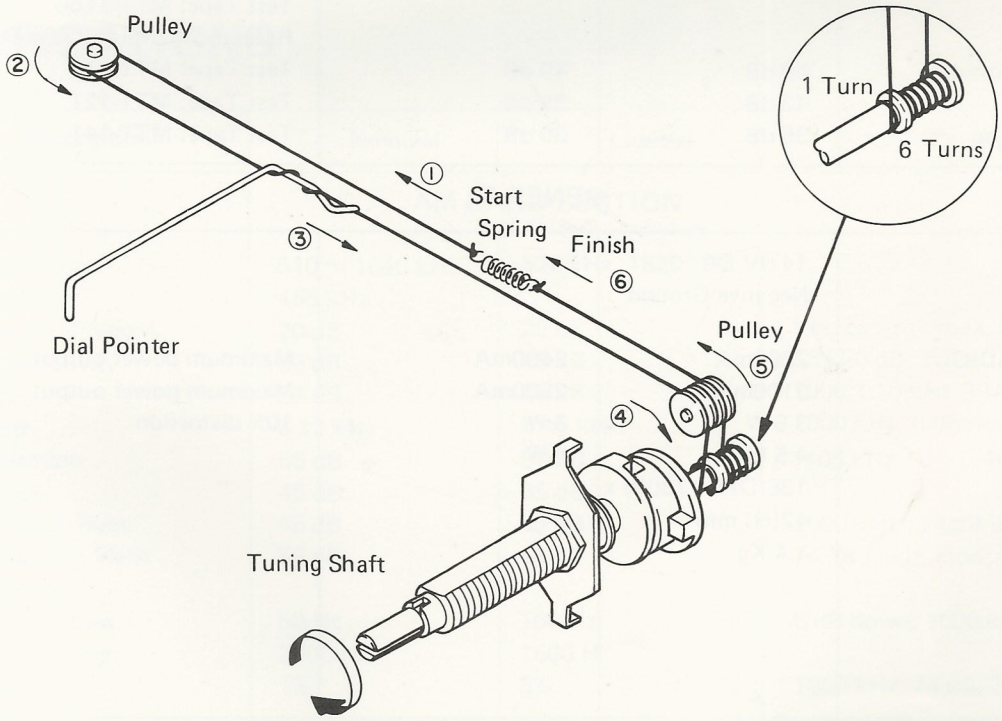

BLOCK DIAGRAM

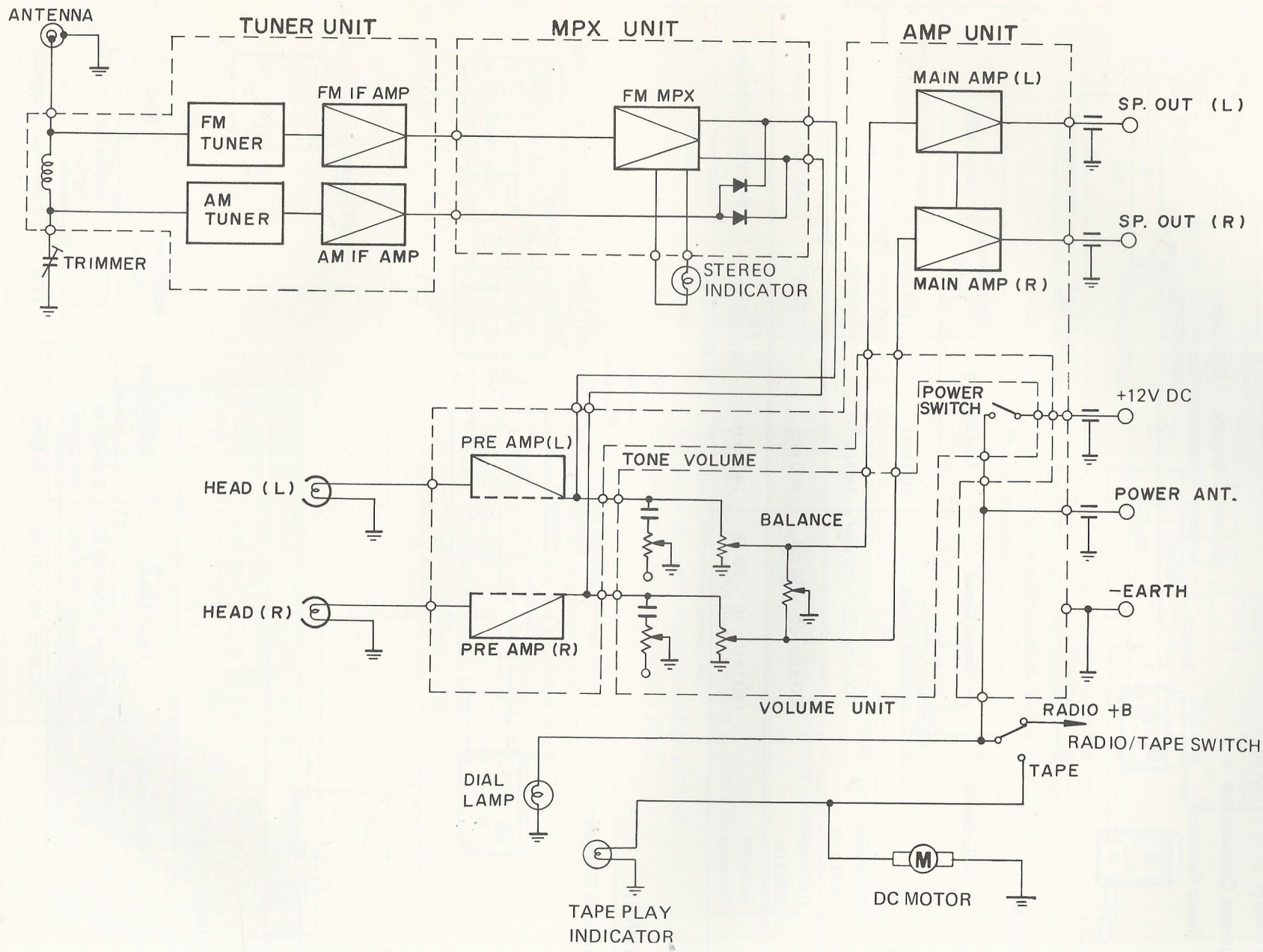

ADJUSTMENT

AM TUNER

Instrument Connection

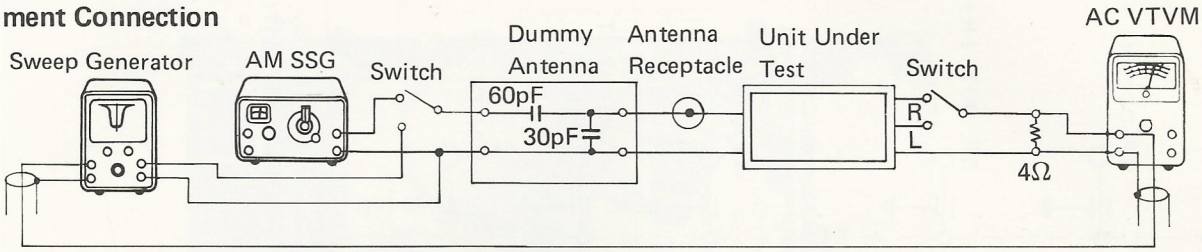

Procedures

Step	Adjustment	Input Signal	Dial Setting	Adjustment Parts	Hint
1	IF	455 kHz, 60 dB	600 kHz	IFT2 ∿ 5	Adjust for "V" curve and max. amplitude
2	Calibration 1400 kHz	1400 kHz, 25 ∿ 30 dB	1400 kHz	TCO2	For max. reception
3	Calibration 600 kHz	600 kHz, 25 ∿ 30 dB	600 kHz	TLO	For max. reception
4	Antenna Trimmer	1400 kHz, 10 ∿ 20 dB	1400 kHz	TC1	For max. reception

FM TUNER

Instrument Connection

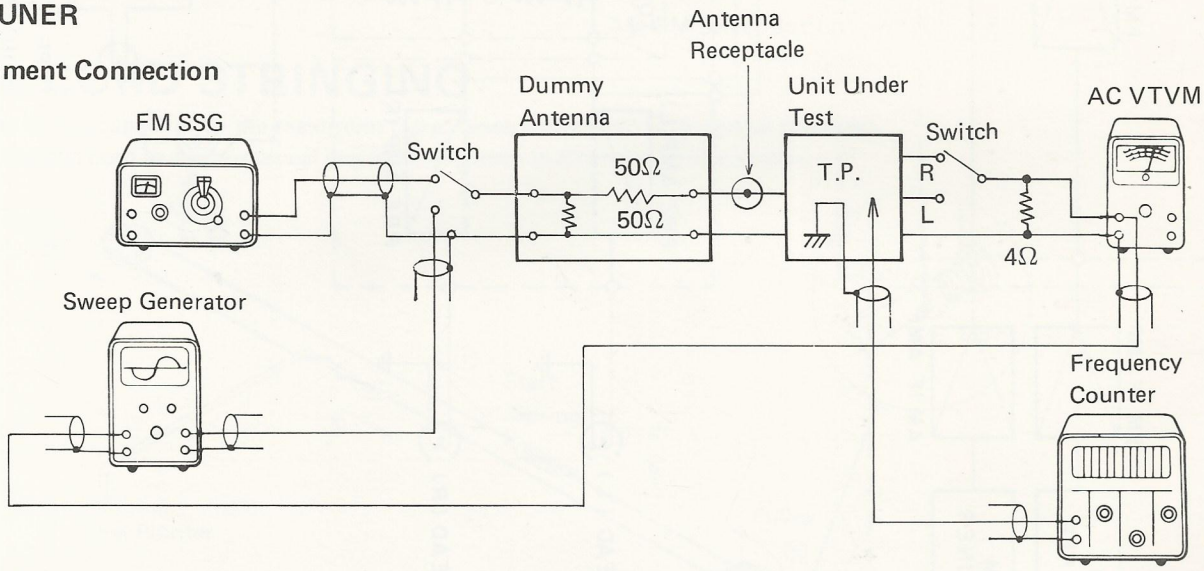

Procedures

Step	Adjustment	Input Signal	Dial Setting	Adjustment Parts	Hint
1	IF	10.7 MHz, 40 ∿ 70 dB from Sweep Generator	Possible at any point	IFT1 LD	Adjust for optimum "S" curve
2	FM Calibration	104 MHz, 15 ∿ 20 dB	104 MHz	TCO	For max. reception
3	MPX Circuit	No signal		VR101	For 19 kHz

TAPE PLAYER

Instrument Connection

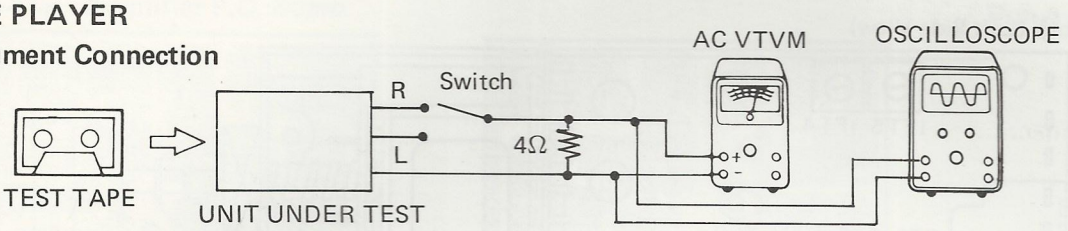

Procedures

Step	Measurement	Test Tape	Remarks
1	Azimuth	MTT-113 6.3 kHz Signal tape	Adjust the screw for maximum reading on V.T.V.M. s. Output maximum. 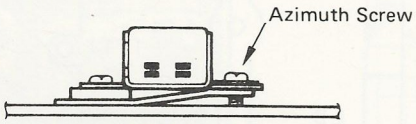
2	Wow and Flutter	MTT-111 3 kHz Signal tape	L-ch or R-ch Wow and Flutter read on Wow and Flutter Meter. Less than 0.35%
3	Tape Speed		L-ch or R-ch Tape Speed read on Frequency counter. Within −2% ∿ + 4%
4	Cross talk (Track)	MTT-121 L-R-ch 1 kHz Signal tape on Forward. (L-Rch no signal tape on reverse)	L-ch and R-ch output maximum read on V.T.V.M. Turn the Test tape on blank. L-ch and R-ch output minimum read on V.T.V.M. Difference of L and R is more than 35 dB.
5	Cross talk (Separation)	MTT-141 L-ch 1 kHz Signal tape	L-ch output maximum read on V.T.V.M. R-ch output minimum read on V.T.V.M. Difference of L and R is more than 30 dB.
6	Frequency Characteristic	MTT-116U 125 Hz, 333 Hz 6.3 kHz Signal tape	L-ch and R-ch Output read on V.T.V.M. 333 Hz; Standard 6.3 kHz; Treble −3 dB, Bass −12 dB, Tolerance ± 6 dB 125 kHz; Treble +1 dB, Bass + 1 dB, Tolerance ± 4 dB

Layout of Adjustable Parts

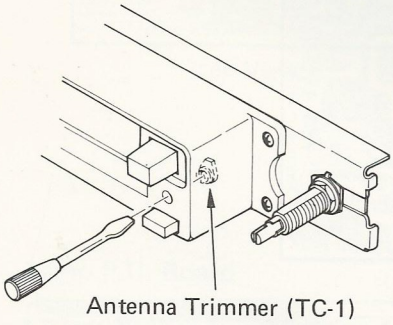

MPX P.C. Board

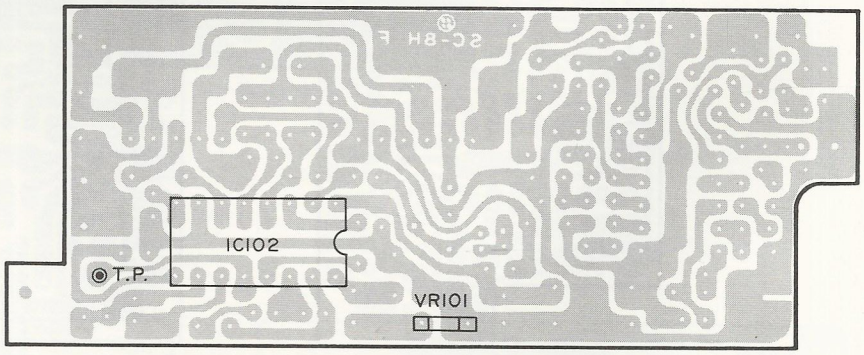

Tuner Assembly (Left Side View)

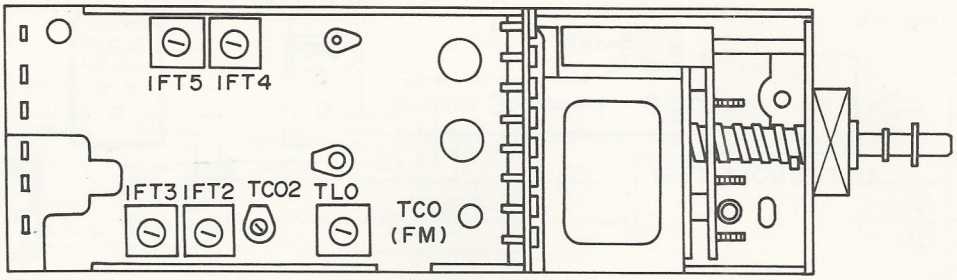

Tuner Assembly (Right Side View)

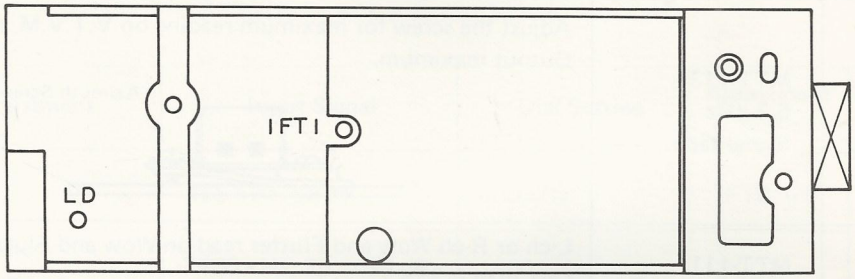

PRINTED CIRCUIT BOARDS

MPX P.C. Board

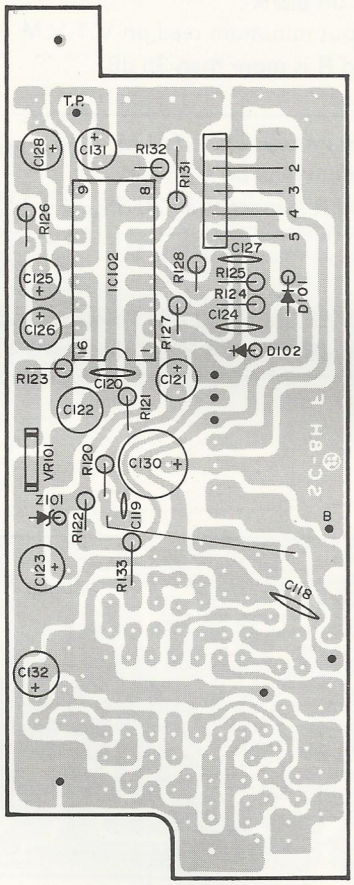

Top View

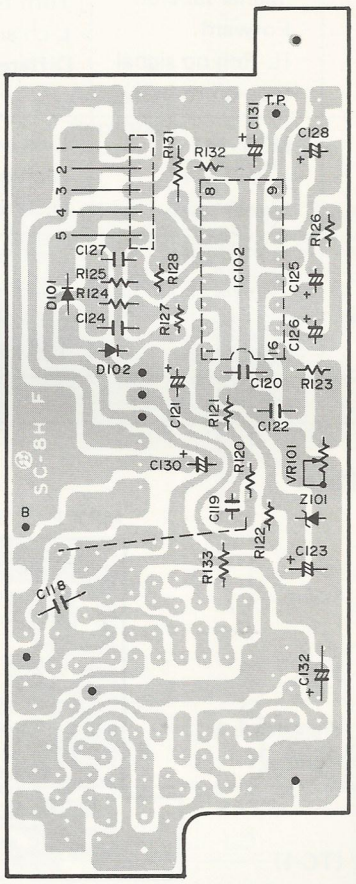

Bottom View

Pre-Main Amplifier P.C. Board

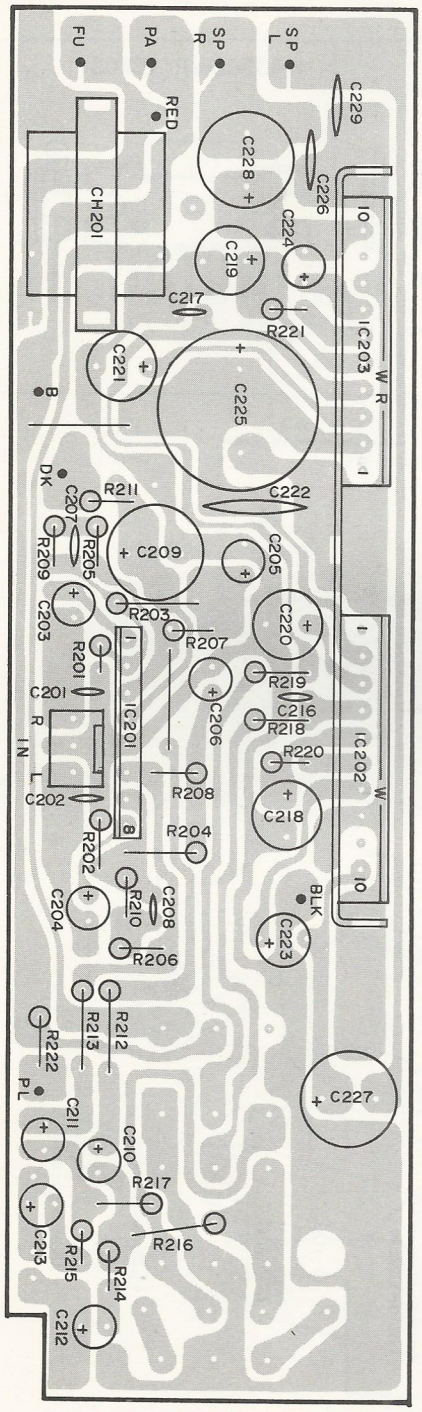

Top View

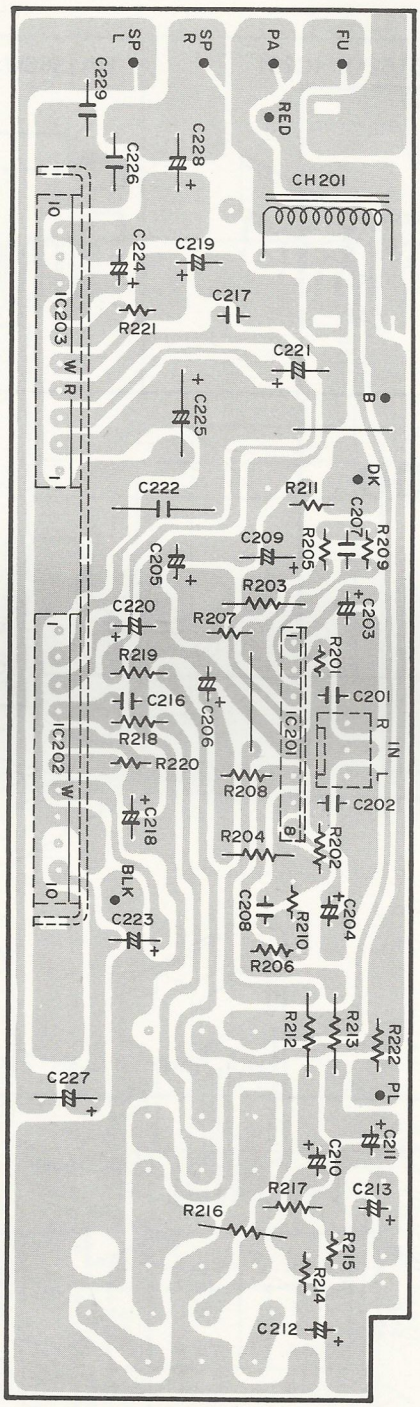

Bottom View

Volume P.C. Board

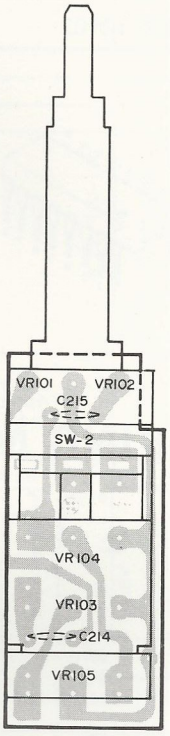

Top View

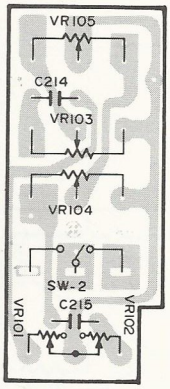

Bottom View

Lamp P.C. Board

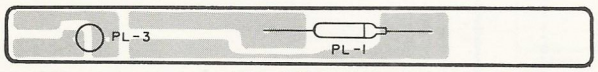

Top View

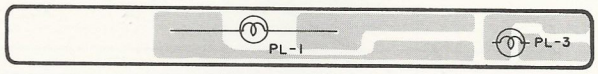

Bottom View

SEMICONDUCTOR LEAD IDENTIFICATION

HA11227: IC102	M51521L: IC201	HA1366W: IC202	HA1366WR: IC203
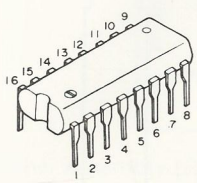	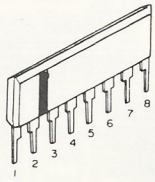	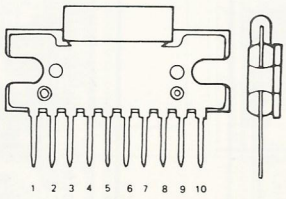	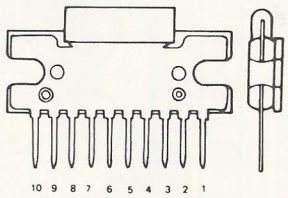

PACKING METHOD

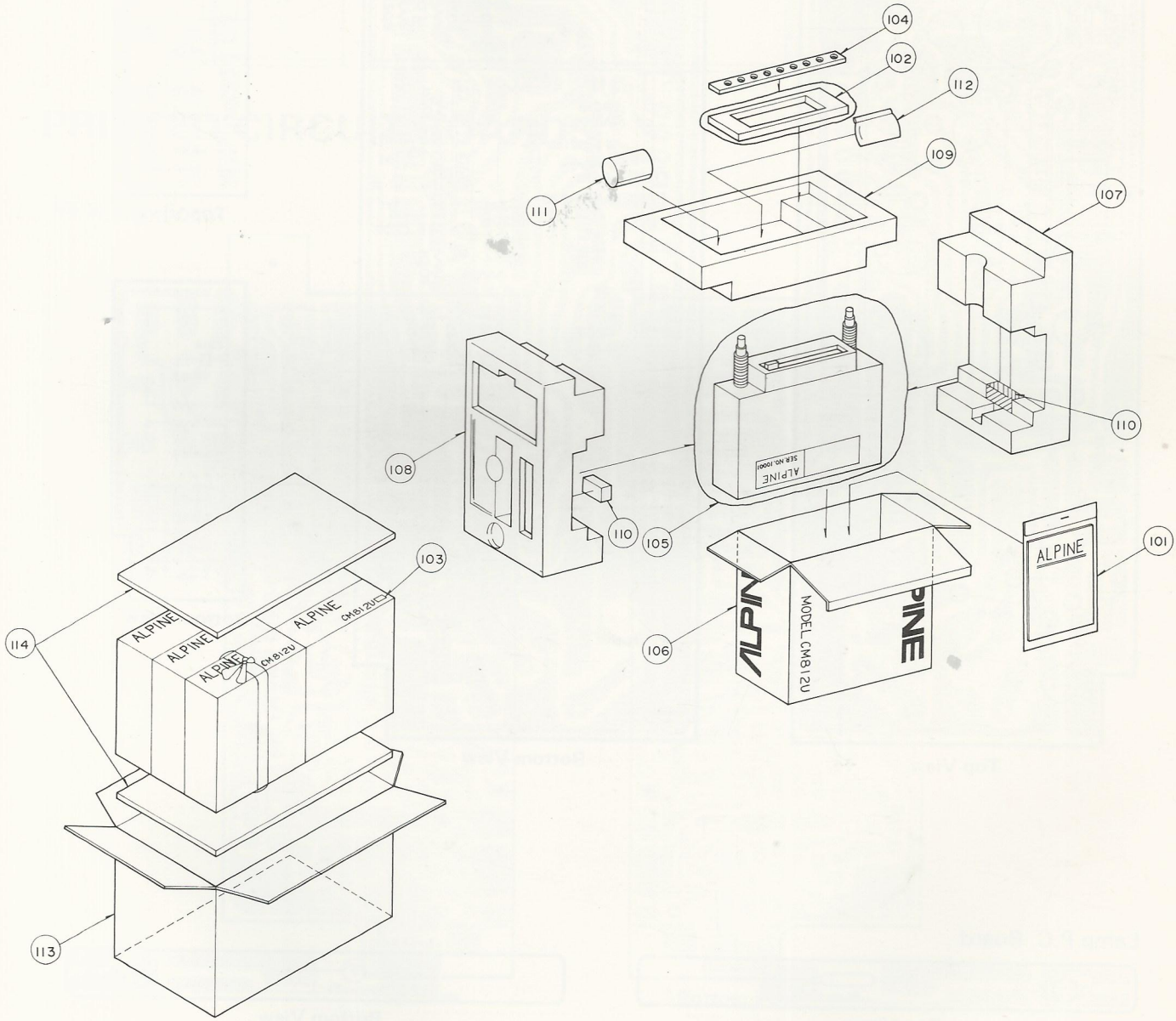

WIRING DIAGRAM

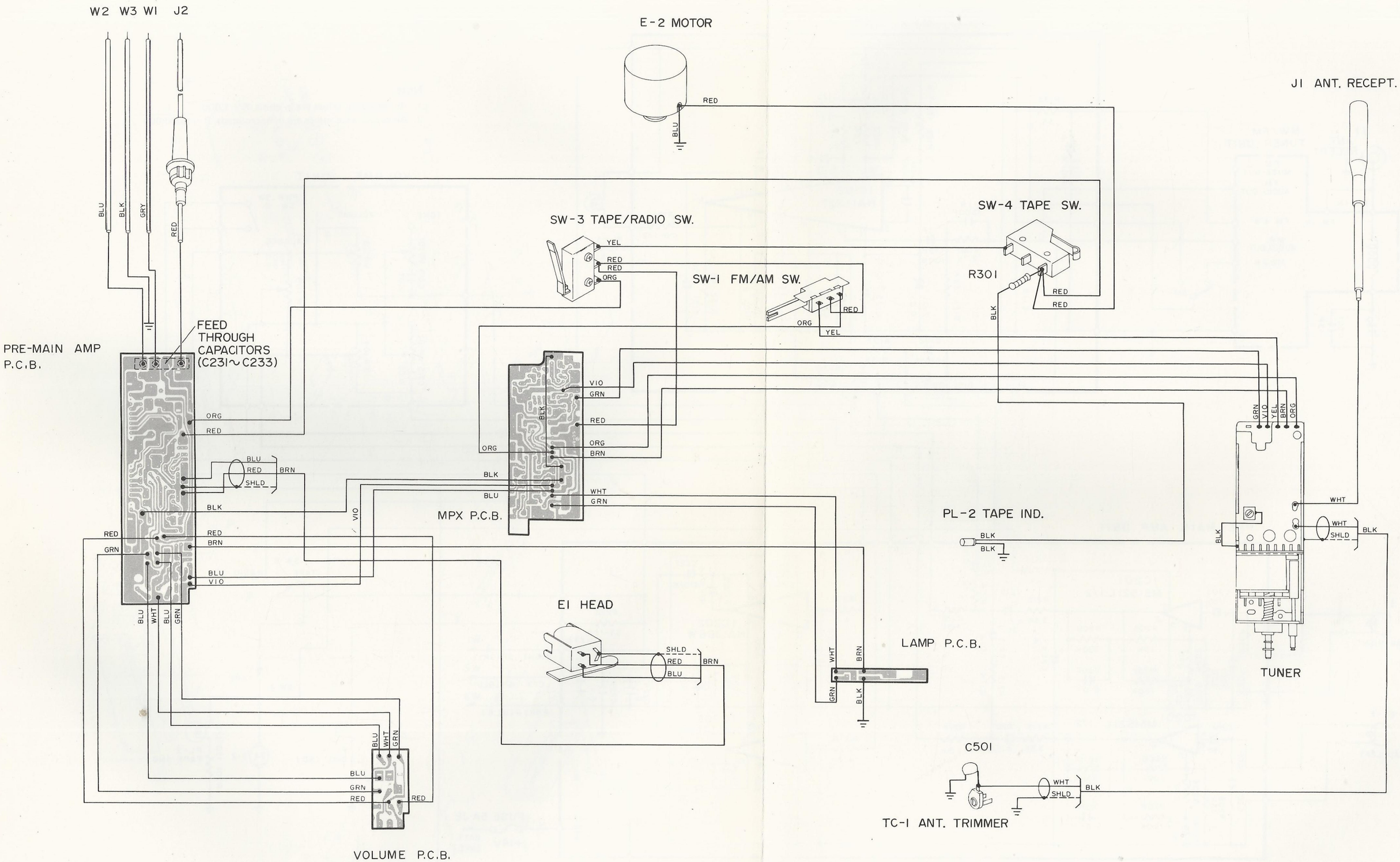

SCHEMATIC DIAGRAM

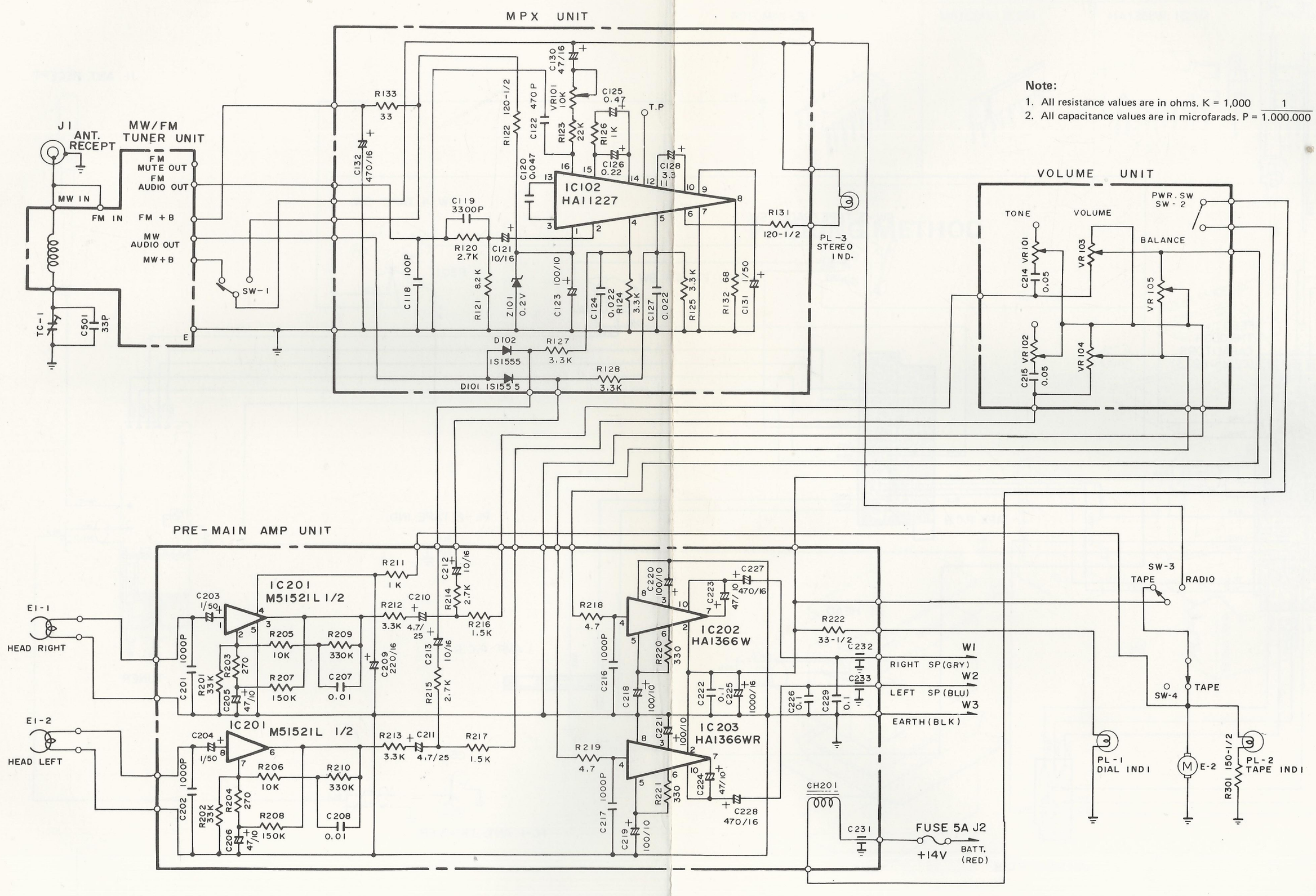

Note:

1. All resistance values are in ohms. K = 1,000
2. All capacitance values are in microfarads. P = $\frac{1}{1.000.000}$

EXPLODED VIEW, MAIN ASSEMBLY

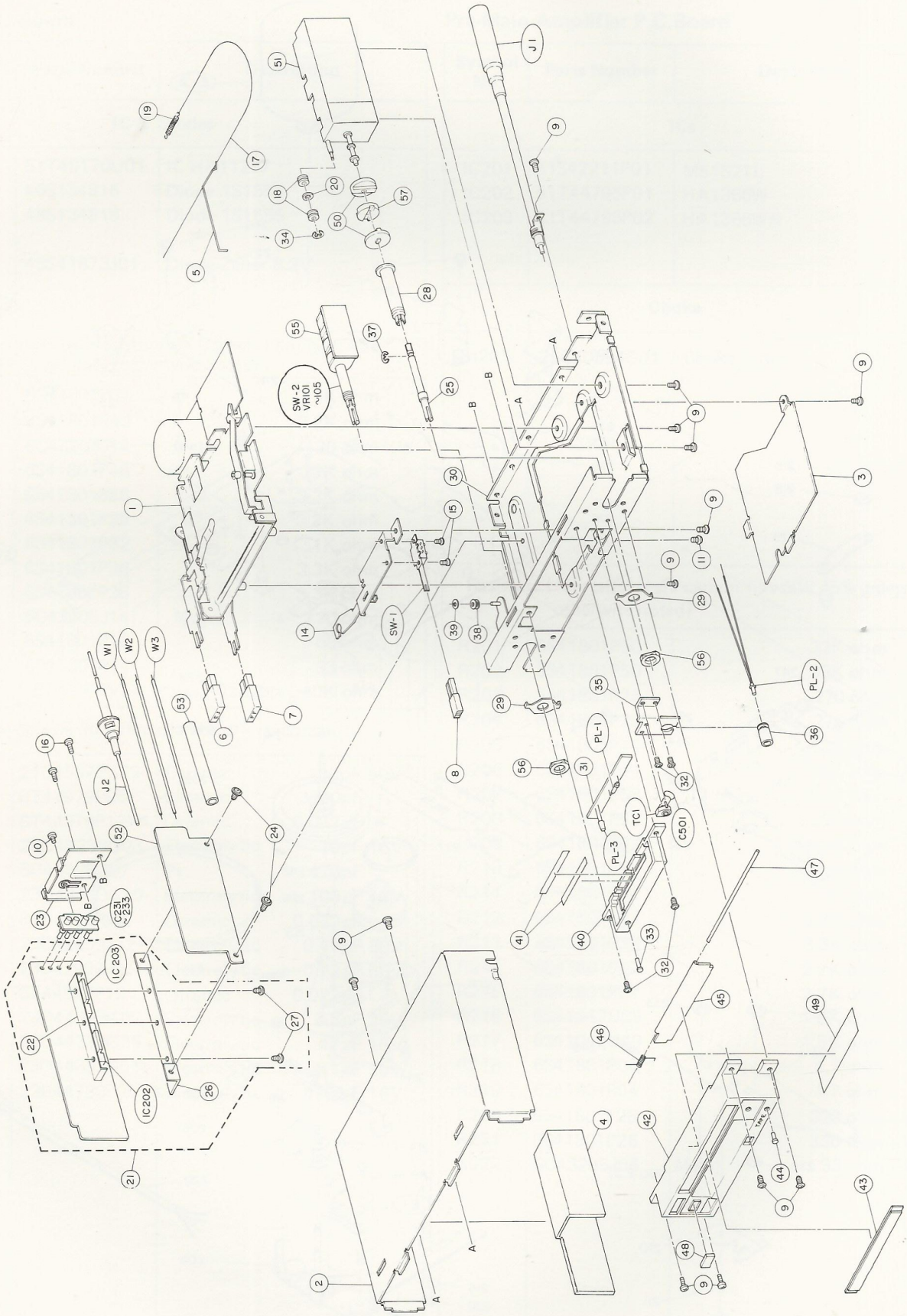

EXPLODED VIEW,CASSETTE MECHANISM

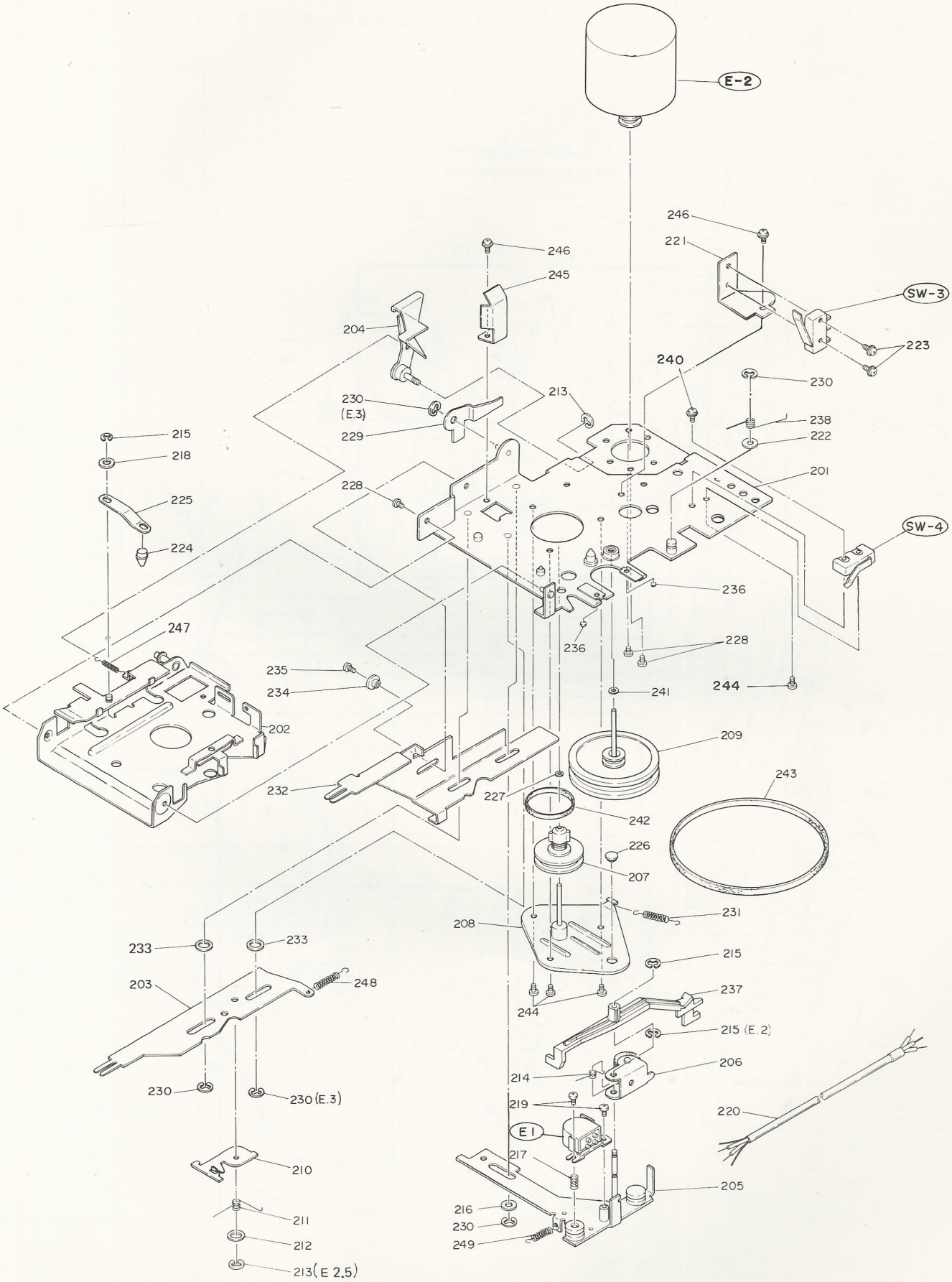

PARTS LIST

MPX P.C.Board

Symbol No.	Parts Number	Description	
IC & Diodes			
IC102	51T40170U01	IC HA11227	
D101	48S134816	Diode 1S1555	
D102	48S134816	Diode 1S1555	
Z101	48S41873J01	Diode Zener 8.2V	
Resistors (All resistors are Carbon Film ¼W, ±5% unless otherwise noted)			
R120	6S41801P37		2.7K ohm
R121	6S41801P43		8.2K ohm
R122	6C43205J14	Metal	120 ohm ½W
R123	6S41801P48		22K ohm
R124	6S41801P38		3.3K ohm
R125	6S41801P38		3.3K ohm
R126	6S41801P32		1K ohm
R127	6S41801P38		3.3K ohm
R128	6S41801P38		3.3K ohm
R131	6C43205J14	Metal	120 ohm ½W
R132	6S41801P18		68 ohm
R133	6S41801P14		33 ohm
VR101	18B42472P04	Res., Variable	10K ohm
Capacitors (u = microfarads, p = picofarads)			
C118	21C45322G22	Ceramic	100pF 50V
C119	8T44979P05	Ceramic	3300pF
C120	8T44979P12	Ceramic	0.047μF
C121	23D44333G08	Electrolytic	10μF 16V
C122	8C42195G07	Ps	470pF
C123	23D44333G30	Electrolytic	100μF 10V
C124	8T44979P10	Ceramic	0.022μF
C125	23C42909J02	Electrolytic	0.47μF 50V
C126	23C42909J01	Electrolytic	0.22μF 50V
C127	8T44979P10	Ceramic	0.022μF
C128	23D44333G02	Electrolytic	3.3μF 25V
C130	23D44333G25	Electrolytic	47μF 16V
C131	23D44333G01	Electrolytic	1μF 50V
C132	23B44780P05	Electrolytic	470 μF 16V

Pre-Main Amplifier P.C.Board

Symbol No.	Parts Number	Description	
ICs			
IC201	51S42211P01	M51521L	
IC202	51T44795P01	HA1366W	
IC203	51T44795P02	HA1366WR	
Choke			
CH201	25C40894G01	Choke Filter	
Resistors (All resistors are carbon film ¼W ±5% unless otherwise noted)			
R201	6S41801P50		33K ohm
R202	6S41801P50		33K ohm
R203	6S41801P25		270 ohm
R204	6S41801P25		270 ohm
R205	6S41801P44		10K ohm
R206	6S41801P44		10K ohm
R207	6S41801P58		150K ohm
R208	6S41801P58		150K ohm
R209	6S41801P62		330K ohm
R210	6S41801P62		330K ohm
R211	6S41801P32		1K ohm
R212	6S41801P38		3.3K ohm
R213	6S41801P38		3.3K ohm
R214	6S41801P37		2.7K ohm
R215	6S41801P37		2.7K ohm
R216	6S41042U69		1.5K ohm 1/8W
R217	6S41042U69		1.5K ohm 1/8W
R218	6S41801P04		4.7 ohm
R219	6S41801P04		4.7 ohm
R220	6S41801P26		330 ohm ¼W
R221	6S41801P26		330 ohm ¼W
R222	6C43205J06	Metal	33 ohm ½W

Symbol No.	Parts Number	Description
		Capacitors
C201	8T44979P01	Ceramic 1000pF
C202	8T44979P01	Ceramic 1000pF
C203	23D44333G01	Electrolytic 1uF 50V
C204	23D44333G01	Electrolytic 1uF 50V
C205	23D44333G24	Electrolytic 47uF 10V
C206	23D44333G24	Electrolytic 47uF 10V
C207	8T44979P08	Ceramic 0.01uF
C208	8T44979P08	Ceramic 0.01uF
C209	23B44780P03	Electrolytic 220uF 16V
C210	23D44333G05	Electrolytic 4.7uF 25V
C211	23D44333G05	Electrolytic 4.7uF 25V
C212	23D44333G08	Electrolytic 10uF 16V
C213	23D44333G08	Electrolytic 10uF 16V
C216	8T44979P01	Ceramic 1000pF
C217	8T44979P01	Ceramic 1000pF
C218	23D44333G30	Electrolytic 100uF 10V
C219	23D44333G30	Electrolytic 100uF 10V
C220	23D44333G30	Electrolytic 100uF 10V
C221	23D44333G30	Electrolytic 100uF 10V
C222	8T44979P14	Ceramic 0.1uF
C223	23D44333G24	Electrolytic 47uF 10V
C224	23D44333G24	Electrolytic 47uF 10V
C225	23B44780P06	Electrolytic 1000uF 16V
C226	21B41870J02	Ceramic 0.1uF
C227	23B44780P05	Electrolytic 470uF 16V
C228	23B44780P05	Electrolytic 470uF 16V
C229	21B41870J02	Ceramic 0.1uF

Miscellaneous Parts

Symbol No.	Parts Number	Description
C214	21B41870J06	Cap., Ceramic 0.05 μF
C215	21B41870J06	Cap., Ceramic 0.05μF
C231	21B40802T01	Cap., Feed Through
C232	21B40802T01	Cap., Feed Through
C233	21B40802T01	Cap., Feed Through
C501	21C45322G16	Cap., Ceramic 33pF
TC1	20C43248J01	Cap., Variable 50pF
E1	59C43354J01	Head, Playback Stereo
E2	1V42300P94	Assembly, D.C. Motor
J1	9C40957T09	Receptacle, Ant.
J2	1D40889P34	Assy., Fuse Receptacle

Symbol No.	Parts Number	Description
PL1	65A44395P01	Bulb Lamp
PL2	65C42954P05	Lamp Pilot
PL3	65B43447J01	Ind. Lamp
SW1	40B42262P01	Switch, AM/FM
SW2	18T42279U01	Switch, Power
SW3	40C40349J02	Switch, Tape/Radio
SW4	40C42625P02	Switch, Tape
R301	6C43205J07	Res., Metal 150 ohm ½W
VR101	18T42279U01	Tone
VR102	18T42279U01	Tone
VR103	18T42279U01	Volume
VR104	18T42279U01	Volume
VR105	18T42279U01	Balance
W1	30A43014P15-400	C.W.V.
W2	30A43014P14-400	C.W.V.
W3	30A43014P16-400	C.W.V.

Main Assembly Parts

Symbol No.	Parts Number	Description
1	1U42000U74	Cassette Deck
2	15C44853P01	Cover, Top
3	7B42480P02	Chassis, Cover
4	14A44955P01	Insulator, Fiber
5	52A42285U01	Arm, Pointer
6	36B40158U02	Knob, Eject
7	36B40159U02	Knob, FF
8	36B41331U02	Knob, SK
9	3S44205G05	Screw, Tap Tite (M3 x 5)
10	3S40011G58	Screw, Machine (M2.6 x 3)
11	3C40014G24	Screw, Machine W (M3 x 10)
12		— Not Used —
13		— Not Used —
14	7B41485P01	Bracket, Switch
15	3S40011G97	Screw, Machine (M2 x 2)
16	3S40011G83	Screw, Machine (M3 x 3)
17	30S43803G04-500	Dial Cord
18	49A43494J03	Pulley
19	41A43445J02	Spring, Dial
20	4S40070G22	Washer (2.6 x 7.5 x 0.5)
21	1V41500U18	Assembly, Pre-Main Amp Panel
22	7A44862P01	Bracket, IC Mounting

Symbol No.	Parts Number	Description
23	7B44861P01	Bracket, Amp
24	3S40018G01	Screw, Tapping (M3 x 6)
25	47B42282U01	Shaft, Tunner
26	7A44863P01	Bracket, Heat Sink
27	3S40011G15	Screw, Machine (M3 x 10)
28	47B42283U01	Shaft, Bush
29	4A43243P01	Washer, Dog
30	27D42721U01	Chassis, Base
31	84A40174U01	Panel, Lamp
32	3S40011G69	Screw, Machine (M2 x 4)
33	61A41122P01	Lens
34	4C42091G06	Washer, "C"
35	7B40078U01	Bracket, Trimmer
36	43A43478J01	Bushing
37	4C42091G04	Washer, "C"
38	49A43494J01	Pulley
39	4C42091G05	Washer, "C"
40	64C40156U01	Back Scale Indicator
41	14A42215J07	Insulator Fiber
42	15D40154U03	Nose Piece
43	34C40155U03	Dial Scale
44	61A42788J03	Lens
45	15B41173P02	Cover, Dust (Door)
46	41A40673U01	Spring, Dust Cover
47	47A43126J02	Shaft, Dust Cover
48	33A42284U01	Cover, Name
49	26A41899P05	Reflector Foil
50	45A43033P01	Arm, Orudamu
51	77T42412U01	Tuner Unit
52	1V41500U19	Assembly, MPX Panel
53	37S44468G19-80	Tube, Vinyl
54		– Not Used –
55	84A43115U01	Panel, Volume
56	2S40000G20	Nut, Hexagon
57	45A43352P01	Arm, Orudamu

Packing Assembly Parts

Symbol No.	Parts Number	Description
101	1V41500U21	Assy., Pamphlet
101-1	68P44360P78	Owner's Manual
101-2	56B40230G12	Sack, Polyethylene
102	1B42338P10	Assy., Face Plate
102-1	33C42339P05	Face Plate
102-2	56B40230G04	Sack, Polyethylene
103	54B42124G02	Label
104	42B40994G05	Strap, Receiver Mtg.
105	56B40230G22	Sack, Polyethylene
106	56C43246P20	Carton Packing (Ind.)
107	56D44156P01	Tray, Packing
108	56D44156P02	Tray, Packing
109	56D44156P03	Tray, Packing
110	56A42069P02	Pad, Packing
111	1A44177U01	Assy., Knob Control
111-1	1B43982P01	Knob, Control (A)
111-2	36B43986P02	Knob, Control (B)
111-3	56B40230G11	Sack, Poly.
112	1V41500U55	Assy., Kit Installation
112-1	4S40072G11	Washer, Tooth Lock (M5)
112-2	4S40070G08	Washer, Flat (5.5 x 12 x 0.8)
112-3	3S40012G39	Scr., Tpg. (M5 x 20)
112-4	4S40070G10	Washer, Flat
112-5	2S40000G20	Nut, Hex. (M9 x 0.75)
112-6	3A43315G03	Scr., Mch. (M5 x 20)
112-7	2S40000G13	Nut, Hex. (M5 x 0.8)
112-8	65A40348G01	Fuse (5A)
112-9	45K538873	Arm Adaptor
112-10	56B40230G27	Sack, Polyethylene
112-11	9A60992A01	Connector
113	56C43245P20	Carton Bulk Packing
114	56A43276P01	Pad Packing

Cassette Mechanism Assembly Parts

Symbol No.	Parts Number	Description
201	1C41297P01	Assembly, Rivet Mechanism Chassis
202	1C41304P01	Assemlby, Cassette Chassis
203	1B41306P01	Assembly, FF Lever
204	1B41311P01	Assembly, Lock Plate
205	1B41313P01	Assembly, Rivet Head Chassis
206	1B41207P02	Assembly, Pinch Roller
207	1B41287P01	Assembly, Take Up Reel
208	1A42755P01	Assembly, Rivet Flywheel Bracket
209	49C41286P01	Assembly, Flywheel
210	45B40546J03	Cam, Pause
211	41A41303P01	Cam, Spring
212	4S40070G36	Washer; Flat Metal
213	4C42091G11	Washer, "C" (ETWJ-25)
214	41A41041P01	Spring, Pinch Roller
215	4C42091G05	Washer, "C" (ETWJ-2)
216	4S40070G35	Washer, Flat

Symbol No.	Parts Number	Description
217	41B40525P02	Spring, Push (Azimuth)
218	4S40070G05	Washer, (3.3 x 8 x 0.5)
219	3S40019G06	Screw, F-Locks (M2 x 6, Azimuth)
220	30C42634J06	Cut, Shield Wire
221	7B40787P02	Bracket, Tape/Radio Switch
222	4S40075G24	Washer, (S.T.W.)
223	3S40011G87	Screw, Machine (M2 x 8)
224	45A42654P01	Stopper, Cassette
225	46A42655P01	Arm, Cassette Stopper
226	43A41307P01	Spacer, Capstan
227	4A41345P01	Washer, Lock
228	3S40014G12	Screw, Machine (M2.6 x 4 W/C)
229	64A40789P01	Plate, Eject
230	4C42091G04	Washer, "C" (ETWJ-3)
231	41B40524P09	Spring, Pull
232	45B41301P01	Lever, Eject
233	4S40075G18	Washer, (S.T.W.)
234	4A41252P02	Washer, Slide
235	3S44205G01	Screw, Tap Tite (M3 x 6)
236	43A41182P03	Ball, Steel
237	45B40913P02	Arm, Auto Stop Lever
238	41A41359P01	Spring, Limitter
239		– Not Used –
240	3S40019G17	Screw, Machine (M2.3 x 10) F-Lock
241	4S40075G07	Washer, (PS)
242	42B40242P01	Belt, Drive (Pulley)
243	42B40242P03	Belt, Drive (Motor)
244	3S40011G24	Screw, Machine (M2.6 x 6, Flat)
245	41A41296P01	Spring, Side
246	3S40011G96	Screw, Machine (M2.3 x 3)
247	41B40524P07	Spring, Pull
248	41B40524P12	Spring, Pull
249	41B40524P13	Spring, Pull