SERVICE MANUAL

HI-POWER AUTO REVERSE CASSETTE CAR STEREO

(12 VOLT D.C. NEGATIVE EARTH)

MODEL CK-2000

ALPINE ELECTRONICS INC.

CONTENTS

SPECIFICATION 1
PARTS LOCATION 2
DISASSEMBLY 3
HEAD AZIMUTH ADJUSTMENT 5
TROUBLESHOOTING 7
BLOCK DIAGRAM 8
SCHEMATIC DIAGRAM 9
WIRING DIAGRAM 10
PRINTED CIRCUIT BOARD
- PRE-DOLBY P.C.B. 11
- MAIN AMP P.C.B. 12
- CONTROL P.C.B. 13
- AUTO REVERSE P.C.B. 14
- LEAD SWITCH P.C.B. 14
- SWITCH P.C.B. 15
- FADER P.C.B. 15
- LED P.C.B. 15

CABINET EXPLODED VIEW 16
DECK MECHANISM EXPLODED VIEW 17
SEMICONDUCTOR LEAD IDENTIFICATION 18
PARTS LIST 19
PACKING METHOD 22

SPECIFICATIONS

1. TAPE PLAYER

Tape Speed	:	1-7/8 inch $^{+3\%}_{-2\%}$
Wow and Flutter	:	0.25%
FF/REW Time	:	100 sec.
Take Up Torque	:	35 – 70g

2. AMP PLAYER

S/N Ratio	:	47dB
Crosstalk	:	30dB
Distortion at 4W Output	:	4%
Frequency Response	:	125Hz (±2dB) ~ 8kHz (±3dB)
Tone Control Effect		
Bass	:	±3dB at 125Hz
Treble	:	±3dB at 6.3kHz
Loudness Control Effect	:	±3 dB at 125Hz ±3 dB at 6.3kHz

3. GENERAL

Power Supply	:	D.C. 13.8V
Output Power	:	12W Limit
Load Impedance	:	4Ω
Semiconductors	:	5 ICs, 12 Transistors, 16 Diodes, 4 L.E.D.s
Dimensions	:	185 (W) x 67 (H) x 168 (D) mm
Weight	:	kg

PARTS LOCATION

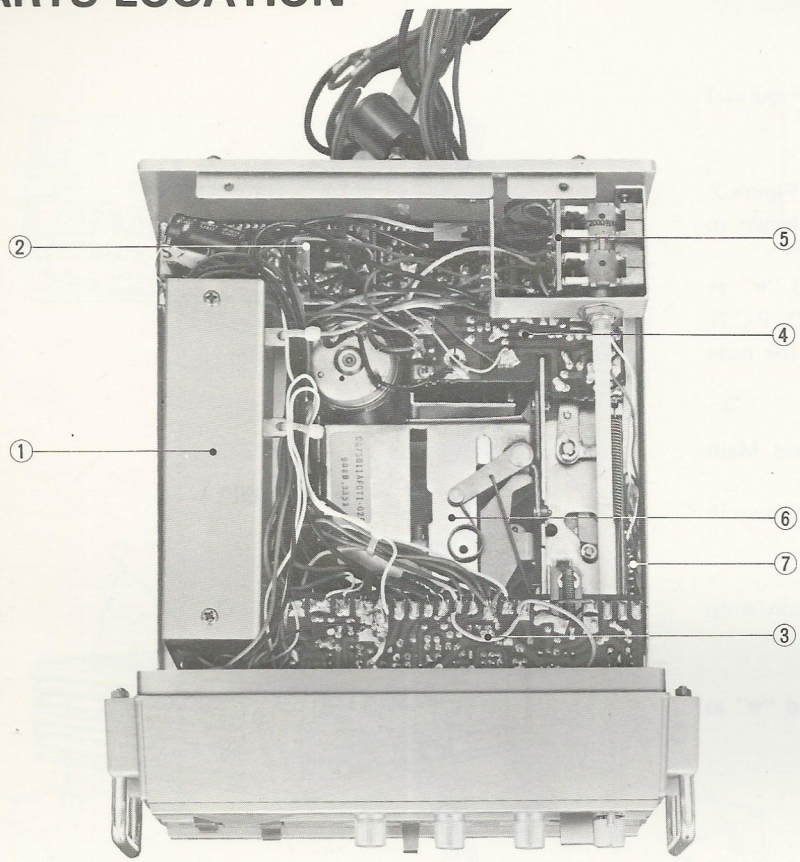

① Pre-Dolby P.C.B. Assembly
② Main Amp P.C.B. Assembly
③ Control P.C.B. Assembly
④ Auto Reverse P.C.B. Assembly
⑤ Fader P.C.B. Assembly
⑥ Deck Mechanism
⑦ Switch P.C.B. Assembly

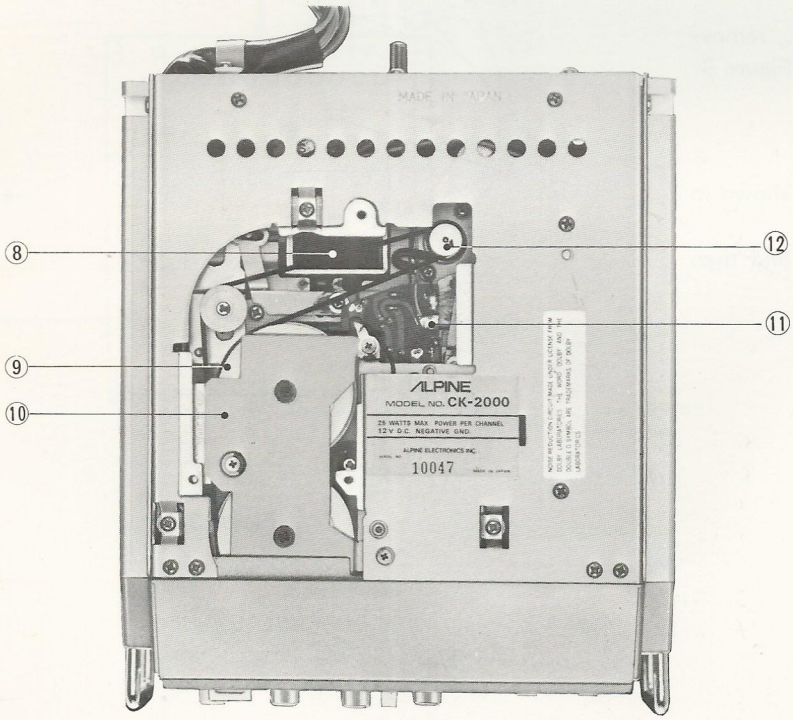

⑧ Plunger Solenoid
⑨ Flywheel
⑩ Bracket, Flywheel
⑪ Lead Switch P.C.B. Assembly
⑫ Motor

DISASSEMBLY

1. **Removal of Top Cover**
   Remove six screws marked "○" as shown in Figures 1 and 2.
2. **Removal of Nose Piece**
   (1) Pull out nose piece knobs as shown in Figure 2.
   (2) Remove six screws marked "△" as shown in Figures 1, 2, and 3.
   (3) Remove four screws marked "□" and "★" as shown in Figure 4, and then the L.E.D. P.C.B. and level meter can be removed from the nose piece.
   (4) Disconnect all wires from the P.C.B.
3. **Removal of Rear Cover, Volume P.C.B. and Main Amp P.C.B.**
   (1) Remove eleven screws marked "◎" as shown in Figures 3 and 5.
   (2) Disconnect all wires from the P.C.B.
   (3) The rear cover, volume P.C.B. and Main Amp P.C.B. can be removed.
4. **Removal of Control P.C.B.**
   (1) Remove four nuts and washers marked "●" as shown in Figure 6.
   (2) Disconnect all wires from the P.C.B..
   (3) The control P.C.B. can be removed.
5. **Removal of Pre-Dolby P.C.B.**
   (1) Remove two screws marked "■" as shown in Figure 6.
   (2) Disconnect all wires from the P.C.B.
   (3) Remove two screws marked "★" as shown in Figure 3.
   (4) The pre-Dolby P.C.B. can be removed.
6. **Removal of Switch P.C.B.**
   (1) After removing the pre-Dolby P.C.B., remove four screws marked "▲" as shown in Figure 6.
   (2) Disconnect all wires from the P.C.B..
   (3) The switch P.C.B. can be removed.
7. **Removal of Cassette Deck**
   (1) Remove three screws marked "*" as shown in Figure 3.
   (2) Slide the cassette deck to backward and then the cassette deck can be removed.

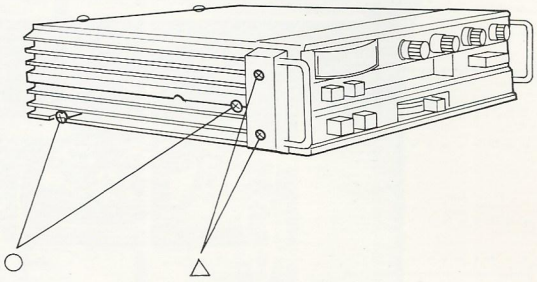

Figure 1

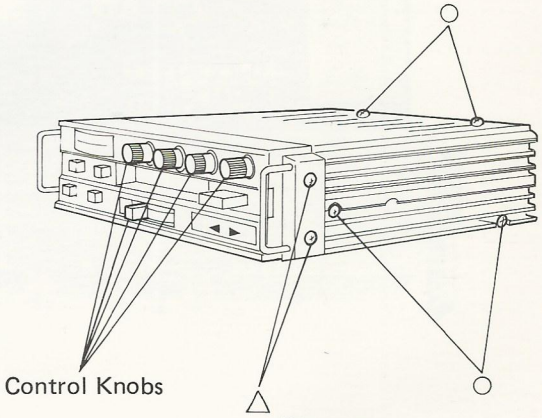

Figure 2

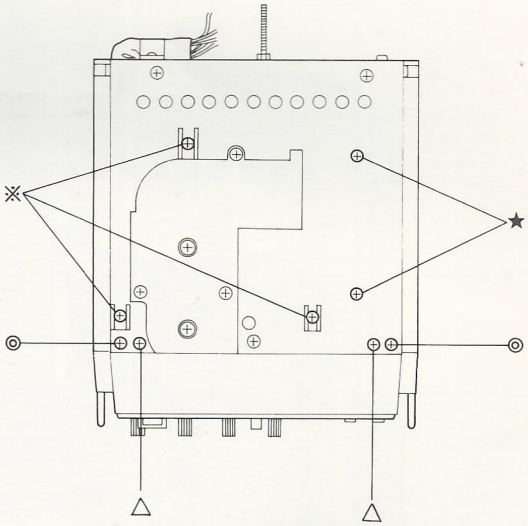

Figure 3

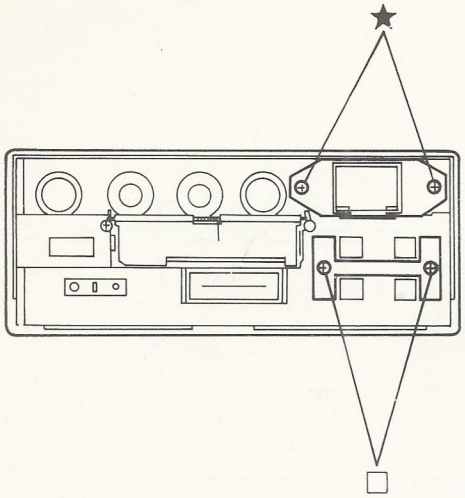

Figure 4

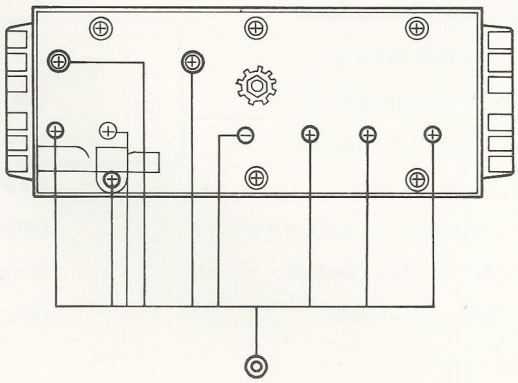

Figure 5

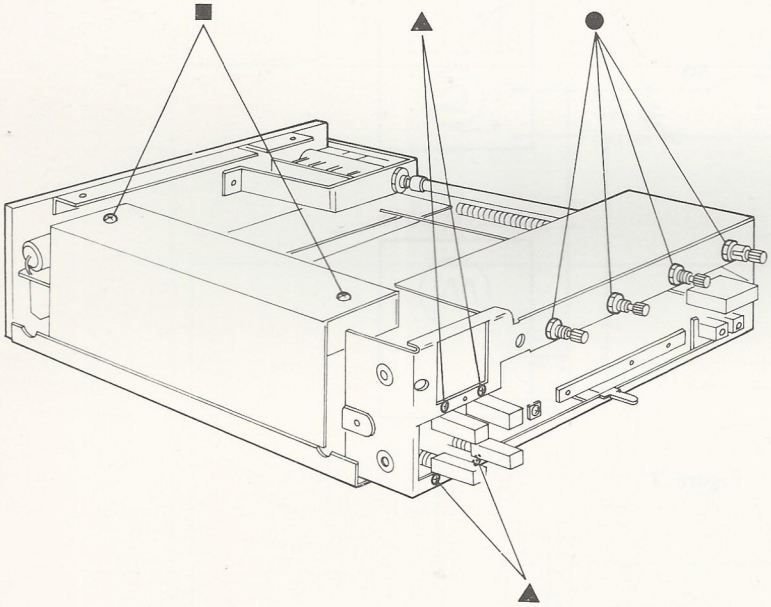

Figure 6

HEAD AZIMUTH ADJUSTMENT

Alignment Procedure

(1) Control Setting

Booster Switch	ON
Tape Select Switch	OFF
Dolby Switch	OFF
Loudness Switch	OFF
Bass/Treble Control	Detent
Balance Control	Detent

(2) Connection

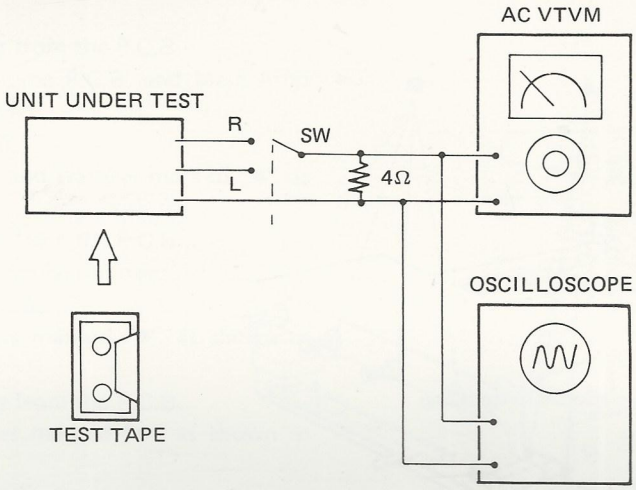

Figure 7

(3) Procedure

Step	Description	Test Tape	Adjust Point	Connection Instruction	Remarks
1	Head Azimuth Adjustment	MTT-113C	Azimuth Screw	Figure 7 Figure 8	Adjust for max.
2	Output Level Adjustment	MTT-112	Volume (VR203)	Figure 7	Adjust for 1.4V
3	Power Level Meter Adjustment	MTT-112	VR301	Figure 7 Figure 10	Adjust Level Meter reading "1" W
4	Dolby Level Adjustment	Dolby Level Tape	VR101 VR102	Figure 9 Figure 11	T.P. 1, T.P. 2 Dolby on Adjust for 580mV

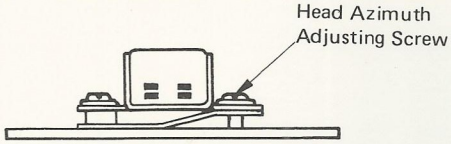

Figure 8

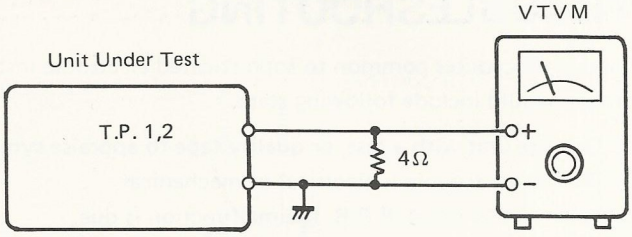

Figure 9

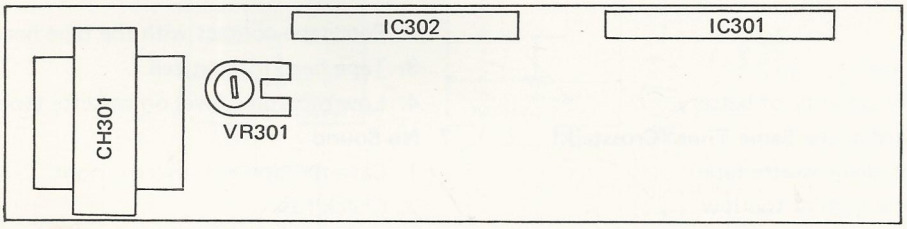

Figure 10

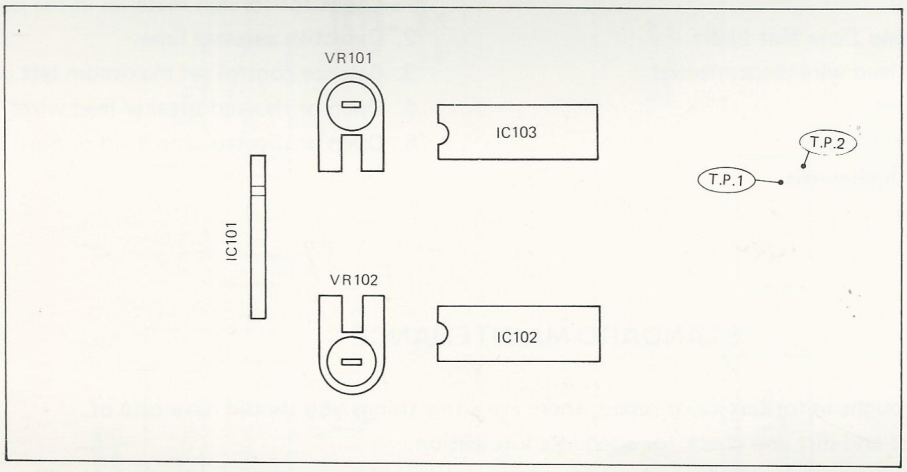

Figure 11

TROUBLESHOOTING

Service procedures common to sophisticated electronic instrument is applicable to this unit. In general, a carefully approach would include following steps.

1. Operate unit with a test, or quality tape to appraise symptoms.
2. Determine trouble is electrical or mechanical.
3. Ascertain to which P.C.B. the malfunction is due.
4. Checkout voltage distribution at IC's and transistors.
5. Pinpoint defective section and replace defective component(s).

SERVICE HiNTS

1. **Blown Fuse**
   1. Shorted power wire
   2. Wrong voltage or polarity of battery
2. **Two Programs Heard at the Same Time (Crosstalk)**
   1. Improperly recorded cassette tape
   2. Tape head set too high or too low
3. **Motor Inoperative**
   1. Check lead wires to motor
   2. Open armature in motor
4. **Excessive Wow and Flutter**
   1. Defective cassette tape
   2. Defective motor
5. **Tape Indicator Lamp Dose Not Light**
   1. Lamp terminal lead wire disconnected
   2. Lamp burned out
   3. Defective switch (S401)
6. **Low Sound in Both channels**
   1. Dirty tape head
   2. Poor tape contact with the tape head
   3. Tape head magnetized
   4. Low recording level on cassette tape
7. **No Sound**
   1. Cassette tape not inserted right
   2. Check fuse
   3. Open power source lead wire
   4. Open ground
   5. Defective tape head
   6. Defective IC
8. **No Sound in One or Both Channels**
   1. Check for foreign material in the cassette tape
   2. Defective cassette tape
   3. Balance control set maximum left or right
   4. Open or shorted speaker lead wires
   5. Open or shorted tape head or head lead wire

STANDARD MAINTENANCE

Whenever a unit is brought in for service or repair, there are a few things you should have care of.
Always check for dust and dirt and check for adequate lubrication.
The tape head and tape contacting surfaces should be cleaned thoroughly to assure proper tape handling and frequency response.
Use a cotton swab dipped in head cleaner or denatured alcohol to clean the face of the head and all tape contacting surfaces. Wipe dry with a lint-free cloth.
Do not use magnetized tools close to tape head, or they may magnetize the head. After long periods of use, the head will retain a small amount of residual magnetism. A magnetized head will invite noise and loss of high-frequency response. Use a tape head demagnetizer, and follow the instructions supplied with it.

BLOCK DIAGRAM

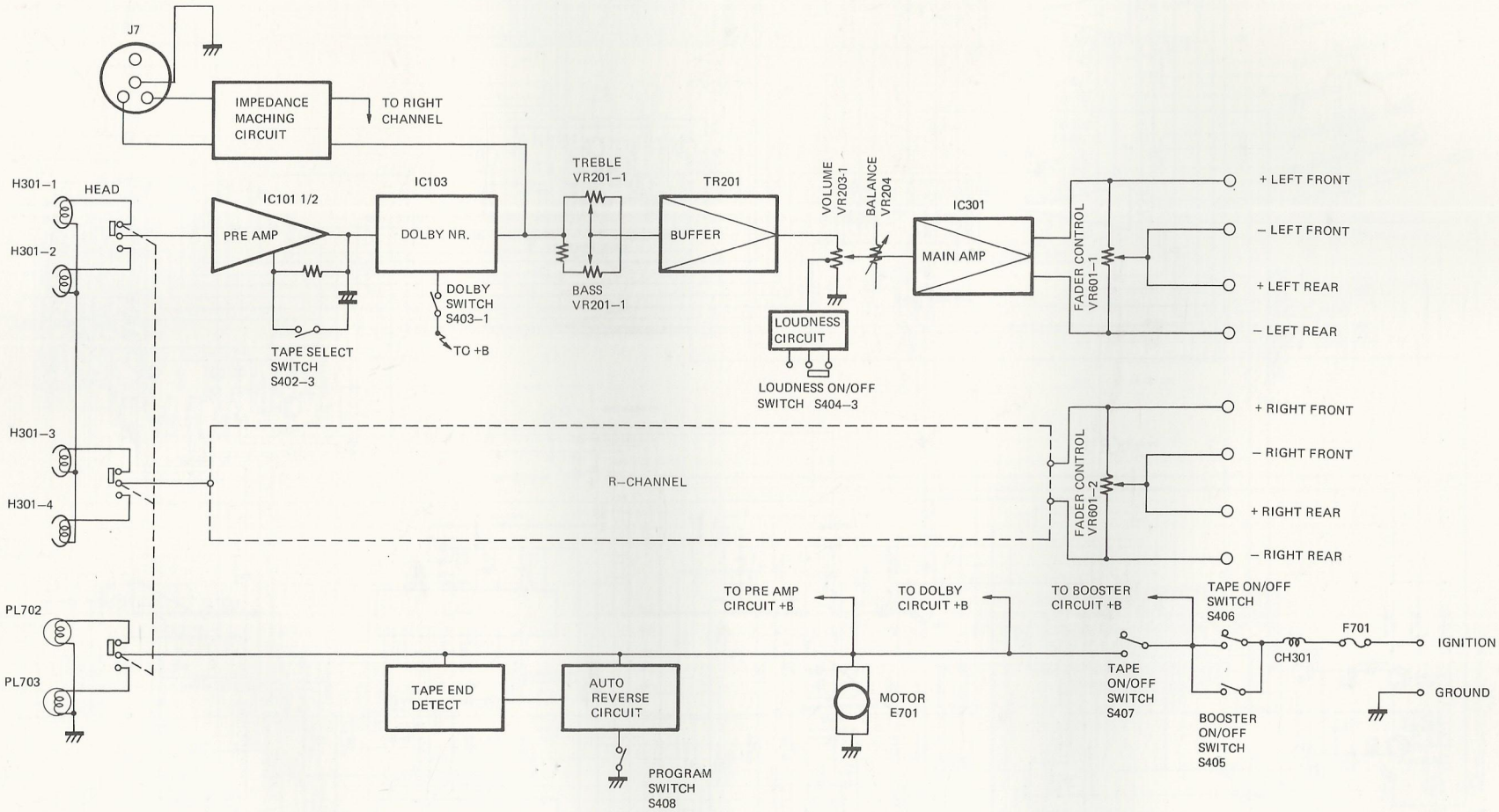

SCHEMATIC DIAGRAM

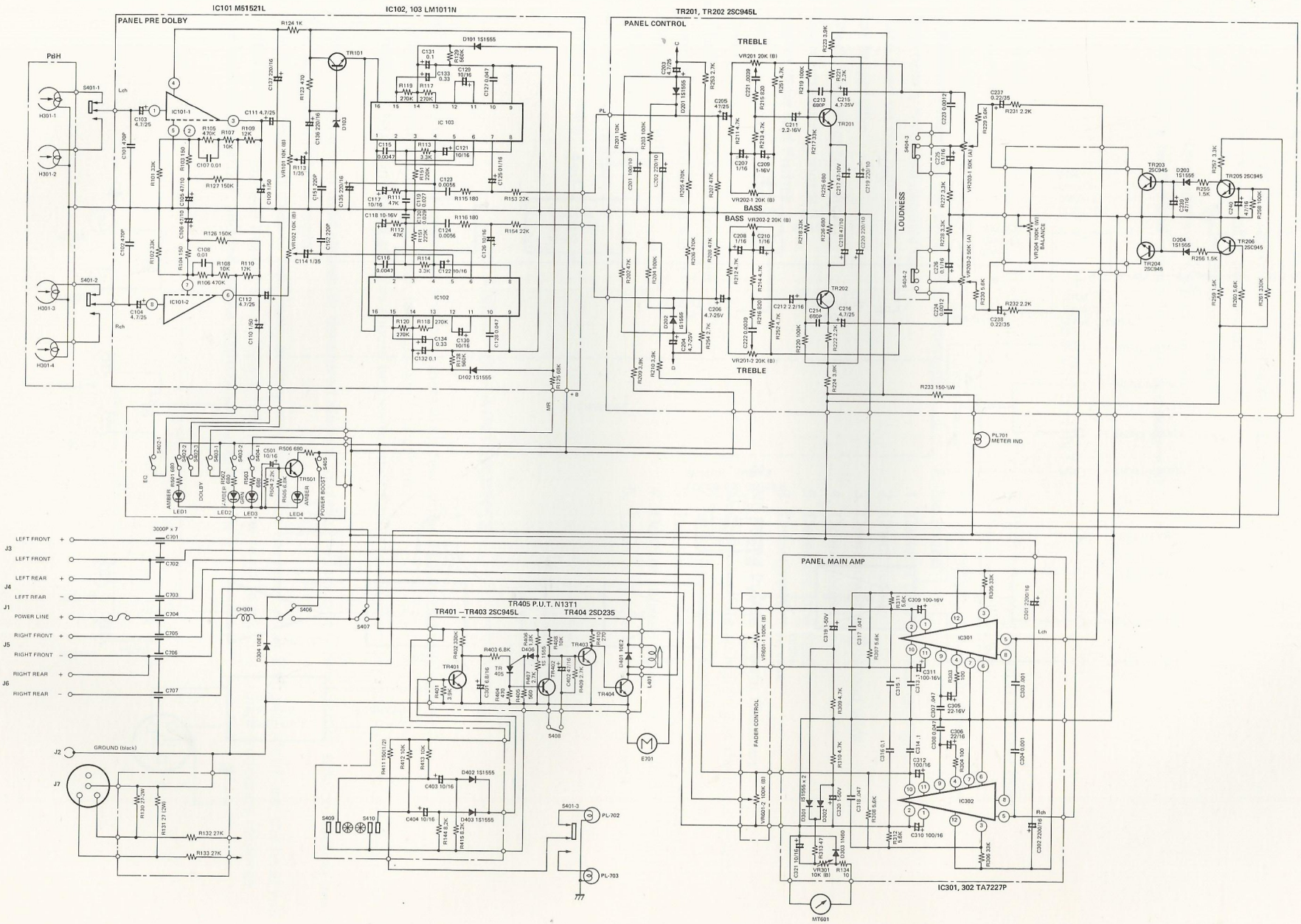

WIRING DIAGRAM

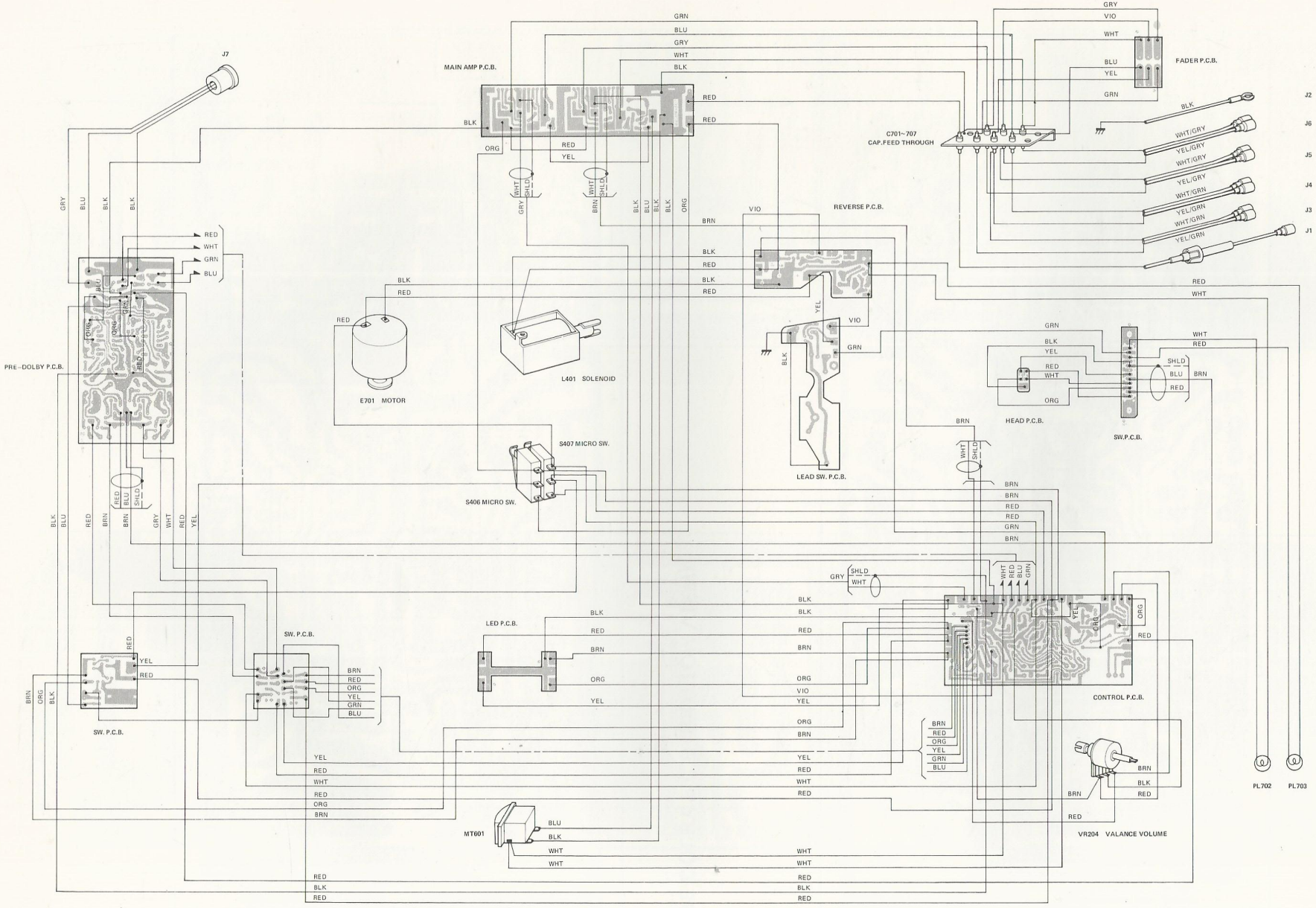

PRINTED CIRCUIT BOARD

PRE-DOLBY P.C.B. (TOP VIEW)

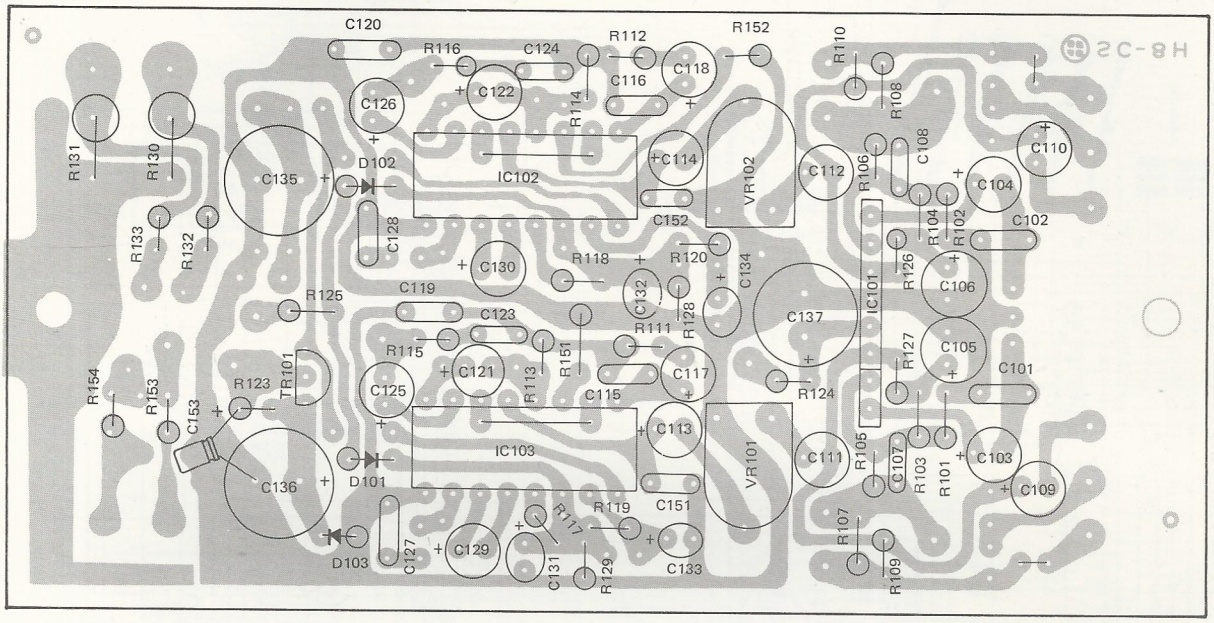

PRE-DOLBY P.C.B. (BOTTOM VIEW)

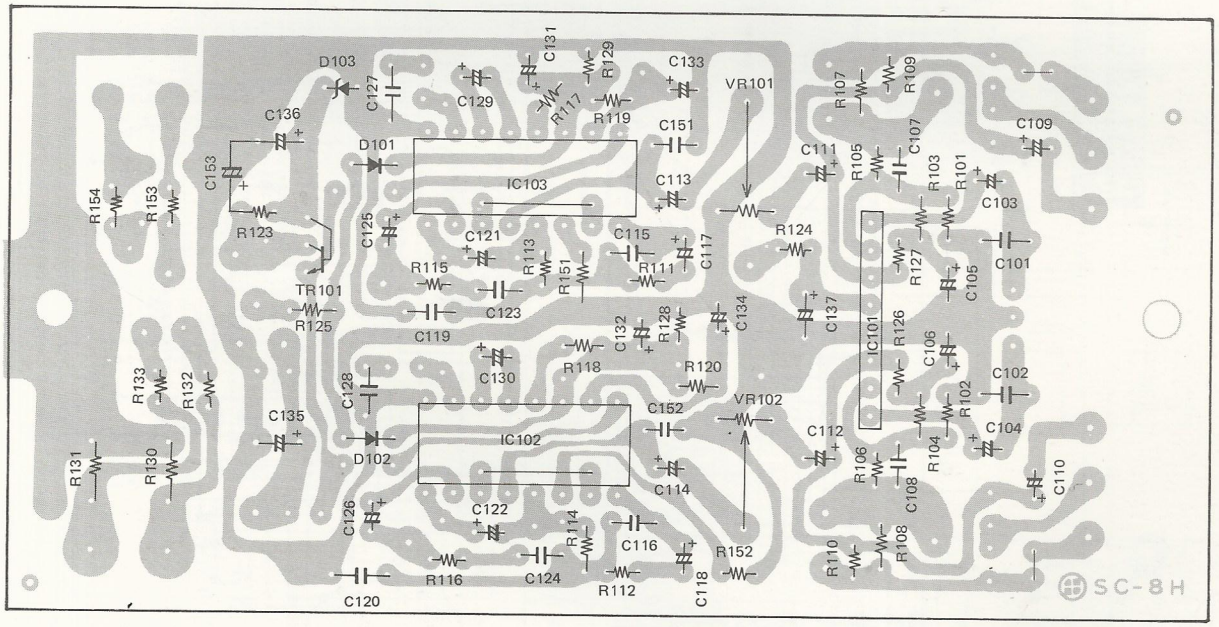

MAIN AMP P.C.B. (TOP VIEW)

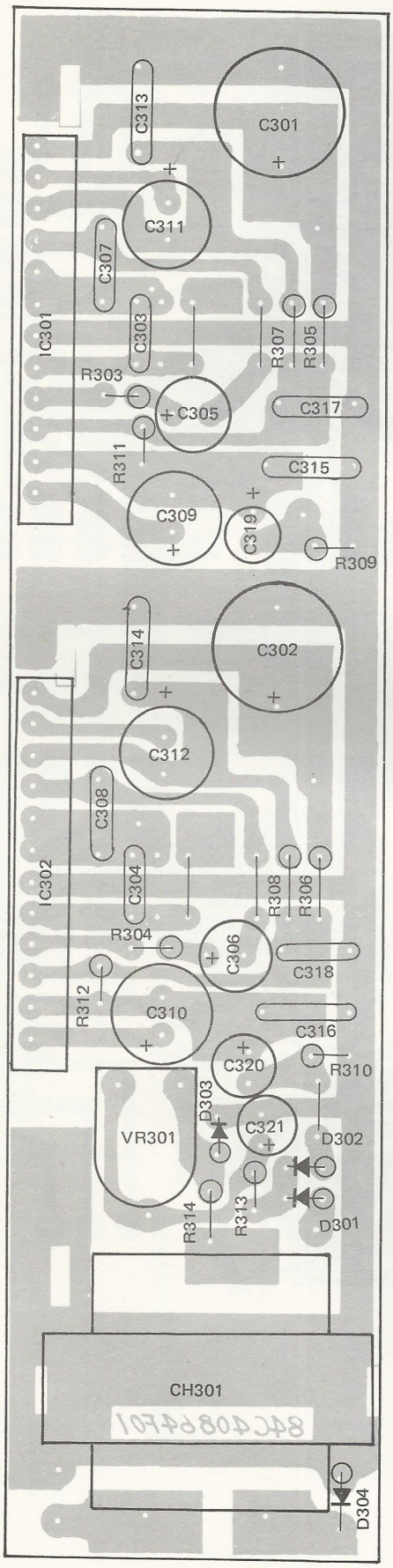

MAIN AMP P.C.B. (BOTTOM VIEW)

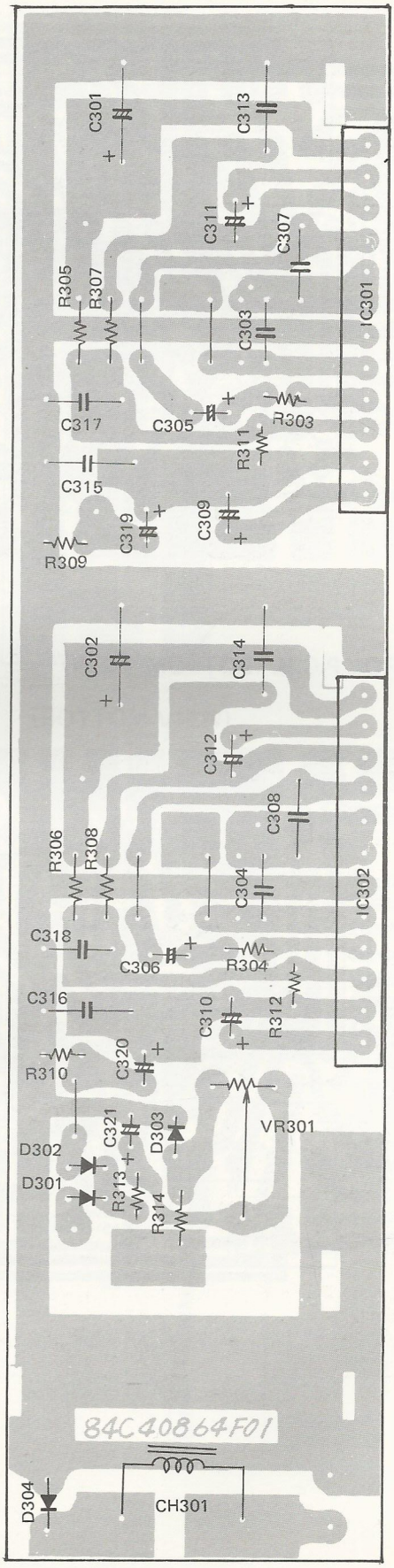

CONTROL P.C.B. (TOP VIEW)

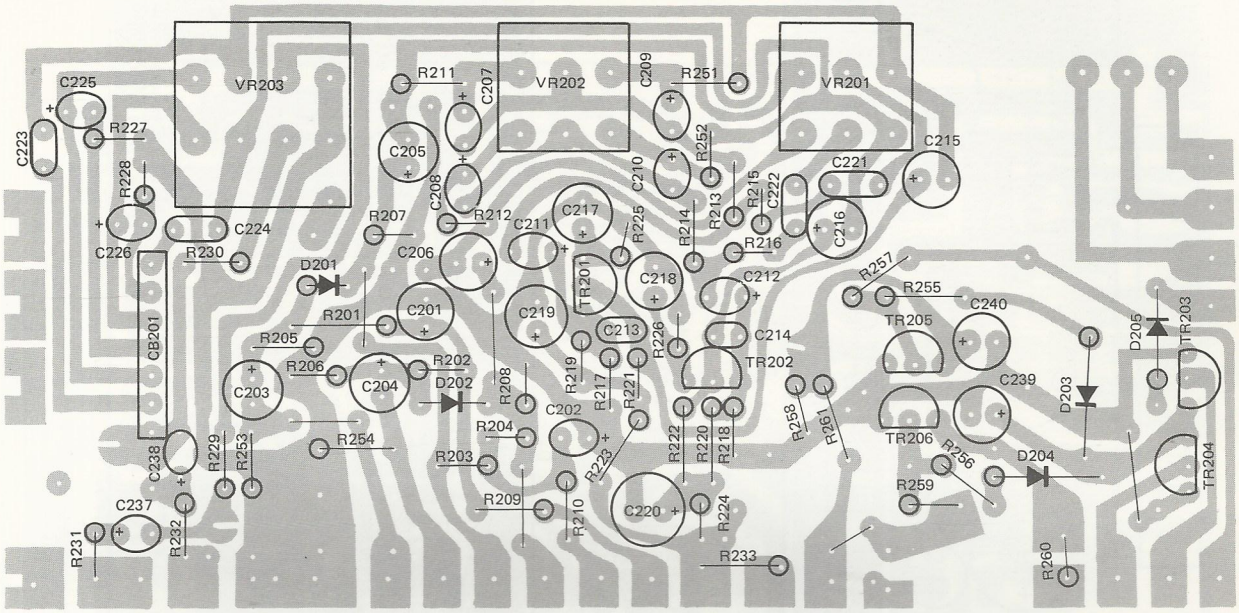

CONTROL P.C.B. (BOTTOM VIEW)

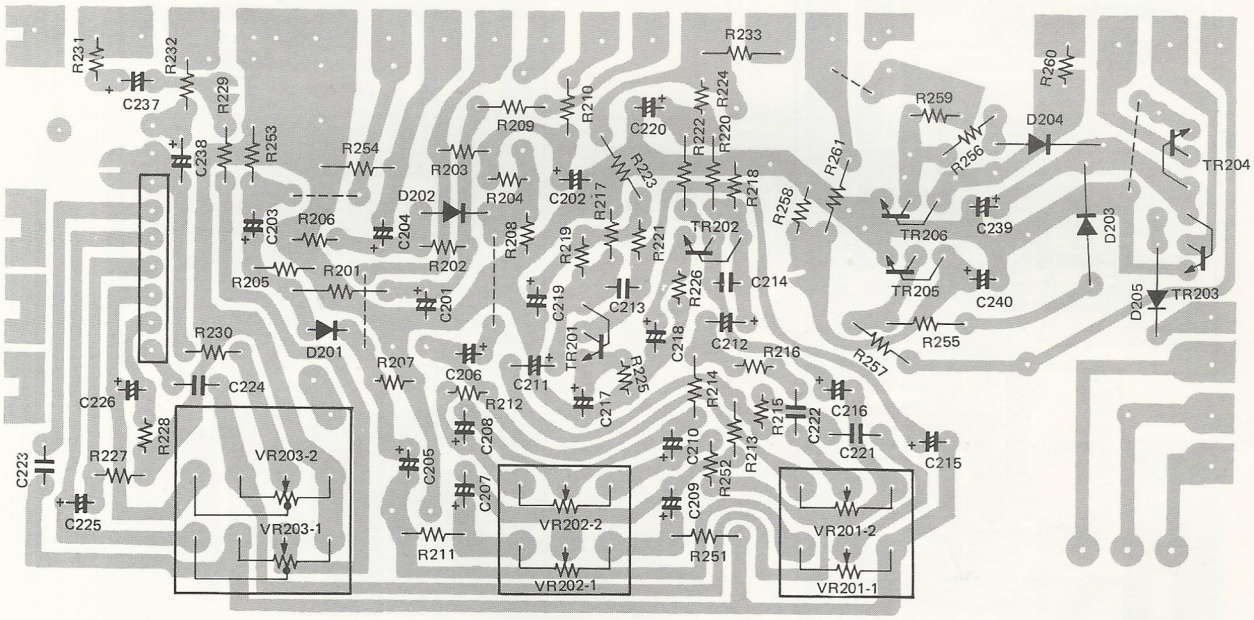

AUTO REVERSE P.C.B.

(TOP VIEW)

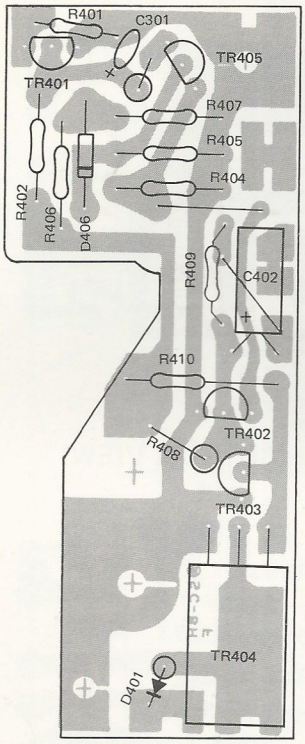

(BOTTOM VIEW)

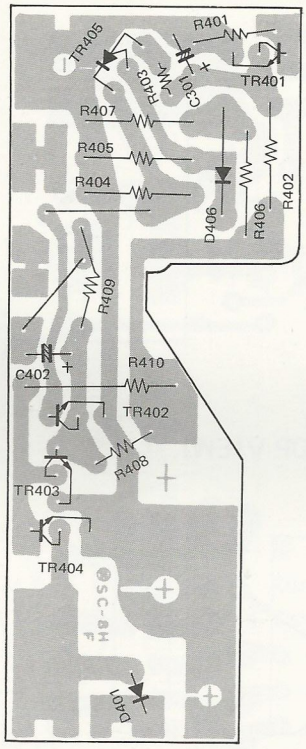

LEAD SWITCH P.C.B.

(TOP VIEW)

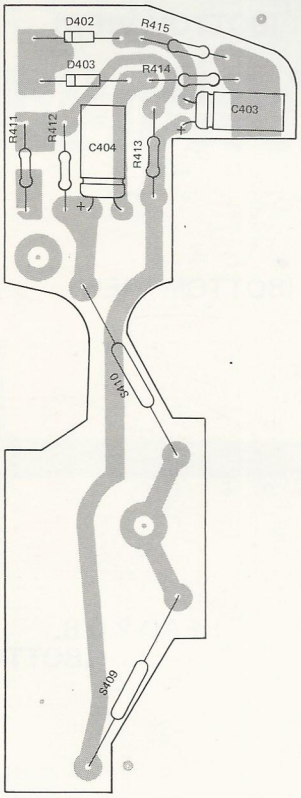

(BOTTOM VIEW)

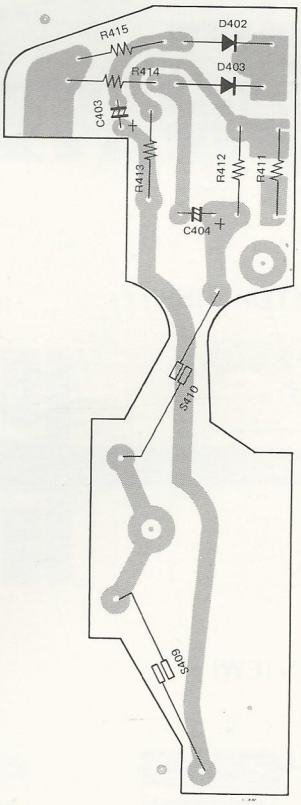

SWITCH P.C.B.

(TOP VIEW)

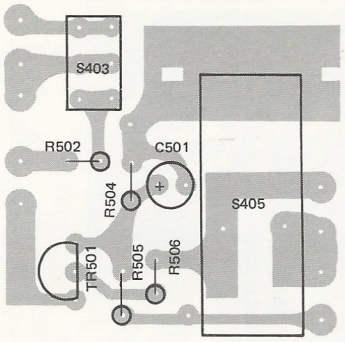

(BOTTOM VIEW)

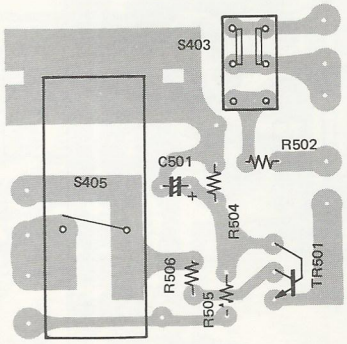

SWITCH P.C.B.

(TOP VIEW)

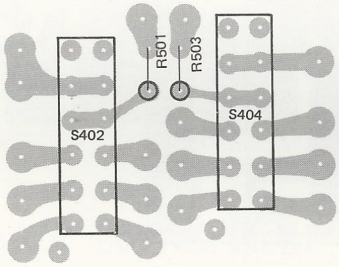

(BOTTOM VIEW)

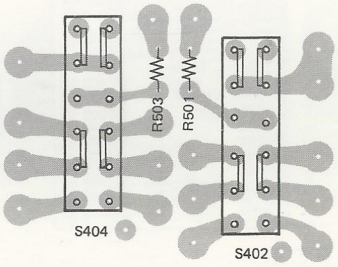

SWITCH P.C.B.

(TOP VIEW)

(BOTTOM VIEW)

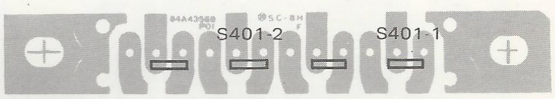

LED P.C.B.

(TOP VIEW)

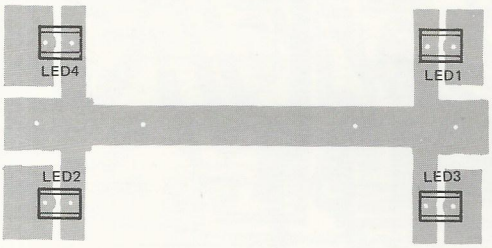

(BOTTOM VIEW)

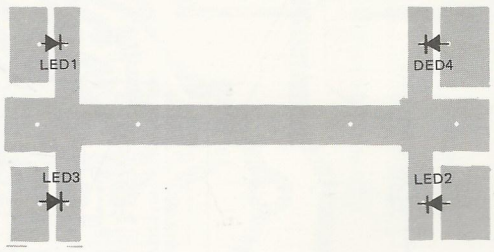

FADER P.C.B.

(TOP VIEW)

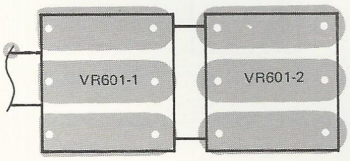

(BOTTOM VIEW)

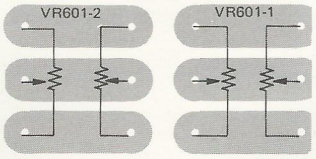

HEAD P.C.B.

(BOTTOM VIEW)

CABINET EXPLODED VIEW

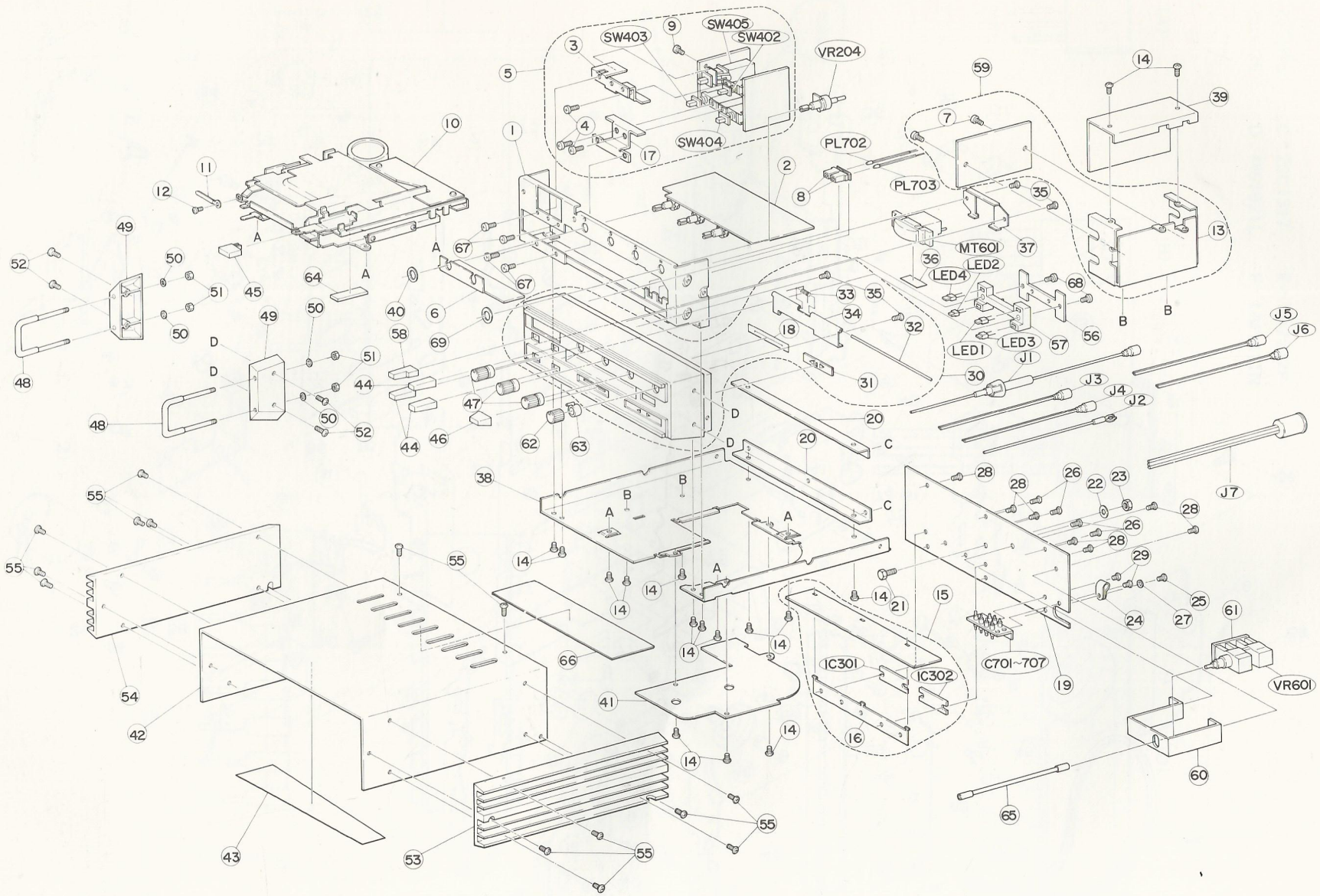

DECK MECHANISM EXPLODED VIEW

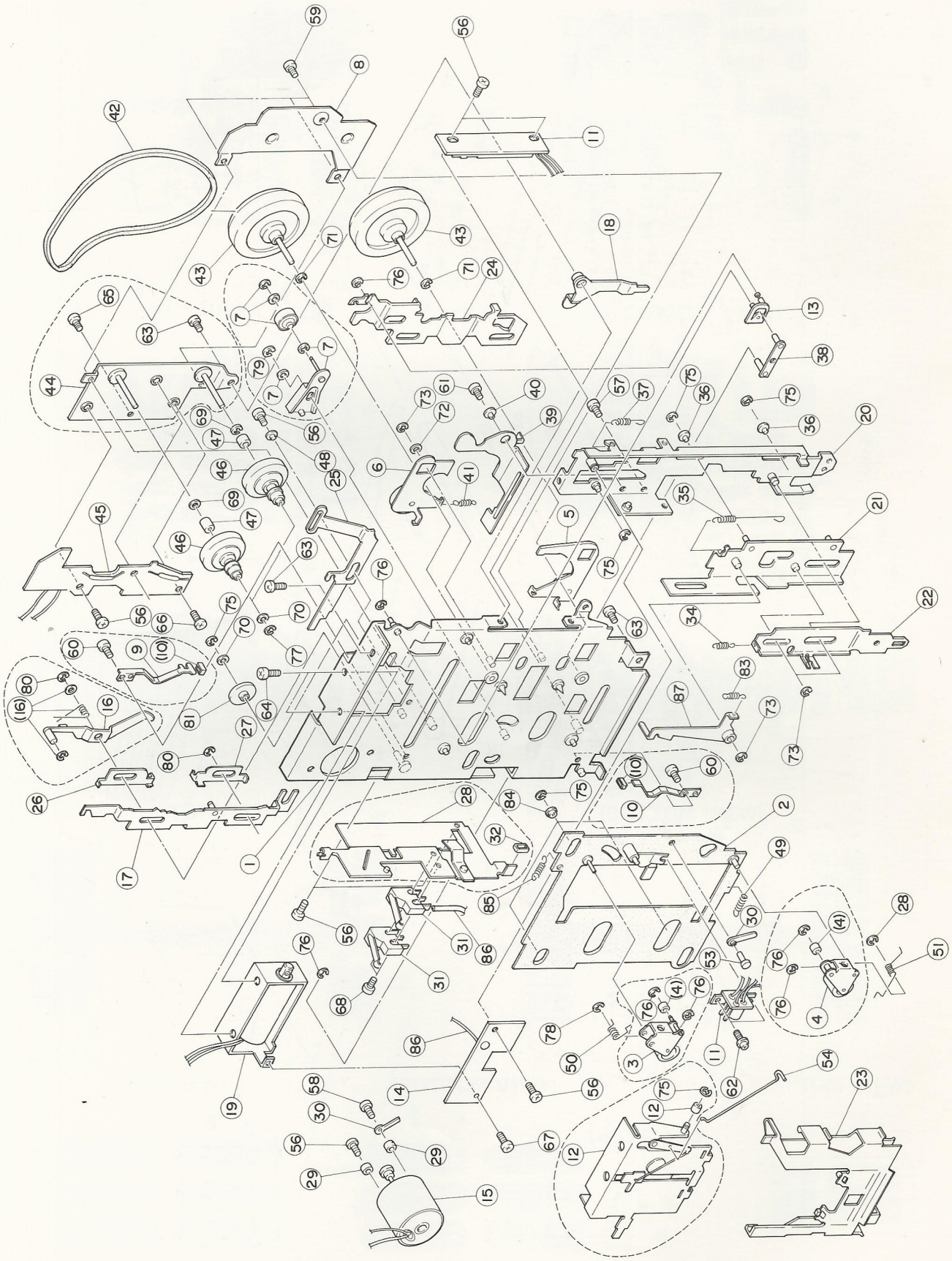

SEMICONDUCTOR LEAD IDENTIFICATION

A : 2SC945 C : 2SC1317 E : TA7227P
B : 2SD235 D : M51521L F : LM1011N

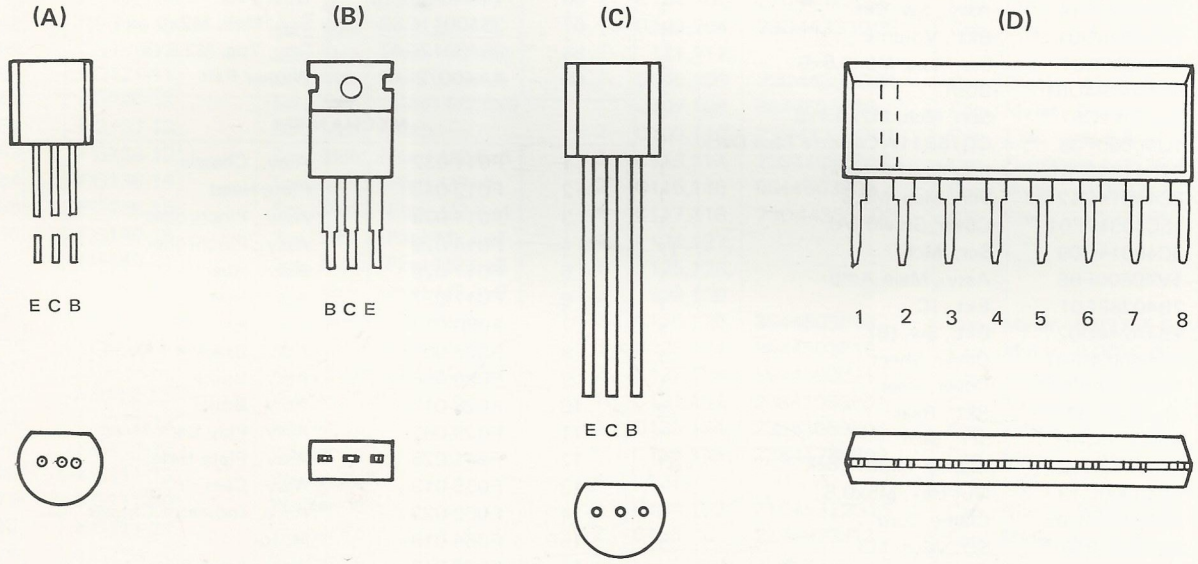

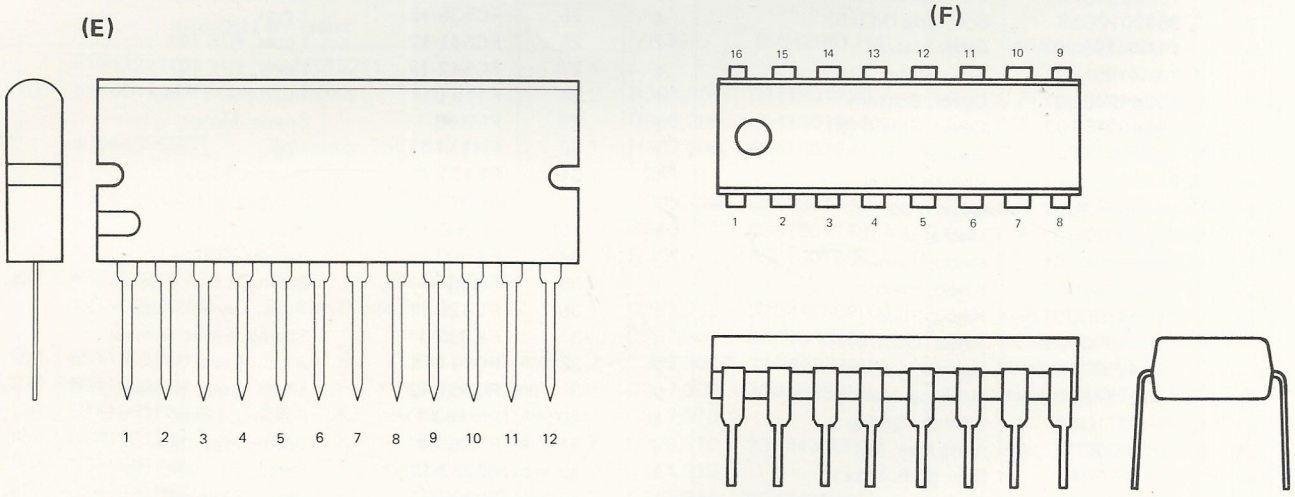

PARTS LIST

SYMBOL NO.	PART NO.	DESCRIPTION	Q'TY
		CABINET	
1	27D40477F01	Assy., Front Chassis	1
2	1V40300F13	Assy. Control Panel	1
3	7B41882F01	Bkt., Sw.	1
4	3C40014G06	Scr., Mch. M2.6	3
5	1V40300F14	Assy., Sw. Bkt.	1
6	7A44245U01	Bkt., Volume	1
7	3S44205G01	Scr., Tpg. M3x0.5x6	2
8	43A44194U01	Bush	2
9	3S40011G57	Scr., Mch. M2x0.4x5	1
10	1U40000F38	CG75B11A Cassette Tape Deck	1
11	29C41045P01	Lug Wrap Around	1
12	3C40014G12	Scr., Mch. M2.6	1
13	15C40317F01	Cover, Shield (A)	1
14	3C40014G09	Scr., Mch.	17
15	1V40800F86	Assy., Main Amp	1
16	7B40288F01	Bkt., IC	1
17	7B44244U02	Bkt., Sw. (B)	1
18	15A40938F01	Cover, Sheet	1
19	15B40079F01	Cover, Rear	1
20	7A44191U01	Bkt., Rear	2
21	3A43315G03	Scr., Mch.	1
22	4S40072G12	Washer Tooth Lock	1
23	2S40000G13	Nut Hex. M5x0.8	1
24	42B41424G05	Clamp Cord	1
25	3S43997P10	Scr., Mch. M3	1
26	3S40011G22	Scr., Mch. M3x0.5x12	4
27	4S40070G05	Washer 3.3x8x0.5	1
28	3C40014G22	Scr., Mch. M3x8L	7
29	3C40014G20	Scr., Mch. M2.6x7	2
30	13C40331F01	Assy., Nose Piece	1
31	61A40184T01	Lens Indicator	1
32	47A43599P04	Shaft Cover Dust	1
33	41A44184U01	Spring Door	1
34	15B42540F03	Cover Dust	1
35	3S40012G58	Scr., Tpg (M2x5)	4
36	14A44186U01	Fiber Meter	1
37	7A44195U01	Bkt., Meter	1
38	15C44242U01	Cover, Bottom	1
39	15C40317F02	Cover, Shield (B)	1
40	4A40072F01	Washer, Felt	1
41	27A44188U01	Chassis Cover	1
42	15C44243U02	Cover Top	1
43	14B43672U02	Insulator Fiber	1
44	36B44196U01	Knob, Push	3
45	36B43346U01	Knob, Eject	1
46	36B44190U01	Knob, Slide	1
47	36B44570P03	Knob, Control F	3
48	55A42372U02	Handle, Carring	2
49	15B42373U02	Housing, Handle	2
50	4S40071G05	Washer, Spring	4
51	2S40000G37	Nuts Hex. M3	4
52	3S43997P45	Scr., Mch. M3x16	4
53	7B42616U03	Bkt., Heat Sink (R)	1
54	7B42616U04	Bkt., Heat Sink (L)	1
55	3S43997P47	Scr., Mch. M3x5	14
56	84B40414F01	Panel LED	1
57	9B40334F01	Socket LED	1
58	36B40335F01	Knob, Push	1
59	1V40300F16	Assy., Pre-Dolby Panel	1
60	7B40339F01	Bkt., Volume	1
61	84A40352F01	Panel, Fader	1
62	36B40337F01	Knob, Front	1
63	36B40336F01	Knob, Back	1
64	43A44610J03	Spacer Holder	1
65	44B44124U01	Worm Joint	1
66	14A40454F02	Dust Top	1
67	3S40011G33	Scr., Mch. M2x0.4x4	4
68	3S40012G47	Scr., Tpg. M2.6x8	2
69	4A40072F02	Washer Felt	1
		MECHANISM	
1	F011-032	Assy., Chassis	1
2	F012-043	Plate Head	1
3	F014-028	Assy., Pinchroller	1
4	F014-029	Assy., Pinchroller	1
5	F017-026	Assy., Idler	1
6	F017-027	Assy., Idler	1
7	F020-017	Assy., Arm FF	1
8	F026-020	Assy., Bracket Flywheel	1
9	F028-016	Assy., Brake	1
10	F028-017	Assy., Brake	1
11	F029-062	Assy., Play Back Head	1
12	F041-025	Assy., Plate Base	1
13	F055-013	Assy., Cam	1
14	F062-023	Assy., Indicator Chassis	1
15	F064-019	Motor	1
16	F066-013	Assy., Lock Plate	1
17	F072-012	Assy., Slide Plate	1
18	F098-013	Assy., Lever FF/REW	1
19	PGL1-701	Solenoid	1
20	F060-019	Assy., Lever	1
21	F114-011	Assy., Lever Eject	1
22	FC528-11	Lever, Eject	1
23	FC524-13	Holder, Cassette	1
24	FC525-14	Lever, Select	1
25	FC536-12	Lever	1
26	FC541-12	Lever, R/F (A)	1
27	FC542-12	Lever, R/F (B)	1
28	F115-011	Instrument Panel	1
29	FM198-11	Spacer Motor	2
30	FH111-11	Lug	2
31	FE121-13	Switch, Slide	2
32	FP267-11	Rubber Cushion	1
(10)	FP266-11	Rubber, Brake	2
34	FK262-11	Spring, Coil (A)	1
35	FK261-12	Spring, Lever Eject	1
36	FL429-11	Stud, Lever Eject	2
37	FK392-11	Spring, Lever Release	1
38	F049-016	Assy., Lever Select	1
39	FC531-12	Lever, Lock Release	1
40	FM183-11	Bearing, Lever	1
41	FK263-11	Spring Play Idler	1
42	FP252-12	Belt	1
43	FP378-13	Assy., Flywhell	2
44	F056-017	Assy., Reel Bracket	1
45	F042-030	Assy., Lead Switch Panel	1
46	FP253-11	Reel	2
47	EZ12D-00	Ring, Magnet	2
48	FM192-12	Bearing (C)	1
49	FK388-11	Spring, Pull	1
50	FK259-13	Spring Pinchroller (L)	1

SYMBOL NO.	PART NO.	DESCRIPTION	Q'TY
51	FK264-13	Spring Pinchroller (R)	1
(4)	FM190-11	Bush, Pinchroller	2
53	FG133-11	Rivet (Flat)	1
54	FK265-12	Link	1
(16)	FK444-13	Sprink Lock Lever	1
56	FG114-14	Scr., Mch. M2.6x5	1
57	FG114-17	Scr., Mch. M3x5	1
58	GF114-20	Scr., Mch. M2.6x6	2
59	FG118-12	Scr., Mch., (Flat) M2.6x6	2
60	FG121-11	Scr., Mch., (Pan) M2x1.5	1
61	FG129-12	Scr., Mch., (Bind) M2.6x5	2
62	FG137-13	Scr., Mch., M2x5	2
63	FG138-13	Scr., Mch., (Flat) M2.6x5	2
64	FG138-14	Scr., Mch., (Flat) M3x4	1
65	FG138-15	Scr., Mch., (Flat) M2.6x4	1
66	FG140-15	Scr., Mch., (Pan) M2.6x4	1
67	FG140-21	Scr., Mch., (Pan) M2.6x6	2
68	FG143-16	Scr., Mch., (Pan) M2.3x8	2
69	FJ111-12	Poly. Slider ϕ2.1xt0.5	3
70	FJ111-19	Poly. Slider ϕ2.1xt0.13	2
71	FJ111-30	Poly. Slider ϕ2.6xt0.25	1
72	MJ112-13	Washer (Flat)	4
73	KG111-13	Washer "c"	5
75	KG111-18	Washer "c"	4
76	KG111-19	Washer "c"	2
77	KG111-20	Washer "c"	2
78	KG111-22	Washer "c"	1
79	MG150-20	Washer "c"	2
80	KG111-21	Washer "c"	1
81	FP255-11	Pulley, Center	1
(16)	FM180-13	Bearing (B)	1
83	FK263-11	Spring, Coil (B)	1
84	FK388-12	Spring, Pull	3
85	FM180-11	Bearing	1
86	WG14P-02	Wire, Polyvinyl Chloride	1
87	F066-014	Assy., Lock Plate	1
		PRE-DOLBY UNIT	
IC101	51S42211P01	IC M51521L	1
IC102,103	51T40113T01	IC, Dolby	2
TR101	48S44886G01	Transistor 2SC1317	1
VR101, 102	18C42061J14	Variable Resistor 10K ohm	2
D101,102	48S134816	Diode SI 1S1555	2
D103	48T40059U34	Zenner Diode HZ-L	1
R101,102	6S41801P50	Res., C.F. 33K ohm 1/4W	2
R103,104	6S41801P22	Res., C.F. 150 ohm 1/4W	2
R105,106	6S41801P64	Res., C.F. 470K ohm 1/4W	2
R107,108	6S41801P44	Res., C.F. 10K ohm 1/4W	2
R109,110	6S41801P45	Res., C.F. 12K ohm 1/4W	2
R111,112	6S41801P52	Res., C.F. 47K ohm 1/4W	2
R113,114	6S41801P38	Res., C.F. 3.3K ohm 1/4W	2
R115,116	6S41801P23	Res., C.F. 180 ohm 1/4W	2
R117,118, 119,120	6S41801P61	Res., C.F. 270K ohm 1/4W	4
R123	6S41801P28	Res., C.F. 470 ohm 1/4W	1
R124	6S41801P32	Res., C.F. 1K ohm 1/4W	1
R125	6S41801P54	Res., C.F. 68K ohm 1/4W	1
R126,127	6S41801P58	Res., C.F. 150K ohm 1/4W	2
R128,129	6S41801P65	Res., C.F. 560K ohm 1/4W	2

SYMBOL NO.	PART NO.	DESCRIPTION	Q'TY
R130,131	6S44625G27	Res., M.F 27 ohm 2W	2
R132,133	6S41801P49	Res., C.F. 27K ohm 1/4W	2
R151,152	6S41801P60	Res., C.F. 220K ohm 1/4W	2
R153,154	6S41801P48	Res., C.F. 22K ohm 1/4W	2
C101,102	21C45322G27	Cap., Fix. 470pF 50V	2
C103,104, 111,112	23D44333G05	Cap., Elec. 4.7μF 25V	4
C105,106	23D44333G24	Cap., Elec. 47μF 10V	2
C107,108	8S44503P13	Cap., Mylar 0.01μF	2
C109,110	23D44333G01	Cap., Elec. 1μF 50V	2
C113,114	23S41059P07	Cap., Tantalum 1μF 35V	2
C115,116	8S44503P09	Cap., Mylar 0.0047μF	2
C117,118, 121,122, 125,126, 129,130	23D44333G08	Cap., Elec. 10μF 16V	8
C119,120	8S44503P18	Cap., Mylar 0.027μF 50V	2
C123,124	8S44503P10	Cap., Mylar 0.0056μF	2
C127,128	8S44503P21	Cap., Mylar 0.047μF	2
C131,132	23S41059P01	Cap., Tantalum 0.1μF	2
C133,134	23S41059P04	Cap., Tantalum 0.33μF	2
C135,136, 137	23B44780P03	Cap., Elec. 220μF 16V	3
C151,152	21C45322G25	Cap., Fix. 220pF 50V	2
C153	8C44833J13	Cap., Mylar 0.01μF	1
		PANEL MAIN AMP	
IC301,302	51T42684U01	IC TA7227P	2
D301,302	48S134816	Diode SI 1S1555	2
D303	48B41768G02	Diode 1N60	1
D304	48C40235G02	Diode 10E2	1
CH301	25T40405F01	Choke Filter	1
VR301	18C42061J14	Res., Variable 10K ohm	1
R303,304	6S41801P20	Res., C.F. 100 ohm 1/4W	2
R305,306	6S41801P50	Res., C.F. 33K ohm 1/4W	2
R307,308, 311,312	6S41801P41	Res., C.F. 5.6K ohm 1/4W	4
R309,310	6S41801P40	Res., C.F. 4.7K ohm 1/4W	2
R313	6S41801P16	Res., C.F. 47 ohm 1/4W	1
R314	6S41801P08	Res., C.F. 10 ohm 1/4W	1
C301,302	23B44780P07	Cap., Elec. 2200μF 16V	2
C303,304	8C44833J01	Cap., Mylar 0.001μF	2
C305,306	23D44333G13	Cap., Elec. 22μF 16V	2
C307,308, 317,318	8C44833J21	Cap., Mylar 0.047μF	4
C309,310, 311,312	23B44780P02	Cap., Elec. 100μF 16V	4
C313,314, 315,316	8C44833J25	Cap., Mylar 0.1μF	4
C319,320	23D44333G01	Cap., Elec. 1μF 50V	2
C321	23D44333G08	Cap., Elec. 10μF 16V	1
		PANEL CONTROL	
TR201, 202, 203,	48S44578J01	Transistor 2SC945	6

SYMBOL NO.	PART NO.	DESCRIPTION	Q'TY
204, 205, 206			
D201,202, 203,204, 205	48S134816	Diode SI 1S1555	5
VR201, 202	18T40271F01	Volume, Rotary (Tone)	2
VR203	18T20269F02	Volume, Rotary (Sw.)	1
VR204	18T40354F01	Volume, Rotary (Bal.)	1
R201,202, 207,208	6S41801P52	Res., C.F. 47K ohm 1/4W	4
R203,204, 219,220, 258	6S41801P56	Res., C.F. 100K ohm 1/4W	5
R205,206	6S41801P64	Res., C.F. 470K ohm 1/4W	2
R209,210, 223,224	6S41801P39	Res., C.F. 3.9K ohm 1/4W	4
R211,212, 213,214, 251,252	6S41801P40	Res., C.F. 4.7K ohm 1/4W	6
R215,216	6S41801P31	Res., C.F. 820 ohm 1/4W	2
R217,218	6S41801P50	Res., C.F. 33K ohm 1/4W	2
R221,222, 231,232	6S41801P36	Res., C.F. 2.2K ohm 1/4W	4
R225,226	6S41801P30	Res., C.F. 680 ohm 1/4W	2
R227,228	6S41801P38	Res., C.F. 3.3K ohm 1/4W	2
R229,230, 260	6S41801P41	Res., C.F. 5.6K ohm 1/4W	3
R233	6C43205J07	Res., M.F. 150 ohm 1/2W	1
R253,254	6S41801P37	Res., C.F. 2.7K ohm 1/4W	2
R255,256, 259	6S41801P34	Res., C.F. 1.5K ohm 1/4W	3
R257	6S41801P38	Res., C.F. 3.3K ohm 1/4W	1
R261	6S41801P62	Res., C.F. 330K ohm 1/4W	1
C201	23S41198U33	Cap., Elec. 100μF 10V	1
C202,219, 220	23S41198U40	Cap., Elec. 220μF 10V	3
C203,204, 205,206, 216,216	23D44333G05	Cap., Elec. 4.7μF 25V	6
C207,208, 209,210, 225,226	23S41059P01	Cap., Tantalum 0.1μF 16V	6
C211,212	23S41059P11	Cap., Tantalum 2.2μF 16V	2
C213,214	21C45322G39	Cap., Ceramic 680pF 50V	2
C217,218	23S41198U26	Cap., Elec. 47μF 10V	2
C221,222	8C44833J08	Cap., Mylar 0.0039μF	2
C223,224	8C44833J02	Cap., Mylar 0.0012μF	2
C239, 240	23B44780P01	Cap., Elec. 47μF 16V	2
C237,238	23S41059P03	Cap., Tantalum 0.22μF 35V	2
PANEL AUTO REVERSE			
TR401, 402, 403	48S44578J01	Transistor 2SC945	3
TR404	48S40662G05	Transistor 2SD235	1
TR405	48T43738P01	P.U.T. N13T1	1

SYMBOL NO.	PART NO.	DESCRIPTION	Q'TY
D401	48C40235G02	Diode 10E2	1
D406	48S134816	Diode 1S1555	1
R401	6S41802P39	Res., C.F. 3.9K ohm 1/4W	1
R401	6S41802P39	Res., C.F. 3.9K ohm 1/4W	1
R402	6S41802P62	Res., C.F. 330K ohm 1/4W	1
R403	6S41801P42	Res., C.F. 6.8K ohm 1/4W	1
R404	6S40150T57	Res., C.F. 470 ohm 1/4W	1
R405	6S41802P65	Res., C.F. 560K ohm 1/4W	1
R406,408	6S41802P35	Res., C.F. 1.8K ohm 1/4W	2
R407,409	6S41802P37	Res., C.F. 2.7K ohm 1/4W	2
R410	6C44652G06	Res., M.F. 270 ohm 1W	1
C301	23S41059P22	Cap., Tantalum 6.8μF 16V	1
C402	23D44333G24	Cap., Elec. 47μF 10V	1
PANEL LEAD SWITCH			
S409,410	40S41223P01	Lead Switch	2
D402,403	48S134816	Diode 1S1555	2
R411	6B43205J07	Res., M.F. 150 ohm 1/2W	1
R412,413	6S41802P44	Res., C.F. 10K ohm 1/4W	2
R414,415	6S41802P43	Res., C.F. 8.2K ohm 1/4W	2
C403,404	23D44333G08	Cap., Elec. 10μF 16V	2
MISCELLANEOUS			
TR501	48S40170G01	Transistor 2SC373	1
VR601	18T40353F01	Volume, Fader	1
MT601	72T40147F03	Level, Meter	1
S402,404	40T40356F01	Sw., Push	2
S403	40T40632F01	Sw., Push	1
S405	40T40355F01	Sw., Push Power	1
PL702	65C42954P02	Lump Pilot	1
PL703	65C42954P15	Lump Pilot	1
R501,502, 503,506	6S41801P30	Res., C.F. 680 ohm 1/4W	4
R504	6S41801P36	Res., C.F. 2.2K ohm 1/4W	1
R505	6S41801P42	Res., C.F. 6.8K ohm 1/4W	1
C501	23B44780P01	Cap., Elec. 10μF 16V	1
C701,702, 703,704, 705,706, 707	8T43140U02	Cap., Through	7
LED1,2, 4	48T42247U02	LED	3
LED3	48T42247U01	LED	1
J1	1T42405U02	Assy., Fuse Receptacle	1
J2	30T40438U04	Earth, Wire Assy.	1
J3	30T40337U10	Cord, Speaker	1
J4	30T40337U12	Cord, Speaker	1
J5	30T40337U09	Cord, Speaker	1
J6	30T40337U11	Cord, Speaker	1
J7	9T40125F02	Connector, Socket Assy.	1

SYMBOL NO.	PART NO.	DESCRIPTION	Q'TY
ASSY., PACKING			
101	1V40300F25	Assy., Pamph	1
101-1	68P40880F21	Owners, Manual	1
101-2	56B40230G12	Sack Poly	1
102	1V40200F31	Assy., Kit	1
102-1	3S40012G39	Tpg., Scr. M5x20	3
102-2	4S40072G12	Washer Tooth Lock	5
102-3	2S40000G13	Nut Hex M5x0.8	1
102-4	3A43315G11	Scr., Mch. M4x15	4
102-5	56B40230G27	Sack Poly	1

SYMBOL NO.	PART NO.	DESCRIPTION	Q'TY
103	56B40990T22	Non Slip Poly	1
104	56C44180U01	Tray, Pkg. (L)	1
105	56C44181U01	Tray, Pkg. (R)	1
106	56B44182U01	Tray, Pkg.	1
107	42B40994G05	Strap Receiver Mtg.	1
108	7B40690T01	Bkt., Mtg.	2
109	56D40340F01	Carton, (Ind.)	1
110	56D40340F02	Carton, (Master)	1/6
111	56A43276P07	Pad Pkg.	2/6
112	64B43136F01	Panel, Cassette	1
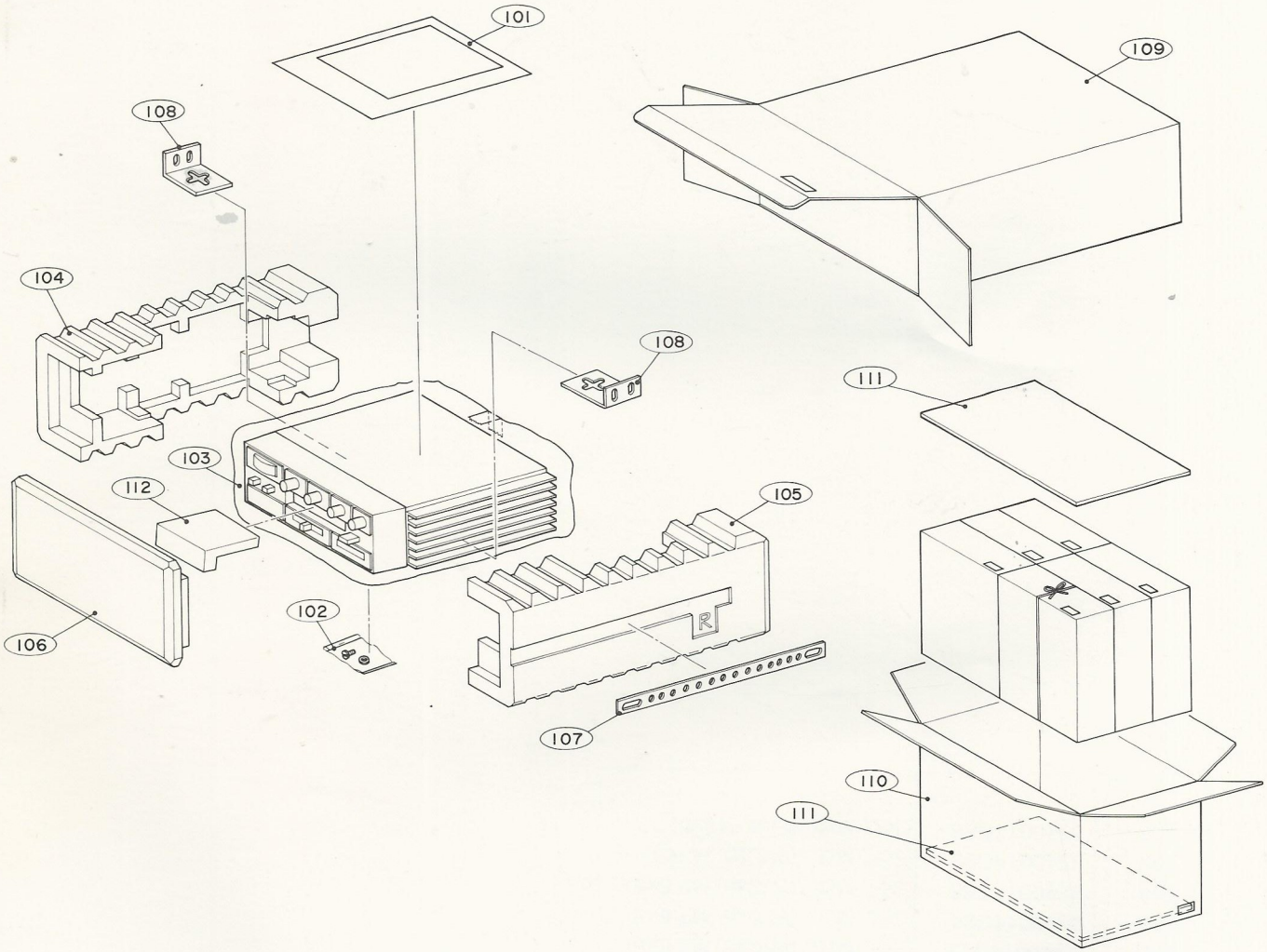
PACKING METHOD