TECHNICAL INFORMATION AND SERVICE DATA

Issued by Amalgamated Wireless (Australasia) Limited

A.W.A.

RADIOLA TELEVISION RECEIVER

58-00 SERIES CHASSIS

SERIES CHASSIS

The 58.00 series chassis is used in the following Models:

K117R NK129R NK145R KR148R KR159R
NK160R K161R KR175R K180R K181R K182R
K183R K184R K185R K186R NK187R KR188R
K189R P9R K195R.

GENERAL DESCRIPTION

The 58.00 series chassis is a hybrid design embodying both valves and semiconductors.

The majority of components are mounted on a single printed wiring board supported vertically. The board can be hinged open or lifted off its hinges as required.

SPECIFICATIONS

Aerial Input Impedance	300 ohms bal.
Vision I.F. Carrier Frequency	36.875 MHz
Sound I.F. Carrier Frequency	31.375 MHz
Sound power output	1.2W
Deflection angle	110°
Power consumption	155 Watts at 240 Volts, 50 Hz
Transformer prim taps	For 240V and 250V supplies
Valves	7
Transistors	10
Diodes	14

HIGH VOLTAGE WARNING.

Operation of this receiver outside the cabinet involves a shock hazard from the receiver power supplies. Work on the receiver should not be attempted by anyone who is not thoroughly familiar with the precautions necessary when working on high voltage equipment. Do not operate the receiver with the high voltage compartment shield removed. Make sure that the earth connection to the picture tube assembly is securely fastened before turning the receiver on.

PICTURE TUBE HANDLING PRECAUTIONS.

Do not install, remove or handle the picture tube in any manner unless shutter-proof goggles are worn. Keep the picture tube away from the body while handling.

When the receiver is switched off after operating for a time, the picture tube will retain a certain charge. Therefore it is advisable to discharge it before handling.

PICTURE TUBE OPERATING PRECAUTIONS.

Under no circumstances should the receiver be switched on with the deflection yoke removed from the picture tube. This produces an undeflected spot which may damage the screen.

CIRCUIT PROTECTION.

The power plug must be removed from the power point before attempting to replace any fuse.

All replacement fuses must be of the prescribed type to ensure adequate protection. Fuses are provided for the protection of the primary and secondaries of the mains transformer.

The primary fuse is a 1.5A slow-blow cartridge.

The secondary H.T. fuse is a 1.5A slow-blow cartridge.

The secondary L.T. fuse for the heaters comprises a short link of 0.014" dia. (27 B and S) plain tinned copper wire located on the printed wiring board.

A fusible resistor is also provided in the decoupling for H.T.3, H.T.4 and H.T.5. This provides additional protection against overload on these circuits; i.e. failure of drive to line output stage, short on H.T. line. The link on the resistor may be resoldered (using 60/40 solder) after eliminating the overload condition.

The picture tube is fitted with a "Ring-Trap" flashover protection device providing circuit protection against picture tube flashover. However, the "Ring-Trap" must be earthed directly to the picture tube aquadag.

CIRCUIT DESCRIPTION

Vision I.F. Amplifier.

T2, T3 and T4 form a wide-band, three-stage I.F. amplifier, collector tuned by printed coils L3, L4 and L5 respectively. L6 and L7 in the third stage collector circuit function as the high side shaping circuit and sound rejector respectively. The first two stages are gain controlled by the AGC amplifier, T9.

The final I.F. stage, T5, operates as a band-pass amplifier, collector tuned by printed coil L8. It is capacity coupled to the vision detector D2 with DC return via L9 and R26. L10 and L11 form the I.F. filter.

AGC Amplifier.

With no signal input, T9 is bottomed and the I.F. amplifier is running at full gain with approximately 8V at TP3.

Under reception conditions a proportion of the negative-going video signal is tapped off at pre-set contrast R35 and peak rectified by D5. As signal strength increases, the output from D5 increases and progressively reduces conduction in T9. Smoothing components C53, C54 and R71 remove hum caused by frame sync. pulses. As T9 conduction decreases the collector voltage rises with a consequent increase in the voltage applied to T3 base network. This results in increased current in T3 and T2 thus reducing the gain of the I.F. amplifier.

AGC voltage is supplied to the tuner from the DC amplifier T1 via R3. P8 provides means of adjusting the tuner AGC delay. The diode D1 provides negative supply for T1 by partial rectification of reference pulses from the line output transformer. The output from D1 is also used for line blanking.

Video Driver.

T6 operates as video driver and 5.5 MHz I.F. amplifier. Base bias is derived from and stabilized by the network R27, R30 and DZ1. Video and 5.5 MHz signals from D2 are DC coupled to the base of T6 which acts as an emitter follower to the video signals which are developed across R34-R35-R36. At 5.5 MHz T6 acts as a common emitter stage with the emitter decoupled by the 5.5 MHz rejector L14-C35, the collector tuned circuit acting as the collector lead. The AGC amplifier is supplied with video by the pre-set contrast control R35.

Video Amplifier.

The driver stage is AC coupled via the contrast control and C36 to the base of T7. The maximum video signal at the collector is approx. 100V P-P. High frequency peaking is provided by C37 and R41 and the collector is AC coupled to the C.R.T. cathode by C38.

Sound Circuits.

After amplification in T6, the 5.5 MHz signals are further amplified in limiter stage T10 with de-emphasis effected by R91-C69. The output at the collector is transformer fed to D10 and D11 operating in a ratio detector circuit. R96 provides adjustment for AM rejection. The output from the detector is fed via the volume control R92 to a two-stage valve audio amplifier, V2 (6BMB).

Line Timebase.

Sync. pulses are taken from VIA (6FL2) anode to the phase detector via integrating network R52-C42 and coupling capacitor C43.

A reference pulse, taken from the reference winding on the line output transformer (tag 1) is fed to the discriminator via integrating network R54-C41. The discriminator formed by D3 and D4 develops a negative or positive voltage depending on whether the reference pulse lags or leads the sync. pulse. The resultant DC voltage is amplifier by T8 and applied as a controlling bias to the grid of the line blocking oscillator VIB (6FL2).

The operating frequency of the oscillator is set by the bias tapped from R58 (horizontal hold control).

The stabilized line output stage is driven by the line oscillator via coupling capacitor C103.

Frame Time Base.

V3 (6GV8) is connected as a multivibrator oscillator circuit, the pentode section (V3B) also functioning as the output stage. The triode section is fed from the boost HT supply via the height control R107, with stabilization by Z1 VDR. Sync. pulses are fed in via C85, and two linearity controls, R116 and R118, are incorporated in the network connected to V3B anode. The VDR Z2 across the output transformer TR4 primary limits the frame flyback peak voltage, while C91 across the secondary bypasses any line frequency harmonics induced through the deflector coils.

Low Voltage Power Supply.

The low voltage power supply is derived from the cathode current of the frame output amplifier V3B.

Filtering is provided by R115 and C89.

SERVICE NOTES

Access for Service.

The printed board assembly can be hinged open after releasing two fixing screws. The hinges are indented to hold the printed board in the open position. When opened to the second indent, the printed board can be lifted off the hinges. Pluggable connections for the tuner, deflector coils and loudspeaker leads facilitate complete removal.

Mains Voltage Adjustment.

The mains transformer is provided with taps for 240V and 250V mains supplies. Connection to the transformer is via quick-connect terminals, and all receivers leave the factory with the adjustment set at 240V.

Replacement C.R.T.

Should it become necessary to replace the CRT, the replacement must be fitted with the ring trap base. In the event of a replacement tube not being fitted with the ring trap base, the base should be changed over with that from the faulty tube. Bases are also available from Service and Spare Parts Depots (Part No. T125088).

Focus Adjustment.

This adjustment has been made at the factory and it should only be necessary to re-adjust if the picture tube is replaced. In this case, adjust the focus control R132, until maximum definition of the line structure of the raster is obtained.

Centring Adjustment.

The centring magnets consist of two discs mounted on the rear of the deflection yoke cup. Using a suitable test pattern, the rings are alternatively rotated until the observed picture is central.

Deflection Yoke Adjustment.

If the lines of the raster are not horizontal or squared with the picture tube, rotate the deflection yoke until this condition is obtained. Tighten the yoke clamp.

DEFLECTION ADJUSTMENTS.

Apply a signal to display a linearity test pattern on the screen.

1. Set HEIGHT, TOP LIN., VERT. LIN. and WIDTH controls at the mean setting.
2. By adjustment of the HOR. HOLD and VERT. HOLD controls obtain a synchronised picture.
3. Adjust HOR. HOLD control so that there is no fold over on either side.
4. Adjust the centring magnets to obtain a correctly centred picture.
5. Adjust the width control to give ½″ to ¾″ overscan both sides ensuring that the current through the fusible resistor R79 does not exceed 180ma (approx. 14.4V across the resistor).
   NOTE: If a linearity sleeve is utilised the width control and linearity sleeve should be adjusted together until the desired width and linearity are obtained. This should be achieved with the width control set at approx. half-way to ensure correct E.H.T. the current through the fusible resistor not exceeding 180ma.

HORIZONTAL LINEARITY SLEEVE.

The horizontal linearity correction sleeve should be positioned as shown in Figure 1 with the moulded ring ⅜″ from the edge of the deflector coils body. Adjustment is allowable within the limits ¼″-½″ to obtain best linearity. The deflector coils clamp should be slackened before adjusting.

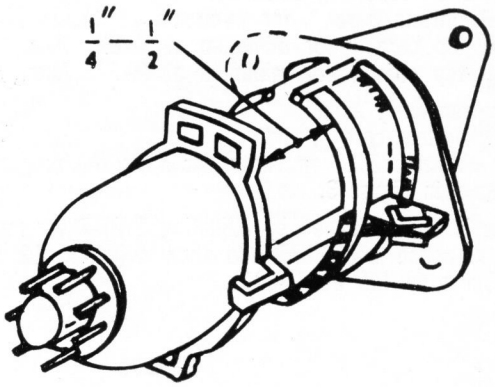

Figure 1: Position of Linearity Sleeve.

6. Adjust TOP and VERT. LIN. for best linearity.
7. Adjust HEIGHT control for ½″ overscan at the top and bottom.
8. If necessary adjust in conjunction the HEIGHT, TOP and VERT. LIN. controls for best linearity and the required overscan.

VISION I.F. ALIGNMENT

NOTE: When two positions of the core appear to give the correct adjustment, the following apply:
* core position nearest to chassis.
† core position nearest top of can.

Turn Mains switch off.

Connect an Oscilloscope to TP2 (vision detector) through a 4K7 resistor.

Set the tuner to the vacant or star channel.

Connect the output of the sweep generator (36 MHz) through the network in Figure 2, to the mixer grid (TP1 on the tuner).

Connect a low impedance d.c. supply of approximately 7 volts to the vision a.g.c. line T.P.3 (negative to chassis).

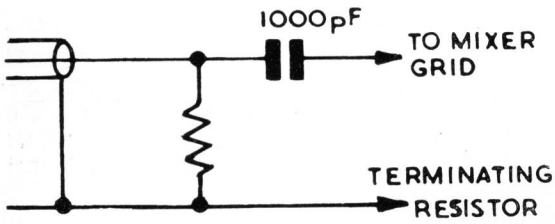

Figure 2.

Adjust the a.g.c. bias for an I.F. gain reduction of approx. 30 db. Adjust the sweep generator output for a one volt display of the selectivity curve on the oscilloscope. During alignment, the sweep generator output should be adjusted to maintain the one volt display in the C.R.O.

Adjust the following inductors:
2VRR-R bottom core * for minimum at 31.375 MHz.
2VRR-R top core † for minimum at 38.875 MHz.
1VPR-R top core † for minimum at 29.875 MHz.

Simultaneously adjust:
1VPR-R bottom core *, and
Tuner output coil L2 on Tuner, for a smooth response as shown in Figure 3.

This is best achieved by adjusting 1VPR-R for maximum response at 36.875 and then adjusting L2 for 36.875mHz to fall at 45-50%.

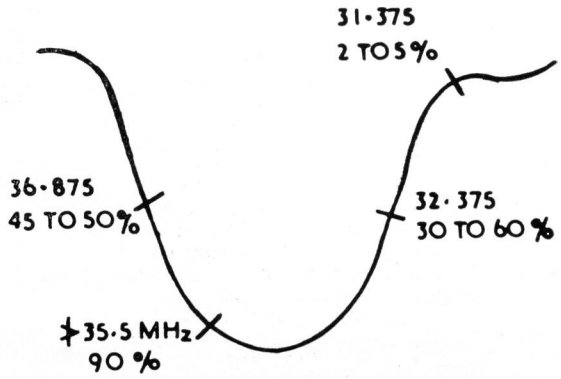

Figure 3.

SOUND I.F. ALIGNMENT

1. Set the ratio detector balance pot R96 in the middle of its range. Inject an unmodulated 5.5 MHz signal to TP2 (junction R31, R29 and L11) via a 3300 pf capacitor or alternately, tune the receiver to a strong transmitted signal.
2. If using a signal generator for alignment, connect a shorting link between the AGC line TP3 (junction C10 and R13) to ground. If using a transmitted signal for alignment, connect the negative terminal of the variable voltage low impedance bias supply to chassis, and the positive terminal to the AGC line TP3.
3. Connect a 20,000 Ohms/volt meter between TP4 (junction R96, R98 and C76) and ground and switch to the 10 volt DC range.
4. Adjust the signal generator attenuator (or the bias supply if using a transmitted signal) to obtain a meter reading of less than 3 volts. Throughout the alignment the attenuator (or bias supply) should be readjusted to maintain the meter reading below 3 volts. Adjustment of the tuning cores in the coil assembly should be from the outermost positions in the formers i.e. for the bottom winding adjustment should be from a position nearest the printed board.
5. Adjust the top and bottom cores of the 1SRP-R coil assembly, and the top and bottom cores of the 2SPS-R coil assembly, for a peak reading on the meter. Repeat if necessary.
6. Disconnect the meter. Connect two matched resistors of approximately 100K in series between TP4 and ground. Reconnect the meter between the junction of these two resistors and TP5 (junction R91 and R92).
7. Readjust the top core of the 2SPS-R coil assembly for a zero meter reading. Note that the meter reading may swing either positive or negative. Disconnect the meter and the resistor.
8. The 5.5 MHz trap (top core or the 1SRP-R coil assembly) must now be readjusted slightly for minimum 5.5 MHz patterning. Either of the following may be used.
   (a) When using a signal generator for alignment, connect an Oscilloscope to the picture tube cathode. Set the Oscilloscope to AC coupling and adjust the attenuator for a five volt display. Adjust the top core of the 1SRP-R coil assembly for minimum 5.5 MHz amplitude.
   (b) When using a transmitted signal for alignment disconnect the bias supply and other test equipment and adjust the fine tuning into sound on picture until the 5.5 MHz herringbone pattern appears clearly on the screen. Adjust the top core of 1SRP-R coil assembly for minimum patterning.
9. Adjust the ratio detector balance R96 for minimum buzz on sound during a break in sound transmission.
10. Finally, repeat steps 6 and 7 above.

A.G.C. ADJUSTMENT.

The following adjustments should only be performed after all other receiver adjustments have been satisfactorily carried out.

1. With the receiver tuned to the strongest signal. Set the main contrast control R38 to maximum.

2. With a weaker signal (1 mv approximately), reset the main contrast control R38 and the brightness control R120 for a picture of normal brightness and contrast, and adjust the R.F. A.G.C. delay control R8 for threshold of snow.
3. Repeat paragraph 1.
   Set the fine tuning control correctly.
   Set the pre-set contrast control R35 for onset of picture tearing and back off slightly. Note that an incorrect setting of R35 will give rise at one extreme to loss of picture and sound, and to partial loss of sync. at the other.

MECHANICAL PARTS LIST

NOTE: Prefix "A" indicates AWA number.
Prefix "T" indicates Thorn number.

	Part No.
Socket for EHT rectifier	T845010
Clip for EHT rectifier socket	T245134
Adaptor clip for EHT rectifier anode connection (required with Philips LOT only)	T245138
9-way connection—female (chassis mtg.)	T300021
Pins for 9-way female connector	T910458
9-way connector—male (on tuner lead)	A234695
Pins for 9-way male connector	A570043
Octal valveholder	T945029
9-pin valveholder	T945041
CRT socket	T845190
Fuseholder clip	T245106
Heat sink (for T7 transistor)	T838000
Chassis hinge (pin)	T469027
Chassis hinge (socket)	T469026
Line O/P transformer cover	T330067
Rear control panel assembly	T12308
Rear control knob	T510170
Spacer for rear control knob	T851030
Preset controls guide funnel	T467002

ELECTRICAL PARTS LIST

1VPR-R Vision I.F. coil assembly	T10015
2VRR-R Vision I.F. coil assembly	T10016
1SRP-R Sound I.F. coil assembly	T10109
2SPS-R Sound I.F. coil assembly	T10111
Dust cores for vision I.F. coil assemblies	T315012
Dust cores for sound I.F. coil assemblies	T315019
Printed I.F. coil assembly (c/w capacitors)	T12704
I.F. filter chokes, L9, L10 (inside video detector assy.)	T230027
Video detector assembly	T12510
Line output transformer: Philips NT3102	T917367
or Rola TV3102	T917370
Deflection yoke: Philips NT3200/01	T360017
or Rola TV7000	T360016
Horizontal linearity sleeve	T839024
Mains transformer for Model P9R	A57071/001
Mains transformer all other Models	A57085/001
Audio O/P transformer	T917020
Frame O/P transformer	T917253
Line blocking transformer	T917124

VALVES

V1 Sync. sep./Line osc. 6FL2	T936021
V2 Audio amp./Audio O/P 6BM8	T936020
V3 Frame osc./Frame O/P 6GV8	T936005
V4 Boost diode 6AL3	T936008
V5 Line O/P 6CM5	T936007

DIODES

D1	Line blanking. Fairchild AB2053	T378032
	or Fairchild AN2006	T378026
	or Mullard OA91	T378000
D2	Video detector. Mullard OA90	T378003
D3, D4	Phase detector. Fairchild AN2002	T378024
D5	AGC peak detector. Mullard OA90	T378003
D6, D7, D8, D9	Bridge rectifier. Mullard BY126-400	T378001
	or AWV 1N3194	T378029
D10, D11	Ratio detector.	
	Fairchild AN2001 (each)	T378019
	or Mullard AA119 (pair)	T378002
D12	Frame sync. injection.	
	Fairchild AN2002	T378024
D13	EHT rectifier. Siemens TV18-S	T720007
DZ1	Zener diode—video driver bias stablisation.	
	Fairchild AN7102	T378005
	or Fairchild AB7112	T378040

TRANSISTORS

T1	RF AGC amplifier. Fairchild AX1325	T918066
	or Fairchild AY1117	T918079
	or Mullard BC158	T918056
	or Mullard BC178	T918033
T2, T3	1st/2nd vision I.F. amplifiers.	
	Fairchild AX6184	T918068
	or Fairchild SE5024	T918002
	or Mullard BF196	T918052
	or Mullard BF167	T918108
T4	3rd vision I.F. amplifier. Fairchild AX1353	T918073
	or Fairchild SE5030	T918105
	or Mullard BF194	T918050
	or Mullard BF184	T918032
T5	4th vision I.F. amplifier. Fairchild AX1354	T918074
	or Fairchild SE5030	T918105
	or Mullard BF197	T918053
	or Mullard BF173	T918109
T6	Videodriver/1st sound I.F. amplifier.	
	Fairchild AX1354	T918074
	or Fairchild SE5030	T918105
	or Mullard BF197	T918053
	or Mullard BF173	T918109
T7	Video amplifier. Fairchild AX6187	T918071
	or Fairchild SE7001	T918106
	or Mullard BF178	T918055
T8	D.C. amplifier (line osc.). Fairchild AX1352	T918075
	or Fairchild 2N699	T918107
	or Mullard BF178	T918055
	or Mullard OC925	T918100
T9	AGC amplifier. Fairchild AX1351	T918067
	or Fairchild AY1121	T918086
	or Mullard BC148	T918048
	or Mullard BC108	T918026
T10	2nd sound I.F. amplifier. Fairchild AX1353	T918073
	or Fairchild SE5030	T918105
	or Mullard BF194	T918050
	or Mullard BF184	T918032

POTENTIOMETERS

R8	4700 ohn lin. Tuner AGC delay	T686504
R35	220 ohm lin. Preset contrast	T686501
R38	1500 ohm lin. Contrast	T686503
R58	500K lin. Line hold	T686132
R96	4700 ohm lin. Ratio detector balance	T686504
R105	500K lin. Frame hold	T686132
R107	1M lin. Frame height	T686175
R116	220K lin. Frame top linearity	T686083
R118	220K lin. Frame linearity	T686083
R132	2.2M lin. Focus	T686176
R138	2.2M lin. Line width	T686176
R92	500K log. Volume—Refer misc. parts list for model in which chassis is fitted.	
R120	500K lin. Brightness—Refer misc. parts list for model in which chassis is fitted.	
	Tone control (if fitted). 1 Meg. curve "A" Together with one 0.0068 mf 10% 100V polyester.	A623200

RESISTORS

Z1, Z2	VDR. Philips E298CD/A258	T745016
	or Philips E298ED/A258	T745010
Z3	VDR. Philips E299DD/P344	T745018
Z4	VDR. Philips E298ZZ/05	T745017
	or Philips E298ZZ/06	T745011
R1	15K ½w ±10% carbon composition.	
R1A	47K ½w ±10% carbon composition.	
R2	39K ½w ±10% carbon composition.	
R3	1M ½w ±10% carbon composition.	
R4	22K ½w ±10% carbon composition.	
R4A	100K ½w ±10% carbon composition.	
R5	1M 0.35w ±10% carbon composition.	
R6	10 ohm 0.35w ±10% carbon composition.	
R7	10K 0.35w ±10% carbon composition.	
R9	22 ohm ½w ±10% carbon composition.	
R10	100 ohm ½w ±10% carbon composition.	
R11	1200 ohms ½w ±10% carbon composition.	
R12	1200 ohm ½w ±5% carbon film.	
R13	220 ohm ½w ±10% carbon composition.	

ELECTRICAL PARTS LIST (CONT.)

R14	220 ohm 0.35w ±10% carbon composition.
R15	1000 ohm ½w ±10% carbon composition.
R16	1500 ohm ½w ±5% carbon film.
R17	180K 0.35w ±10% carbon composition.
R18	330 ohm 0.35w ±10% carbon composition.
R19	100 ohm 0.35w ±10% carbon composition.
R20	1500 ohm ½w ±10% carbon composition.
R21	8200 ohm ½w ±5% carbon film.
R22	1800 ohm ½w ±5% carbon film.
R23	270 ohm 0.35w ±10% carbon composition.
R24	330 ohm ½w ±5% carbon film.
R25	39 ohm 0.35w ±5% carbon composition.
R26	680 ohm ½w ±10% carbon composition (inside vid. det. can.).
R27	12K ½w ±10% carbon composition.
R29	3900 ohm 0.35w ±10% carbon composition.
R30	150k 1w ±10% carbon composition.
R31	330 ohm ½w ±10% carbon composition.
R32	220 ohm 0.35w ±10% carbon composition.
R33	2700 ohm 0.35w ±10% carbon composition.
R34	220 ohm ½w ±10% carbon composition.
R36	120 ohm ½w ±10% carbon composition.
R37	15 ohm 0.35w ±10% carbon composition.
R39	47W 1w ±5% carbon film.
R40	470 ohm ½w ±5% carbon film.
R41	22 ohm 0.35w ±10% carbon composition.
R42	5600 ohm 1w ±5% carbon film.
R43	220 ohm ½w ±10% carbon composition.
R44	82 ohm ½w ±5% carbon film.
R45	10K 0.35w ±10% carbon composition.
R46	1M 0.35w ±10% carbon composition.
R47	47K ½w ±10% carbon composition.
R48	22K ½w ±10% carbon composition.
R49	22K ½w ±10% carbon composition.
R50	33K 0.35w ±10% carbon composition.
R51	82K ½w ±10% carbon composition.
R52	22K ½w ±10% carbon composition.
R53	15K ½w ±10% carbon composition.
R54	56K ½w ±10% carbon composition.
R55	100K ½w ±10% carbon composition.
R56	100K ½w ±10% carbon composition.
R57	220K ½w ±10% carbon composition.
R59	100K ½w ±10% carbon composition.
R60	15K ½w ±10% carbon composition.
R61	180K ½w ±5% carbon film.
R62	10K 0.35w ±10% carbon composition.
R63	390K ½w ±5% carbon film.
R64	220K ½w ±5% carbon film.
R65	27K ½w ±10% carbon composition.
R66	15K ½w ±5% carbon film.
R67	5600 ohm 0.35w ±10% carbon composition.
R68	2200 ohm ½w ±5% carbon film.
R69	1000 ohm ½w ±5% carbon film.
R70	100 ohm 0.35w ±10% carbon composition.
R71	10K ½w ±10% carbon composition.
R72	220K 0.35w ±10% carbon composition.
R76	1400 ohm 5w } Composite H.T. dropper.
R77	220 ohm 5w } Thorn Part No. 745026.
R78	260 ohm 15w }
R79	80 ohm 3w ±5% wire-wound fusible. Thorn Part No. 745027.
R80	10K 1w ±10% carbon composition.
R80A	8200 ohm 1w ±10% carbon composition.
R81	5600 ohm ½w ±10% carbon film.
R82	2700 ohm 5w ±10% wire-wound.
R83	1000 ohm ½w ±10% carb. comp. } Mounted
R84	3300 ohm 1w ±10% carb. comp. } on tuner
R85	3300 ohm 1w ±10% carb. comp. } assembly.
R86	100K ½w ±10% carbon composition.
R87	10K 0.35w ±10% carbon composition.
R88	3300 ohm 0.35w ±10% carbon composition.
R89	1000 ohm 0.35w ±10% carbon composition.
R90	1800 ohm 0.35w ±10% carbon composition.
R91	22K 0.35w ±10% carbon composition.
R93	680 ohm ½w ±10% carbon composition.
R94	1000 ohm ½w ±10% carbon composition.
R95	10M ½w ±10% carbon composition.
R97	220K ½w ±10% carbon composition.
R98	27K ½w ±10% carbon composition.
R99	15K ½w ±10% carbon composition.
R100	680K ½w ±10% carbon composition.
R101	10K 0.35w ±10% carbon composition.
R102	270 ohm ½w ±10% carbon composition.
R103	33K 0.35w ±10% carbon composition.
R104	180K 0.35w ±10% carbon composition.
R106	4700 ohm 0.35w ±10% carbon composition.
R108	1.2M 0.35W ±10% carbon composition.
R110	560K 0.35w ±10% carbon composition.
R111	18K ½w ±10% carbon composition.
R112	18K ½w ±10% carbon composition.
R113	10K 0.35w ±10% carbon composition.
R114	120K 1w ±10% carbon composition.
R115	330 ohm 1w ±5% carbon film.
R117	56K 1w ±10% carbon composition.
R121	150K ½w ±10% carbon composition.
R122	330K 1w ±10% carbon composition.
R123	1500 ohm 0.35w ±10% carbon composition.
R124	3.9M ½w ±10% carbon composition.
R125	22K 0.35w ±10% carbon composition.
R126	8200 ohm 0.35w ±10% carbon composition.
R128	22K 0.35w ±10% carbon composition.
R129	27K ½w ±10% carbon composition.
R131	1.5M 0.35w ±10% carbon composition.
R133	2500 ohm 5w ±5% wire-wound.
R134	1000 ohm 0.35w ±10% carbon composition.
R135	1.8M ½w ±10% carbon composition.
R136	1.8M ½w ±10% carbon composition.
R137	330K ½w ±10% carbon composition.
R140	680K ½w ±10% carbon composition.

CAPACITORS

C1	1000pF 400v ±10% polyester film or ceramic.
C2	0.22mF 100v ±10% poly. film (mtd. on tuner assy.).
C3	47pF 500v ±5% NPO-N470 ceramic.
C4	4.7mF 25vW electrolytic (single-ended).
C5	8.2pF 63v ±0.5pF NPO ceramic.
C6	33pF 63v ±5% NPO-N150 ceramic.
C7	0.01mF 40v +80% —20% ceramic.
C8	0.01mF 40v +80% —20% ceramic.
C9	82pF 50v ±5% NPO-N470 cer. (on ptd. coil bd.).
C9A	220pF 500v ±10% N470-N750 ceramic.
C10	0.01mF 40v +80% —20% ceramic.
C11	100mF 25vw electrolytic (single-ended).
C12	0.01mF 40v +80% —20% ceramic.
C13	56pF 50v ±5% NPO-N150 cer. (on ptd. coil bd.).
C14	0.01mF 40v +80% —20% ceramic.
C15	0.01mF 40v +80% —20% ceramic.
C16	1000pF 40v +80% —20% cer. (on ptd. coil bd.).
C17	0.01mF 50v ±10% polyester film.
C18	39pF 50v ±5% NPO-N220 cer. (on ptd. coil bd.).
C19	0.01mF 40v +80% —20% ceramic.
C20	1000pF 40v +80% —20% cer. (on ptd. coil bd.).
C21	8.2pF 63v ±0.5pF NPO ceramic.
C22	18pF 63v ±5% NPO cer. (inside 2VRR-R coil can).
C23	5.6pF 50v ±0.25pF P100-NPO cer. (inside 2VRR-R coil can).
C24	0.01mF 40v +80% —20% cer. (on ptd. coil bd.).
C25	1000pF 40v +80% —20% ceramic.
C26	0.01mF 40v +80% —20% ceramic.
C27	0.01mF 40v +80% —20% ceramic.
C28	3.9pF 50v ±0.25pF P100-NPO cer. (inside video det. can).
C29	20pF 500v ±10% NPO cer. feed thru (in video det. base).
C30	1000pF 500v +80% —20% cer. feed thru (in video det. base).
C31	0.01mF 40v +80% —20% ceramic.
C32	10pF 500v ±10% NPO cer. feed thru (in video det. base).
C34	0.01mF 40v +80% —20% ceramic.
C35	100pF 50v ±10% N150-N330 ceramic.
C36	47mF 25vw electrolytic (single-ended).
C37	2200pF 50v ±10% ceramic or polyester film.
C38	0.47mF 200v ±10% poly. film or met. paper.
C39	0.015mF 250v ±10% polyester film.
C40	0.047mF 250v ±10% polyester film.
C41	1500pF 100v ±10% ceramic or polyester film.
C42	150pF 500v ±10% N330-N470 ceramic.
C43	47pF 500v ±10% NPO-N470 ceramic.
C44	1000pF 100v ±10% ceramic or polyester film.
C45	12pF 500v ±10% P100-NPO ceramic.
C46	150pF 63v ±10% N330-N750 ceramic.
C47	0.01mF 40v +80% —20% ceramic.
C48	2200pF 50v ±20% ceramic or polyester film.
C49	0.47mF 50v ±20% polyester film or met. paper.
C50	270pF 500v ±5% mica.

ELECTRICAL PARTS LIST (CONT.)

C51	180pF 500v ±5% N220-N750 ceramic.
C52	0.01mF 40v +80% —20% ceramic.
C53	22mF 25vw electrolytic (single-ended).
C54	2.2mF 25vw electrolytic (single-ended).
C55	3300pF 500v +80% —20% ceramic.
C56	3300pF 500v +80% —20% ceramic.
C57	3300pF 500v +80% —20% ceramic.
C58	150mF 300vw } Multiple electrolytic.
C59	150mF 300vw } Thorn Part No. 279360.
C60	100mF 300vw }
C61	10mF 315vw electrolytic (single-ended).
C62	10mF 315vw electrolytic (single-ended).
C63	10mF 315vw electrolytic (single-ended).
C64	3300pF 500v ±20% cer. (mounted on tuner assy.).
C64A	4.7mF 350vw electrolytic (mounted on tuner assy.).
C65	470pF 50v ±5% N750-N1500 ceramic.
C66	1000pF 100v ±10% ceramic.
C67	0.01mF 40v +80% —20% ceramic.
C68	560pF 50v ±5% N750-N2200 ceramic.
C69	2200pF 50v ±10% ceramic or polyester film.
C70	120pF 50v ±5% N150-N470 cer. (inside 2SPS-R coil can).
C71	120pF 50v ±5% N150-N470 cer. (inside 2SPS-R coil can).
C72	4.7mF 350vw electrolytic (pigtail).
C73	0.01mF 40v +80% —20% ceramic.
C74	2200pF 50v +80% —20% ceramic or polyester film.
C75	0.022mF 400v ±10% polyester film.
C76	4.7mF 25vw electrolytic (single-ended).
C77	0.01mF 400v ±10% polyester film.
C79	0.022mF 400v ±10% polyester film.
C80	220pF 500v ±10% N470-N3300 ceramic.
C81	1mF 350vw electrolytic (pigtail).
C82	4700pF 630v ±10% polyester film.
C83	0.033mF 160v ±10% polyester film.
C84	0.022mF 100v ±10% polyester film.
C85	0.022mF 250v ±10% polyester film.
C86	0.033mF 160v ±10% polyester film.
C87	2200pF 400v ±10% polyester film.
C88	8200pF 400v ±10% polyester film.
C89	220mF 35vw electrolytic (single-ended).
C90	100mF 50vw electrolytic (single-ended).
C91	0.047mF 400v ±10% polyester film.
C92	0.047mF 400v ±10% polyester film.
C93	0.1mF 270v ±10% polyester film (mtd. on tuner assy.).
C94	0.1mF 630v ±10% polyester film.
C95	0.047mF 250v ±10% polyester film.
C97	0.056mF 1000v ±10% met. paper or polyester-paper.
C98	1000pF 400v ±10% ceramic or polyester film.
C99	0.18mF 400v ±10% polyester film.
C100	180pF Part of line O/P trans. assy.
C101	220pF 3000v ±10% ceramic.
C102	0.1mF 400v ±10% polyester film.
C103	0.047mF 400v ±10% polyester film.

NOTE: Prefix "A" indicates AWA number.
Prefix "T" indicates Thorn number.

No field adjustments to this tuner are recommended apart from the normal user adjustment of the Fine Tuning. In connection with this there are a few points that should be kept in mind:

1. The Fine Tuning control is of the pre-set type, whether it is concentric with, or off-set from, the Channel Selector and, as such, adjusts each channel individually and independently.
2. The frequency stability of this tuner is such that the Fine Tuning control should be regarded as a pre-set control, adjusted during installation or repair and thereafter forgotten by the user for long periods of time.
3. A small amount of backlash, about 10°, is associated with the Fine Tuning control, caused by the take up necessary in engaging the drive mechanism to the individual channel screws. When the control is released there should be a light spring return action, indicating that the drive train is out of mesh with the channel adjusting screw.
4. The tuning range of this control is quite considerable at approximately ±6 Mc/s from the nominal, i.e. 2 Mc/s per turn of the Fine Tuning control.
5. Keeping these points in mind, particularly 3, care should be taken to ensure that, when the tuner is mounted in a cabinet, no binding occurs between the Fine Tuning control and the Channel Selector knob or the cabinet itself. Any such binding may over-ride the spring return thus leaving the tuning drive in mesh with its channel adjusting screw which will then be turned out of adjustment as the Channel Selector is rotated.

FINE TUNING ADJUSTMENT.

In pre-setting the Fine Tuning control in other than fringe areas, allow the receiver to run for about ten minutes after switching on. Select the desired channel and turn the Fine Tuning control anti-clockwise until edge-beat or sound bars are just visible. The correct setting is about 30° clockwise (including backlash) from this point which reduces the frequency approximately 100 Kc/s. This ensures that edge-beat or sound bars will not be visible, making allowances for mains or temperature changes.

In fringe areas it is also recommended that the control be regarded as a pre-set one. After the warm-up period, tune for the optimum picture and sound as average conditions dictate. The stability of the oscillator will be found to be better than the user's ability to return to the optimum point.

REPLACEMENT OF VALVES.

1. 6HG8 Oscillator Mixer.

The replacement of a 6HG8, due to failure, may cause frequency changes on some channels, greater than desirable, i.e. 250 Kc/s on high channels. The Fine Tuning, therefore, should be re-set on the used channels after valve changes.

2. R.F. Amplifier (see Tuner Designation).

Some care should be exercised when changing the R.F. Amplifier particularly in cases where aerials of high s.w.r. or unbalanced impedances are used on low frequency channels. The important change is the grid to plate capacitance, which may cause regeneration. Regeneration may be seen with only one side of the 300 ohm line connected or with an open circuit length of 300 ohm line to the aerial terminals. However, a considerable operating margin of safety is assured with most aerials due to non-optimum neutralising caused by valve changes. Always seat the valve firmly in its socket.

In cases where regeneration is suspected, another valve may be tried and in the extreme case re-adjustment of the tuner will be necessary on the bench, using appropriate equipment.

MINOR RE-ADJUSTMENT OF TUNER.

Re-adjustment of the tuner should only be necessary if components or switch contacts are replaced. When necessary, it should be carried out using sweep alignment of known accuracy.

The tuner side-covers may be removed without affecting the response curves or oscillator frequencies.

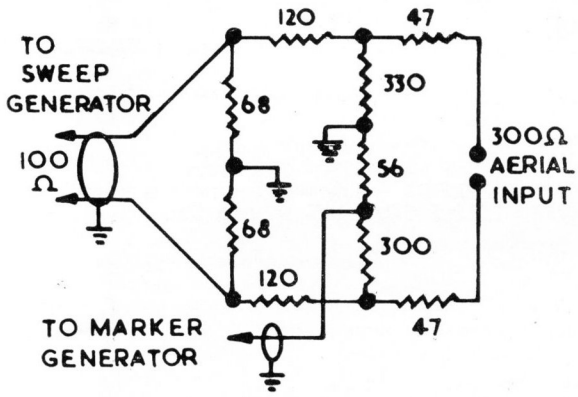

Figure 4.

Switch on the receiver or connect a power supply to the tuner and carry out the following adjustments with the correct voltages: Filaments 6.3 volts A.C.; H.T. 140 volts supplied from a 200 volts source via a 3.3K ohms dropping resistor A.G.C., that negative voltage which produces a 10 db gain reduction, approximately—2.5 volts (see paragraph 3 of Complete Alignment). Connect the sweep generator to the aerial terminals of the tuner. It is advisable to have on hand a special cable for connection from the tuner to the sweep generator, with a resistive pad (figure 4) having balanced connections going directly to the aerial input terminals.

Connect the vertical input of the c.r.o. direct to TP2T on the tuner with a shielded lead. The c.r.o. should have suitable sensitivity (approximately 0.03 volts p-p) for the required deflection. If an appropriate c.r.o. is not available, an amplifier with good low frequency response may be used, but care should be taken that hum voltages are not visible on the c.r.o. as indicated by a curved reference line on the c.r.o. with sweep blanking on. If this occurs it will be necessary to bypass the H.T. with an electrolytic capacitor to avoid B+ hum. Switch to each channel and roughly check its response against those shown in figure 5. If Channel 5 is no worse than the majority of the others, commence alignment at Channel 5. Note: If Channel 5 is materially worse than the other channels, replace the Channel 5 strip with a standard one and re-align the tuner as in Complete Step by Step Alignment. At the completion of the alignment, replace the standard Channel 5 strip with the original one and adjust the windings to give the correct response. The position of Channel 5 is indicated when the mark on one of the spindle flats is pointing to the 5 o'clock position viewing the tuner mounted normally on its base plate.

Adjust C8T and C12T for correct curve shape and position as shown in figure 5. Check that the injection voltage measured at TP1 is between 1.5 and 5 volts, using a Voltohmyst with a 100K ohm resistor in series with the d.c. probe.

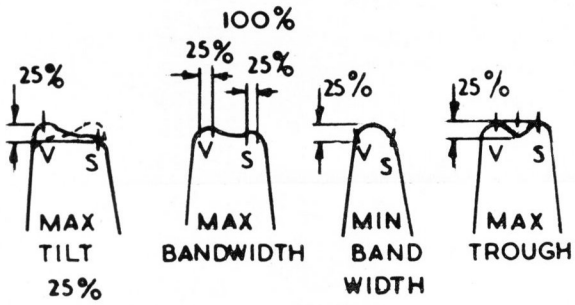

Figure 5.

Check all other channels for response and correct oscillator frequency. If the curves are slightly out of tolerance (figure 5), re-adjust C8T and C12T for compromise setting for all channels. If the response curve for any particular channel is well outside the limits, remove that coil-strip and examine it for damage or mal-adjustment. Should mal-adjustment be in evidence, re-adust for correct response by carefully spreading or closing the winding in the appropriate section.

COMPLETE STEP BY STEP ALIGNMENT.

1. Connect the vertical input of the c.r.o. to C6T and connect a 470K ohm resistor from C6T to the chassis. Operate the tuner on Filament Supply only.

2. Swith the tuner to Channel 5 and adjust C7T so that the input circuit response is symmetrically placed with respect to the picture and sound markers as shown in figure 6.

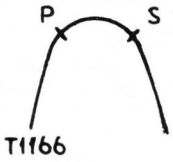

Figure 6.

3. Connect the c.r.o. to TP2T and adjust Channel 5 oscillator frequency with the Fine Tuning control for the correct frequency. Set bias to zero and pattern height to 10 divisions on the c.r.o. Remove 10 db of attenuation and set bias to give 10 divisions on the c.r.o. Adjust the plate and grid trimmers (C8T, C12T) to give a symmetrical response with correct marker positions as shown in figure 5.

4. Apply —20 volts bias to the A.G.C. point and adjust the neutralising plate by positioning it in a vertical plane until the pattern is a minimum between picture and sound markers with sufficient output from the sweep generator and gain in the c.r.o. to show some output on the c.r.o.

5. Observe Channel 5 response with the bias determined in Step 3. If the response is correct with respect to the marker position and has less than 6% tilt, proceed to Step 6. Otherwise repeat 3 and 4. Note: Step 5 must be the last adjustment made.

6. Switch to Channel 0 and adjust I.F. trap, L1T for a minimum output on zero bias and 36.875 Mc/s A.M. signal.

7. Check response curves on Channel 0 to Channel 11 and adjust the plate and grid windings if the curves are outside the limits. Note: The only adjustment allowed for aerial adjustments are those necessary to enable overall curves to be obtained. The adjustment must be restricted to bringing the aerial response curve correct whilst observing the input circuit response, i.e. Steps 1 and 2 for the particular channel Windings La and Lb only may be adjusted without checking the neutralising for a particular channel.
   It is advisable to check the oscillator injection to be in excess of 1.5 volts on all channels after alignment using a Voltohmyst with a 100K ohm resistor in series with the d.c. probe to TP1T.

SERVICE NOTES.

If it is necessary to remove the rotor assembly to gain access to components, the following procedure should be carried out:

1. Remove the tuner side covers and base plate.

2. Remove the detent spring and roller.

3. Remove the earthing clip from the front bearing.

4. Remove two screws holding the front bearing to the assembly and slide the bearing off the spindle.

5. Remove the rear retaining spring and lift the rotor assembly from the assembly.

All components are now accessible for measurement and/or replacement.

Remounting the rotor is the reverse of the above.

CLEANING CONTACTS.

The rotor studs, and the stator phosphor-bronze strips have a silver overlay. Furthermore, a substantial coating of gold-plating is used on both the rotor and stator working surfaces to ensure long life. It is, however, imperative that only the proper lubricant made to A.W.A. Specifications M247 (mixture of Vaseline and Genklene) be used and applied with a soft cloth or brush when cleaning the contacts.

Channel Number	Band	Receiver Osc. Freq. Mc/s. Video	Sound	Carrier Freq. Mc/s. I.F. = 36.875 Mc/s.
0	45-52	46.25	51.75	83.125
1	56-63	57.25	62.75	94.125
2	63-70	64.25	69.75	101.125
3	85-92	86.25	91.75	123.125
4	94-101	95.25	100.75	132.125
5	101-108	102.25	107.75	139.125
5A	137-144	138.25	143.75	175.125
6	174-181	175.25	180.75	212.125
7	181-188	182.25	187.75	219.125
8	188-195	189.25	194.75	226.125
9	195-202	196.25	201.75	233.125
10	208-215	209.25	214.75	246.125
11	215-222	216.25	221.75	253.125

TUNER PART NO. 45093 PARTS LIST

CIRC. REF.	DESCRIPTION			CODE NO.
	RESISTORS			
	All Resistors composition type unless otherwise stated.			
R1T	5.6K ohms	±20%	½ watt	A611288
R2T	1K ohms	±20%	½ watt	A608030
R3T	33K ohms	±20%	½ watt	A614463
R4T	2.2K ohms	±10%	1 watt	A609446
R5T	2.2K ohms	±20%	½ watt	A609445
R6T	4.7K ohms	±10%	1 watt	A610966
R7T	10K ohms	±20%	½ watt	A612032
R9T	2.2K ohms	±20%	½ watt	A609445
R11T	4.7K ohms	± 5%	½ watt	A610972
R10T	47K ohms	±20%	½ watt	A614968
	DESCRIPTION			
	CAPACITORS			
C1T	3.3pF ±10% NPO disc			A220164
C2T	2.2pF ±5% NPO disc			A221494
C3T	18pF ±5% NPO feed thru			A220776
C4T	3.3pF ±10% NPO disc			A220164
C5T	15pF ±5% NPO disc			A220710
C6T	0.001μF +100% —0% Hi-K feed thru			A225011
C7T	1-5pF trimmer			A231144
C8T	0.5-3pF trimmer			A231122
C9T	100pF ±7½% N3300 feed thru			A222246
C10T	27pF ±5% NPO disc			A221071
C11T	0.001μF +100% —0% Hi-K feed thru			A225011
C12T	0.5-3pF trimmer			A231122
C13T	0.001μF +100% —0% Hi-K feed thru			A225011
C14T	0.68pF Special			A49915
C15T	470pF ±20% K2000 tubular			A221972
C16T	39pF ±10% N750 tubular			A221294
C17T	5.6pF +5% —0% N150 disc			A220274
C18T	5.6pF ±2½% N150 disc			A220276
C19T	5.6pF +0% —5% N150 disc			A220275
C20T	0.001μF +100% —0% Hi-K feed thru			A225011
C21T	0.1μF ±10% 160v			A227086
C22T	220pF ±20% Hi-K disc			A223205
CNT	Neutralising Capacitor			
	INDUCTORS			PART NO.
L1T	36.875 Mc/s Trap			A41859
L2T	Converter I.F. Coil			A41859
L3T	Not used			
L4T	Oscillator Filament Choke			A41866
L5T	Screen Inductor Coil			A45017

La-Lh TUNING COIL ASSEMBLY

Channel No.	Australia
Channel 0	A45055
Channel 1	A45056
Channel 2	A45057
Channel 3	A45058
Channel 4	A45059
Channel 5	A45060
Channel 5A	A45061
Channel 6	A45062
Channel 7	A45063
Channel 8	A45064
Channel 9	A45065
Channel 10	A45066
Channel 11	A45067
Strip Identification Code	AN0, AN1, etc.

	TRANSFORMERS	PART NO.
T1T	Balun Assembly	44009

VALVES

V11 Radiotron 6GK5
V12 Radiotron 6HG8

MECHANICAL REPLACEMENT PARTS

Bearing, Die-cast	A44055
"C" Clip	A6994
Clutch Assembly, Fine Tuning	A44052
Contact, Earth, Detent	A44007
Cover	A44062
Cover, Slotted	A44063
Gear, Moulded, Fine Tuning	A44056
Lever, Detent	A44059
Roller Assembly, Detent	A44060
Spring, Earthing Front Bearing	A40537
Spring, Loading, Clutch	A44151
Spring, Rotor, Retaining	A40521
Stator Assembly	A44002
Comprising:	
Contact (10)	A44004
Locking Rod, Long	A44005
Locking Rod, Short	A44006
Stator, Moulded	A44003

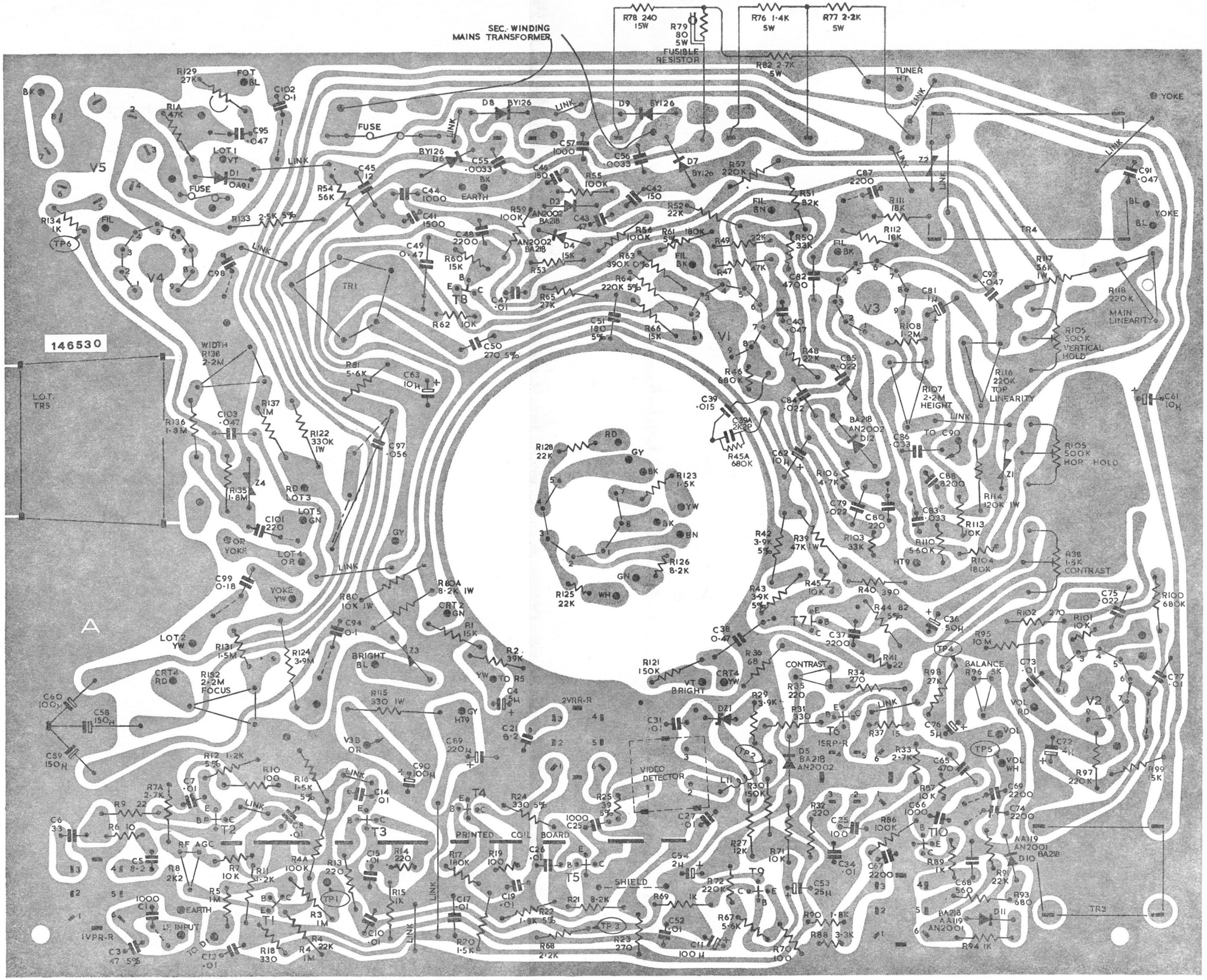

P.C.B. DIAGRAM 58-00 SERIES TV CHASSIS

BOARD VIEWED FROM COPPER SIDE

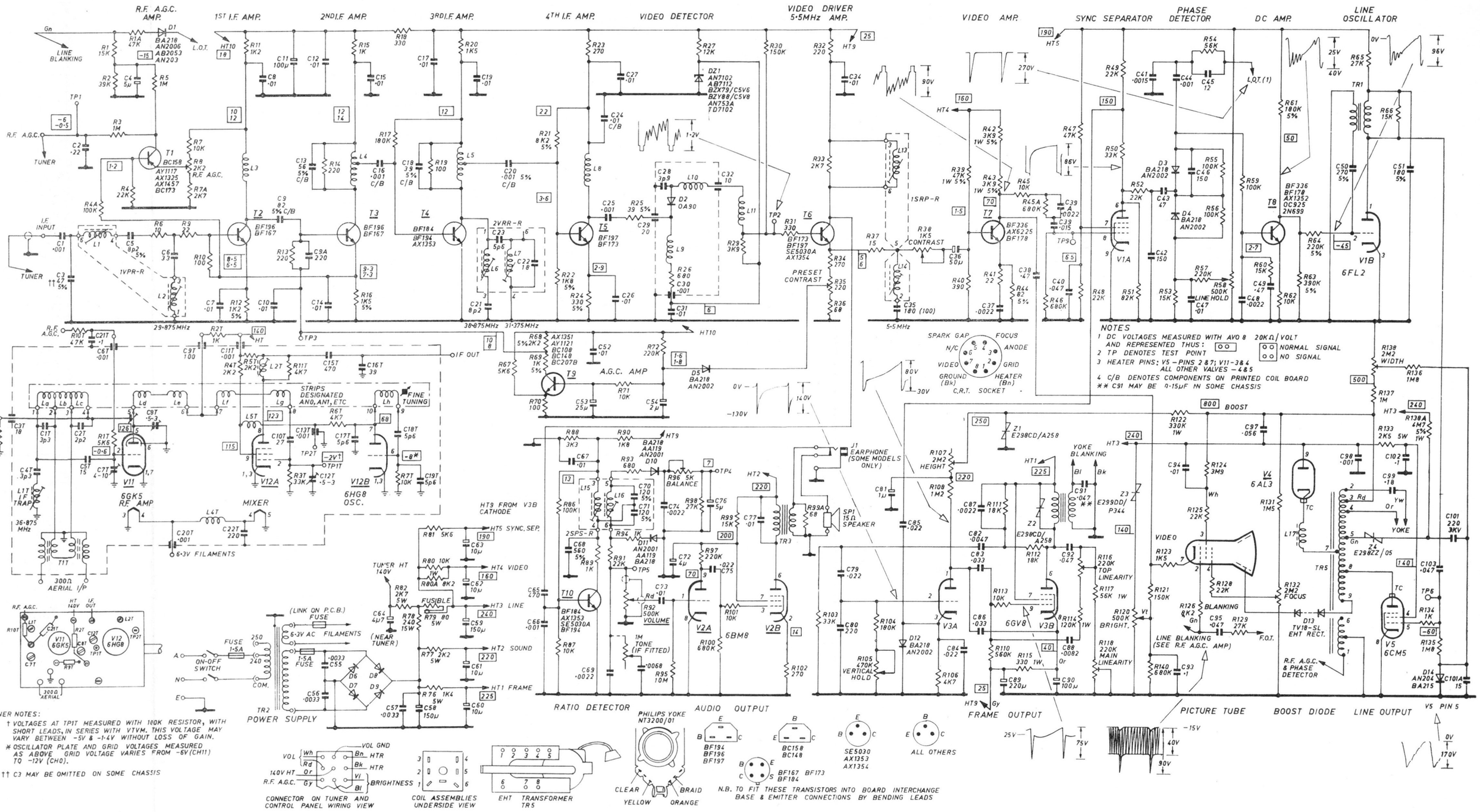
R.F. A.G.C. AMP.
1ST I.F. AMP.
2ND I.F. AMP.
3RD I.F. AMP.
4TH I.F. AMP.
VIDEO DETECTOR
VIDEO DRIVER 5·5MHz AMP.
VIDEO AMP.
SYNC SEPARATOR
PHASE DETECTOR
DC AMP.
LINE OSCILLATOR
LINE BLANKING
L.O.T.
R.F. A.G.C.
TUNER
I.F. INPUT
1VPR-R
2VPR-R
1SRP-R
2SPS-R
29·875MHz
30·875MHz
31·375MHz
5·5MHz
IF OUT
A.G.C. AMP
PRESET CONTRAST
CONTRAST
SPARK GAP
FOCUS
ANODE
GRID
HEATER (Bn)
GROUND (Bk)
VIDEO
N/C
C.R.T. SOCKET
NOTES
1 DC VOLTAGES MEASURED WITH AVO 8 20KΩ/VOLT AND REPRESENTED THUS: ○○
2 TP DENOTES TEST POINT
3 HEATER PINS: V5 – PINS 2 & 7; V11-3 & 4 ALL OTHER VALVES – 4 & 5
4 C/B DENOTES COMPONENTS ON PRINTED COIL BOARD
** C91 MAY BE 0·15μF IN SOME CHASSIS
NORMAL SIGNAL
NO SIGNAL
STRIPS DESIGNATED AN0, AN1, ETC
FINE TUNING
6GK5 RF AMP
MIXER
6HG8 OSC.
6·3V FILAMENTS
300Ω AERIAL I/P
36·875 MHz
IF TRAP
BOOST
HEIGHT
YOKE BLANKING
EARPHONE (SOME MODELS ONLY)
SPI 15Ω SPEAKER
BALANCE
VOLUME
TONE (IF FITTED)
HT9 FROM V3B CATHODE
HT5 SYNC. SEP.
HT4 VIDEO
HT3 LINE
HT2 SOUND
HT1 FRAME
TUNER HT 140V
(NEAR TUNER)
FUSIBLE
(LINK ON P.C.B.) FUSE
6·3V AC FILAMENTS
1·5A FUSE
ON-OFF SWITCH
FUSE 1·5A
POWER SUPPLY
RATIO DETECTOR
AUDIO OUTPUT
FRAME OUTPUT
PICTURE TUBE
BOOST DIODE
LINE OUTPUT
V5 PIN 5
BLANKING (SEE R.F. A.G.C. AMP)
R.F. A.G.C. & PHASE DETECTOR
TOP LINEARITY
BRIGHT.
MAIN LINEARITY
VERTICAL HOLD
F.O.T.
PHILIPS YOKE NT3200/01
CLEAR
BRAID
YELLOW
ORANGE
BF194 BF196 BF197
BC158 BC148
SE5030 AX1353 AX1354
ALL OTHERS
BF167 BF173 BF184
N.B. TO FIT THESE TRANSISTORS INTO BOARD INTERCHANGE BASE & EMITTER CONNECTIONS BY BENDING LEADS
CONNECTOR ON TUNER AND CONTROL PANEL WIRING VIEW
COIL ASSEMBLIES UNDERSIDE VIEW
EHT TRANSFORMER TR5
TUNER NOTES:
† VOLTAGES AT TP1T MEASURED WITH 100K RESISTOR, WITH SHORT LEADS, IN SERIES WITH VTVM. THIS VOLTAGE MAY VARY BETWEEN -5V & -1·4V WITHOUT LOSS OF GAIN.
* OSCILLATOR PLATE AND GRID VOLTAGES MEASURED AS ABOVE GRID VOLTAGE VARIES FROM -6V (CH11) TO -12V (CH0).
†† C3 MAY BE OMITTED ON SOME CHASSIS

MISCELLANEOUS PARTS

NOTE: Prefix "A" indicates A.W.A. number.
NOTE: Prefix "T" indicates Thorn number.

MODEL K117R

Back Assembly, Printed	A76377/002
Bracket Rear Tuner	A47354
Bracket Hinge	T135286
Bracket Board Screwing	T135287
Cabinet Assembly, Maple	A47886/001
Teak	A47886/002
Black	A47886/003
Stone White	A47886/004
Including:	
Bracket, Handle (2)	A47229
Foot (4)	A46999/001
Handle, Black (2)	A45799/001
Nut, Speed Clip, SNU1864	A492093
Chassis	58-03
Extension Shaft, Fine Tune	A46464/013
Horizontal Linearity Sleeve	T839024
Hinge, Pivot	T469027
Insulator Switch	A46480
Knob, Assembly, Channel Select	A46852/001
Knob Assembly, Controls	A46796/001
Leg Pack, Teak, Black, Stone White	A47048/001
Leg Pack, Maple	A47048/002
Mask Assembly	A46952
Including:	
Fret, Printed	A46955
Mask, Painted	A46953
Picture Tube, 23"	A59-23W/R
Screw Thumb, ¼" W x ½"	A778041
Speaker, 6" x 4"	A56335/014
Spring Earth Assembly	A47885/004
Tuner Neutrode	A45093
Variable Controls:	
500K/A Picture	A623100
500K/S16 and D.P.S.T. Switch On/Off—Sound	A623103
Yoke Deflection:	
Philips NT3200/01	T360017
or Rola TV7000	T360016

MODEL NK129R

Back Assembly, Printed	A76377/005
Baffle Assembly, Speaker	A46652
Comprising:	
Baffle	A46653
Cloth Sarlon 2030	A212190
Trim, Baffle	A46613/001
Trim, Baffle, Bottom	A46655
Trim, Baffle, Top	A46654/001
Bracket Mtg. Pix Tube, Bottom "C"	A45625
Bracket Mtg. Pix Tube, Top "D"	A45615
Bracket Tuner Mtg.	A47354
Bracket, Hinge	T135286
Bracket, Board Scrg.	T135287
Cabinet Assembly, Teak	A47940/001
Mahogany	A47940/002
Maple	A47940/003
Satin Walnut	A47940/004
Castor Bassick (4)	A196006
Chassis	58-11
Disc Assembly, Channel Indicator	A46633
Comprising:	
Clip, Spire SCA-0725	A210979
Disc, Painted	A46648
Hub, Die Cast (A45108)	A401914
Extension Shaft, Fine Tune	A46464/013
Hinge Pivot	T469027
Horizontal Linearity Sleeve	T839024
Insulator Switch	A46480
Knob Assembly, Channel Select.	A46826/001
Knob Assembly, Control	A46747/001
Mask Assembly	A46818/007
Comprising:	
Cloth, Lantor	A46983
Escutcheon Channel Indicator	A46640
Fret Assembly	A46583/010
Including:	
Nameplate "Twenty Five"	A46656
Mask, Painted	A47075
Nameplate, Controls	A47077/002
Nameplate, Deep Image	A46771
Picture Tube, 25"	25TP4/R
Screw, Thumb ¼" W x ½"	A778041
Shield, Lamp Channel Indicator	A46022
Spacer, Channel Select Knob	A46859
Speaker, 9" x 6"	A56413/016
Spring Earth Assembly	A47885/001
Tuner Neutrode	A45093
Variable Controls:	
500K/A Picture	A623100
500K/S16 Sound	A623101
Switch Power D.P.S.T.	A857372
Yoke Deflection:	
Philips NT3200/01	T360017
or Rola TV7000	T360016

MODEL NK145R

Back Assembly, Printed	A76377/004
Bracket, Rear Tuner	A47354
Bracket, Hinge	T135286
Bracket, Board Scrg.	T135287
Cabinet Assembly, Teak	A47914/001
Mahogany	A47914/002
Maple	A47914/003
Satin Walnut	A47914/004
Teak V.	A47914/006
Walnut V.	A47914/007
Maple V.	A47914/008
Chassis	58-07
Disc Assembly, Channel Indicator	A47158
Comprising:	
Clip, Spire SCA-0725	A210979
Disc, Painted	A47159
Hub, Die Cast (A45108)	A401914
Screw, 6BA x ⅜" (2)	A716012
Washer, 6BA (2)	A15722
Escutcheon, Painted, Ch. Indicator	A47140
Extention Shaft, Fine Tune	A46464/005
Hinge Pivot	T469027
Horizontal Linearity Sleeve	T839024
Insulator, Switch	A46480
Knob Assembly, Chan. Select.	A46826/001
Knob Assembly Controls	A46747/001
Lamp Pilot—6V	A428105
Mask Assembly	A47182/001
Comprising:	
Clip, Trimplate Retaining	A47193
Clip, Retaining	A47186/002
Lantor Cloth	A47185
Grille, Speaker	A47172/002
Trim, Extruded Section, L.H.	A47168
Trim, Extruded Section, R.H.	A47167
Trim, Extruded Section, Short	A47166
Name Plate, Screen Printed (R.H.)	A47232
Backing Paper (R.H.)	A47169
Nameplate (L.H.)	A47236
Trimplate, Screen Printed (L.H.)	A47233
Backing Paper (L.H.)	A47238
Badge, AWA (L.H.)	A47237/003
Nut, SCO-1863-17-0 (L.H.	A492176
Picture Tube, 24"	A61-120W/R
Screw, Thumb ¼" x Whit. ¾"	A778042
Shield, Lamp Channel Indicator	A46022
Spring, Earth Assembly	A47885/002
Speaker, 6" x 4"	A56335/014
Tuner Neutrode	A45093
Variable Controls:	
500K/A Picture	A623100
500K/S16 Sound	A623101
Switch Power	A857372
Yoke Deflection:	
Philips NT3200/01	T360017
or Rola TV7000	T360016

MODEL KR148R

Aerial Panel Assembly	A47277
Comprising:	
Panel Aerial	A47278
Aerial Rod (2 off)	A103554
Cable Aerial	A56536
Back Assembly, Printed	A76377/001
Badge Retravision A46929/001	A119190
Bracket, Rear Tuner	A47354
Bracket, Hinge	T135286

Bracket, Board Scrg.	T135287
Cabinet Assembly, Teak	A47912/001
Mahogany	A47912/002
Maple	A47912/003
Satin Walnut	A47912/004
Chassis	58-06
Disc Assembly, Numbered	A47099
Comprising:	
Clip, Spire SCA-0725	A210979
Hub, Die Cast (A45108)	A401914
Number Disc, Painted	A46997
Extension Shaft, Fine Tuning	A46464/015
Horizontal Linearity Sleeve	T839024
Hinge, Pivot	T469027
Insulator Switch	A46480
Knob Assembly, Channel Selector	A46369/004
Knob Assembly Controls	A46747/001
Kine Mtg. W/Assembly "F"	A46354
Kine Mtg. W/Assembly "G"	A46745
Mask Assembly	A46787/013
Comprising:	
Escutcheon (C/S No.'s)	A47140
Fret Finished	A47143/002
Mask, Painted	A47141
Nameplate, Screen Printed	A47147/002
Trim Clip	A47146/002
Trim Panel, Painted	A47144
Picture Tube, 23"	A59-23W/R
Rack Paper	A47279
Speaker, 6" x 4"	A56335/014
Spring Earth Assembly	A47885/001
Tuner Neutrode	A45093
Variable Controls:	
500K/A Picture	A623100
500K/S16 Sound	A623101
Switch, Power	A857372
Yoke Deflection:	
Philips NT 3200/01	T360017
or Rola TV7000	T360016

MODEL KR159R

Back Assembly, Cabinet	A76377/001
Badge, "Retravision"—A46929-003	A119185
Bracket, Hinge	T135286
Bracket, Board Scrg.	T135287
Cabinet Assembly	A47876*
*Colours available are: Teak V., Walnut V., Maple V.	
Extension Shaft Fine Tune	A46464/015
Horizontal Linearity Sleeve	T839024
Hinge, Pivot	T469027
Insulator Switch	A46480
Knob Assembly, Channel Selector	A46852/002
Knob Assembly, Controls	A46796/002
Knob Assembly, Power	A46747/004
Legs, Packed	A47187*
Mask Assembly	A47881
Comprising:	
Fret, Finished	A46758/003
Mask, Finished	A47882
Nameplate, Finished	A46760/011
Plate, Name	A46757/005
Picture Tube, 23"	A59-23W/R
Screw, Thumb ¼" W x ¾"	A778042
Spring, Earth Assembly	A47885/002
Tuner Neutrode	A45093
Variable Controls:	
500K/A Picture	A623100
500K/S16 Sound	A623101
Switch, Power, D.P.S.T.	A857372
Yoke Deflection:	
Philips NT3200/01	T360017
or Rola TV7000	T360016

*Specify colours to match.

MODEL NK160R

Back Assembly, Printed	A76377/003
Bracket, Rear Tuner	A46668
Bracket, Hinge	T135286
Bracket, Board Scrg.	T135287
Cabinet Assembly, Teak	A47904/001
Mahogany	A47904/002
Maple	A47904/003
Satin Walnut	A47904/004
Chassis	58-04
Extension Shaft, Fine Tuning	A46464/017
Horizontal Linearity Sleeve	T839024
Hinge, Pivot	T469027
Insulator Switch	A46480
Knob Assembly, Channel Selector	A422902
Knob Assembly, Controls	A47392
Kine Mtg. W/Assembly Top "F"	A46354
Kine Mtg. W/Assembly Bottom "A"	A45623
Legs, Packed, Teak	A46703/001
Maple	A46703/002
Walnut	A46703/003
Leg Spacer (4)	A41565
Mask Assembly	A47387
Comprising:	
Mask, Painted	A47616
Nameplate	A46694/001
Nameplate, Controls	A47615
Plate Mtg. Weld Assembly	A47388
Picture Tube, 23"	A59-23W/R
Speaker, 6" x 4"	A56335/014
Spring, Earth Assembly	A47885/001
Tuner Neutrode	A45093
Variable Controls:	
500K/A Picture	A623106
500K/S16 and D.P.S.T. Switch, Sound—On/Off	A623107
Yoke Deflection:	
Philips NT3200/01	T360017
or Rola TV7000	T360016

MODEL K161R

Back Assembly, Printed	A76377/002
Bracket, Rear Tuner	A47354
Bracket, Hinge	T135286
Bracket, Board Scrg.	T135287
Cabinet Assembly, Maple	A47886/001
Teak	A47886/002
Black	A47886/003
Stone White	A47886/004
Including:	
Bracket, Handle (2)	A47229
Foot (4)	A46999/001
Handle, Auburn Tan	A45799/002
Handle, Black	A45799/001
Nut, Speed Clip SNU 1864	A492093
Chassis	58-03
Extension Shaft, Fine Tune	A46464/013
Horizontal Linearity Sleeve	T839024
Hinge, Pivot	T469027
Insulator Switch	A46480
Knob Assembly, Channel Selector	A46852/003
Knob Assembly, Control	A46796/001
Leg Pack, Teak, Black, Stone White	A47048/001
Leg Pack, Maple	A47048/002
Mask Assembly	A47494
Including:	
Fret, Printed	A47495/001
Mask, Painted	A46953/001
Trim, Channel Nos. A46439	A908792
Picture Tube, 23"	A59-23W/R
Screw, Thumb ¼" W x ½"	A778041
Speaker, 6" x 4"	A56335/014
Spring, Earth Assembly	A47885/004
Tuner Neutrode	A45093
Variable Controls:	
500K/A Picture	A623100
500K/S16 D.P.S.T. Switch, On/Off, Sound	A623103
Yoke Deflection:	
Philips NT3200/01	T360017
or Rola TV7000	T360016

MODEL KR175R

Back Assembly, Printed	A76377/011
Bracket, Mtg. Pix Tube Bottom "C"	A45625
Bracket, Mtg. Pix Tube Top "D"	A45615
Bracket, Spkr. Mtg. (4)	A68807

Bracket, Tuner Mtg.	A47354
Bracket, Hinge	T135286
Bracket, Board Scrg.	T135287
Cabinet Assembly, Teak	A47938/001
Mahogany	A47938/002
Maple	A47938/003
Satin Walnut	A47938/004
Caster Caford 2-7, Chrome	
Chassis	58-11
Disc Assembly Channel Indicator	A47099
Comprising:	
Clip, Spire SCA-0725	A210979
Disc, Painted	A46997
Hub, Die Cast (A45108)	A401914
Extension Shaft, Fine Tune	A46464/011
Hinge, Pivot	T469027
Horizontal Linearity Sleeve	T839024
Insulator Switch	A46480
Knob Assembly, Channel Select	A46826/001
Knob Assembly, Control	A46747/001
Mask Assembly (Satin Walnut, Mahogany)	A46818/011
Mask Assembly (Maple, Teak)	A46818/012
Comprising:	
Escutcheon C/S No.	A46640/001
Fret, Painted (Satin Walnut, Mahogany)	A47563/001
Fret, Painted (Maple, Teak)	A47563/002
Mask Painted	A46821
Panel, Control	A47565
Picture Tube, 25"	25TP4/R
Rack, Magazine	A47562
Srew, Thumb ¼" W x ¾"	A778042
Shield, Lamp	A46022
Spacer Chan. Select Knob	A46859
Speaker, 6" x 4"	A56335/014
Spring, Earth Assembly	A47885/001
Tuner Neutrode	A45093
Variable Controls:	
500K/A Picture	A623100
500K/S16 Sound	A623101
Switch Power, D.P.S.T.	A857372
Yoke Deflection:	
Philips NT3200/01	T360017
or Rola TV7000	T360016

MODEL K180R

Back Assembly, Printed	A76377/009
Bracket, Mtg. Pix Tube Bottom "C"	A45625
Bracket, Mtg. Pix Tube Top "D"	A45615
Bracket, Tuner Mtg.	A47354
Bracket, Hinge	T135286
Bracket, Board Scrg.	T135287
Cabinet Assembly, Teak	A47932/001
Mahogany	A47932/002
Maple	A47932/003
Satin Walnut	A47932/004
Chassis	58-10
Disc Assembly, Chan. Indicator	A47158
Extension Shaft, Fine Tune	A46464/010
Emblem, Hallmark	A72649/002
Escutcheon Assembly, Control	A47480
Comprising:	
Escutcheon, Chan. No.	A46640/003
Escutcheon, Control	A46831
Panel, Control, Printed	A47481
Spacer, Chan. Select Knob	A46859/001
Fret Assembly, Maple, Teak	A46838/002
Mahogany	A46838/003
Satin Walnut	A46838/010
Hinge, Pivot	T469027
Horizontal Linearity Sleeve	T839024
Insulator Switch	A56047
Knob Assembly, Chan. Select.	A46826/001
Knob Control	A47719/002
Lamp Chan. Indicator 12V	A428147
Mask Assembly, Painted	A46712/001
Picture Tube, 25"	25TP4/R
Screw, Thumb ¼" W x ¾"	A778042
Shield, Lamp Chan. Indicator	A46022
Spring, Earth Assembly	A47885/001
Speaker, 6" x 4"	A56335/014
Trim, Fret Divide L.H.	A46844
Trim Plate, Maple, Teak	A47476/001
Mahogany	A47476/002
Satin Walnut	A47476/003
Tuner Neutrode	A45093
Variable Controls:	
500K/A (LOG) Sound)	A623110
500K/B (LIN) Picture	A623111
Switch, Power, Series 625 Rocker	A56005/203
Yoke Deflection:	
Philips NT3200/01	T360017
or Rola TV7000	T360016

MODEL K181R

Back Assembly, Printed	A76377/010
Bracket, Mtg. Pix Tube Bottom "C"	A45625
Bracket, Mtg. Pix Tube Top "D"	A45615
Bracket, Tuner Mtg.	A47354
Bracket, Hinge	T135286
Bracket, Board Scrg.	T135287
Cabinet Assembly, Teak	A47937/001
Mahogany	A47937/002
Maple	A47937/003
Satin Walnut	A47937/004
Including:	
Castor, Bassick	A196006
Cloth, Colan AP425 Copper Pot.	A212192
Trim, Baffle	A46829/001
Trim, Horizontal	A46828/001
Chassis	58-10
Disc Assembly, Channel Indicator	A47158
Comprising:	
Clip, Spire SCA-0725	A210979
Disc, Painted	A47693
Hub, Die Cast (A45108)	A401914
Extension Shaft, Fine Tune	A46464/013
Emblem, Hallmark	A72649/002
Escutcheon Assembly, Control	A47480
Comprising:	
Escutcheon, Chan. No.	A46640/003
Escutcheon, Control	A46831
Panel, Control, Printed	A47481
Spacer, Chan. Select Knob	A46859/001
Fret Assembly, Maple, Teak	A46838/002
Mahogany	A46838/003
Satin Walnut	A46838/010
Hinge, Pivot	T469027
Horizontal Linearity Sleeve	T839024
Insulator Switch	A56047
Knob Assembly, Chan. Select.	A46826/001
Knob Control	A47719/002
Lamp Chan. Indicator 12V.	A428147
Mask Assembly, Painted	A46712/001
Picture Tube, 25"	25TP4/R
Shield, Lamp Chan. Indicator	A46022
Screw, Thumb ¼" W x ¾"	A778042
Speaker, 9" x 6"	A56413/016
Spring, Earth Assembly	A47885/001
Trimplate—Maple, Teak	A47476/001
Mahogany	A47476/002
Satin Walnut	A47476/003
Tuner Neutrode	A45093
Variable Controls:	
500K/A (LOG) Sound	A623110
500K/B (LIN) Picture	A623111
Switch, Power, Series 625 Rocker	A56005/203
Yoke Deflection:	
Philips NT3200/01	T360017
or Rola TV7000	T360016

MODEL K182R

Back Assembly, Printed	A76377/005
Bracket, Mounting Pix Tube Bottom "C"	A45625
Bracket, Mounting Pix Tube Top "D"	A45615
Bracket, Mounting Speaker (4)	A68807
Bracket, Tuner Mounting	A47354
Bracket, Hinge	T135286
Bracket, Board Scrg.	T135287
Cabinet—Teak	A47927/001
Mahogany	A47927/002
Maple	A47927/003
Satin Walnut	A47927/004
Teak V.	A47927/006
Walnut V.	A47927/007
Maple V.	A47927/008

Chassis	58-08
Disc Assembly, Channel Nos.	A47778
Comprising:	
Clip, Spire SCA-0725	A210979
Disc, Painted	A47779
Hub, Die Cast, A45108	A401914
Extension Shaft, Fine Tune	A46464/010
Horizontal Linearity Sleeve	T839024
Hinge, Pivot	T469027
Insulator Switch	A56047
Knob Slide Controls	A47719/002
Knob Assembly C/S	A46826/001
Legs, Packed—Maple	A47187/001
Mahogany	A47187/002
Teak	A47187/005
Satin Walnut	A47187/006
Mask Assembly	A47760
Comprising:	
Escutcheon, Chan. Indicator	A46640/003
Fret, Moulded (2)	A46758/002
Mask, Painted	A47761
Panel, Control, A47763	A551697
Picture Tube, 25"	25TP4/R
Screw, Thumb ¼" Whit. x ¾"	A778042
Shield Lamp Chan. Indicator	A46022
Spacer C/S Knob	A46859
Switch, Power	A56005/203
Speaker, 6" x 4"	A56335/014
Spring, Earth Assembly	A47885/001
Tuner Neutrode	A45093
Variable Controls:	
500K/A (Log) Sound	A623110
500K/B (Lin) Picture	A623111
Yoke Deflection:	
Philips NT3200/01	T360017
or Rola TV7000	T360016

MODEL K183R

Back Assembly, Printed	A76377/007
Baffle Speaker—A47707	A119272
Bracket, Mtg. Pix Tube "F"	A46354
Bracket, Mtg. Speaker (4)	A47217
Bracket, Tuner Mounting	A47706
Bracket, Hinge	T135286
Bracket, Board Scrg.	T135287
Cabinet—Teak	A47920/001
Mahogany	A47920/002
Maple	A47920/003
Satin Walnut	A47920/004
Teak V.	A47920/006
Walnut V.	A47920/007
Maple V.	A47920/008
Chassis	58-09
Extension Shaft, Fine Tune	A46464/018
Hinge, Pivot	T469027
Horizontal Linearity Sleeve	T839024
Insulator Switch	A46480
Knob Assembly, Channel Selector	A46353/004
Knob Assembly, Control	A46796/001
Knob Slide	A47719/002
Legs, Packed—Maple	A47187/001
Mahogany	A47187/002
Teak	A47187/005
Satin Walnut	A47187/006
Mask Assembly	A47698
Comprising:	
Mask, Finished	A47699/002
Nameplate, Deep Image A47701	A578032
Nameplate, Star Finder A47700	A578031
Picture Tube, 24"	A61-120W/R
Screw, Thumb ¼" W. x ¾"	A778042
Speaker, 6" x 4"	A56349/002
Spring, Earth Assembly	A47885
Tuner Neutrode	A45093
Variable Controls:	
500K/B (LIN) Picture	A623111
500K/S16 and D.P.S.T. Switch, Sound, On/Off	A623103
1 Meg/A Tone	A623200
Yoke Deflection:	
Philips NT3200/01	T360017
or Rola TV7000	T360016

MODEL K184R

Back Assembly, Printed	A76377/007
Badge, Hallmark	A72649/002
Bracket, Mtg. Pix Tube "F"	A46354
Bracket, Tuner Mounting	A47706
Bracket, Hinge	T135286
Bracket, Board Scrg.	T135287
Cabinet Assembly, Teak	A47924/001
Mahogany	A47924/002
Maple	A47924/003
Satin Walnut	A47924/004
Teak V.	A47924/006
Walnut V.	A47924/007
Maple V.	A47924/008
Including:	
Cloth, Sarlon A04297	A212165
Trim	A47828/001
Chassis	58-09
Extension Shaft, Fine Tune	A46464/018
Hinge, Pivot	T469027
Horizontal Linearity Sleeve	T839024
Insulator Switch	A46480
Knob, Slide	A47719/002
Knob Assembly, Control	A46796/001
Knob Assembly, Channel Selector	A46353/004
Legs, Packed—Maple	A47787/001
Mahogany	A47787/002
Teak	A47787/003
Satin Walnut	A47787/004
Mask Assembly	A47794
Comprising:	
Mask, Painted	A47699/002
Nameplate, A.W.A. A47701	A578032
Nameplate, Questar A47795	A578044
Picture Tube, 24"	A61-120W/R
Screw, Thumb ¼" W. x ¾"	A778042
Speaker, 6" x 4"	A56335/014
Spring, Earth Assembly	A47885
Tuner Neutrode	A45093
Variable Controls:	
500K/B (LIN) Picture	A623111
500K/S16 and D.P.S.T. Switch, Sound, On/Off	A623103
1 Meg/A Tone	A623200
Yoke Deflection:	
Philips NT3200/01	T360017
or Rola TV7000	T360016

MODEL K185R

Aerial Telescopic Rod	A103554
Back Assembly, Printed	A76377/008
Baffle, Speaker A47707	A119272
Bracket, Pix Tube Mtg. "F"	A46354
Bracket, Mtg. Speaker (4)	A47217
Bracket, Tuner Mounting	A47706
Bracket, Hinge	T135286
Bracket, Board Scrg.	T135287
Cabinet—Teak	A47902/001
Mahogany	A47902/002
Maple	A47902/003
Satin Walnut	A47902/004
Teak V.	A47902/006
Walnut V.	A47902/007
Maple V.	A47902/008
Chassis	58-09
Extension Shaft, Fine Tune	A46464/018
Hinge, Pivot	T469027
Horizontal Linearity Sleeve	T839024
Insulator Switch	A46480
Knob, Slide	A47719/002
Knob Assembly, Control	A46796/001
Knob Assembly, Channel Selector	A46353/004
Leg Assembly, Packed	A47784*
Comprising:	
Leg Assembly	A47486*
Includes Castor Caford, Type 2-1	A196015
Rack, Magazine	A47487
Mask Assembly	A47781
Comprising:	
Mask, Painted	A47699/002
Nameplate, A.W.A. A47701	A578032
Nameplate, Wayfarer A47782	A578042
Picture Tube, 24"	A61-120W/R

Screw, Thumb ¼" W. x ¾"	A778042
Speaker 6" x 4"	56349/002
Spring, Earth Assembly	A47885
Tuner Neutrode	A45093
Variable Controls:	
500K/B (LIN) Picture	A623111
500K/S16 and D.P.S.T. Switch, Sound, On/Off	A623103
1 Meg/A Tone	A623200
Yoke Deflection:	
Philips NT3200/01	T360017
or Rola TV7000	T360016

*Colours to be Specified.

Models K186R, NK187R, KR188R, K189R.

Back Assembly Printed:—	
K186R, KR188R, K189R	A76377/001
NK187R	A76337/006
Bracket, Rear Tuner	A47354
Bracket, Hinge	T135286
Bracket Board Scrg.	T135287
Cabinet Assembly—Teak V.	A47876/006
Walnut V.	A47876/007
Maple V.	A47876/008
Chassis	58-05
Extension Shaft, Fine Tune	A46464/007
Horizontal Linearity Sleeve	T839024
Hinge, Pivot	T469027
Insulator Switch	A56047
Knob Assembly, Channel Select.	A46353/004
Knob, Slide	A47719/002
Leg Pack—Maple	A47187/001
Teak	A47187/005
Satin Walnut	A47187/006
Mask Assembly—186 Series	A47725/005
187 Series	A47725/006
188 Series	A47725/007
189 Series	A47725/008
Comprising:	
Mask, Finished, 186, 187, 189 Series	A47726/003
Mask, Finished, 188 Series	A47726/004
Panel Escutcheon:	
186, 188 Series (A47728/001)	A551764
Panel Escutcheon, 187 Series (A47822/001)	A551767
Panel Escutcheon, 189 Series (A47822)	A551766
Picture Tube, 23"	A59-23W/R
Screw, Thumb ¼" Whit. x ¾"	A778042
Spacer, C/S Knob	A46639/001
Speaker, 6" x 4"	A56335/014
Spring, Earth Assembly	A47885/002
Switch, Power	A56005/203
Tuner Neutrode	A45093
Variable Controls:	
500K/A (LOG) Sound)	A623110
500K/B (LIN) Picture	A623111
Yoke Deflection:	
Philips NT3200/01	T360017
or Rola TV7000	T360016

MODEL P9R

Back Assembly, Cabinet	A47830/001
Including:	
Aerial, Telescopic, YOKOWO F.A. 00627 (2)	A103556
Hook Power Cord (2)	A45220/003
Insulator Aerial	A46191
Bracket, Hinge	T135286
Bracket, Board Scrg.	T135287
Cabinet Assembly—Teak V.	A47837/006
Maple V.	A47837/008
Chassis	58-01
Extension Shaft, Fine Tune	A46464/008
Handle Assembly	
Comprising:	
Bracket Clamp	A47866
Handle	A45799/001
Nut, 2BA	A493520
Screw, 2BA x ½", PH/HD	A726316
Washer, 2BA, Type 40	A921232
Hinge, Pivot	T469027
Horizontal Linearity Sleeve	T839024
Insulator Switch	A56047
Knob, Slide Control	A47719/002
Knob Assembly, Channel Selector	A46353/004
Mask Assembly	A47835
Comprising:	
Escutcheon Control	A47718
Mask, Painted	A47713
Nameplate	A46771/001
Picture Tube, 20"	A50-120W/R
Power Switch, Series 625 Rocker	A56005/203
Resis. Var. 500K/B (LIN) Picture	A623111
Resis. Var. 500K/A (LOG) Sound	A623110
Spring, Earthing Pic. Tube	A47841
Tuner Neutrode	A45093
Yoke Deflection:	
Philips NT3200/01	T360017
or Rola TV7000	T360016

MODEL K195R

Back Assembly, Printed	A76377/012
Bracket, Board Screwing	T135287
Bracket, Hinge	T135286
Bracket, Tuner Mounting	A47354
Cabinet—Teak	A47944/001
Mahogany	A47944/002
Maple	A47944/003
Satin Walnut	A47944/004
Teak V.	A47944/006
Walnut V.	A47944/007
Maple V.	A47944/008
Chassis	A58-12
Disc Assembly, Numbered	A47692
Comprising:	
Clip, Spire SCA-0725	A210979
Disc, Painted	A47693
Hub, Die Cast (45108)	A401914
Screw, 6BA x ⅜" (2)	A716012
Washer, 6BA (2)	A15722
Disc Spacer, Numbered	A47954
Extension Shaft, Fine Tuning	A46464/006
Fuse Holder and Cable Assembly	A56825
Front Panel Assembly	A47946
Comprising:	
Front Panel	A47949
Control Panel, Printed	A47947
Fret	A47154/002
Lantor, Cloth A46983	A212167
Hinge, Pivot	T469027
Knob Assembly, Channel Selector	A46826/001
Knob, Control, Sliding	A47719/002
Leg Assembly Pack—Maple	A47187/001
Mahogany	A47187/002
Teak	A47187/005
Satin Walnut	A47187/006
Lamp, 6V	A428105
Mask Assembly	A47182/002
Mesh, Cabinet Back A47877	A118867
Nut, Adjusting, Picture Tube (4)	A47180
Picture Tube, 24"	A61-120W/R
Srew, Thumb ¼" x ¾" Whit.	A778042
Shield Lamp, Ch. Indicator	A46022
Sleeve, Linearity	T839024
Speaker, 6" x 4"	A53400
Spring, Earthing Assembly	A47885/002
Tuner Neutrode	A45093
Variable Controls:	
Picture 500K/B (LIN)	A623111
Sound 500K/A (LOG)	A623110
Switch, Power	A56005/203
Switch, Insulator	A56047
Yoke Deflection:	
Philips NT3200/01	T360017
or Rola TV7000	T360016

NOTE: Prefix "A" indicates A.W.A. number.

Prefix "T" indicates Thorn number.

AWA