ALPINE SERVICE MANUAL

FM/AM Compact Disc Receiver

CD Shuttle Controller

COMPACT disc DIGITAL AUDIO

- Serial Numbers after No. 50910101 for CDE-7821 Model only.
- The model described in this manual is developed from Model CDE-7821/CDE-7820.
  For information that is not mentioned in this service manual, refer to the Service Manual・CDE-7821/CDE-7820 (Part No. 68E21970S01).
- For the CD player mechanism parts (DP24L010) of this model, refer to the Service Manual・DP-L Series (Part No. 68E23246S01).

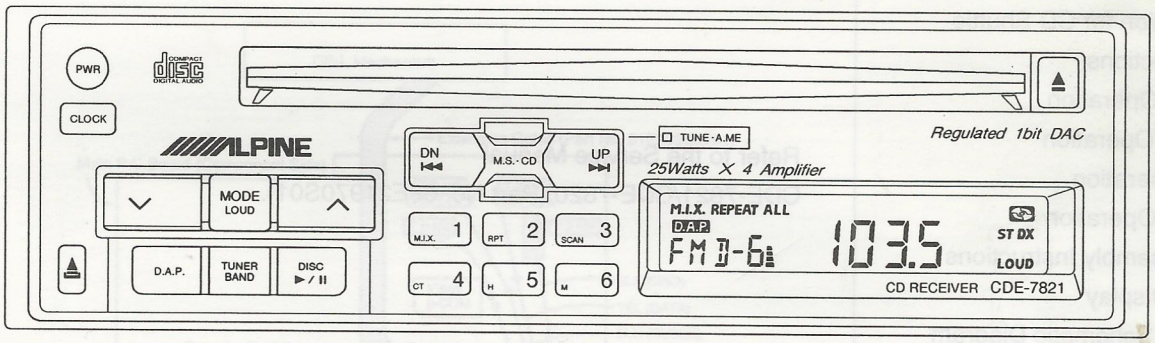

CDE-7821 REVISED/ CDE-7820S

Contents

Specifications
In Case of Difficulty
Indication for CD Shuttle
Connections
Basic Operation
Radio Operation
CD Operation
Clock Operation
Disassembly Instructions
LCD Display
Tuner Schematic Diagram
Exploded View (Cabinet)
Packing Method View

Refer to the Service Manual
CDE-7821/CDE-7820 (Part No. 68E21970S01).

Servo Monitor (Part No. 01E20845S01)

I. Purpose

DP-L mechanism built-in CDE-7821 performs digital signal processing in the insideof Digital Servo LSI and the outside alignment circuit builds in to this LSI and each alignments are automatic.

This DT Mechanism Servo Monitor is jig for the automatic alignment circuitry.
Please refer to the following list for the reference;

1. LED indicates the alignment.
2. Diagnosis of automatic alignment.
3. LED indicates a failure item for easy failure analysis of servo circuitry.

External View

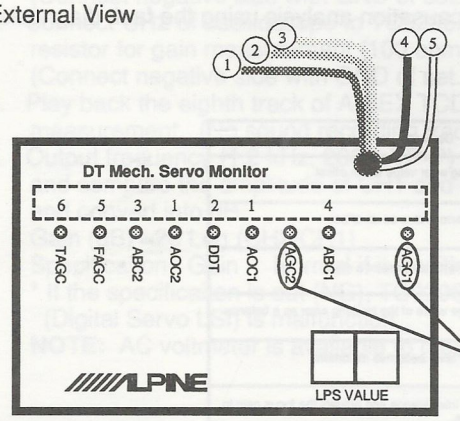

	①	②	③	④	⑤
Wire Color	Yellow	Green	Blue	Black	Red
Name	Data	CE	Clock	Ground	Battery

※ For this digital servo LSI, no adjustment was made.

* The numbers of the automatic alignment sequence.

II. Connection Points and Connection Method

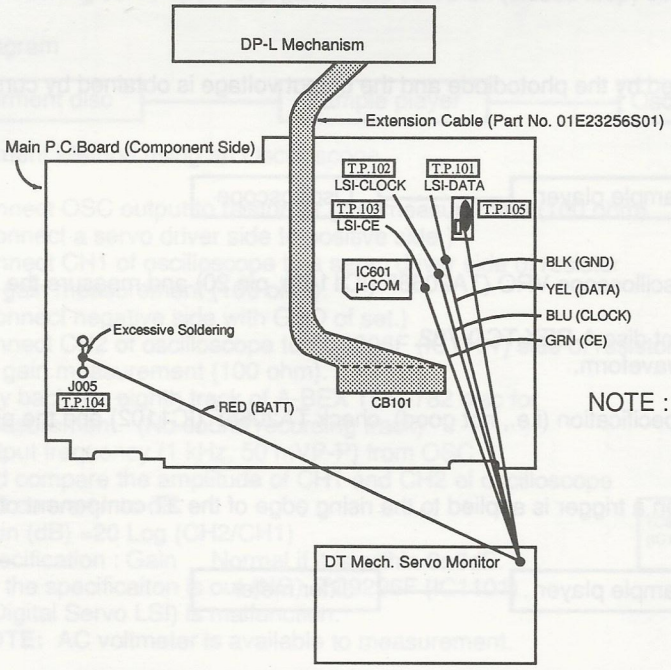

NOTE : For the Test Points (T.P.101～105), refer to the Parts Layout on P.C.Boards and Wiring Diagram.

Connect each of the wires to the Test point as illustrated in the diagram.

* Be very careful not to shorts the test points since they are located close together.

* DT Mechanism Servo Monitor can be used for the DP-L mechanism.

III. Operating Specifications

The automatic adjustment operations of the CDE-7821 are performed by output of the commands of the various adjustment items from the main microprocessor. Adjustments are performed in response to these commands by the digital servo LSI. This servo monitor jig receives the signal returned to the main microprocessor from the digital servo LSI and causes the LED to light or go off. The adjustment condition (of either completed or not yet completed) of the various adjustment items can be checked using the lighting condition of this LED.
The following test discs are required for the good/fault judgment:

1. A-BEX TCD-721 (6th track - 1.2mm) : Scratch test disc
2. A-BEX TCD-782 : Signal test disc

Measures to be Taken Corresponding to the LED Indication

1. When a LED other than FAGC or TAGC lights, perform the fault causation analysis using the fault diagnosis chart according to the LED indication.

i) LED indications

Lit : OK Unlit : Fault

Adjustment Order	LED Name	Adjustment Order	Contents
1	AOC2	Tracking offset adjustment	Corrects the tracking error value as an offset.
	AOC1	Focus offset adjustment	Corrects the focus error value as an offset.
2	DDT	Disc detection	Detects the presence or absence of a disc.
3	ABC2	Tracking balance adjustment	Corrects the average value of the tracking error as a balance value.
4	ABC1	Focus balance adjustment	Correct until the RF level becomes maximum.
5	FAGC	Focus fine gain adjustment	Introduces external interference and adjusts the focus gain to an appropriate value.
6	TAGC	Tracking fine gain adjustment	Introduces external interference and adjusts the tracking gain to an appropriate value.

ii) Seven-Segment LED (LPS Value)

Not used since this model is a single CD player. Indication shows "00".

Measurements

A. RF Signal Level Measurement

The main beam of the returning light is received by the photodiode and the output voltage is obtained by current-voltage conversion of A+B+C+D.

1. Block Diagram

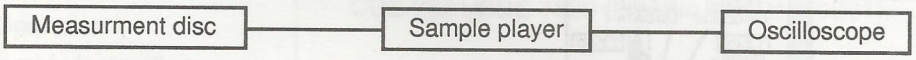

2. Measurement Method

(a). Connect the ground terminal of the oscilloscope VRO (TA2066F (IC1102), pin 20) and measure the RFO signal (of TA2066F (IC1102), pin 21).
(b). Play the first track of the measurement disc A-BEX TCD-782.
(c). Read the peak-to-peak value of the waveform.
Specification: 1.2+0.3, -0.2V
* When the value is outside of the specification (i.e., not good), check TA2066F (IC1102) and the pick-up.

B. Jitter Measurement

The standard deviation of the pulse width when a trigger is applied to the rising edge of the 3T component of the RF signal.

1. Block Diagram

2. Measurement Method

(a). Connect the ground terminal of the jitter meter to VRO (TA2066F (IC1102), pin 20) and measure the RFO signal (of TA2066F (IC1102), pin 21).
(b). Play the first track of the measurement disc A-BEX TCD-782.
(c). Read the indicated value of the jitter meter.
Specification: 25nS or less
* When the value is outside of the specification, check TA2066F (IC1102) and the pick-up.

C. Focus Servo Gain Measurement

Measure the focus servo open loop gain in the servo-on (closed loop) condition.

1. Block Diagram

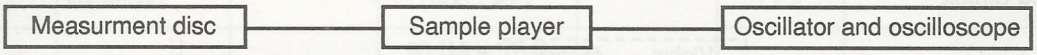

2. Measurement Method using an Oscillator and an Oscilloscope

(a). Connect OSC output to rsistor for gain measurement (100 ohm). (Connect a servo driver side to positive side.)
(b). Connect CH1 of oscilloscope to a servo driver side of resistor for gain measurement (100 ohm). (Connect negative side with GND of set.)
(c). Connect CH2 of oscilloscope to TC9296F (IC1101) side of resistor for gain measurement (100 ohm). (Connect negative side with GND of set.)
(d). Play back the eighth track of A-BEX TCD-782 disc for measurement. (No sound recording track)
(e). Output frequency (1.2 kHz, 200 mVP-P) from OSC and compare the amplitude of CH1 and CH2 of oscilloscope and convert into dB.
Gain (dB) =20 Log (CH2/CH1)
Specification : Gain Normal if it is within 0±3dB.
* If the specificaiton is out (NG), TC9296F (IC1101) (Digital Servo LSI) is malfunction.
NOTE: AC voltmeter is available to measurement.

3. Connection (Example)

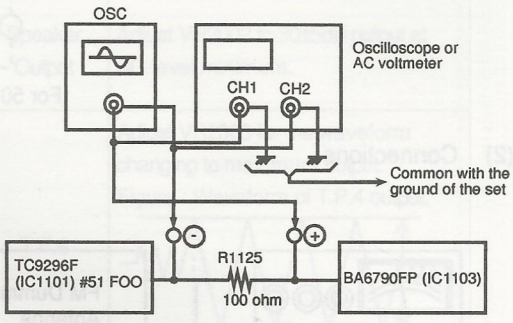

* FOO: Focus drive output

D. Tracking Servo Gain Measurement

Measure the tracking servo open loop gain in the servo-on (closed loop) condition.

1. Block Diagram

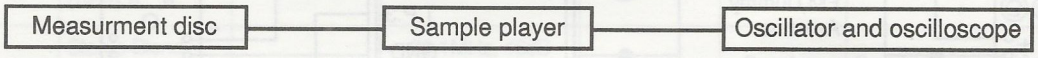

2. Measurement Method using an Oscilloscope

(a). Connect OSC output to rsistor for gain measurement (100 ohm). (Connect a servo driver side to positive side.)
(b). Connect CH1 of oscilloscope to a servo driver side of resistor for gain measurement (100 ohm). (Connect negative side with GND of set.)
(c). Connect CH2 of oscilloscope to TC9296F (IC1101) side of resistor for gain measurement (100 ohm).
(d). Play back the eighth track of A-BEX TCD-782 disc for measurement. (No sound recording track)
(e). Output frequency (1 kHz, 50 mVP-P) from OSC and compare the amplitude of CH1 and CH2 of oscilloscope and convert into dB.
Gain (dB) =20 Log (CH2/CH1)
Specification : Gain Normal if it is within 0±3dB.
* If the specificaiton is out (NG), TC9296F (IC1101) (Digital Servo LSI) is malfunction.
NOTE: AC voltmeter is available to measurement.

3. Connection (Example)

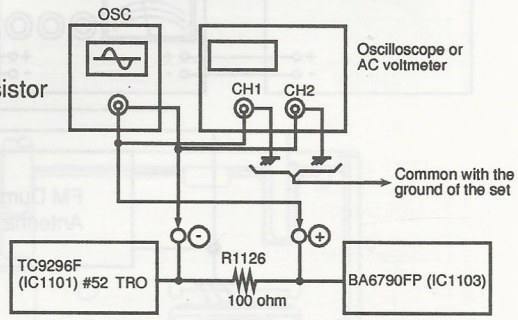

* TRO: Tracking drive output

Adjustment Procedures

1. FM SECTION

(1) Dummy Antenna Circuit

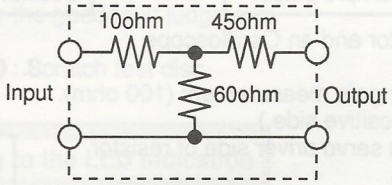

For 50 ohm FM Signal Generator Figure 1

(2) Connections

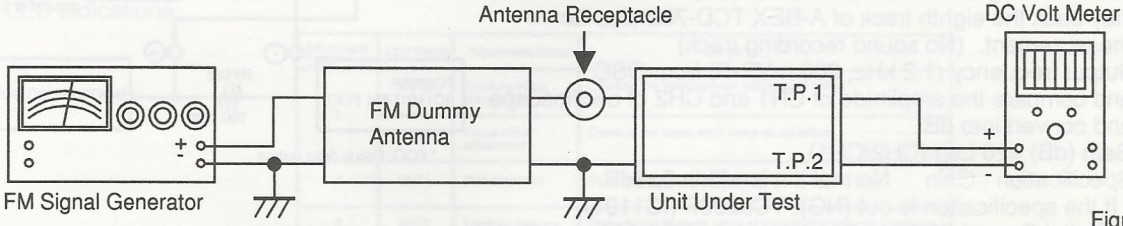

Figure 2

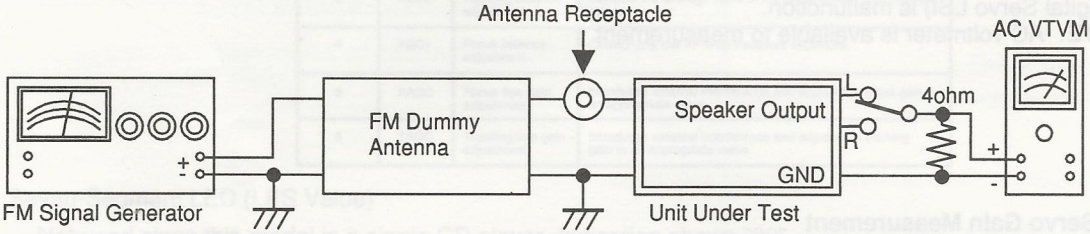

Figure 3

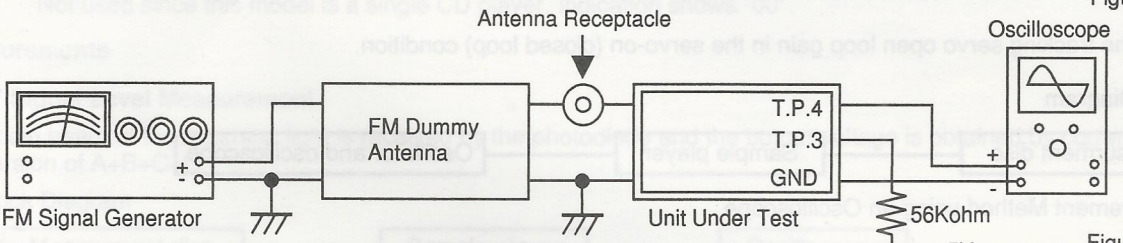

Figure 4

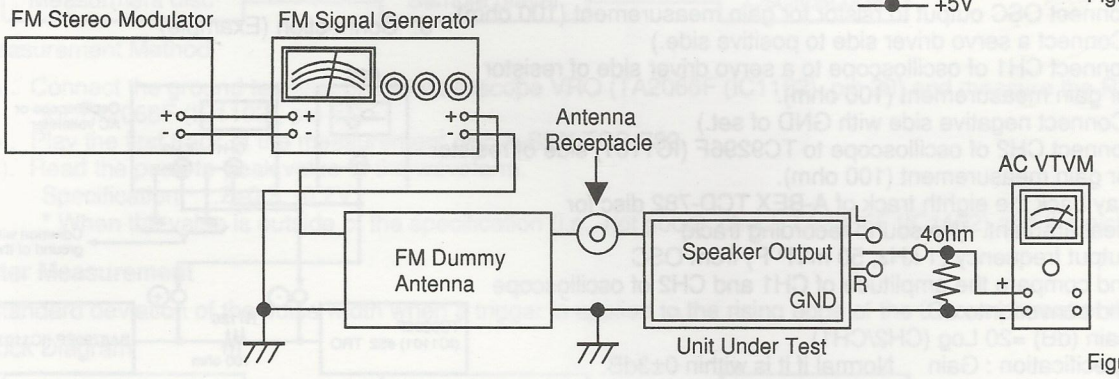

Figure 5

(3) Control Settings

Power Switch	ON	Bass Control	Center Position
Fader Control	Center Position	Band Switch	FM
Balance Control	Center Position	Others	OFF
Treble Control	Center Position		

(4) Adjustment Procedures

Step	Description		Connection	Signal Generator	Dial Control	Test Point	Adjustment
1	IF Adjustment		Figure 2	98.1MHz, 72dB (Mod. OFF)	98.1MHz	T.P.1 T.P.2	Adjust L2005 to 0±15mV.
2	Noise Level Adjustment	(1)	Figure 3	98.1MHz, 72dB (Mod. 400Hz, Dev. 75kHz)	98.1MHz	Speaker Output	Adjust MAIN VOLUME (S404/410) to obtain 2V output. This value is 0dB.
		(2)	Figure 3	98.1MHz, -20dB (Mod. 400Hz, Dev. 75kHz)	98.1MHz	Speaker Output	Adjust VR2002 to 30±5dB output at SG level minimum.
3	Seek Stop Adjustment		Figure 4	98.1MHz, 27dB (Mod. 400Hz, Dev. 75kHz)	98.1MHz	T.P.4	Adjust VR2003 for the waveform changing to maximum output. Figure : Waveform of T.P.4 output. 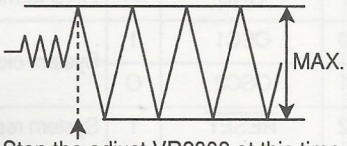 Stop the adjust VR2003 at this time.
4	Stereo Separation Adjustment (Lch)		Figure 5	98.1MHz, 72dB (Stereo, 1kHz, Lch only)	98.1MHz	Speaker Output	Adjust VR2005 for Rch output to be minimum and confirm Lch and Rch output level difference is more than 25dB.
5	Stereo Blend Adjustment (Lch)		Figure 5	98.1MHz, 46dB (Stereo, 1kHz, Lch only)	98.1MHz	Speaker Output	Adjust VR2004 for Lch and Rch output level difference to be 10±3dB.
6	Stereo Separation Adjustment (Rch)		Figure 5	98.1MHz, 72dB (Stereo, 1kHz, Rch only)	98.1MHz	Speaker Output	Proceed same adjustment under step 4 by alternating Lch and Rch.
7	Stereo Blend Adjustment (Rch)		Figure 5	98.1MHz, 46dB (Stereo, 1kHz, Rch only)	98.1MHz	Speaker Output	Proceed same adjustment under step 5.

Adjustment Locations

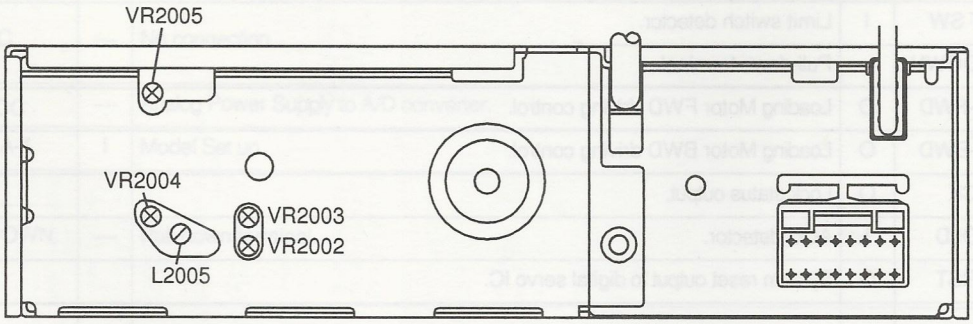

(Rear Side View)

NOTE : For the Adjustment parts (S404, 410) and Test Points (T.P.1 ~T.P.4), refer to the Parts Layout on P.C.Boards and Wiring Diagram.

Description of IC Terminal

75524W01 : IC601

No.	Symbol	I/O	Terminal Description
1	NOSE	I	Front Panel detector.
2	KEY-3	I	Key data input.
3	KEY-2		
4	KEY-1		
5	GND	—	GND terminal.
6	GND	—	Short GND.
7	X2	O	Sub clock connection (32.763kHz).
8	X1	I	
9	GND	—	GND terminal.
10	OSC1	I	System clock connection (7.15909MHz).
11	OSC2	O	
12	$\overline{\text{RESET}}$	I	System reset input.
13	GND	—	Short GND.
14	LCD-CLK	O	Clock data output to LCD Driver.
15	LCD-CE	O	CE data output to LCD Driver.
16	LCD-DATA	O	Serial data output to LCD Driver.
17	$\overline{\text{LCD-INH}}$	O	INH data output to LCD Driver.
18	LCD-ON	O	Power control for LCD back light.
19	NC	—	No connection.
20	PULL-DOWN	—	Pull-down terminal.
21	B-HOLD	I	Battery detector.
22	A-HOLD	I	ACC detector.
23	L-CONT	O	Power control for DISC detector.
24	SW-1	I	DISC loading detector (1).
25	SW-2	I	DISC loading detector (2).
26	SW-3	I	EJECT END detector.
27	SW-4	I	DISC chucking position detector.
28	B-DET	I	Digital servo IC voltage detector.
29	LIMIT SW	I	Limit switch detector.
30	PULL-DOWN	—	Pull-down terminal.
31	LOAD-FWD	O	Loading Motor FWD driving control.
32	LOAD-BWD	O	Loading Motor BWD driving control.
33	LOCK	O	Lock status output.
34	A-HOLD	I	ACC detector.
35	LSI-RST	O	System reset output to digital servo IC.
36 ~ 38	PULL-DOWN	—	Pull-down terminal.
39	BUS0	I/O	Command data input/output to CD Signal Processor.

No.	Symbol	I/O	Terminal Description
40	BUS1	I/O	Command data input/output to CD Signal Processor.
41	BUS2		
42	BUS3		
43	CCE	O	CE data output to CD Signal Processor.
44	BUCK	O	Clock data output to CD Signal Processor.
45	PULL-DOWN	—	Pull-down terminal.
46	V-CONT	O	Power control to CD Section.
47	PLL-D-I	I	Serial data input from PLL.
48	PLL-D-O	O	Serial data output to PLL.
49	PLL-CLK	O	Clock data output to PLL.
50	PLL-CE	O	CE data output to PLL.
51	SD/$\overline{ST}$	I	Station detector/Stereo signal input.
52	NFP ON-2	O	Fader output control at NFP.
53	NFP ON-1		
54	A-MUTE	O	Audio mute output.
55	VOL-CLK	O	Clock data output to Electric Volume.
56	VOL-DATA	O	Data output to Electric Volume.
57	PWR-ON	O	Power-on control.
58	PULL-UP	—	Pull-up terminal.
59	OUT-REM	O	OUT-Remote output.
60	P-ANT	O	Power Antenna control output.
61	PWR-IC	O	Power-IC standby control.
62	PULL-DOWN	—	Pull-down terminal.
63	V_{CC}	—	Power Supply terminal.
64	INTLZ	I	Initialize action delection input.
65	AREA-1	I	Model Set up.
66	AREA-2		
67	AREA-3		
68	NC	—	No connection.
69	PULL-DOWN	—	Pull-down terminal.
70	NC	—	No connection.
71			
72	AV_{CC}	—	Analog Power Supply to A/D converter.
73	AREA-4	I	Model Set up.
74	PULL-DOWN	—	Pull-down terminal.
~			
76			
77	GND	—	Short GND.
78			
79	S-METER	I	Signal meter input.
80	T-SENS	I	Temperature sensor input.

Block Diagram

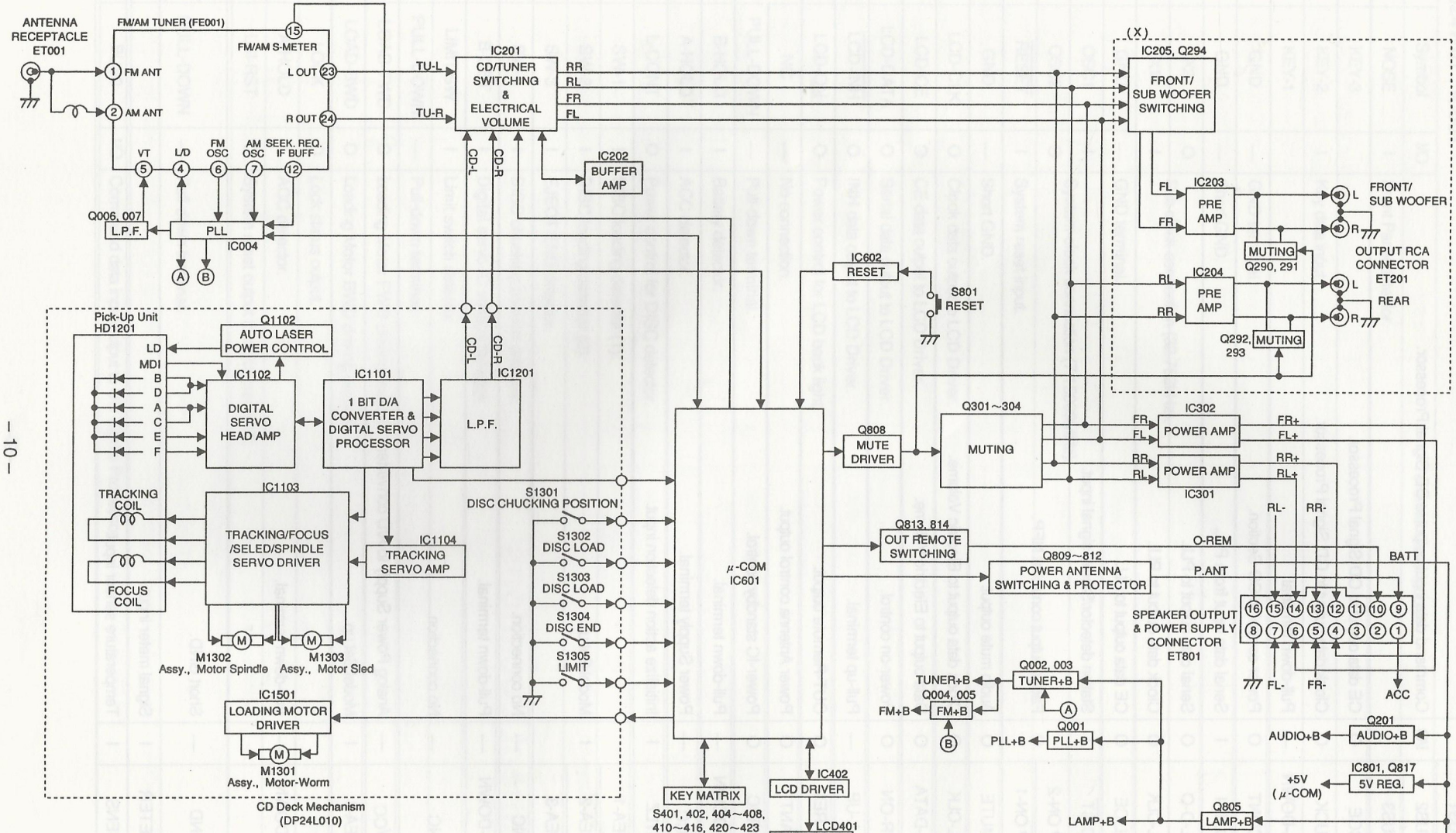

NOTE : ✕ : For CDE-7821 Model Only,
□ : For CDE-7820S Model Only,
Others : Common.

Parts Layout on P.C. Boards and Wiring Diagram (1/4)

Main P.C.Board (Component Side View)

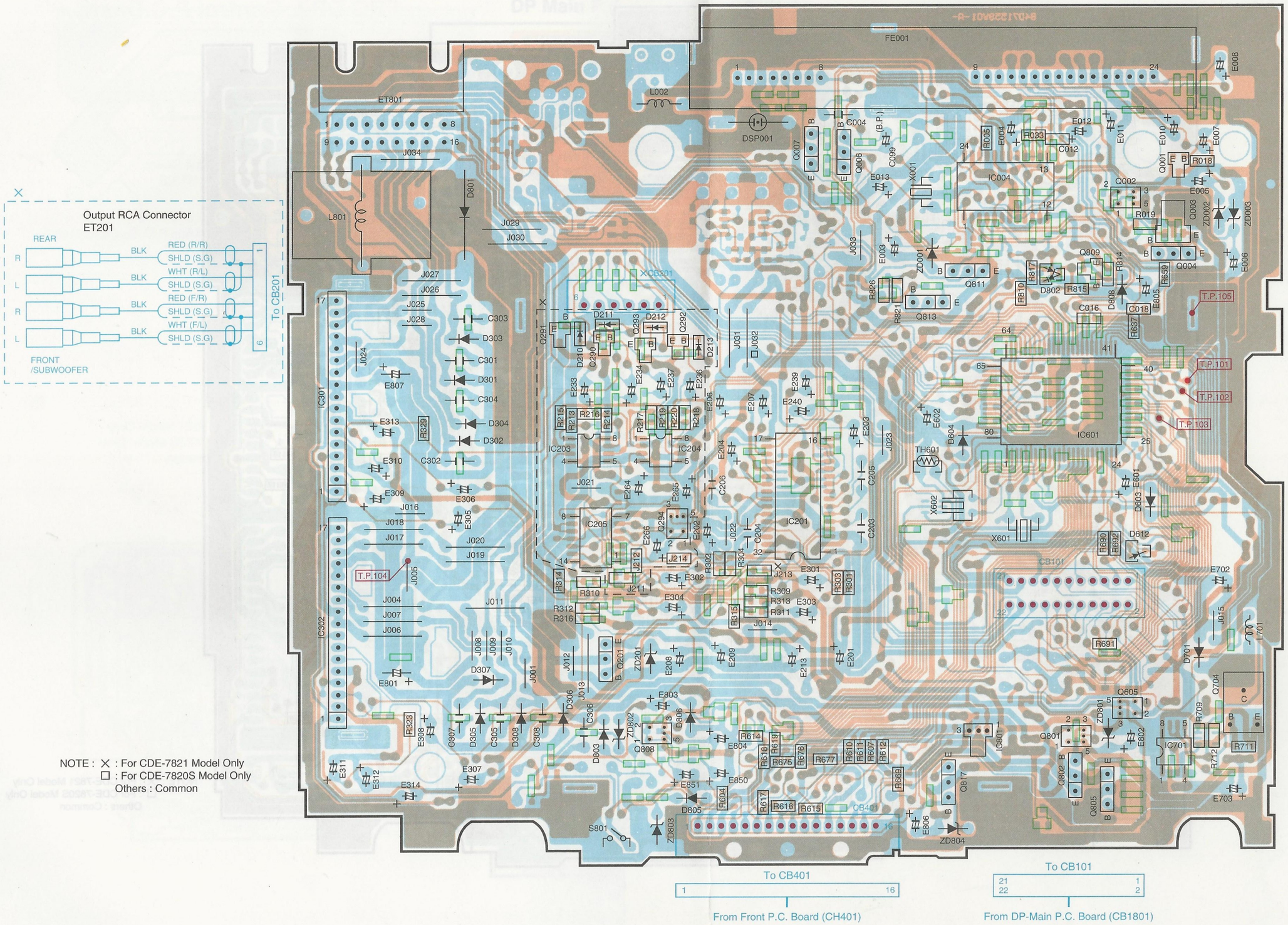

NOTE : X : For CDE-7821 Model Only
□ : For CDE-7820S Model Only
Others : Common

Orange Color Pattern : Component Side Pattern
Blue Color Pattern : Foil Side Pattern

Parts Layout on P.C. Boards and Wiring Diagram (2/4)

1

2

3

4

5

Main P.C.Board (Foil Side View)

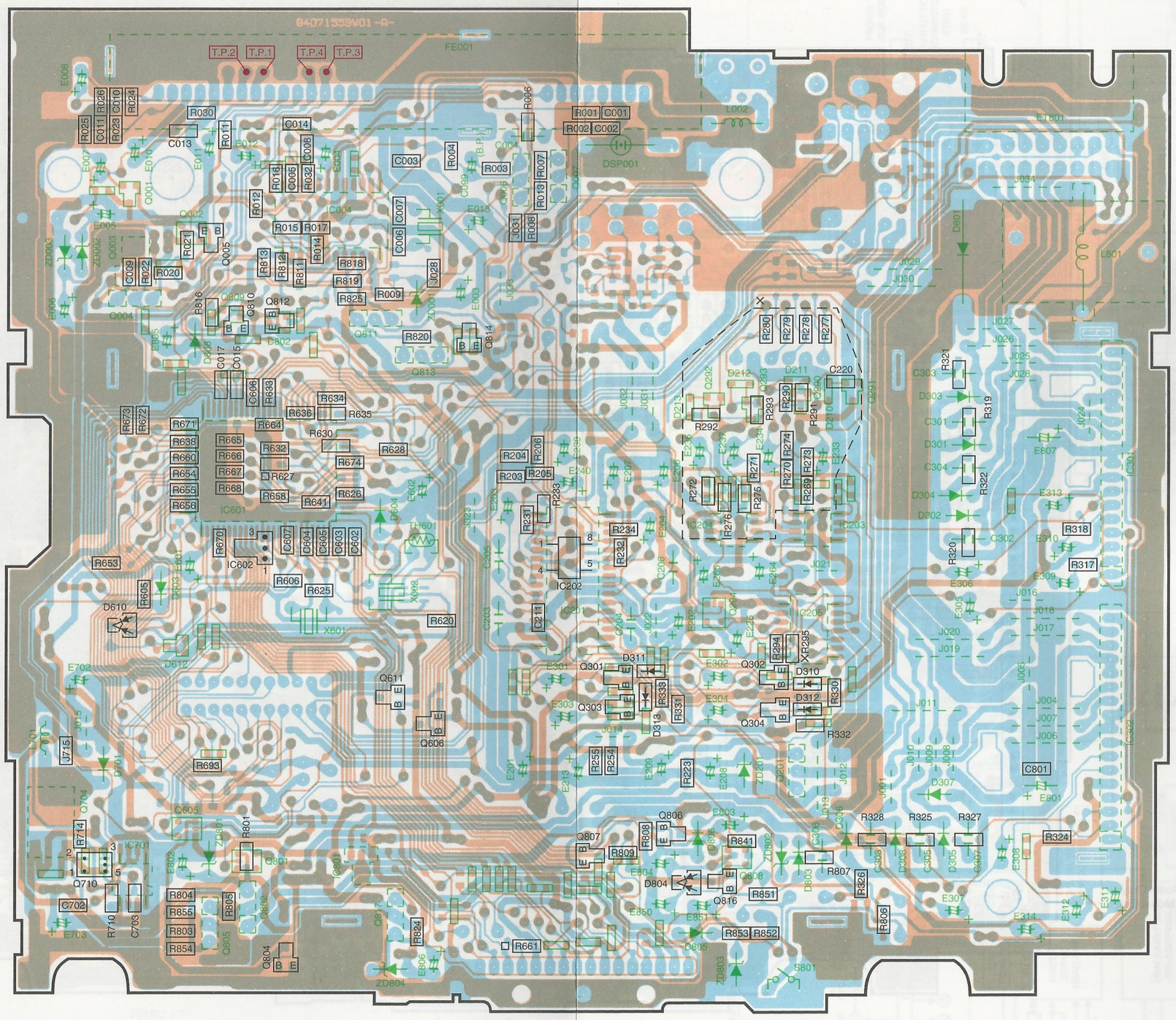

NOTE : ✕ : For CDE-7821 Model Only
□ : For CDE-7820S Model Only
Others : Common

Orange Color Pattern : Component Side Pattern
Blue Color Pattern : Foil Side Pattern

A B C D E F G

Parts Layout on P.C. Boards and Wiring Diagram (3/4)

All P.C. Boards viewed from soldered side.

Switch / Motor P.C.Board

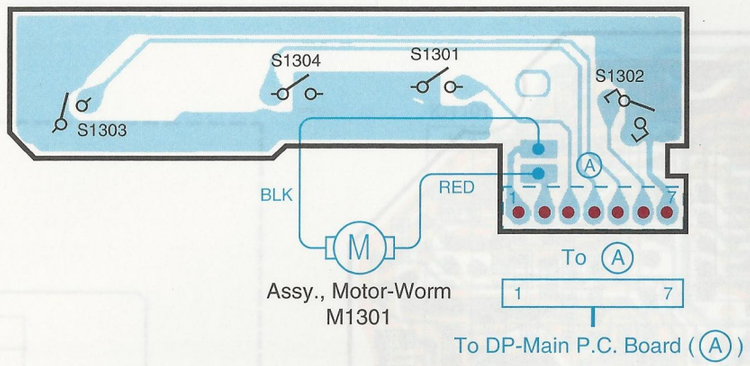

FPC DP-L Control P.C.Board

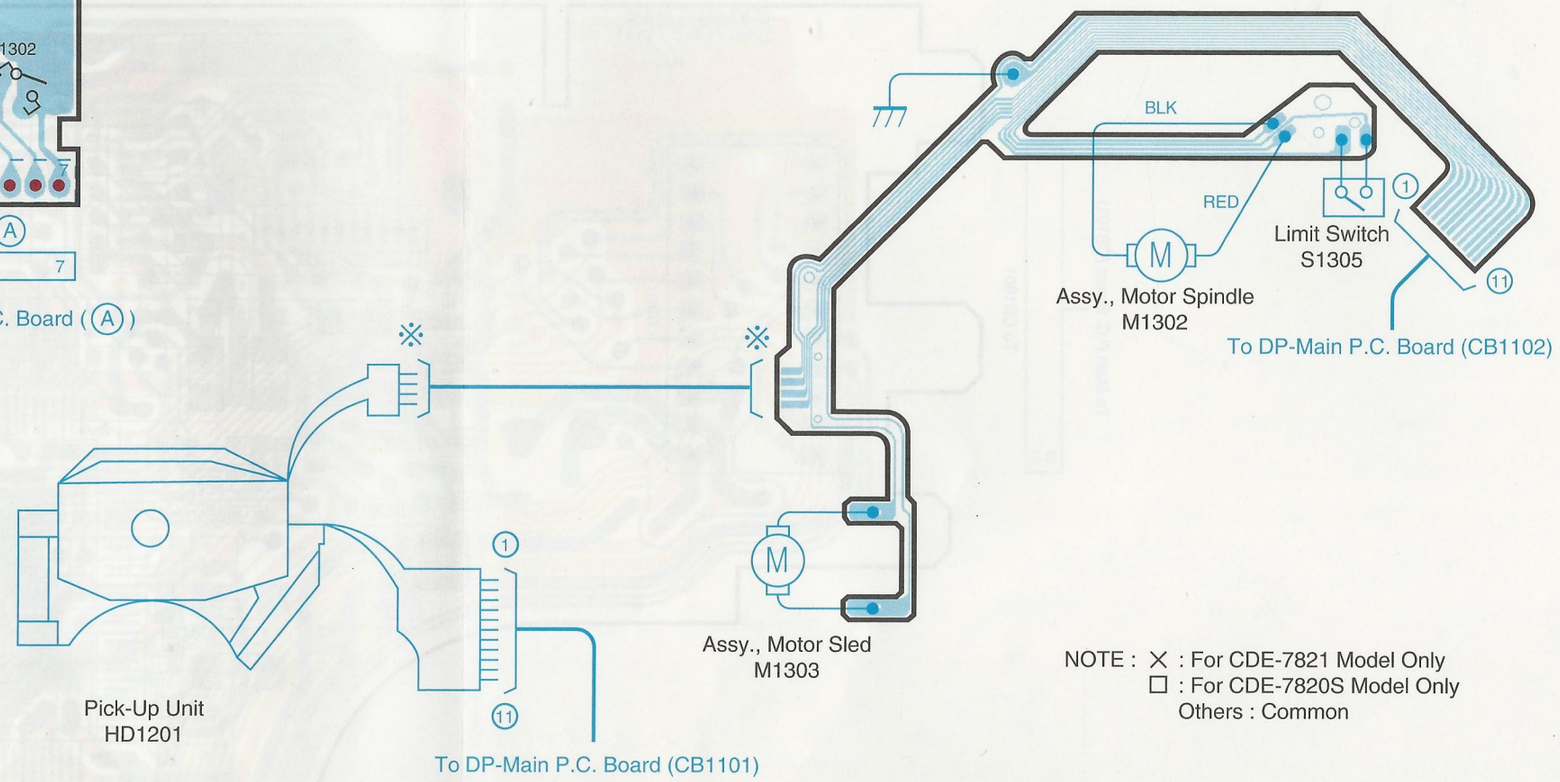

NOTE : ✕ : For CDE-7821 Model Only
□ : For CDE-7820S Model Only
Others : Common

Front P.C.Board

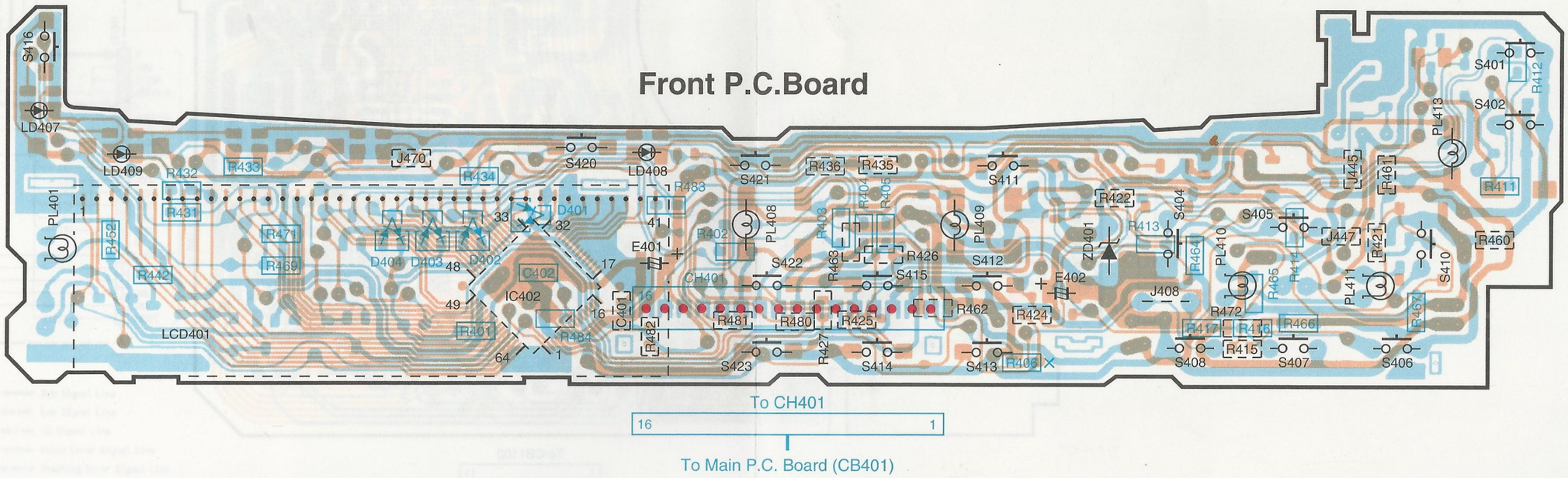

To CH401
16 — 1
To Main P.C. Board (CB401)

Orange Color Pattern : Component Side Pattern
Blue Color Pattern : Foil Side Pattern

Parts Layout on P.C. Boards and Wiring Diagram (4/4)

All P.C. Boards viewed from soldered side.

DP Main P.C.Board

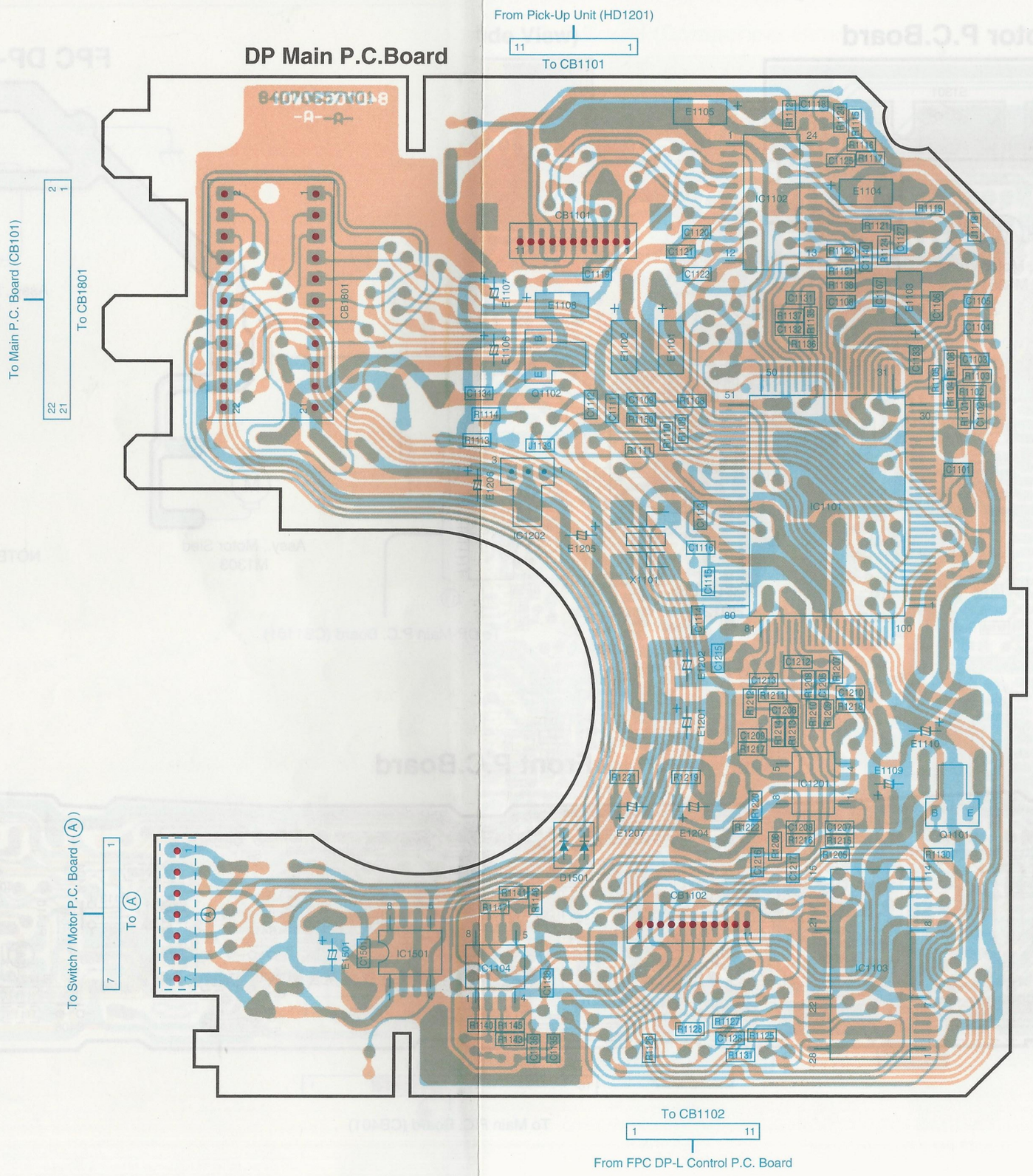

Orange Color Pattern : Component Side Pattern
Blue Color Pattern : Foil Side Pattern

Schematic Diagram (1/3)

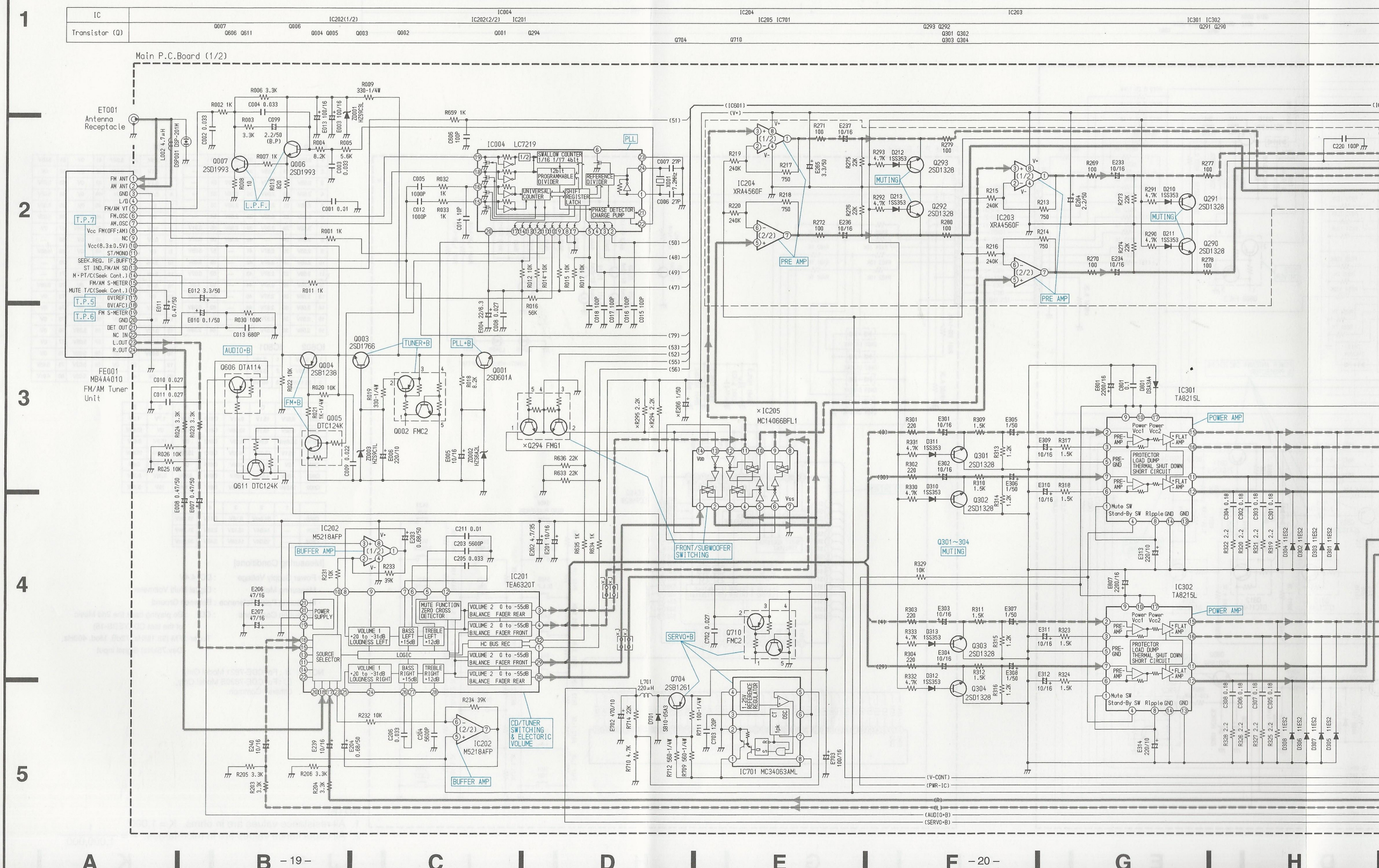

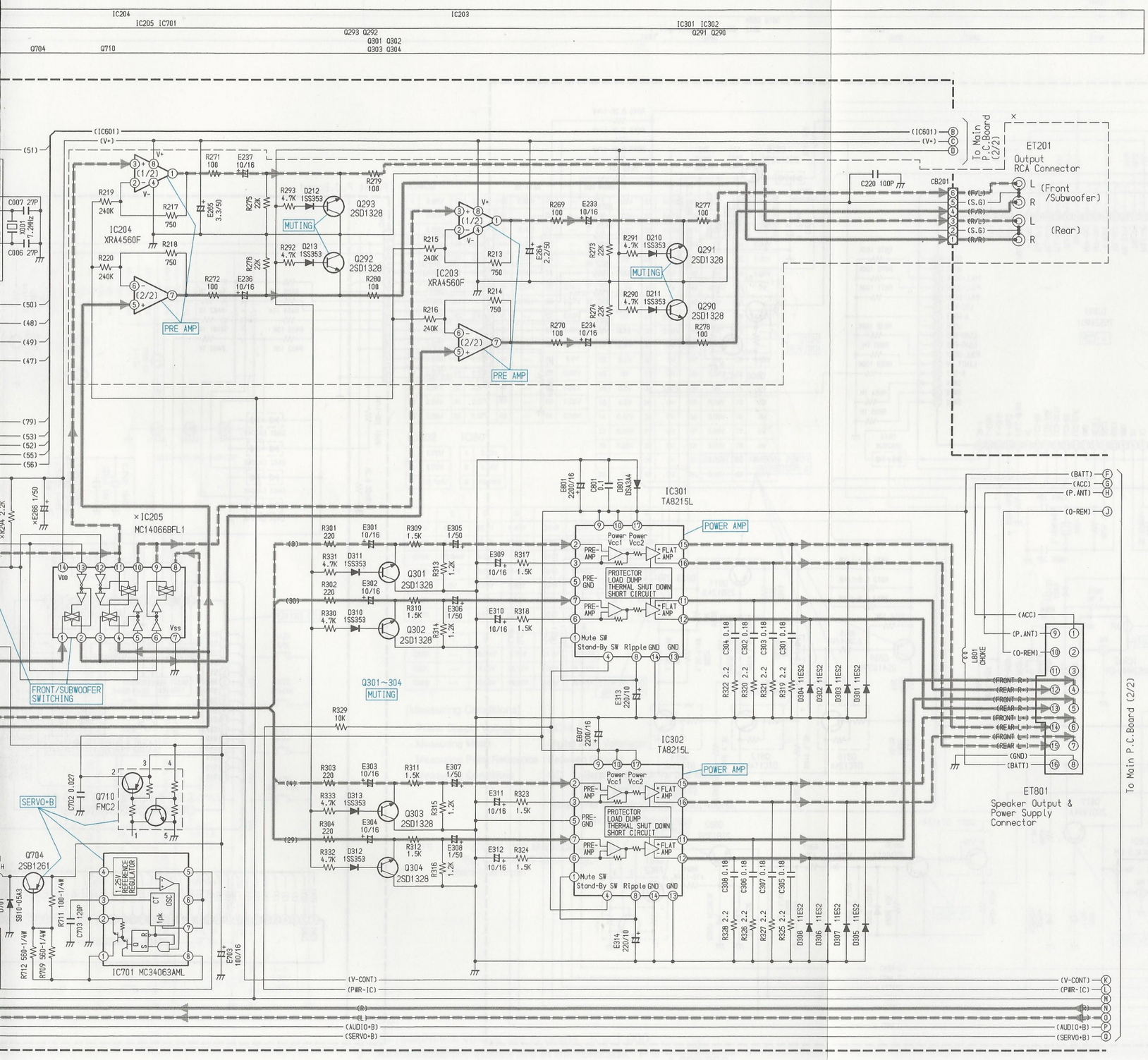

IC004

1	2.18V	13	3.62V
2	44.3mV	14	4.88V
3	44.5mV	15	41.9mV
4	44.9mV	16	49.4mV
5	4.9V	17	—
6	—	18	67.7mV
7	39.5mV	19	2.56V
8	39.5mV	20	4.93V
9	3.61V	21	—
10	44.7mV	22	1.25V
11	44.8mV	23	40.9mV
12	86.7mV	24	2.5V

IC201

1	5.12V	17	4.39V
2	40.4mV	18	4.39V
3	4.38V	19	8.62V
4	4.38V	20	4.39V
5	4.38V	21	4.4V
6	4.39V	22	—
7	4.39V	23	4.41V
8	4.33V	24	—
9	—	25	4.35V
10	4.4V	26	4.4V
11	—	27	4.41V
12	8.63V	28	4.4V
13	4.38V	29	4.41V
14	—	30	4.41V
15	4.39V	31	8.72V
16	4.39V	32	5.17V

IC202

1	4.24V
2	4.36V
3	4.38V
4	47mV
5	4.37V
6	4.37V
7	4.24V
8	8.68V

(×) IC203

1	4.69V
2	4.4V
3	4.4V
4	61.1mV
5	4.4V
6	4.41V
7	4.41V
8	8.69V

(×) IC204

1	4.41V
2	4.41V
3	4.41V
4	62.4mV
5	4.41V
6	4.41V
7	4.41V
8	8.72V

(×) IC205

1	4.41V	8	4.4V
2	4.4V	9	4.41V
3	4.4V	10	4.41V
4	4.4V	11	4.41V
5	64.9mV	12	65.1mV
6	8.71V	13	8.71V
7	35.2mV	14	8.71V

IC701

1	15.89V
2	26mV
3	0.77V
4	26mV
5	1.28V
6	15.89V
7	15.89V
8	15.91V

IC301

1	5.88V	10	14.1V
2	5.87V	11	6.84V
3	5.84V	12	6.89V
4	3.39V	13	36.8mV
5	42.9mV	14	36.8mV
6	5.87V	15	6.83V
7	5.86V	16	6.88V
8	5.88V	17	14.07V
9	14.1V		

IC302

1	5.79V	10	14.1V
2	5.77V	11	6.75V
3	5.8V	12	6.8V
4	3.39V	13	36.2mV
5	46.8mV	14	36.2mV
6	5.8V	15	6.74V
7	5.77V	16	6.8V
8	5.82V	17	14.1V
9	14.1V		

		E	C	B
	Q001	4.91V	13.86V	5.51V
	Q003	8.91V	13.87V	9.48V
	Q004	8.92V	8.89V	8.2V
	Q005	36.6mV	0.1V	3.62V
	Q006	0.65V	9.83V	1.24V
	Q007	50mV	4.06V	0.65V
(×)	Q290	32.3mV	32.1mV	0.74V
(×)	Q291	32.4mV	32mV	0.74V
(×)	Q292	32.5mV	32.1mV	0.74V
(×)	Q293	32.4mV	32.1mV	0.73V
	Q301	47.9mV	46.5mV	0.75V
	Q302	50.5mV	50.3mV	0.75V
	Q303	50.6mV	50.5mV	0.74V
	Q304	48.9mV	48.8mV	0.75V
	Q606	8.7V	0.1V	8.7V
	Q611	0V	8.7V	0V
	Q704	14.88V	7.14V	14.5V

		1	2	3	4	5
	Q002	—	13.77V	13.85V	3.61V	28mV
(×)	Q294	63.2mV	8.73V	31.5mV	31.5mV	5.07V
	Q710	—	15.9V	15.93V	5.05V	0.01V

[Measuring Conditions]

- Power Supply Voltage : DC14.4V
- Measuring Meter : Digital Multi Voltmeter
- Measuring Point Reference : Between Ground
- Measuring Conditions : CD : Be playing back the 2nd Music of the test CD (YEDS-18)
  Tuner : FM (98.1MHz, 72dB, Mod. 400Hz, Dev.75kHz) Signal input

NOTE : × : For CDE-7821 Model Only,
□ : For CDE-7820S Model Only,
Others : Common.

NOTE:

1. All resistance values are in ohms. K = 1,000
2. All capacitance values are in microfarads. $P = \frac{1}{1{,}000{,}000}$

CDE-7821/
CDE-7820S

CDE-7821/
CDE-7820S

Schematic Diagram (2/3)

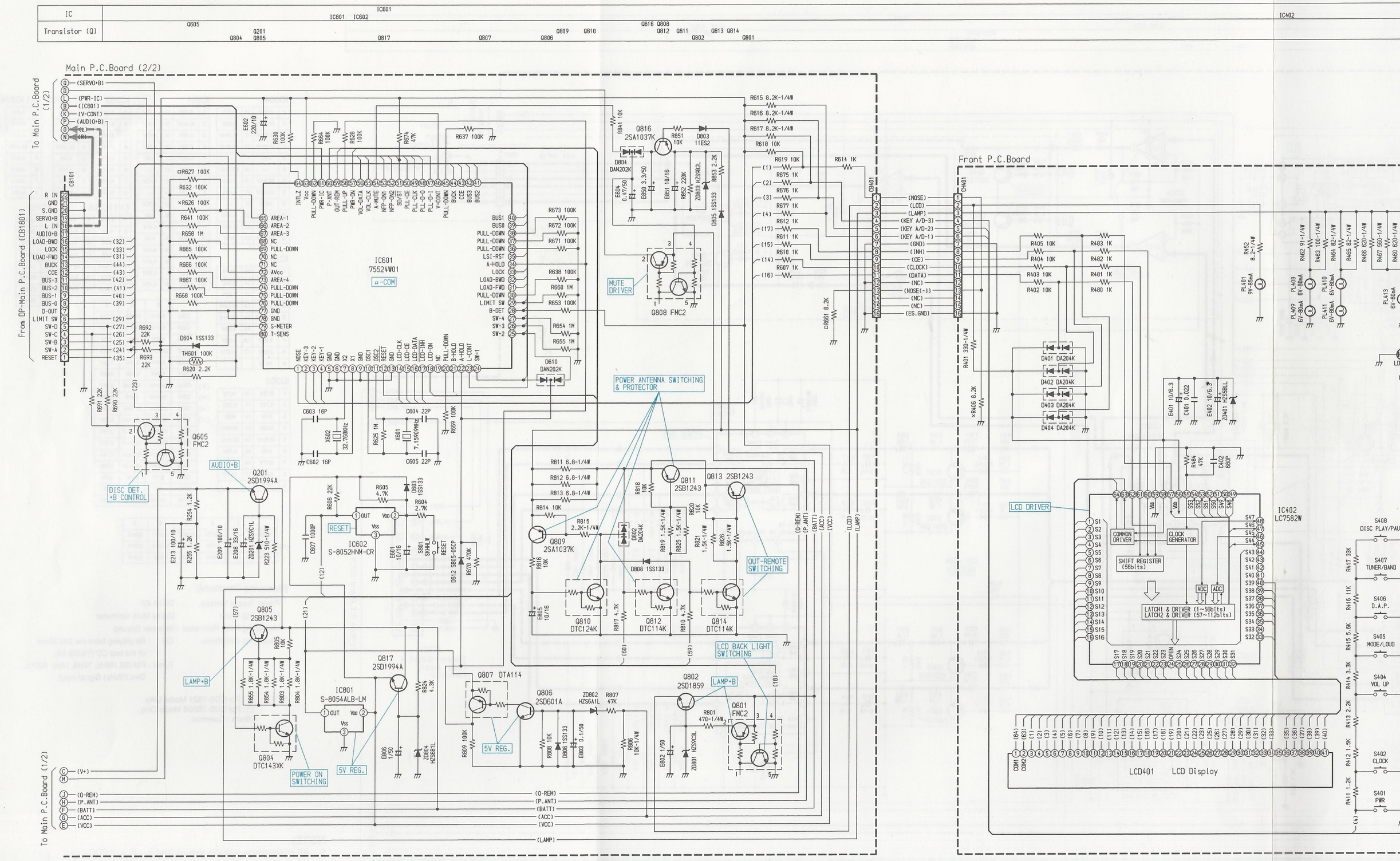

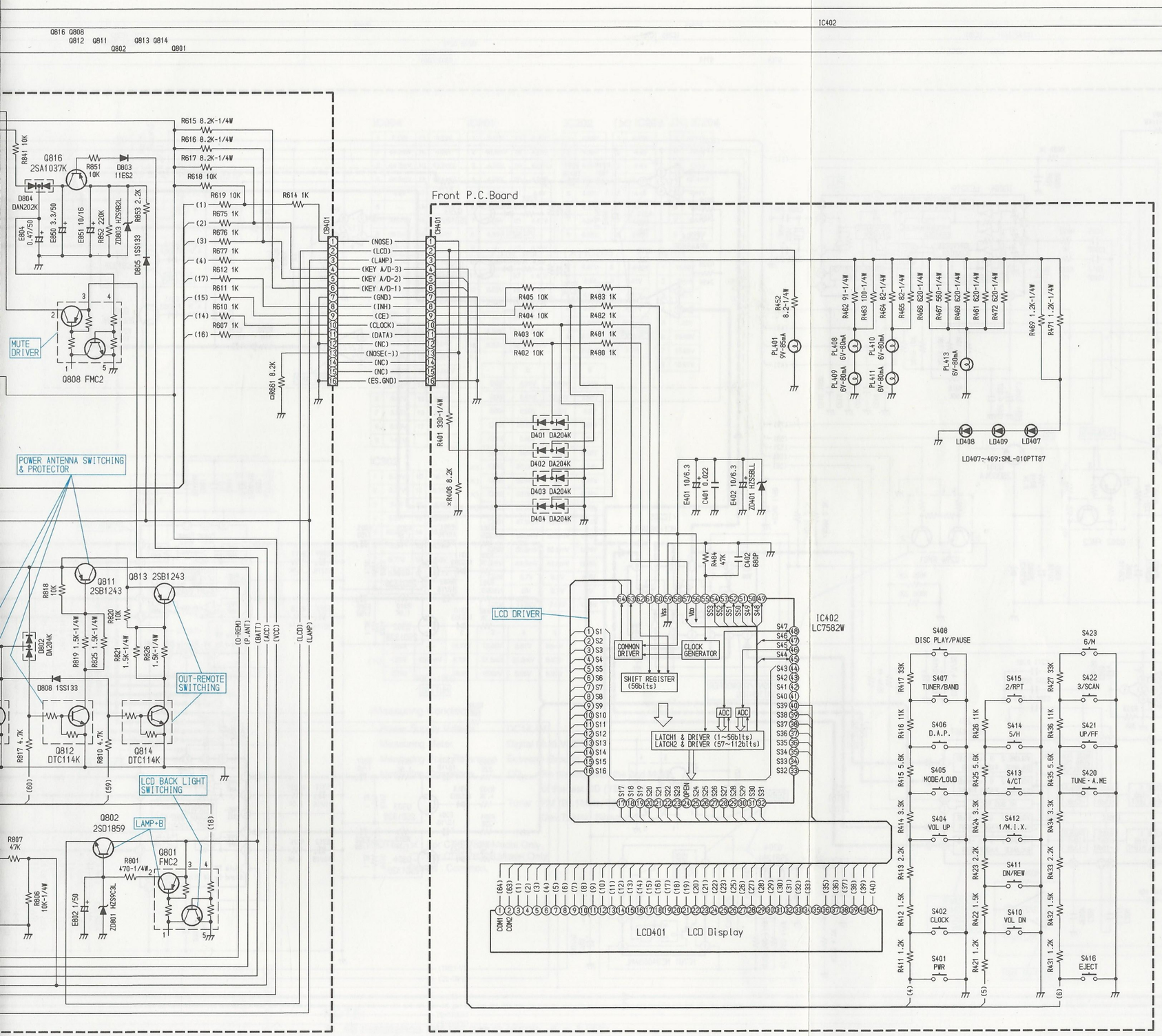

IC402

1	2.55V	17	2.57V	33	2.56V	49	—
2	2.55V	18	2.56V	34	—	50	—
3	2.55V	19	2.57V	35	2.56V	51	—
4	2.56V	20	2.56V	36	2.56V	52	—
5	2.55V	21	2.57V	37	2.56V	53	—
6	2.55V	22	2.56V	38	2.56V	54	—
7	2.56V	23	2.56V	39	2.56V	55	3.91V
8	2.55V	24	—	40	2.56V	56	5.07V
9	2.55V	25	2.57V	41	—	57	5.05V
10	2.55V	26	2.57V	42	—	58	5.05V
11	2.56V	27	2.57V	43	—	59	0.07V
12	2.55V	28	2.57V	44	—	60	4.8V
13	2.56V	29	2.57V	45	—	61	0.55V
14	2.56V	30	2.57V	46	—	62	0.53V
15	2.56V	31	2.57V	47	—	63	2.58V
16	2.56V	32	2.57V	48	—	64	2.58V

IC601

1	2.5V	21	5.04V	41	0V	61	5.05V
2	5.1V	22	5.07V	42	0V	62	0V
3	5.1V	23	5.04V	43	0V	63	5.07V
4	5.1V	24	0V	44	0V	64	5.02V
5	0V	25	0V	45	0V.	65	5.03V
6	0V	26	0V	46	0V	66	5.03V
7	1.5V	27	0V	47	4.84V	67	0V
8	0.8V	28	0V	48	0V	68	—
9	0V	29	0.02V	49	0V	69	4.68V
10	2.4V	30	0.02V	50	0V	70	—
11	2.4V	31	0V	51	5.05V	71	—
12	5.1V	32	0V	52	0V	72	5.08V
13	0V	33	0V	53	5.04V	73	0V
14	0.5V	34	5.07V	54	0V	74	0V
15	4.5V	35	0V	55	5.04V	75	0V
16	0.42V	36	0V	56	5.05V	76	0V
17	5.05V	37	0V	57	5.05V	77	0V
18	5.03V	38	0V	58	5.02V	78	0V
19	—	39	0V	59	5.03V	79	5.45V
20	0V	40	0V	60	5.03V	80	4.91V

IC602

1	5.25V
2	5.26V
3	35.1mV

IC801

1	5.19V
2	5.24V
3	46.1mV

	E	C	B		E	C	B
Q201	8.82V	15.1V	9.41V	Q810	0.1V	1.7V	1.2V
Q802	9.92V	15.1V	10.58V	Q811	15.86V	0V	15.84V
Q804	35.8mV	4.9V	5.13V	Q812	0V	15.9V	0.67V
Q805	15.1V	15.05V	14.42V	Q813	15.86V	0.09V	15.84V
Q806	0V	0.01V	0.62V	Q814	0V	15.9V	0.6V
Q807	4.84V	4.84V	0.01V	Q816	8.93V	3.38V	8.37V
Q809	15.59V	0.47V	15.13V	Q817	5.19V	16V	5.78V

	1	2	3	4	5
Q605	—	58.3mV	5.16V	0.11V	39.1mV
Q801	—	14.84V	15.12V	2.05V	31.7mV
Q808	—	15.08V	14.96V	3.43V	39.8mV

[Measuring Conditions]

- Power Supply Voltage : DC14.4V
- Measuring Meter : Digital Multi Voltmeter
- Measuring Point Reference : Between Ground
- Measuring Conditions : CD : Be playing back the 2nd Music of the test CD (YEDS-18)
  Tuner : FM (98.1MHz, 72dB, Mod. 400Hz, Dev.75kHz) Signal input

NOTE : × : For CDE-7821 Model Only,
□ : For CDE-7820S Model Only,
Others : Common.

NOTE:

1. All resistance values are in ohms. K = 1,000
2. All capacitance values are in microfarads. $P = \frac{1}{1,000,000}$

Schematic Diagram (3/3)

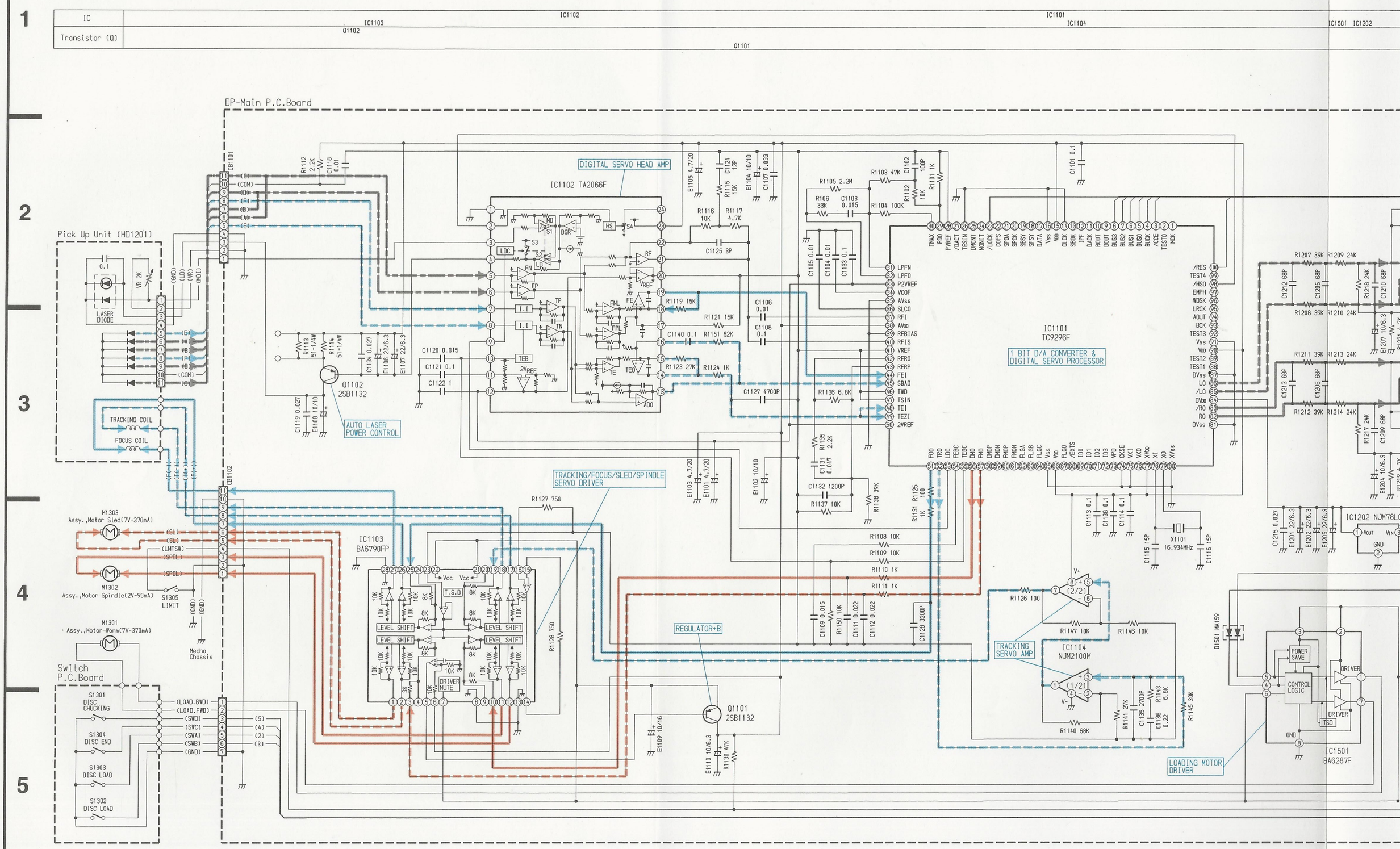

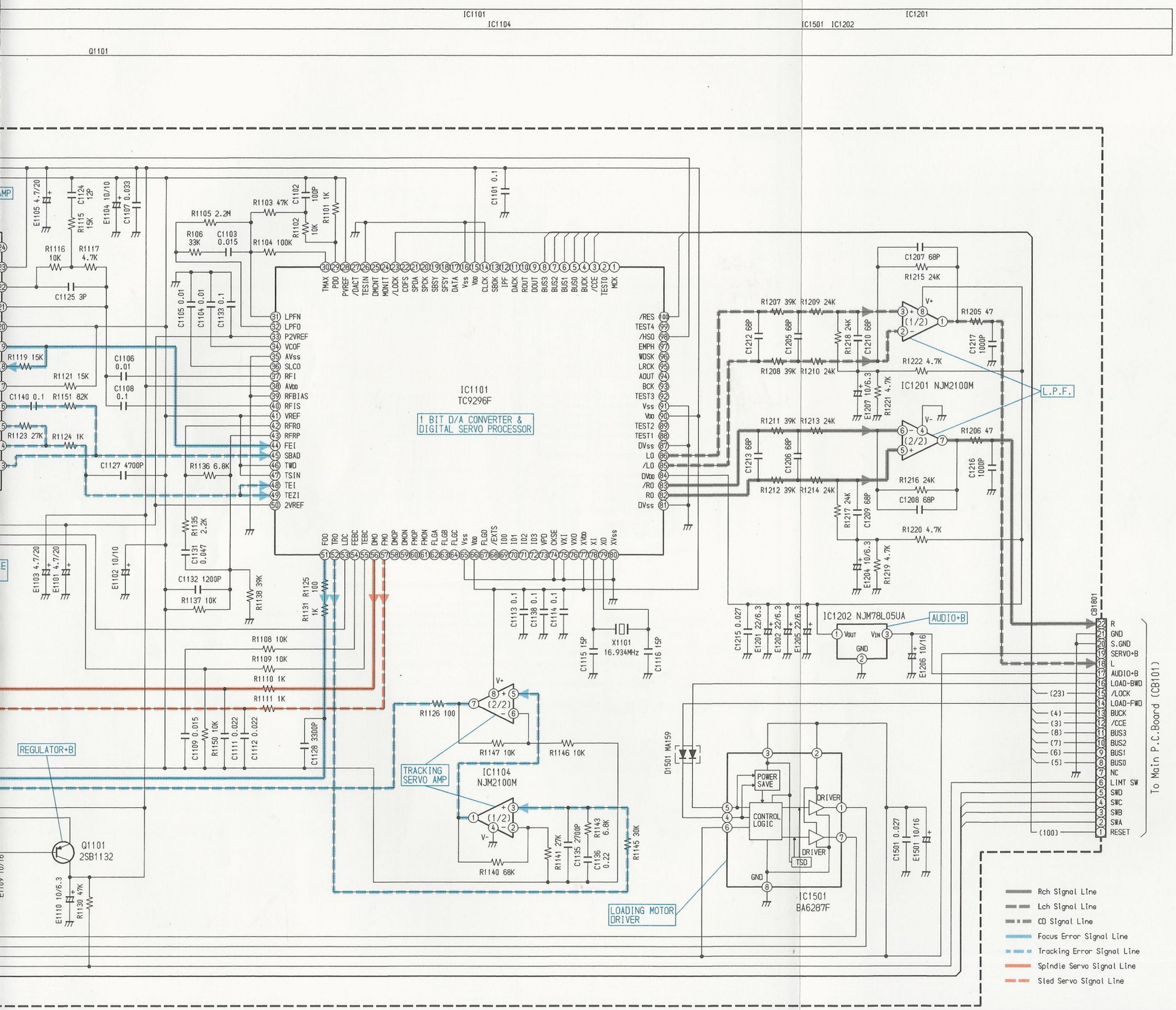

IC1101

1	NC	33	4.3V	52	2.2V	83	2.5V
2	NC	34	1.2V	53	5V	84	5V
3-8	PS	35	0V	54-57	PS	85	2.5V
9-13	NC	36	2.2V	58-64	NC	86	2.5V
14	0V	37	0V	65	0V	87	0V
15	5V	38	5V	66	5V	88	NC
16	0V	39	0V	67-73	NC	89	NC
17-22	NC	40	PS	74	0V	90	5V
23	0V	41	2.2V	75	0V	91	0V
24	NC	42	3.6V	76	NC	92-97	NC
25	NC	43	2.8V	77	5V	98	5V
26	0V	44	2.2V	78	PS	99	NC
27	NC	45	0V	79	PS	100	5V
28	2.1V	46-49	2.2V	80	0V		
29	PS	50	4.3V	81	0V		
30-32	2.1V	51	2.1V	82	2.5V		

IC1102

1	0V	13	2.7V
2	5V	14	2.2V
3	0.2V	15	2.2V
4	3.3V	16	2.2V
5	2.2V	17	2.4V
6	2.2V	18	2.4V
7	2V	19	2.3V
8	2V	20	2.2V
9	5V	21	PS
10	2.2V	22	2.2V
11	2.2V	23	5V
12	4.3V	24	NC

IC1103

1	3.8V	15	2.2V
2	3.6V	16	2.2V
3	2.2V	17	3.5V
4	NC	18	2.2V
5	6.4V	19	2.2V
6	5V	20	NC
7	7.1V	21	7.1V
8	0V	22	7.1V
9	NC	23	2.2V
10	2.6V	24	NC
11	4.5V	25	2.1V
12	2.7V	26	3.4V
13	0V	27	3.8V
14	2.2V	28	0V

IC1104

1	2.2V
2	2.2V
3	2.2V
4	0V
5	2.2V
6	2.2V
7	2.2V
8	5V

IC1201

1	2.5V
2	2.5V
3	2.5V
4	0V
5	2.5V
6	2.5V
7	2.5V
8	5V

IC1202

1	5V
2	0V
3	8.8V

IC1501

1	0V
2	7.1V
3	7.1V
4	0V
5	0V
6	7.1V
7	0V
8	0V

	E	C	B
Q1101	7.1V	5V	6.4V
Q1102	3.9V	1.8V	3.2V

[Measuring Conditions]

- Power Supply Voltage : DC14.4V
- Measuring Meter : Digital Multi Voltmeter
- Measuring Point Reference : Between Ground
- Measuring Conditions : CD : Be playing back the 2nd Music of the test CD (YEDS-18)
  Tuner : FM (98.1MHz, 72dB, Mod. 400Hz, Dev.75kHz) Signal input

NOTE:

1. All resistance values are in ohms. K = 1,000
2. All capacitance values are in microfarads. $P = \frac{1}{1,000,000}$

Electrical Parts List

NOTE : For the parts not mentioned, refer to the Service Manual for CDE-7821 / CDE-7820 (Part No. 68E21970S01).

	Symbol No.	Part No.	Description
	Main P.C.Board		
	IC's		
	IC202	51T90149F03	M5218AFP
×	IC203	51T92001F21	XRA4560F
×	IC204	51T92001F21	XRA4560F
	IC601	51T75524W01	75524W01
	IC701	51T15510W01	MC34063AML
	Transistors		
	Q606	48T62966F02	CP., DTA114
	Q611	48T62967F03	CP., DTC124K
	Q710	48T73888F12	CP., FMC2
	Q804	48T62967F05	CP., DTC143XK
	Diodes		
×	D210	48T75404W01	CP., 1SS353
×	D211	48T75404W01	CP., 1SS353
×	D212	48T75404W01	CP., 1SS353
×	D213	48T75404W01	CP., 1SS353
	D310	48T75404W01	CP., 1SS353
	D311	48T75404W01	CP., 1SS353
	D312	48T75404W01	CP., 1SS353
	D313	48T75404W01	CP., 1SS353
	D610	48T63462F01	CP., DAN202K
	D612	48T15702W01	CP., SB05-05CP
	D701	48T85065W01	SB10-05A3
	Switch		
	S801	40T16096W03	Tact, SKHHLW (RESET)
	Capacitors		
	E003	23S16086W03	ELY., 100μF / 16V
	C004	08T90316F23	TF, 0.033μF
	E004	23T25149W16	ELY., 22μF / 6.3V
	E006	23S16086W01	ELY., 220μF / 10V
	C008	08S65128F79	CP., 0.027μF
	E010	23S75372W10	ELY., 0.1μF / 50V
	E013	23S16086W03	ELY., 100μF / 16V
	C099	23S82372F19	ELY., (B.P) 2.2μF / 50V
	E201	23S75372W04	ELY., 10μF / 16V
	E202	23S75372W09	ELY., 4.7μF / 35V
	C203	08T55390W14	PF., 5600pF
	E203	23S75372W14	ELY., 0.68μF / 50V
	C204	08T55390W14	PF., 5600pF
	E204	23S75372W14	ELY., 0.68μF / 50V
	C205	08T90316F23	TF, 0.033μF
	C206	08T90316F23	TF, 0.033μF
	E206	23S75372W07	ELY., 47μF / 16V
	E207	23S75372W07	ELY., 47μF / 16V
	E208	23S75372W06	ELY., 33μF / 16V
	E209	23S75372W02	ELY., 100μF / 10V
	E213	23S75372W02	ELY., 100μF / 10V
×	E233	23S75372W04	ELY., 10μF / 16V
×	E234	23S75372W04	ELY., 10μF / 16V
×	E236	23S75372W04	ELY., 10μF / 16V
×	E237	23S75372W04	ELY., 10μF / 16V
	E239	23S75372W04	ELY., 10μF / 16V
	E240	23S75372W04	ELY., 10μF / 16V
×	E264	23S75372W16	ELY., 2.2μF / 50V
×	E265	23S75372W17	ELY., 3.3μF / 50V
×	E266	23S75372W15	ELY., 1μF / 50V
	C301	08T35122W16	PF., 0.18μF
	E301	23S75372W04	ELY., 10μF / 16V
	C302	08T35122W16	PF., 0.18μF
	E302	23S75372W04	ELY., 10μF / 16V
	C303	08T35122W16	PF., 0.18μF
	E303	23S75372W04	ELY., 10μF / 16V
	C304	08T35122W16	PF., 0.18μF
	E304	23S75372W04	ELY., 10μF / 16V
	C305	08T35122W16	PF., 0.18μF
	E305	23S75372W15	ELY., 1μF / 50V
	C306	08T35122W16	PF., 0.18μF
	E306	23S75372W15	ELY., 1μF / 50V
	C307	08T35122W16	PF., 0.18μF
	E307	23S75372W15	ELY., 1μF / 50V
	C308	08T35122W16	PF., 0.18μF
	E308	23S75372W15	ELY., 1μF / 50V
	E602	23S16086W01	ELY., 220μF / 10V
	C702	08S65128F79	CP., 0.027μF
	C703	08S82122F39	CP., 120pF
	E703	23S16086W03	ELY., 100μF / 16V
	Resistors		(All resistors are chip 1/10W±5% unless otherwise noted.)
×	R213	06S64995F50	750 ohm
×	R214	06S64995F50	750 ohm
×	R215	06S64996F11	240K ohm
×	R216	06S64996F11	240K ohm

NOTE : ×: For CDE-7821 Model Only, □: For CDE-7820S Model Only, Others : Common.

	Symbol No.	Part No.	Description
×	R217	06S64995F50	750 ohm
×	R218	06S64995F50	750 ohm
×	R219	06S64996F11	240K ohm
×	R220	06S64996F11	240K ohm
	R254	06S64995F55	1.2K ohm
	R255	06S64995F55	1.2K ohm
	R604	06S64995F63	2.7K ohm
	R606	06S64995F85	22K ohm
□	R627	06S64996F02	100K ohm
	R637	06S64996F02	100K ohm
	R638	06S64996F02	100K ohm
	R653	06S64996F02	100K ohm
□	R660	06S64996F26	1M ohm
	R661	06S64995F75	8.2K ohm
	R670	06S64996F18	470K ohm
	R690	06S64995F85	22K ohm
	R691	06S64995F85	22K ohm
	R692	06S64995F85	22K ohm
	R693	06S64995F85	22K ohm
	R709	06S70072F47	560 ohm 1/4W
	R710	06T15443W69	4.7K ohm
	R711	06S70072F29	100 ohm 1/4W
	R712	06S70072F47	560 ohm 1/4W
	R714	06T15443W85	22K ohm
	R803	06S70072F59	1.8K ohm 1/4W
	R804	06S70072F59	1.8K ohm 1/4W
	R854	06S70072F59	1.8K ohm 1/4W
	R855	06S70072F59	1.8K ohm 1/4W

Front P.C.Board

Resistor

×	R406	06S64995F75	CP., 8.2K ohm 1/10W

DP-Main P.C.Board

IC's

	IC1101	51T75549W01	TC9296F
	IC1102	51T75548W01	TA2066F
	IC1103	51T65291W01	BA6790FP
	IC1104	51T16025W01	NJM2100M
	IC1201	51T16025W01	NJM2100M
	IC1202	51T11054W02	NJM78L05UA
	IC1501	51T65209W01	BA6287F

Transistors

	Q1101	48T80611F01	CP., 2SB1132
	Q1102	48T80611F01	CP., 2SB1132

Symbol No.	Part No.	Description

Diode

D1501	48T81063F01	CP., MA159

Crystal

X1101	91T45433W92	CP., 16.934MHz

Capacitors

C1101	08S35374W01	CP., 0.1μF
E1101	23S55311W42	CP. TAN., 4.7μF / 20V
C1102	08S45677W36	CP., 100pF
E1102	23S55311W23	CP. TAN., 10μF / 10V
C1103	08S65128F71	CP., 0.015μF
E1103	23S55311W42	CP. TAN., 4.7μF / 20V
C1104	08S65128F69	CP., 0.01μF
E1104	23S55311W23	CP. TAN., 10μF / 10V
C1105	08S65128F69	CP., 0.01μF
E1105	23S55311W42	CP. TAN., 4.7μF / 20V
C1106	08S65128F69	CP., 0.01μF
E1106	23T25191W42	CP. ELY., 22μF / 6.3V
C1107	08T15399W02	CP., 0.033μF
E1107	23T25191W42	CP. ELY., 22μF / 6.3V
C1108	08S35374W01	CP., 0.1μF
E1108	23S55311W23	CP. TAN., 10μF / 10V
C1109	08S65128F71	CP., 0.015μF
E1109	23T25191W41	CP. ELY., 10μF / 16V
E1110	23T25191W05	CP. ELY., 10μF / 6.3V
C1111	08T15399W01	CP., 0.022μF
C1112	08T15399W01	CP., 0.022μF
C1113	08S35374W01	CP., 0.1μF
C1114	08S35374W01	CP., 0.1μF
C1115	08S45677W16	CP., 15pF
C1116	08S45677W16	CP., 15pF
C1118	08S65128F69	CP., 0.01μF
C1119	08S65128F79	CP., 0.027μF
C1120	08S65128F71	CP., 0.015μF
C1121	08S35374W01	CP., 0.1μF
C1122	08T65289W03	CP., 1μF
C1124	08S45677W14	CP., 12pF
C1125	08S45677W05	CP., 3pF
C1127	08S65128F65	CP., 4700pF
C1128	08S65128F63	CP., 3300pF
C1131	08T15399W03	CP., 0.047μF
C1132	08S45676W62	CP., 1200pF
C1133	08S35374W01	CP., 0.1μF
C1134	08S65128F79	CP., 0.027μF
C1135	08S65128F62	CP., 2700pF

NOTE : ×: For CDE-7821 Model Only, □: For CDE-7820S Model Only, Others : Common.

Symbol No.	Part No.	Description
C1136	08T55487W02	CP., 0.22μF
C1138	08S35374W01	CP., 0.1μF
C1140	08S35374W01	CP., 0.1μF
E1201	23T25191W42	CP. ELY., 22μF / 6.3V
E1202	23T25191W42	CP. ELY., 22μF / 6.3V
E1204	23T25191W05	CP. ELY., 10μF / 6.3V
C1205	08S45677W32	CP., 68pF
E1205	23T25191W42	CP. ELY., 22μF / 6.3V
C1206	08S45677W32	CP., 68pF
E1206	23T25191W41	CP. ELY., 10μF / 16V
C1207	08S45677W32	CP., 68pF
E1207	23T25191W05	CP. ELY., 10μF / 6.3V
C1208	08S45677W32	CP., 68pF
C1209	08S45677W32	CP., 68pF
C1210	08S45677W32	CP., 68pF
C1212	08S45677W32	CP., 68pF
C1213	08S45677W32	CP., 68pF
C1215	08S65128F79	CP., 0.027μF
C1216	08S82122F61	CP., 1000pF
C1217	08S82122F61	CP., 1000pF
C1501	08S65128F79	CP., 0.027μF
E1501	23T25191W41	CP. ELY., 10μF / 16V

Resistors

(All resistors are chip 1/16W±5% unless otherwise noted.)

Symbol No.	Part No.	Description
R1101	06S45674W57	1K ohm
R1102	06S45674W81	10K ohm
R1103	06S45674W97	47K ohm
R1104	06S45675W06	100K ohm
R1105	06S45675W34	2.2M ohm
R1106	06S45674W93	33K ohm
R1108	06S64995F77	10K ohm 1/10W
R1109	06S45674W81	10K ohm
R1110	06S45674W57	1K ohm
R1111	06S45674W57	1K ohm
R1112	06S45674W65	2.2K ohm
R1113	06S70072F22	51 ohm 1/4W
R1114	06S70072F22	51 ohm 1/4W
R1115	06S45674W85	15K ohm
R1116	06S45674W81	10K ohm
R1117	06S45674W73	4.7K ohm
R1119	06S45674W85	15K ohm
R1121	06S45674W85	15K ohm
R1123	06S45674W91	27K ohm
R1124	06S45674W57	1K ohm
R1125	06S45674W33	100 ohm
R1126	06S45674W33	100 ohm
R1127	06S45674W54	750 ohm
R1128	06S45674W54	750 ohm
R1130	06S45674W97	47K ohm
R1131	06S45674W57	1K ohm
R1135	06S45674W65	2.2K ohm
R1136	06S45674W77	6.8K ohm
R1137	06S45674W81	10K ohm
R1138	06S45674W95	39K ohm
R1140	06S45675W02	68K ohm
R1141	06S45674W91	27K ohm
R1143	06S45674W77	6.8K ohm
R1145	06S45674W92	30K ohm
R1146	06S45674W81	10K ohm
R1147	06S45674W81	10K ohm
R1150	06S64995F77	10K ohm 1/10W
R1151	06S45675W04	82K ohm
R1205	06S45674W25	47 ohm
R1206	06S45674W25	47 ohm
R1207	06S45674W95	39K ohm
R1208	06S45674W95	39K ohm
R1209	06S45674W90	24K ohm
R1210	06S45674W90	24K ohm
R1211	06S45674W95	39K ohm
R1212	06S45674W95	39K ohm
R1213	06S45674W90	24K ohm
R1214	06S45674W90	24K ohm
R1215	06S45674W90	24K ohm
R1216	06S45674W90	24K ohm
R1217	06S45674W90	24K ohm
R1218	06S45674W90	24K ohm
R1219	06S45674W73	4.7K ohm
R1220	06S45674W73	4.7K ohm
R1221	06S45674W73	4.7K ohm
R1222	06S45674W73	4.7K ohm

Miscellaneous

Symbol No.	Part No.	Description
□ CB401	09T85299W16	Connector (16P)
□ CH401	09T85298W16	Connector (16P)
HD1201	88T55261W01	Pick-Up Unit
M1301	01V73300W33	Assy., Motor-Worm (7V-370mA)
M1302	01V73300W35	Assy., Motor Spindle (2V-90mA)
M1303	01V73300W38	Assy., Motor Sled (7V-370mA)
S1301	40T25956W02	Switch, Detector (DISC CHUCKING POSITION)
S1302	40T25956W02	Switch, Detector (DISC LOAD)
S1303	40T25956W01	Switch, Detector (DISC LOAD)
S1304	40T25956W02	Switch, Detector (DISC END)
S1305	40T71025F03	Switch, Detector (LIMIT)

NOTE : □: For CDE-7820S Model Only, Others : Common.

Cabinet Assembly Parts List

NOTE : For the parts not mentioned, refer to the Service Manual for CDE-7821 / CDE-7820 (Part No. 68E21970S01).

Symbol No.		Index	Part No.	Description
×	1	3-C	01V73100W59	Assy., Nose Unit
□	1	3-C	01V84200W85	Assy., Nose Unit
	4	5-D	13C80236W01	Assy., Front Escutcheon
	19	2-E	81D70953W01	CD Deck Mechanism, DP24L010
×	20	5-B	13D70546W02	Assy., Nosepiece
□	20	5-B	13D70546W09	Assy., Nosepiece
	25	4-B	75T75253W02	Rubber, Electric

NOTE : ×: For CDE-7821 Model Only, □: For CDE-7820S Model Only, Others : Common.

Packing Assembly Parts List

NOTE : For the parts not mentioned, refer to the Service Manual for CDE-7821 / CDE-7820 (Part No. 68E21970S01).

Symbol No.		Part No.	Description
×	101	68P61329W58	Owner's Manual
□	101	68P71193W65	Owner's Manual
	105	15D71506W01	Carrying, Case

NOTE : ×: For CDE-7821 Model Only, □: For CDE-7820S Model Only, Others : Common.

Semi-Conductor Lead Identifications

NOTE : For the parts not mentioned, refer to the Schematic Diagram.

75524W01 : IC601

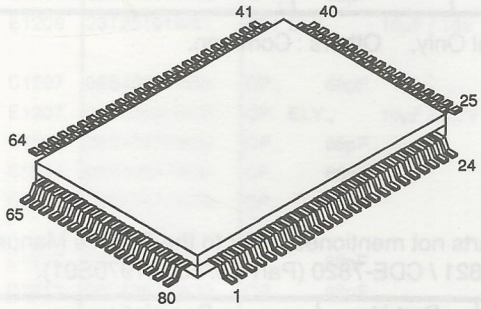

PIN NO.	CODE ADDRESS	I/O	PIN NO.	CODE ADDRESS	I/O	PIN NO.	CODE ADDRESS	I/O	PIN NO.	CODE ADDRESS	I/O
1	NOSE	I	21	B-HOLD	I	41	BUS2	I/O	61	PWR-IC	O
2	KEY-3	I	22	A-HOLD	I	42	BUS3	I/O	62	PULL-DOWN	—
3	KEY-2	I	23	L-CONT	O	43	CCE	O	63	V_{CC}	—
4	KEY-1	I	24	SW-1	I	44	BUCK	O	64	INTLZ	I
5	GND	—	25	SW-2	I	45	PULL-DOWN	—	65	AREA-1	I
6	GND	—	26	SW-3	I	46	V-CONT	O	66	AREA-2	I
7	X2	O	27	SW-4	I	47	PLL-D-I	I	67	AREA-3	I
8	X1	I	28	B-DET	I	48	PLL-D-O	O	68	NC	—
9	GND	—	29	LIMIT SW	I	49	PLL-CLK	O	69	PULL-DOWN	—
10	OSC1	I	30	PULL-DOWN	—	50	PLL-CE	O	70	NC	—
11	OSC2	O	31	LOAD-FWD	O	51	SD/$\overline{ST}$	I	71	NC	—
12	$\overline{RESET}$	I	32	LOAD-BWD	O	52	NFP ON-2	O	72	AV_{CC}	—
13	GND	—	33	LOCK	O	53	NFP ON-1	O	73	AREA-4	I
14	LCD-CLK	O	34	A-HOLD	I	54	A-MUTE	O	74	PULL-DOWN	—
15	LCD-CE	O	35	LSI-RST	O	55	VOL-CLK	O	75	PULL-DOWN	—
16	LCD-DATA	O	36	PULL-DOWN	—	56	VOL-DATA	O	76	PULL-DOWN	—
17	$\overline{LCD\text{-}INH}$	O	37	PULL-DOWN	—	57	PWR-ON	O	77	GND	—
18	LCD-ON	O	38	PULL-DOWN	—	58	PULL-UP	—	78	GND	—
19	NC	—	39	BUS0	I/O	59	OUT-REM	O	79	S-METER	I
20	PULL-DOWN	—	40	BUS1	I/O	60	P-ANT	O	80	T-SENS	I

TC9296F : IC1101 (DP24L010)