M O D E L: "220"

SERIES: "DA" **TYPE: 2 UNIT AUTO**

DESCRIPTION:

6 Tube, Auto, Superheterodyne,
Broadcast Receiver (2 unit)

TUBE TYPES:

78	-	RF Stage
6A7	-	Oscillator Modulator
78	-	IF Stage
6B7S	-	2nd Detector, A.V.C., 1st Audio
41	-	Output
84	-	Rectifier

IF FREQUENCY:

166, 173 Kc.

B/C COVERAGE:

1550 - 540 Kcs.

S/W COVERAGE:

-

COMMENTS:

1. Non synchronous vibrator

CHANGE NOTICE INDEX.

L NOTICES HERE LISTED, TO BE FOUND IN CIRCUIT CHANGE NOTICE FILE.

THESE CHANGES AFFECT MODEL DA .

. OF NGE TICE	NATURE OF CHANGE	DATE OR RUN EFFECTIVE.
E 35	Reversal of RF choke coil on mounting strip	9-7-37 (28/37
E 75	Condenser C 23 & Resistor R 17 deleted & changed to PC 117	3-12-37

Date 2.6.38 **SPECIFICATION.** Number 767

Exp. Book No.

Part Name NON SYNCHRONOUS 12 VOLT VIBRATOR

Part Number PM132 Blue Print Number File Number

Used in Models 12V. FA 12V. DA FB HE Test Procedure Number 33

CHANGE INDEX.

Date	Change Notice No.	Nature of Change (In Brief)	Authorised by

DESCRIPTION: Standard 6 prong Non Synchronous 4 contact Vibrator for 12 Volt operation.

DIMENSIONS: 1-1/2" diameter 3-3/16" high (Exclusive of pins)

OPERATION VOLTAGES: 11 to 16 Volts.

STARTING VOLTAGES: 4 Volts.

NO LOAD CURRENT AT 12 VOLTS: 0.28 amperes at 12 Volts when used with RCA 12V. transformer PT140.

WORKING VOLTAGE: 20 Watts.

Unbalance between each side of transformer secondary current must not exceed 1 M/A. when working at 12 Volts.

FREQUENCY OF REED: 100 cycles plus and minus 5 cycles.

DRIVING COIL RESISTANCE: 90 ohms plus and minus 5%

Connection to base as per diagram.

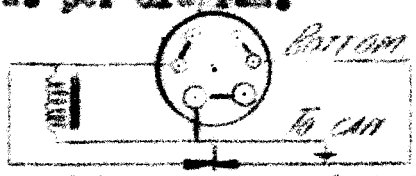

Previous vibrators used have been quiet in operation with the filte circuits designed for them, and these vibrators, being prototypes, will be expected to perform under the same conditions. Those proving noisy or unbalanced will be returned for readjustment.

Copies: Continental Carbon Co. Vibrator Test Dept. Mr. Ingram Miss Badman Store Prod. Office Research File.

Signature W. C. Cook

Date 2.6.38 SPECIFICATION. Number 766

Exp. Book No.

Part Name NON SYNCHRONOUS 6V. VIBRATOR

Part Number PM 131 Blue Print Number File Number

Used in Models PA DA PD ED KE ME Test Procedure Number

CHANGE INDEX.

Date	Change Notice No.	Nature of Change (In Brief)	Authorised by

DESCRIPTION: Standard 6 prong Non Synchronous 4 contact Vibrator for 6 Volt operation.

DIMENSIONS: 1-1/2" diameter 3-3/16" high (not including pins)

OPERATING VOLTAGES: 5.5 to 8 VOLT.

STARTING VOLTAGE: 2 Volts.

NO LOAD CURRENT AT 6 VOLTS: 0.5 amperes maximum with RCA transformer PT136

WORKING VOLTAGE: (MAXIMUM): 20 Watts

Unbalance between each side of transformer secondary current must not exceed 1 M/A.

FREQENCY OF REED: 100 cycles per second Plus and minus 5 cycles.

DRIVING COIL RESISTANCE: 55 ohms plus and minus 5%.

Connections to base as per diagram.

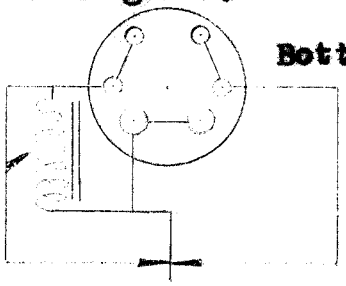

Bottom view of base.

Driving Coil.

Previous vibrators used have been quiet in operation with the filter circuits designed for them, and these vibrators being prototypes, will be expected to work under the same conditions. Those proving noisy or unbalanced will be returned for readjustment.

Copies: Continental Carbon Co. Vibrator Test. Dept. Mr. Ingram
Miss Badman Store
Prod.Office Research (7)

Signature W. G. Cook

CHANGE NOTICE.

3.12.37. XXXXXX B75

EFFD.4.12.37. Before / After Production Number of Change Notice 2100 / 2117

DA BUFFER CONDENSER

Model ..... Part Name ..... Part Number .....

Blue Print Number ..... File Number ..... Test Procedure Number .....

Copies to AUTO REPAIR DEPT. REPAIR DEPT (2) MISS BADMAN PROD.OFFICE REDSTON MR. INGRAM ELECT TEST DEPT. RESEARCH FILE.

Nature of Change

Condenser No. C23 .05/1500 Volt pap r condenser
and Resistor No. R17 20,000 ohm 3 watt
to be
deleted and changed to a .003 mfd 2000 volt mica condenser PC117.

Requirements for auto repairs approximately 100 per month including interstate.

Service data.

Reason for Change Breakdown of .02/1500V. condensers and consequent burn out of 20,000 ohm 3 watt resistor.

All repair sets immediately.

Date or Run Effective .....

D.R. McGREGOR G. SCOTT.

Authorised by ..... Suggested by .....

DOSSIER 51

MODEL D.A. 30-9-37

One of the above receivers was brought in from the yard with a complaint of vibrat r buzz in the speaker. Although the level of buzz was normal compared with other D.A.'s the customer found it objectionable. This was cured by decoupling the plate circuit of the 6B7S valve by means of a 400 ohm 1/3 Watt resistor by-passed by a 0.1 mfd 400 Volt stedipower condenser. The customer was very satisfied with the result so that any future complaint of this nature can be eliminated in a similar way.

Copies: Mr. Abrahams, Service Data Tech Committee D.A. and E.E. File, Mr. Anderson

W. COOK.

NB47 P 81

CHANGE NOTICE.

Date 9.7.37. Before/After Production Number of Change Notice E55

RECD 13.7.37.

Model DA EE ED FD FB Part Name RF CHOKE Part Number PT109
HE HF HG

Blue Print Number ..... File Number ..... Test Procedure Number 19

Copies to TRANSFORMER DEPT. COIL DEPT. DESIGN DEPT. (3)

W.J. COOK FILE.

Nature of Change Reversal of coil on mounting strip so that inside turn comes out from coil on side next to bakelite strip.

Also increase in inside diameter of bakelite protecting tube from 3/4" to 13/16".

No service data.

Reason for Change Prevention of damage to coil when assembling same.

Date or Run Effective Immediately 28/37.

Authorised by D.R. McGREGOR Suggested by W.C. COOK.

CONDENSERS:

C1. .00005 mfd. Mica Cond. 20% Tolerance.
2. .05 mfd. 200V. Paper cond. 10% Tolerance.
3. " " " " " " "
4. " " " " " " "
5. " " " " " " "
6. " " " " " " "
7. Aerial section of Three gang condenser.
8. R.F. section of three gang condenser.
9. Oscillator section of three gang condenser.
10. .00025 mfd. Mica condenser 10% Tolerance.
11. .05 mfd. 400V. Paper cond. " "
12. .0001mfd. Mica condenser " "
13. .0005mfd. " " " "
14. .00025mfd. " " " "
15. .006mfd. 200V Paper " " "
16. .05mfd. 400V. Paper cond. " "
17. .05mfd. " " " " "
18. .05mfd. " " " " "
19. .25mfd. 200V. " " " "
20. .25mfd. " " " " "
21. 10 mfd. 350V. Elect. ")
22. 6 mfd. 400V. " ") in one container.
23. .02mfd. 1500V. Paper cond. 10% Tolerance
24. .5mfd. 200V. " " " "
25. .5mfd. " " " " "
26. .002mfd. Mica cond. " "
27. .002mfd. " " " "
28. .004mfd. " " " "
29. .5mfd. " Paper cond. " "
30.) Trimmers of 1st IF Transformer.
31.)
32.) Trimmers of 2nd IF Transformer.
33.)
34. .25mfd. 200V. Paper cond. 10% Tolerance
35. .00079mfd. Mica cond. 2% "

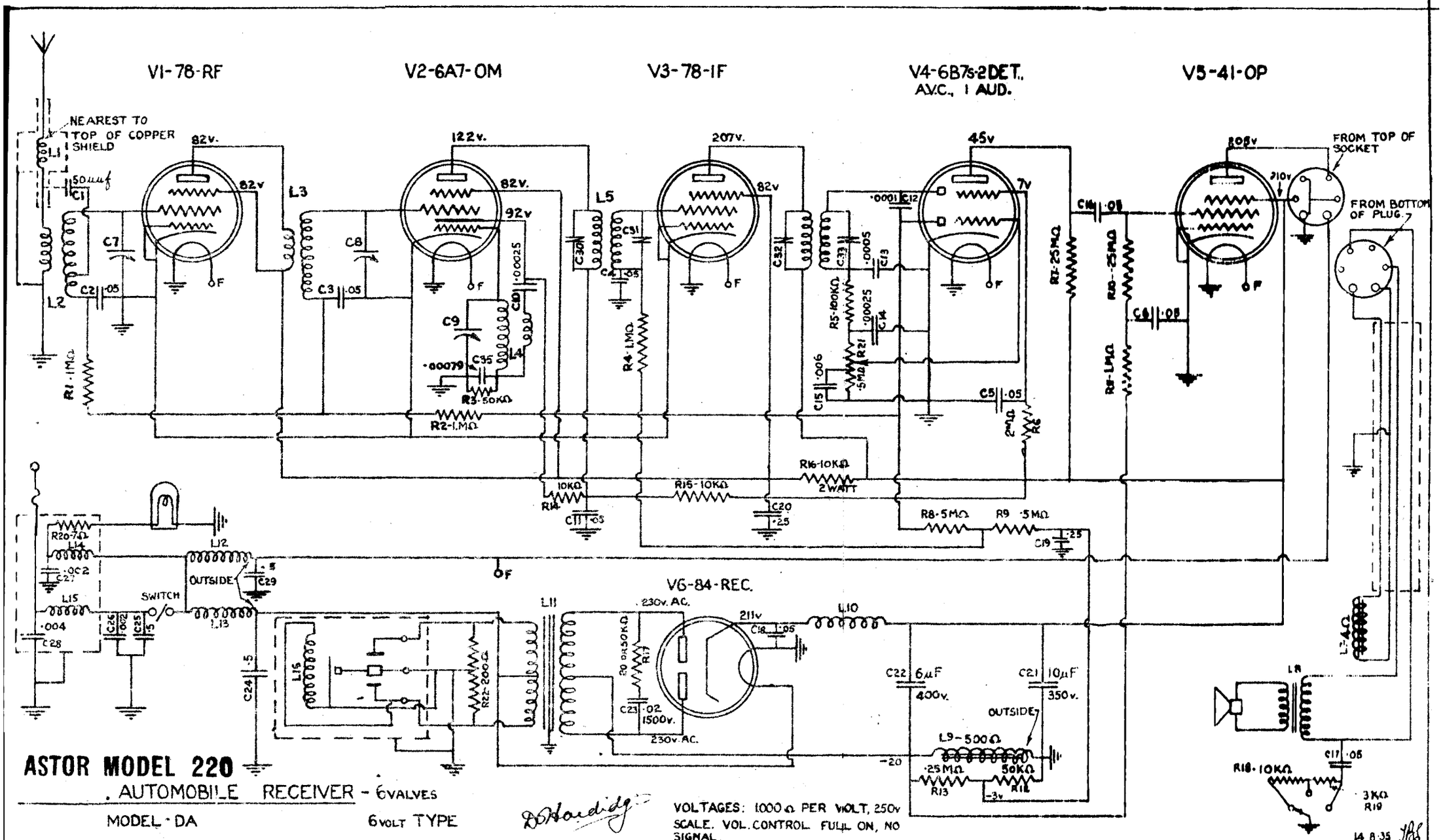

ASTOR MODEL 220

AUTOMOBILE RECEIVER - 6 VALVES

MODEL - DA

6 VOLT TYPE

14 8 35

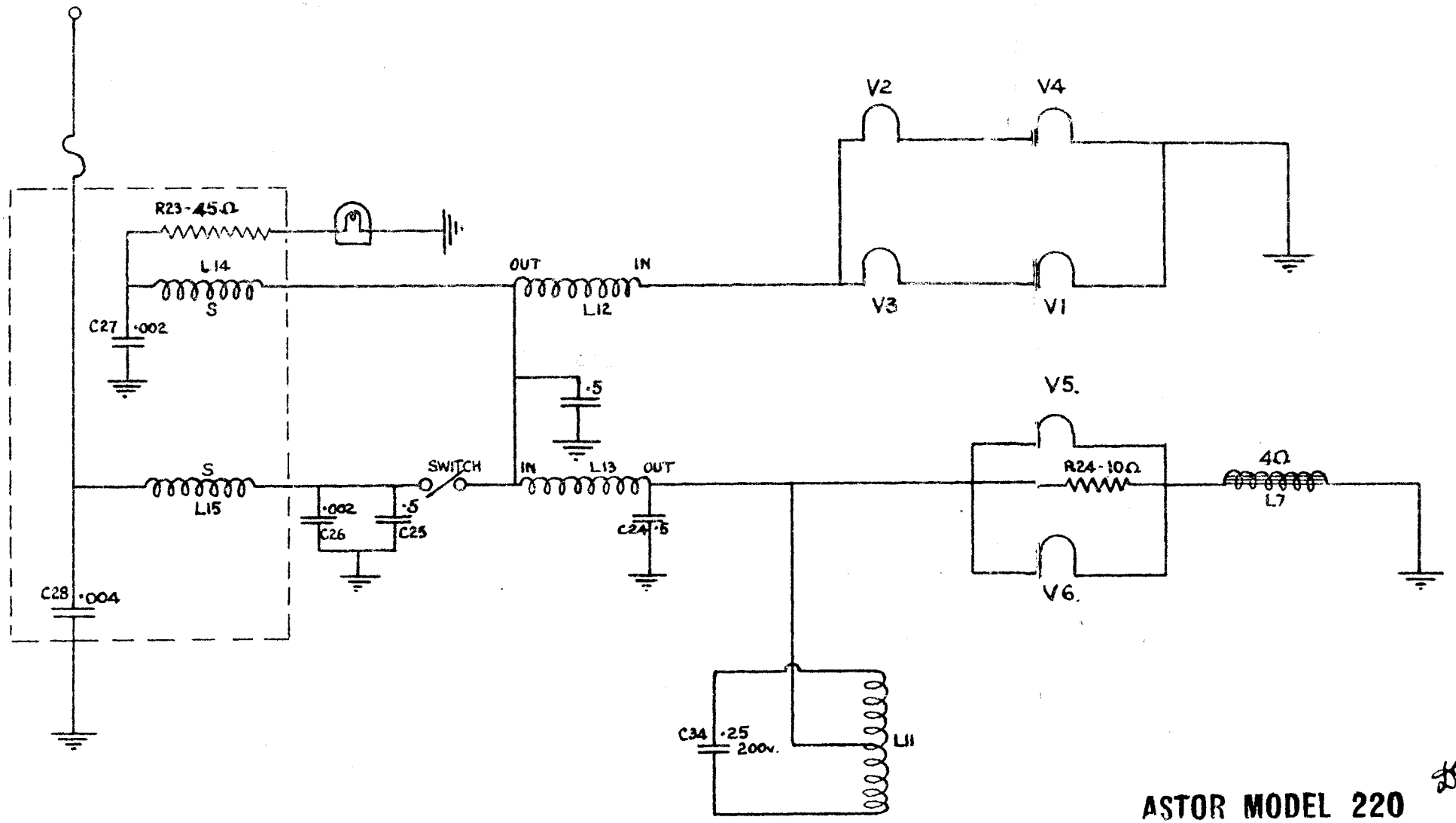

ASTOR MODEL 220
AUTOMOBILE RECEIVER

CONNECTIONS FOR 12 VOLT TYPE. SEE 6 VOLT DIAGRAM FOR REMAINDER OF CIRCUIT.