SRC-SW
MUTE
SQ
PWR
VOLUME
SOURCE
PUSH SEL
TA
AF
MP3/WMA
Panasonic
CQ-C5400N
MOSFET 50Wx4
CD R·D·S
TILT
OPEN
DIM
MENU
TUNE
BAND
SET/AM
DISP
TRACK
PTY
DISC / FOLDER
SCROLL
RANDOM
SCAN
REPEAT
1
2
3
4
5
6

# (CQ-C5400N)

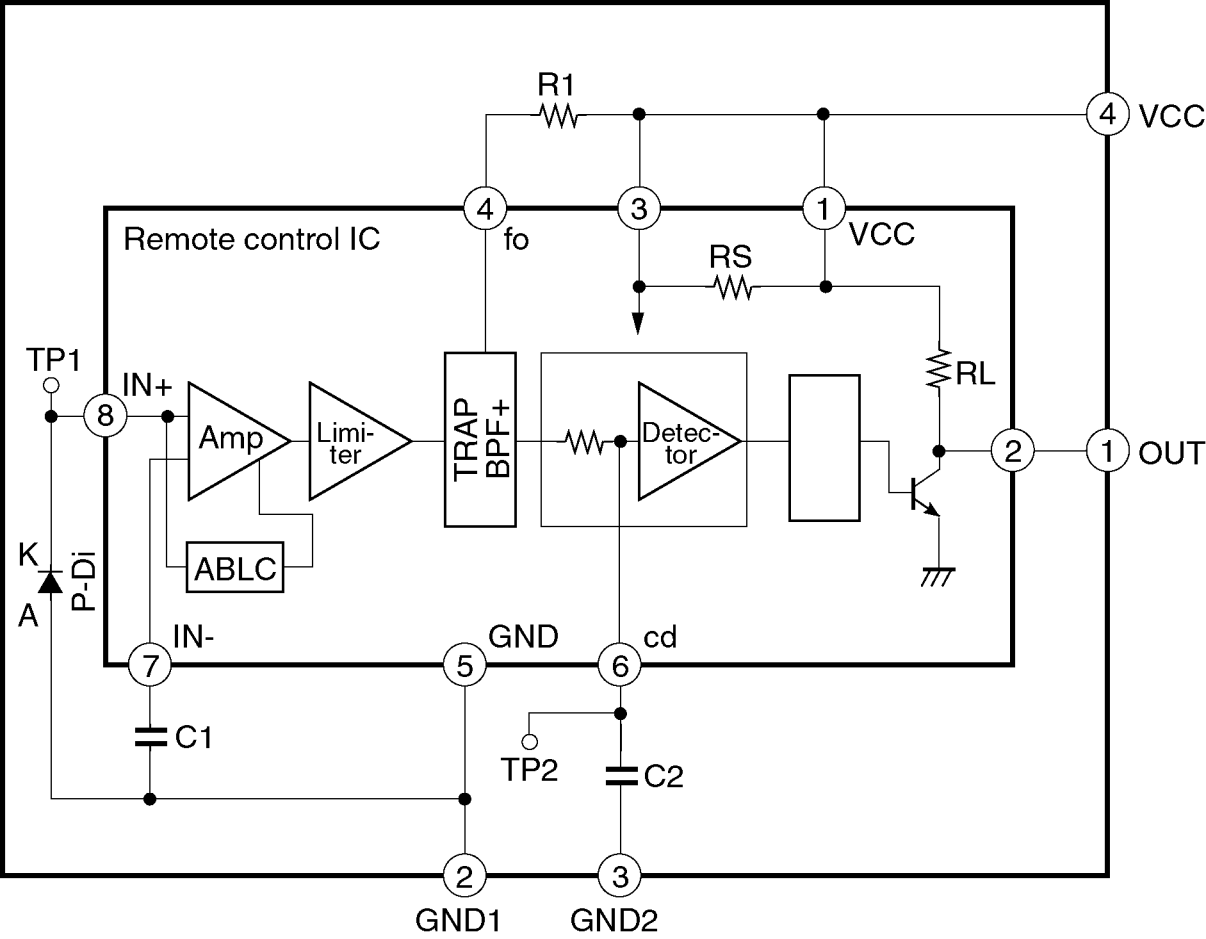
R1
4
VCC
Remote control IC
4
fo
3
1
VCC
RS
TP1
IN+
8
Amp
Limi-
ter
TRAP
BPF+
Detec-
tor
RL
2
1
OUT
K
P-Di
A
ABLC
IN-
GND
cd
7
5
6
C1
TP2
C2
2
3
GND1
GND2

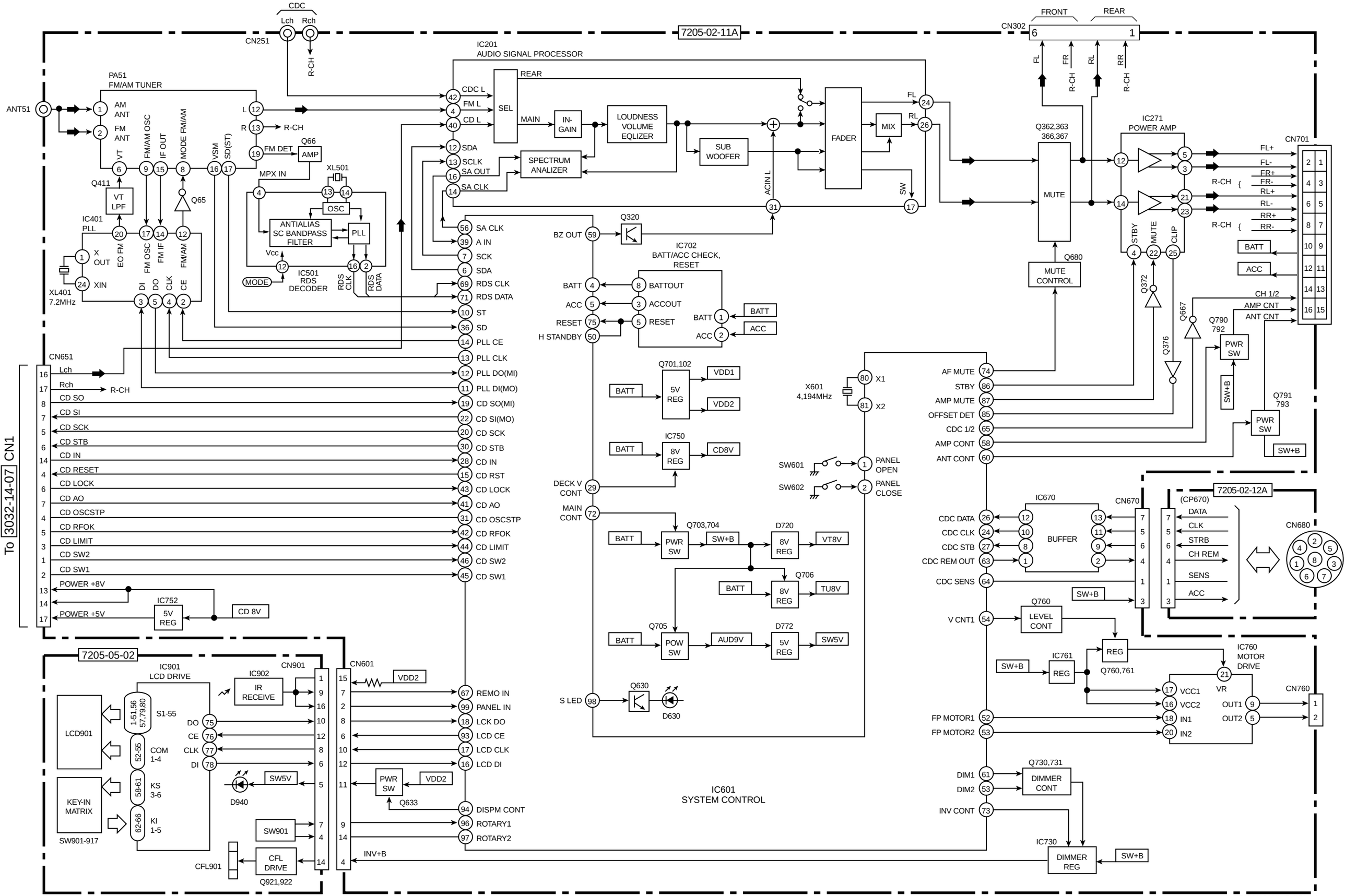
7205-02-11A
CDC
Lch
Rch
CN251
R-CH
IC201
AUDIO SIGNAL PROCESSOR
PA51
FM/AM TUNER
ANT51
AM ANT
FM ANT
VT
FM/AM OSC
IF OUT
MODE FM/AM
VSM
SD(ST)
L
R
FM DET
Q66
AMP
MPX IN
XL501
OSC
ANTIALIAS SC BANDPASS FILTER
PLL
Vcc
MODE
IC501 RDS DECODER
RDS CLK
RDS DATA
Q411
VT LPF
Q65
IC401 PLL
X OUT
XIN
XL401 7.2MHz
EO FM
FM OSC
FM IF
FM/AM
DI
DO
CLK
CE
CDC L
FM L
CD L
SDA
SCLK
SA OUT
SA CLK
SEL
REAR
MAIN
IN-GAIN
LOUDNESS VOLUME EQLIZER
SUB WOOFER
SPECTRUM ANALIZER
ACIN L
FADER
MIX
SW
FL
RL
SA CLK
A IN
SCK
SDA
RDS CLK
RDS DATA
ST
SD
PLL CE
PLL CLK
PLL DO(MI)
PLL DI(MO)
CD SO(MI)
CD SI(MO)
CD SCK
CD STB
CD IN
CD RST
CD LOCK
CD AO
CD OSCSTP
CD RFOK
CD LIMIT
CD SW2
CD SW1
BZ OUT
Q320
IC702
BATT/ACC CHECK, RESET
BATTOUT
ACCOUT
RESET
H STANDBY
BATT
ACC
Q701,102
5V REG
VDD1
VDD2
IC750
8V REG
CD8V
DECK V CONT
MAIN CONT
Q703,704
PWR SW
SW+B
D720
8V REG
VT8V
Q706
TU8V
Q705
POW SW
AUD9V
D772
5V REG
SW5V
S LED
Q630
D630
IC601
SYSTEM CONTROL
CN651
To 3032-14-07 CN1
Lch
Rch
CD SO
CD SI
CD SCK
CD STB
CD IN
CD RESET
CD LOCK
CD AO
CD OSCSTP
CD RFOK
CD LIMIT
CD SW2
CD SW1
POWER +8V
POWER +5V
IC752
5V REG
CD 8V
7205-05-02
IC901
LCD DRIVE
CN901
IC902
IR RECEIVE
LCD901
1-51,56 57,79,80
S1-55
52-55
COM 1-4
58-61
KS 3-6
62-66
KI 1-5
KEY-IN MATRIX
SW901-917
DO
CE
CLK
DI
D940
SW5V
SW901
CFL DRIVE
CFL901
Q921,922
CN601
VDD2
PWR SW
Q633
INV+B
REMO IN
PANEL IN
LCK DO
LCD CE
LCD CLK
LCD DI
DISPM CONT
ROTARY1
ROTARY2
CN302
FRONT
REAR
FL
FR
RL
RR
R-CH
Q362,363
366,367
MUTE
MUTE CONTROL
Q680
IC271
POWER AMP
STBY
MUTE
CLIP
Q372
Q667
Q376
CN701
FL+
FL-
FR+
FR-
RL+
RL-
RR+
RR-
BATT
ACC
CH 1/2
AMP CNT
ANT CNT
Q790
792
PWR SW
SW+B
Q791
793
X601
4,194MHz
X1
X2
SW601
SW602
PANEL OPEN
PANEL CLOSE
AF MUTE
STBY
AMP MUTE
OFFSET DET
CDC 1/2
AMP CONT
ANT CONT
IC670
BUFFER
CN670
(CP670)
7205-02-12A
CN680
DATA
CLK
STRB
CH REM
SENS
ACC
CDC DATA
CDC CLK
CDC STB
CDC REM OUT
CDC SENS
V CNT1
Q760
LEVEL CONT
REG
Q760,761
IC761
IC760
MOTOR DRIVE
VR
VCC1
VCC2
IN1
IN2
OUT1
OUT2
CN760
FP MOTOR1
FP MOTOR2
DIM1
DIM2
INV CONT
Q730,731
DIMMER CONT
IC730
DIMMER REG

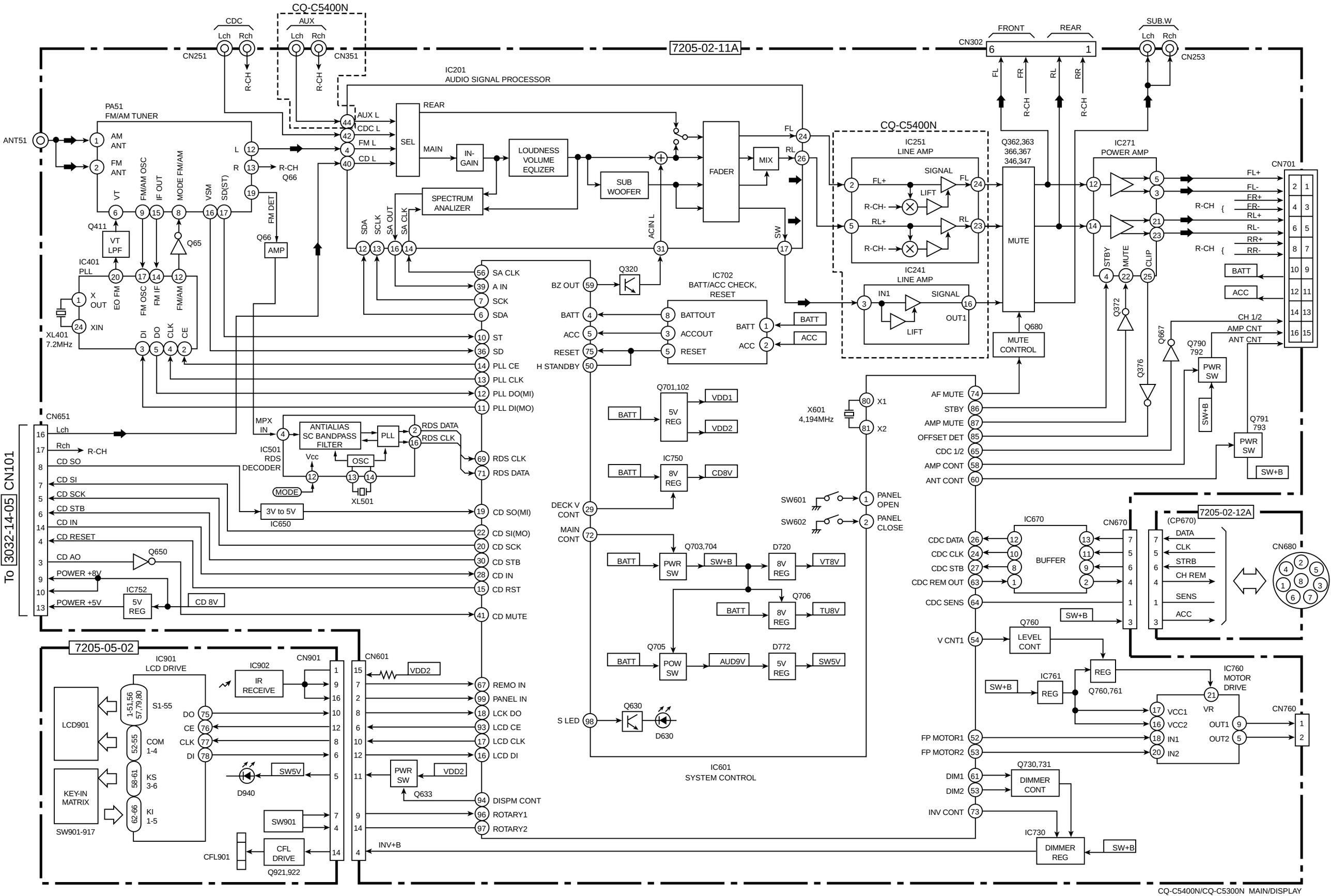
CQ-C5400N
CDC
AUX
Lch
Rch
CN251
CN351
R-CH
7205-02-11A
CN302
FRONT
REAR
6
1
SUB.W
CN253
FL
FR
RL
RR
IC201
AUDIO SIGNAL PROCESSOR
PA51
FM/AM TUNER
ANT51
AM ANT
FM ANT
AUX L
CDC L
FM L
CD L
SEL
REAR
MAIN
IN-GAIN
LOUDNESS VOLUME EQLIZER
SUB WOOFER
SPECTRUM ANALIZER
FADER
MIX
R-CH Q66
VT
FM/AM OSC
IF OUT
MODE FM/AM
VSM
SD(ST)
FM DET
Q411
VT LPF
Q65
Q66
AMP
IC401
PLL
X OUT
XIN
XL401 7.2MHz
EO FM
FM OSC
FM IF
FM/AM
DI
DO
CLK
CE
SDA
SCLK
SA OUT
SA CLK
ACIN L
SW
SA CLK
A IN
SCK
SDA
ST
SD
PLL CE
PLL CLK
PLL DO(MI)
PLL DI(MO)
BZ OUT
Q320
BATT
ACC
RESET
H STANDBY
IC702
BATT/ACC CHECK, RESET
BATTOUT
ACCOUT
RESET
CN651
Lch
Rch
CD SO
CD SI
CD SCK
CD STB
CD IN
CD RESET
CD AO
POWER +8V
POWER +5V
Q650
IC752
5V REG
CD 8V
MPX IN
ANTIALIAS SC BANDPASS FILTER
PLL
OSC
IC501 RDS DECODER
Vcc
MODE
XL501
RDS DATA
RDS CLK
3V to 5V
IC650
CD SO(MI)
CD SI(MO)
CD SCK
CD STB
CD IN
CD RST
CD MUTE
Q701,102
5V REG
VDD1
VDD2
IC750
8V REG
CD8V
DECK V CONT
MAIN CONT
Q703,704
PWR SW
SW+B
D720
8V REG
VT8V
Q706
TU8V
Q705
POW SW
AUD9V
D772
5V REG
SW5V
S LED
Q630
D630
IC601
SYSTEM CONTROL
SW601
SW602
PANEL OPEN
PANEL CLOSE
CN101
To 3032-14-05
7205-05-02
IC901
LCD DRIVE
IC902
IR RECEIVE
CN901
CN601
LCD901
S1-55
COM 1-4
KEY-IN MATRIX
KS 3-6
KI 1-5
SW901-917
DO
CE
CLK
DI
D940
SW901
CFL DRIVE
CFL901
Q921,922
REMO IN
PANEL IN
LCK DO
LCD CE
LCD CLK
LCD DI
DISPM CONT
ROTARY1
ROTARY2
INV+B
IC251
LINE AMP
SIGNAL
LIFT
FL+
RL+
R-CH-
IC241
LINE AMP
IN1
OUT1
Q362,363 366,367 346,347
MUTE
Q680
MUTE CONTROL
IC271
POWER AMP
STBY
MUTE
CLIP
Q372
Q376
Q667
CN701
FL+
FL-
FR+
FR-
RL+
RL-
RR+
RR-
BATT
ACC
CH 1/2
AMP CNT
ANT CNT
Q790 792
PWR SW
SW+B
Q791 793
X601 4,194MHz
X1
X2
AF MUTE
STBY
AMP MUTE
OFFSET DET
CDC 1/2
AMP CONT
ANT CONT
IC670
BUFFER
CN670
CDC DATA
CDC CLK
CDC STB
CDC REM OUT
CDC SENS
V CNT1
Q760
LEVEL CONT
7205-02-12A
(CP670)
DATA
CLK
STRB
CH REM
SENS
ACC
CN680
IC761
REG
Q760,761
IC760 MOTOR DRIVE
VCC1
VCC2
IN1
IN2
VR
OUT1
OUT2
CN760
FP MOTOR1
FP MOTOR2
DIM1
DIM2
Q730,731
DIMMER CONT
INV CONT
IC730
DIMMER REG

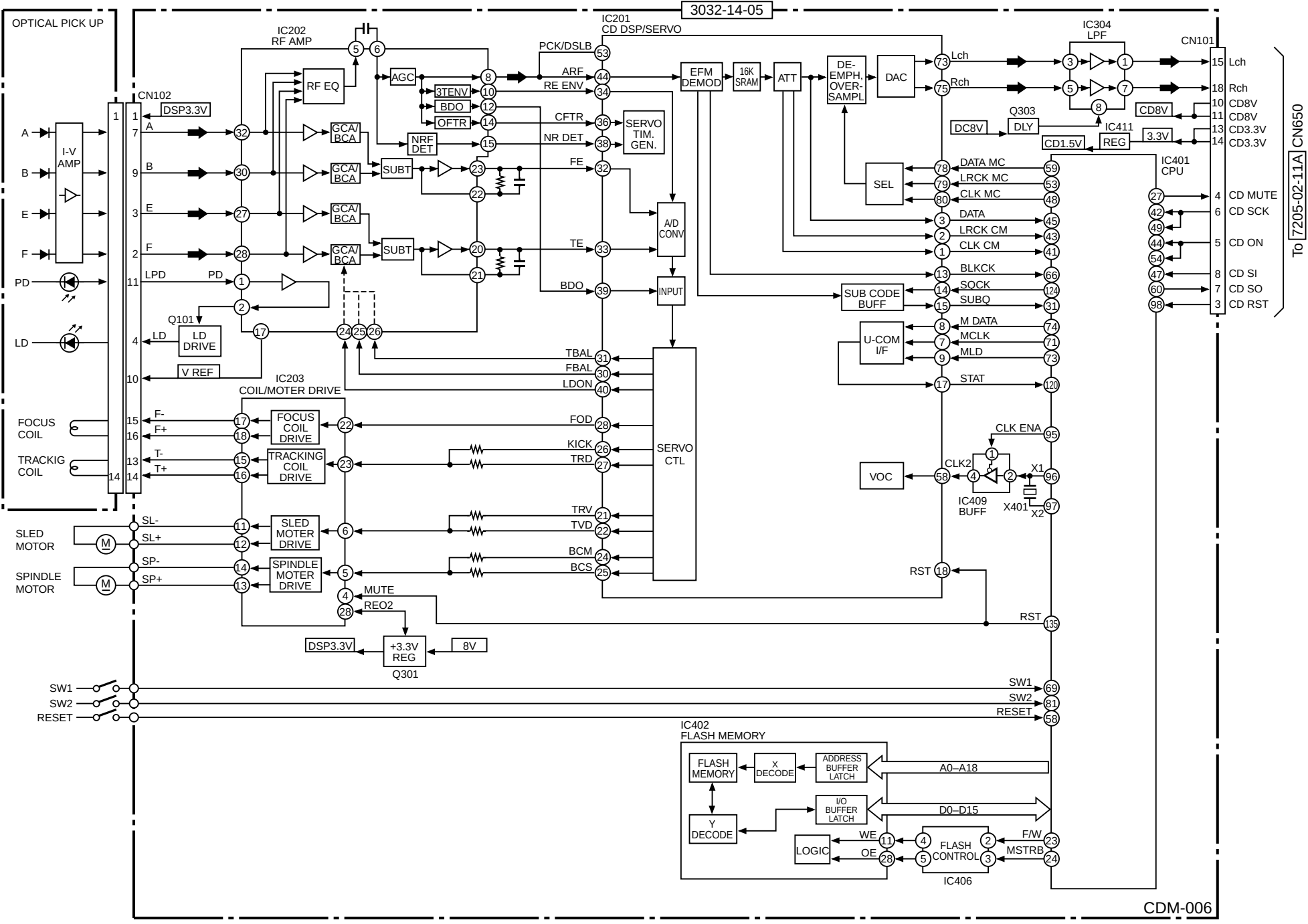
3032-14-05
OPTICAL PICK UP
IC202
RF AMP
IC201
CD DSP/SERVO
IC304
LPF
CN101
CN102
DSP3.3V
RF EQ
AGC
3TENV
BDO
OFTR
NRF DET
SUBT
GCA/BCA
PCK/DSLB
ARF
RE ENV
CFTR
NR DET
FE
TE
BDO
SERVO TIM. GEN.
EFM DEMOD
16K SRAM
ATT
DE-EMPH, OVER-SAMPL
DAC
Lch
Rch
Q303
DLY
DC8V
CD8V
CD1.5V
REG
3.3V
IC411
IC401
CPU
SEL
DATA MC
LRCK MC
CLK MC
DATA
LRCK CM
CLK CM
BLKCK
SOCK
SUBQ
SUB CODE BUFF
M DATA
MCLK
MLD
U-COM I/F
STAT
CD MUTE
CD SCK
CD ON
CD SI
CD SO
CD RST
To 7205-02-11A CN650
A/D CONV
INPUT
SERVO CTL
TBAL
FBAL
LDON
FOD
KICK
TRD
TRV
TVD
BCM
BCS
I-V AMP
A
B
E
F
PD
LD
LPD
Q101
LD DRIVE
V REF
IC203
COIL/MOTER DRIVE
FOCUS COIL
TRACKIG COIL
F-
F+
T-
T+
FOCUS COIL DRIVE
TRACKING COIL DRIVE
SLED MOTOR
SPINDLE MOTOR
SL-
SL+
SP-
SP+
SLED MOTER DRIVE
SPINDLE MOTER DRIVE
MUTE
REO2
DSP3.3V
+3.3V REG
Q301
8V
CLK ENA
CLK2
VOC
IC409 BUFF
X401
X1
X2
RST
SW1
SW2
RESET
IC402
FLASH MEMORY
FLASH MEMORY
X DECODE
ADDRESS BUFFER LATCH
A0–A18
I/O BUFFER LATCH
D0–D15
Y DECODE
LOGIC
WE
OE
FLASH CONTROL
F/W
MSTRB
IC406
CDM-006

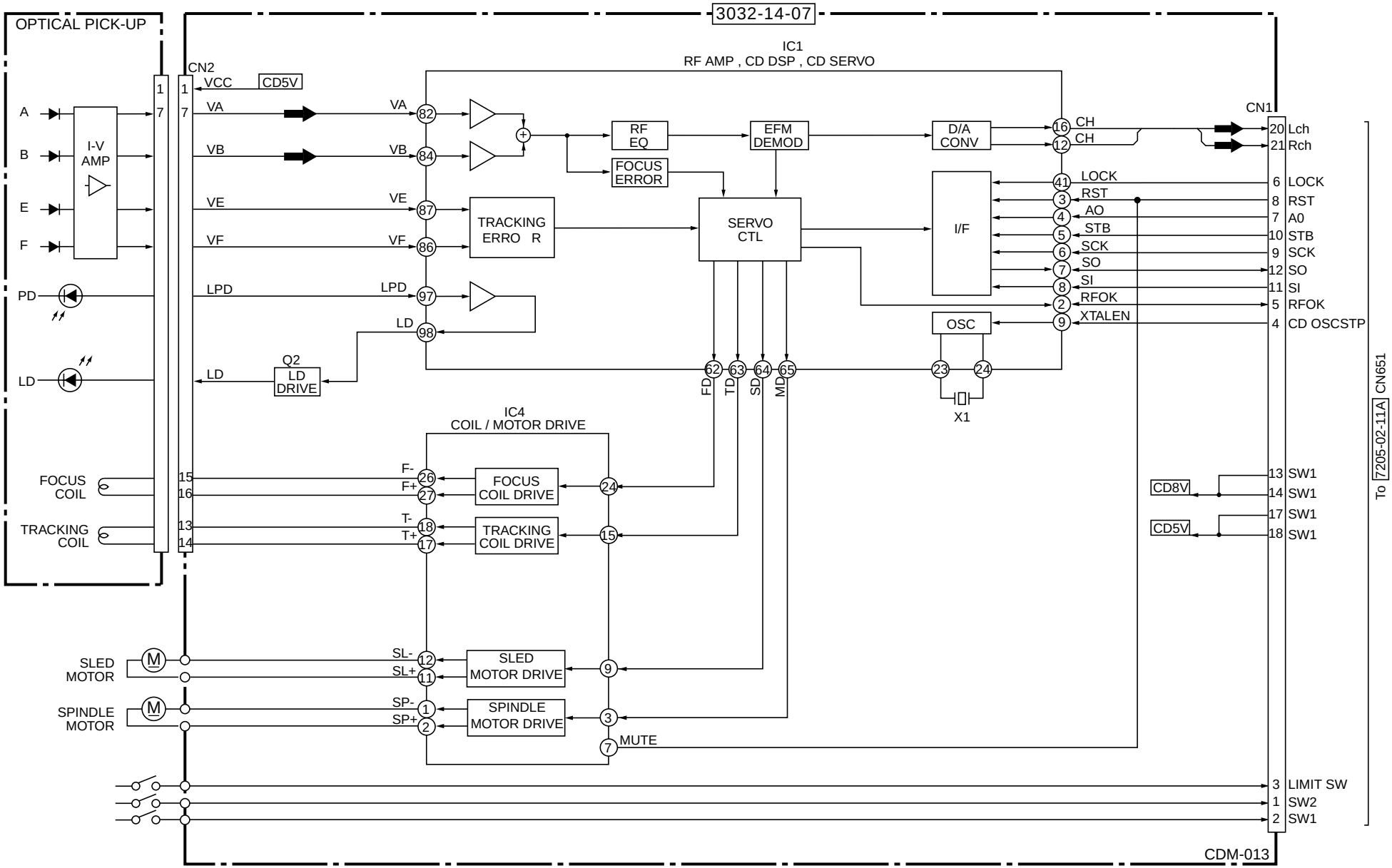


CQ-C5110N CD Deck

Printed in Japan 2004.2 (K) (Recycled Paper)

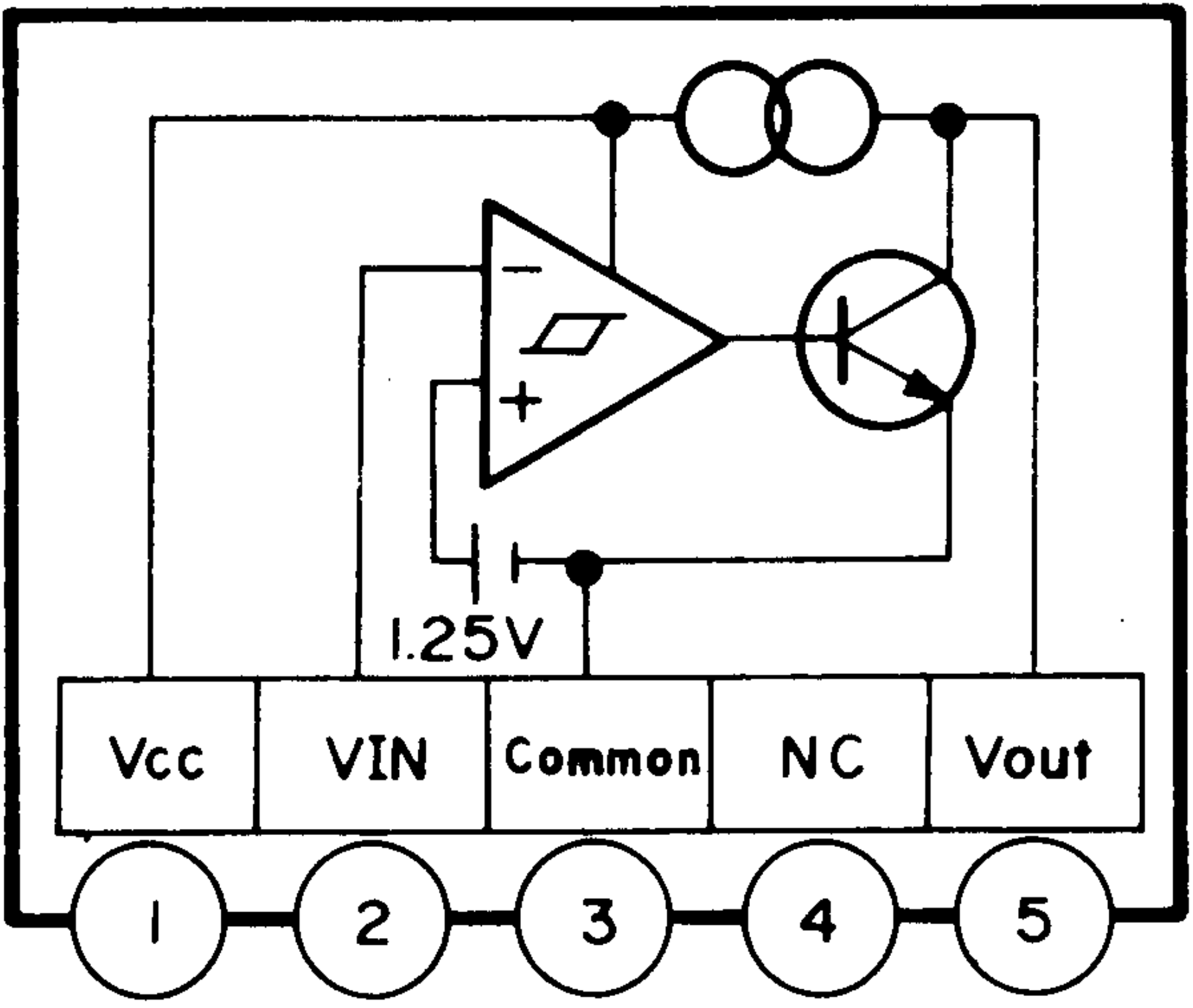
1.25V
Vcc
VIN
Common
NC
Vout
1
2
3
4
5

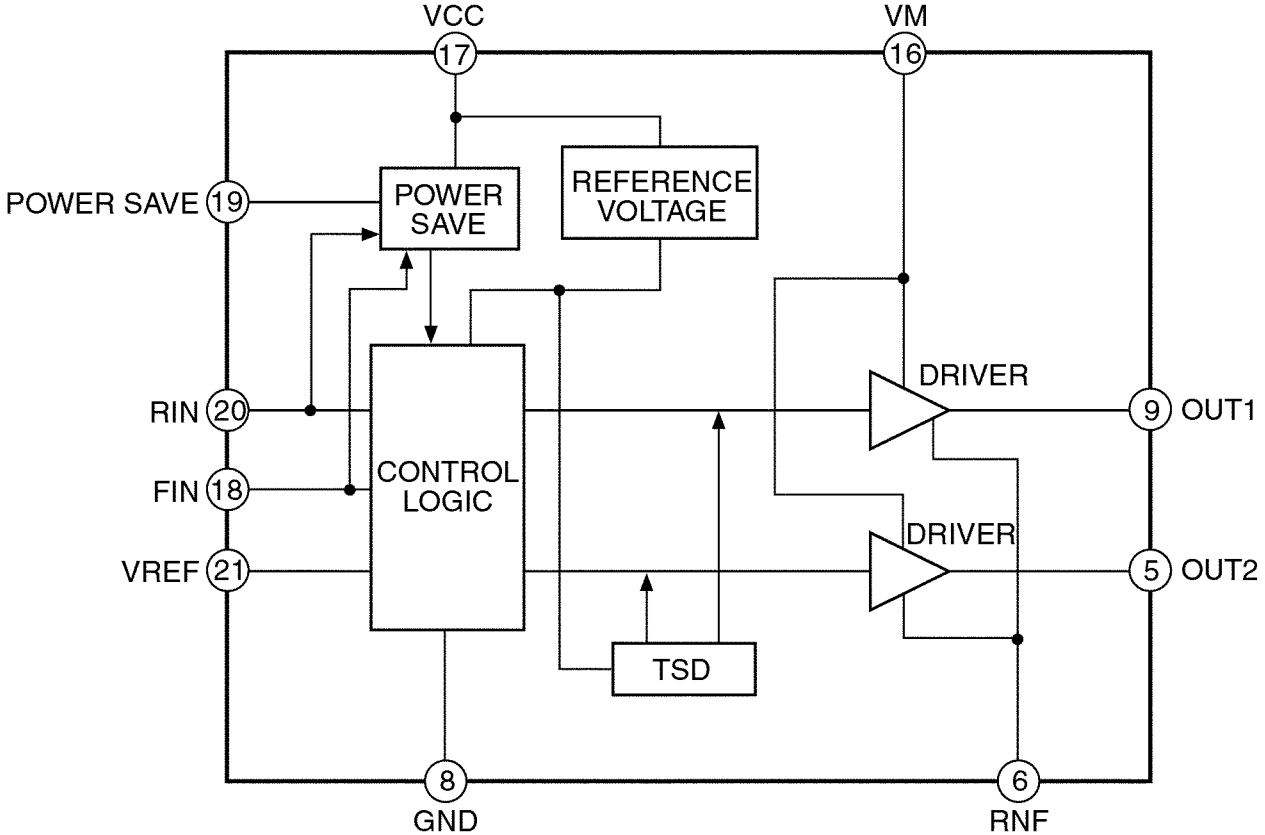
VCC
17
VM
16
POWER SAVE
19
POWER SAVE
REFERENCE VOLTAGE
RIN
20
FIN
18
VREF
21
CONTROL LOGIC
DRIVER
DRIVER
9
OUT1
5
OUT2
TSD
8
GND
6
RNF

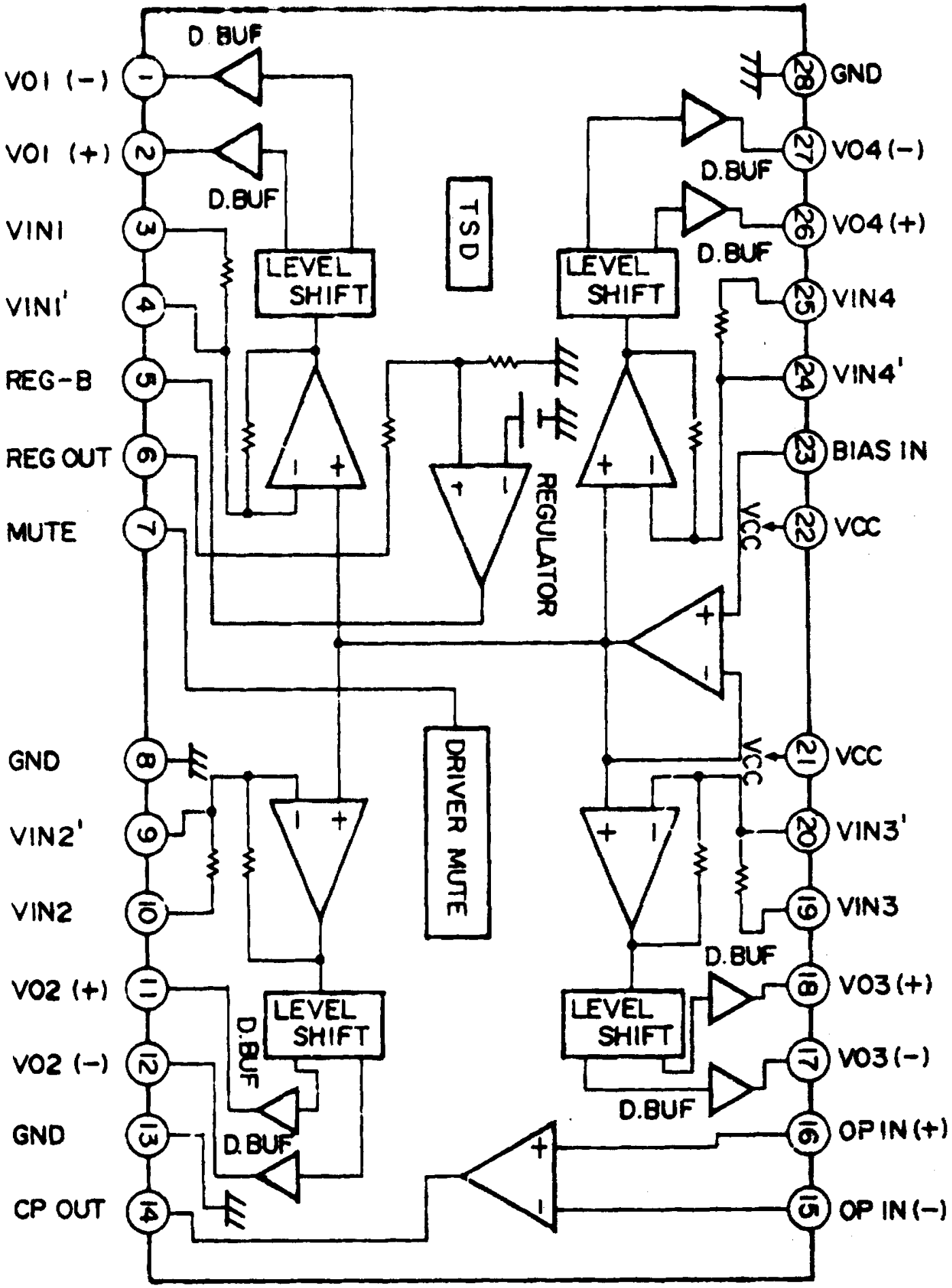
VO1 (−)
VO1 (+)
VIN1
VIN1'
REG-B
REG OUT
MUTE
GND
VIN2'
VIN2
VO2 (+)
VO2 (−)
GND
CP OUT
GND
VO4 (−)
VO4 (+)
VIN4
VIN4'
BIAS IN
VCC
VCC
VIN3'
VIN3
VO3 (+)
VO3 (−)
OP IN (+)
OP IN (−)
D. BUF
D.BUF
LEVEL SHIFT
TSD
REGULATOR
DRIVER MUTE

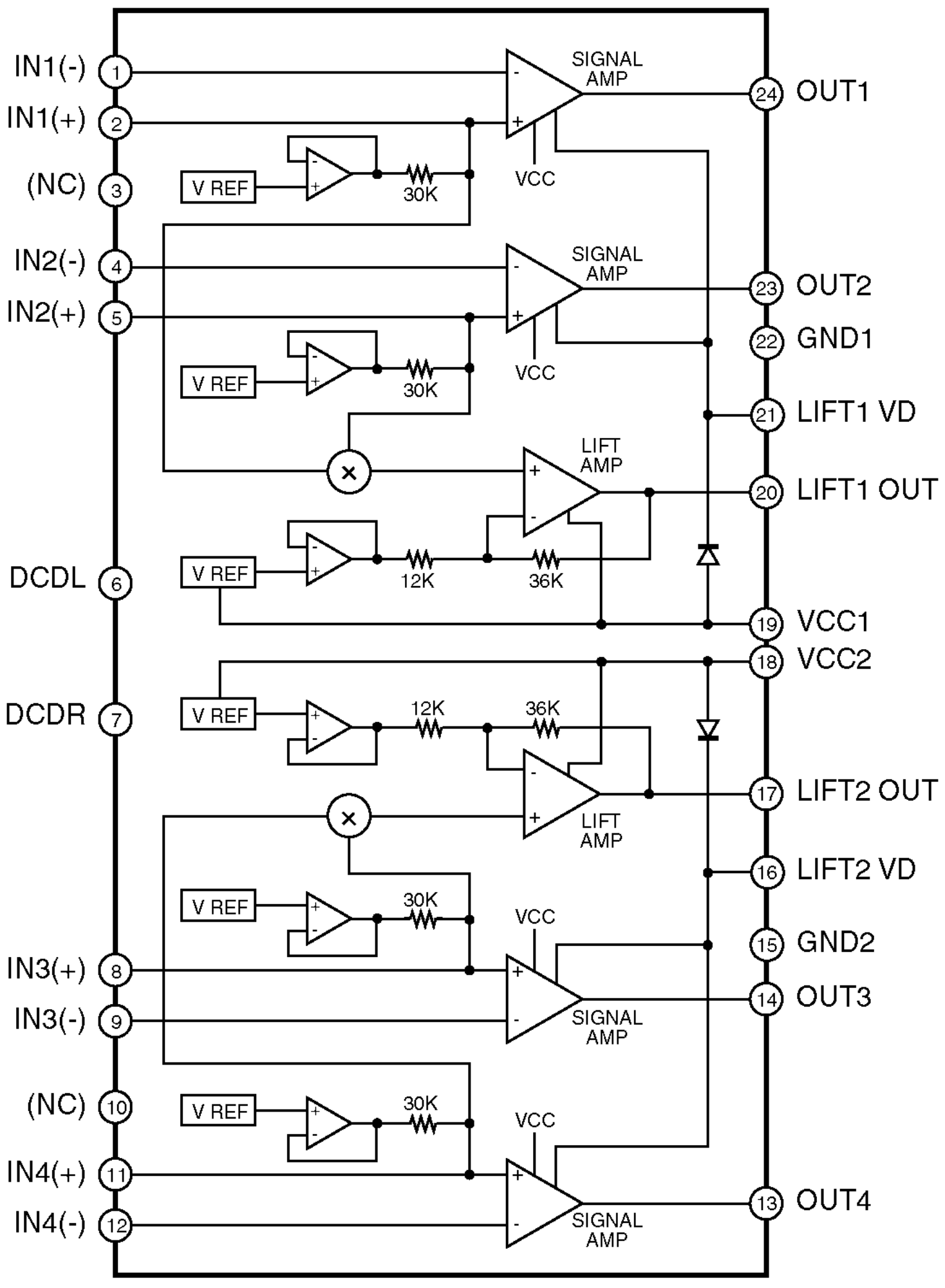
IN1(-)
1
IN1(+)
2
(NC)
3
IN2(-)
4
IN2(+)
5
DCDL
6
DCDR
7
IN3(+)
8
IN3(-)
9
(NC)
10
IN4(+)
11
IN4(-)
12
SIGNAL AMP
VCC
V REF
30K
LIFT AMP
12K
36K
24
OUT1
23
OUT2
22
GND1
21
LIFT1 VD
20
LIFT1 OUT
19
VCC1
18
VCC2
17
LIFT2 OUT
16
LIFT2 VD
15
GND2
14
OUT3
13
OUT4

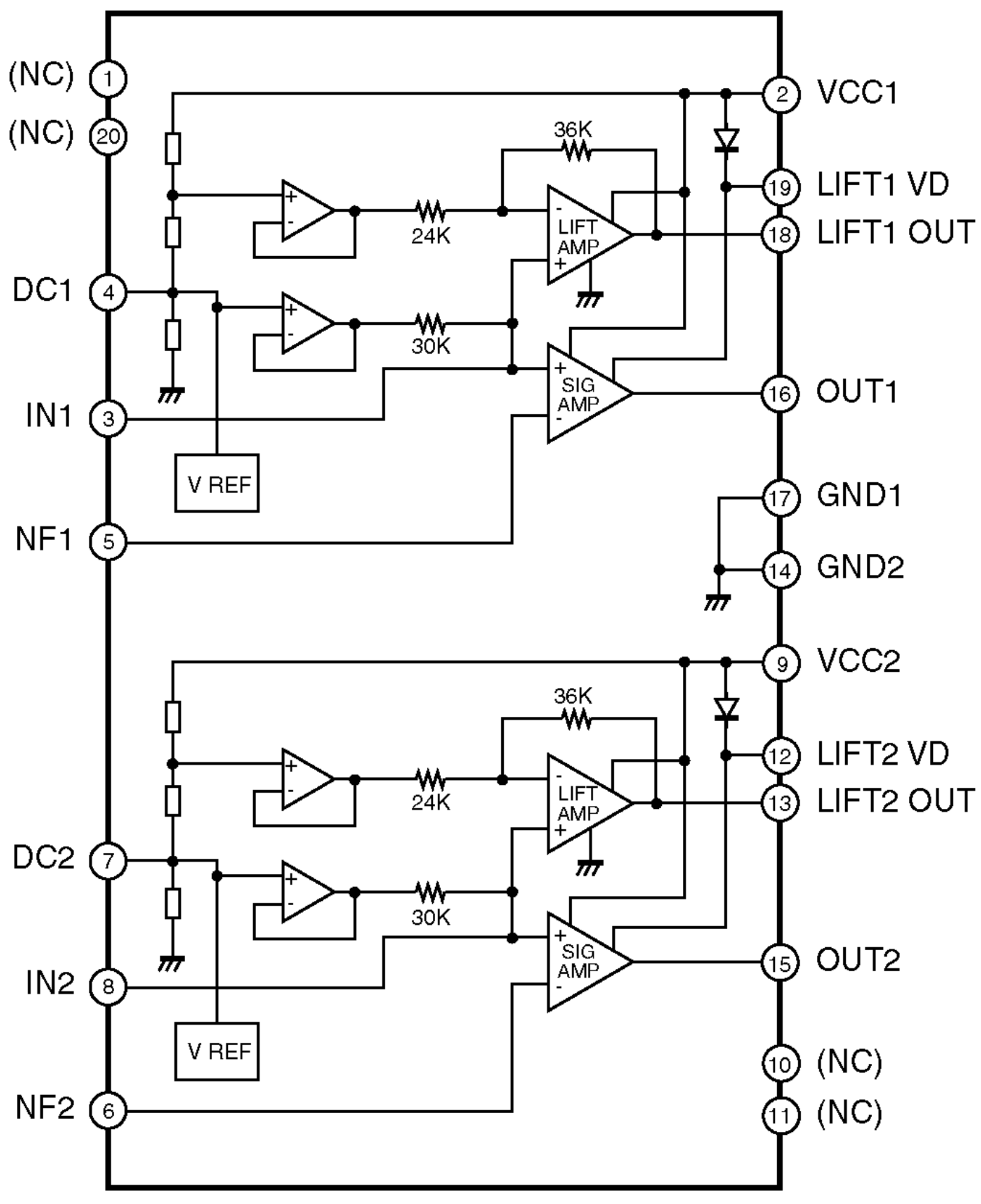
(NC) 1
(NC) 20
DC1 4
IN1 3
NF1 5
DC2 7
IN2 8
NF2 6
2 VCC1
19 LIFT1 VD
18 LIFT1 OUT
16 OUT1
17 GND1
14 GND2
9 VCC2
12 LIFT2 VD
13 LIFT2 OUT
15 OUT2
10 (NC)
11 (NC)
36K
24K
30K
LIFT AMP
SIG AMP
V REF
36K
24K
30K
LIFT AMP
SIG AMP
V REF

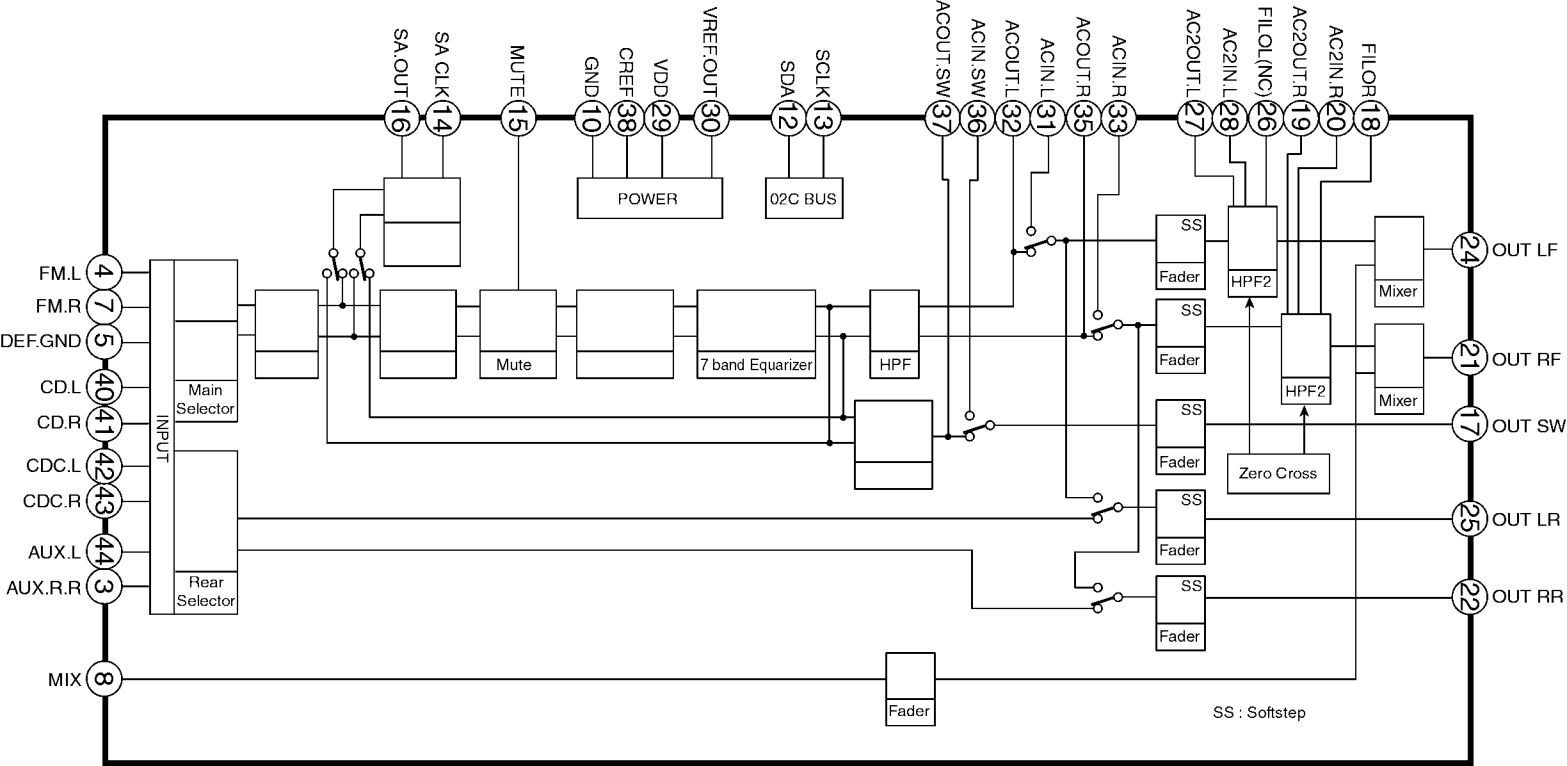
SA.OUT 16
SA CLK 14
MUTE 15
GND 10
CREF 38
VDD 29
VREF.OUT 30
SDA 12
SCLK 13
ACOUT.SW 37
ACIN.SW 36
ACOUT.L 32
ACIN.L 31
ACOUT.R 35
ACIN.R 33
AC2OUT.L 27
AC2IN.L 28
FILOL(NC) 26
AC2OUT.R 19
AC2IN.R 20
FILOR 18
POWER
02C BUS
FM.L 4
FM.R 7
DEF.GND 5
CD.L 40
CD.R 41
CDC.L 42
CDC.R 43
AUX.L 44
AUX.R.R 3
MIX 8
INPUT
Main Selector
Rear Selector
Mute
7 band Equarizer
HPF
SS
Fader
HPF2
Zero Cross
Mixer
Fader
OUT LF 24
OUT RF 21
OUT SW 17
OUT LR 25
OUT RR 22
SS : Softstep

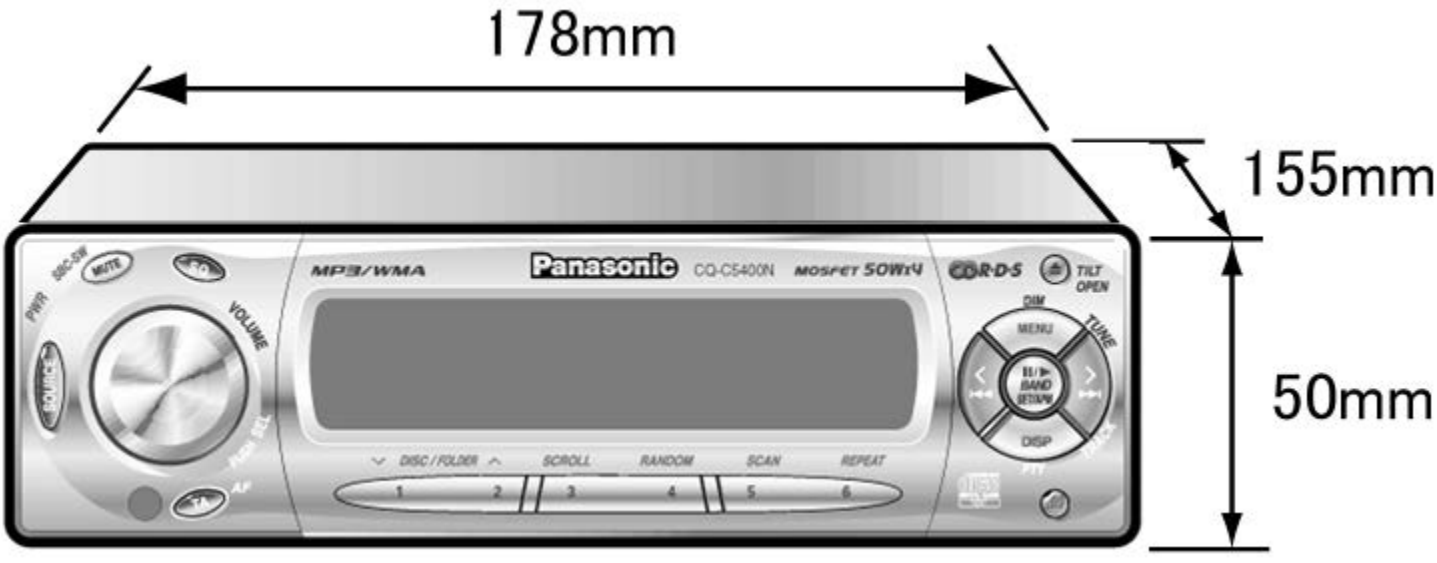
178mm
155mm
50mm
MP3/WMA
Panasonic
CQ-C5400N
MOSFET 50Wx4
CD-R·D·S
TILT OPEN
PWR
SRC-SW
MUTE
VOLUME
SOURCE
PUSH SEL
DIM
MENU
TUNE
BAND
DISP
DISC / FOLDER
SCROLL
RANDOM
SCAN
REPEAT
1
2
3
4
5
6

## ■ How to remove the Flexible PCB

1. Remove the Trim Plate.

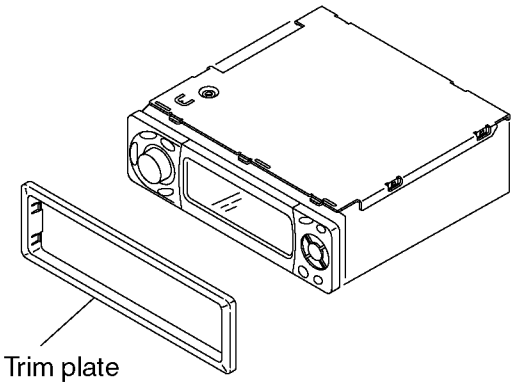


2. Remove the Removable Face Plate unit by pressing the Release Button.

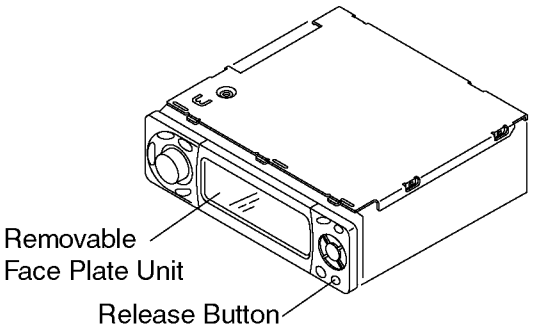


3. Remove the screw(☆) and remove the Top Cover.

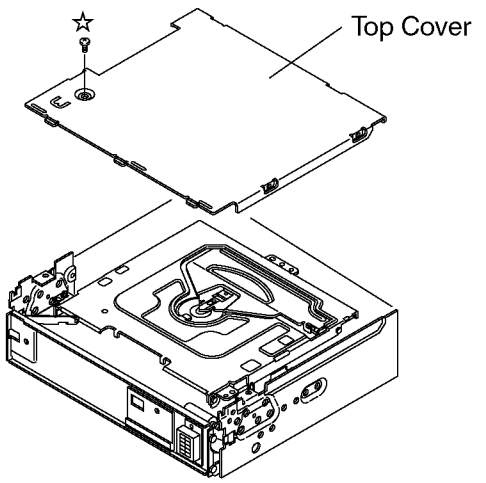


4. Remove the 3 screws(★) and remove the CD Deck.

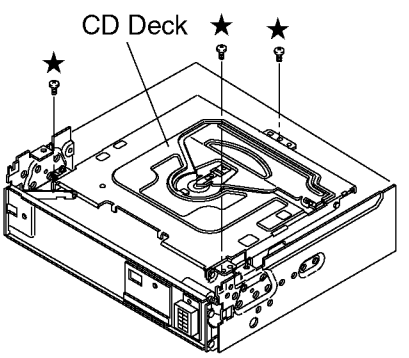


5. Remove the Flexible PCB from the CN601 (7205-02-11A).

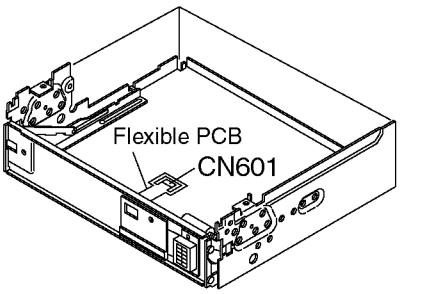


6. Remove the screw(◎) from the Drive Mechanism Ass'y and remove the Flexible PCB case.

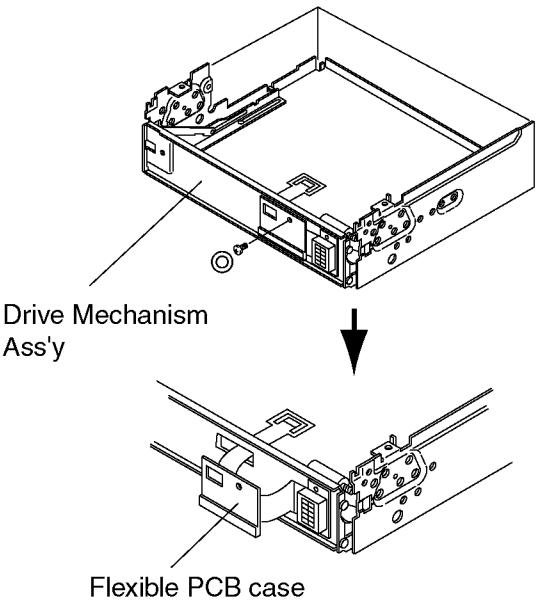


7. Remove the Flexible PCB from the Connector(16P).

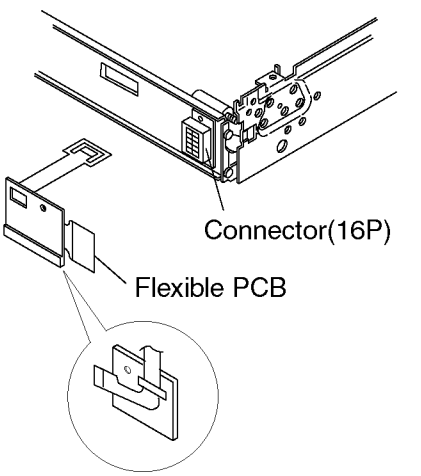

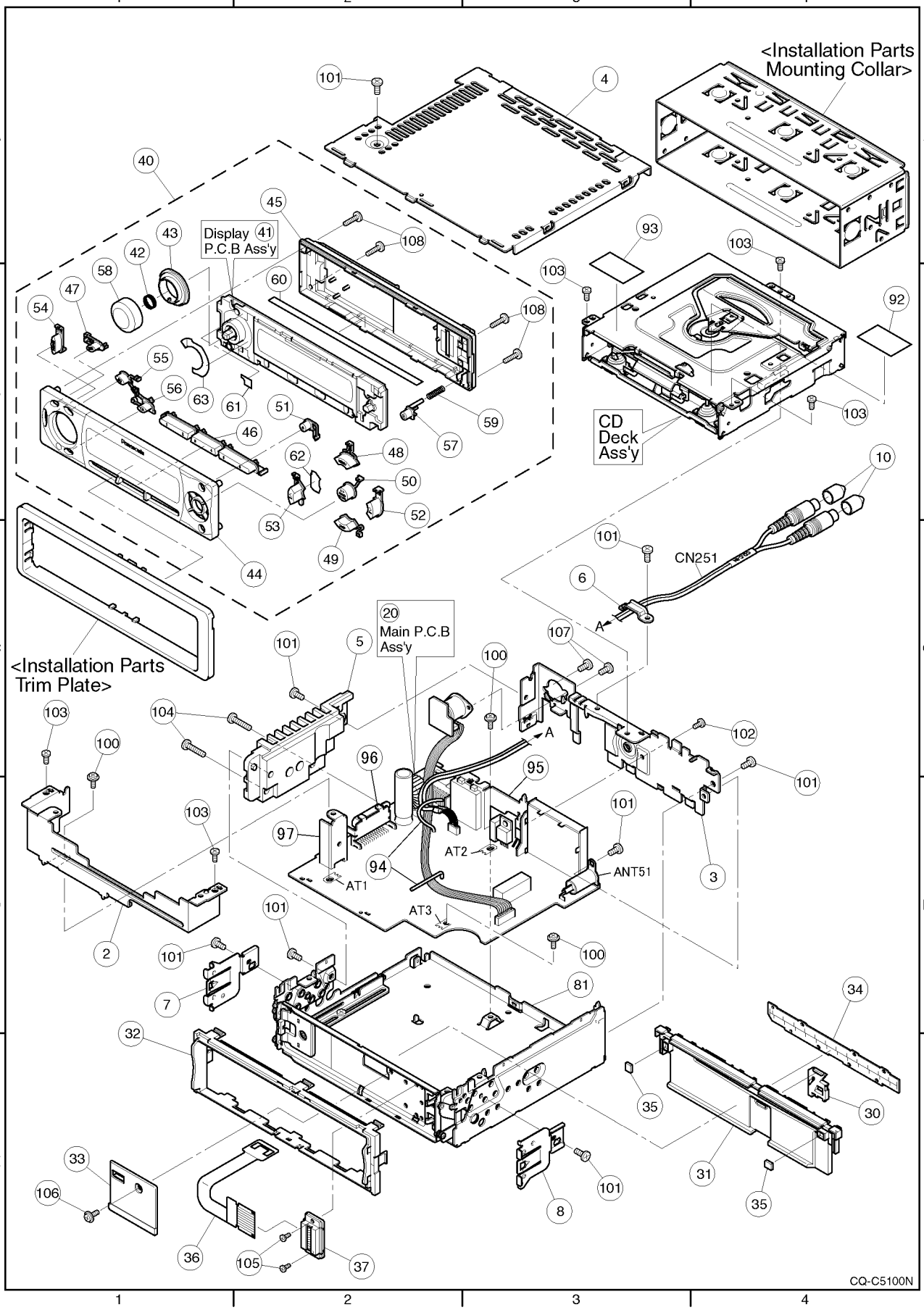
<Installation Parts Mounting Collar>
Display P.C.B Ass'y
41
CD Deck Ass'y
CN251
A
20
Main P.C.B Ass'y
<Installation Parts Trim Plate>
AT1
AT2
AT3
ANT51
CQ-C5100N

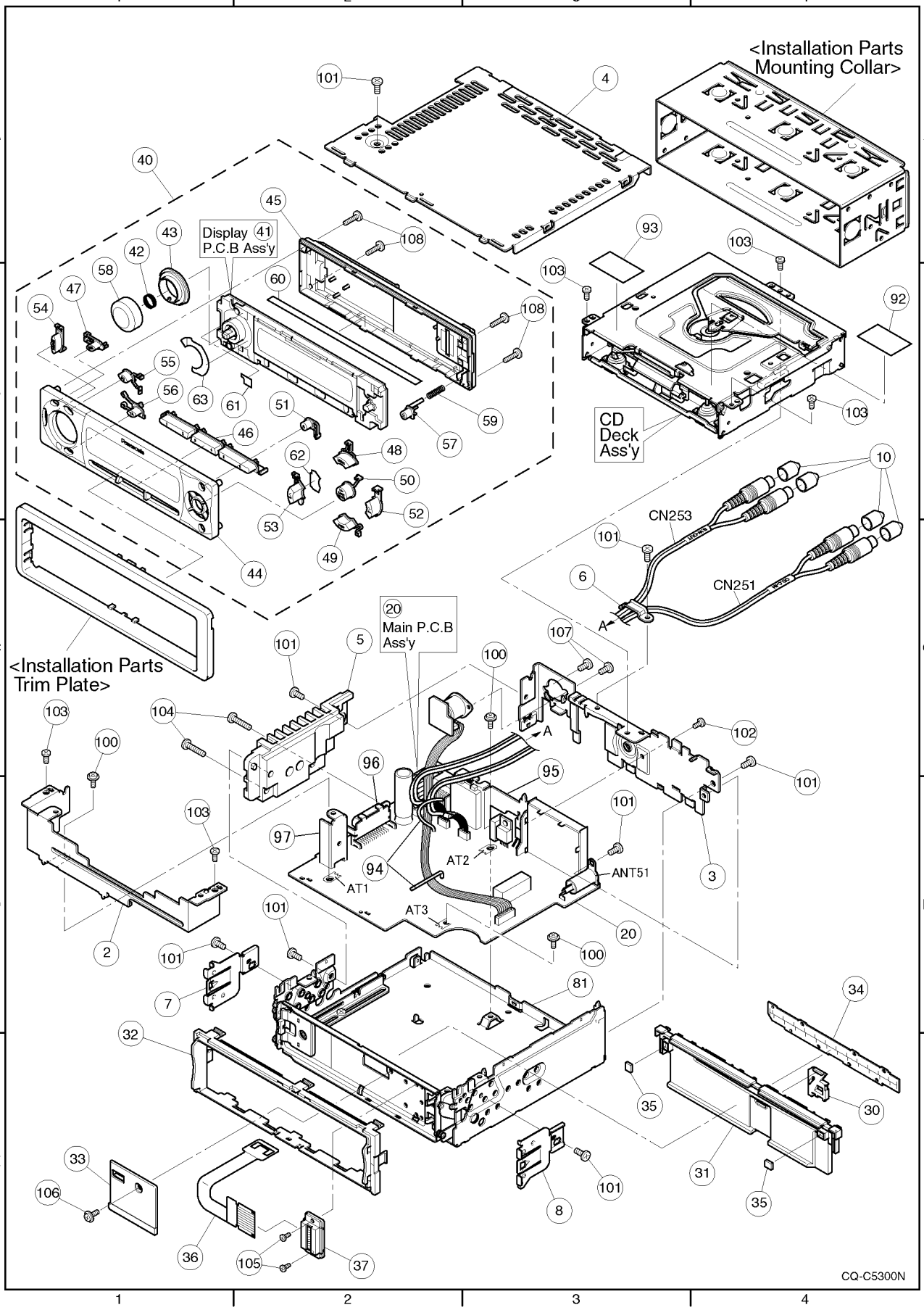
<Installation Parts Mounting Collar>
Display P.C.B Ass'y
41
CD Deck Ass'y
CN253
CN251
20
Main P.C.B Ass'y
<Installation Parts Trim Plate>
AT1
AT2
AT3
ANT51
CQ-C5300N

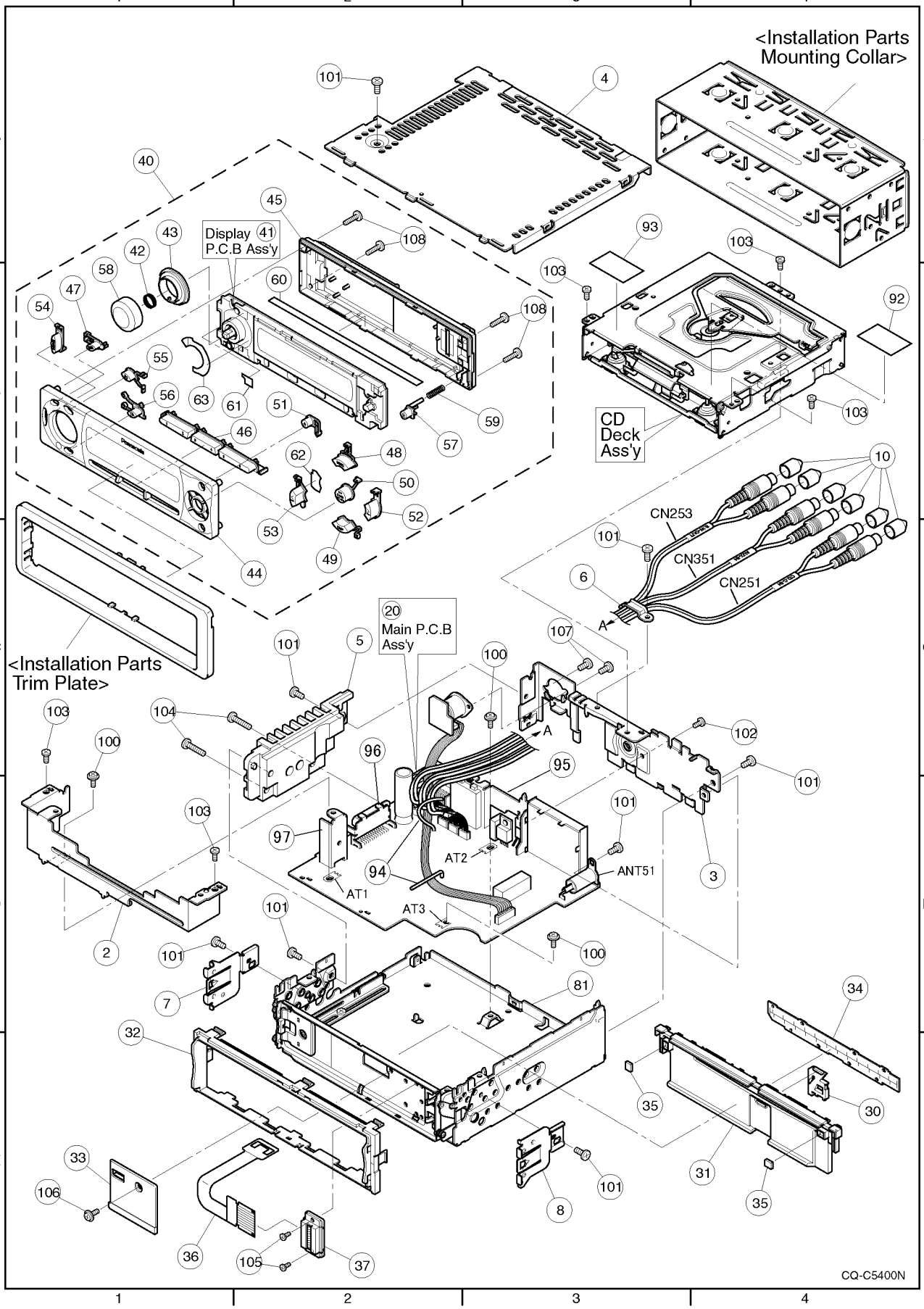
<Installation Parts Mounting Collar>
Display P.C.B Ass'y
41
CD Deck Ass'y
<Installation Parts Trim Plate>
20
Main P.C.B Ass'y
CN253
CN351
CN251
AT1
AT2
AT3
ANT51
A
CQ-C5400N

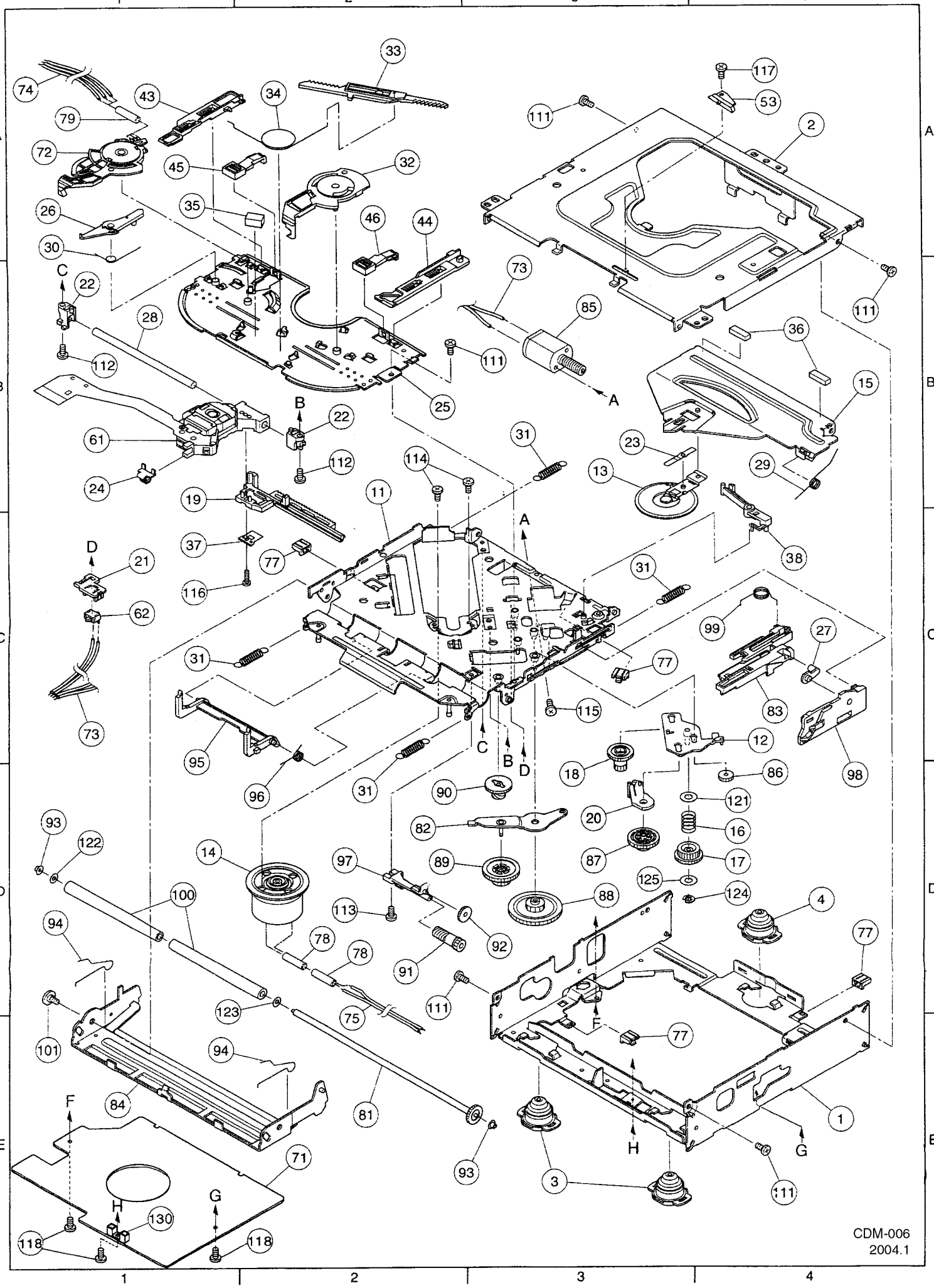
CDM-006
2004.1

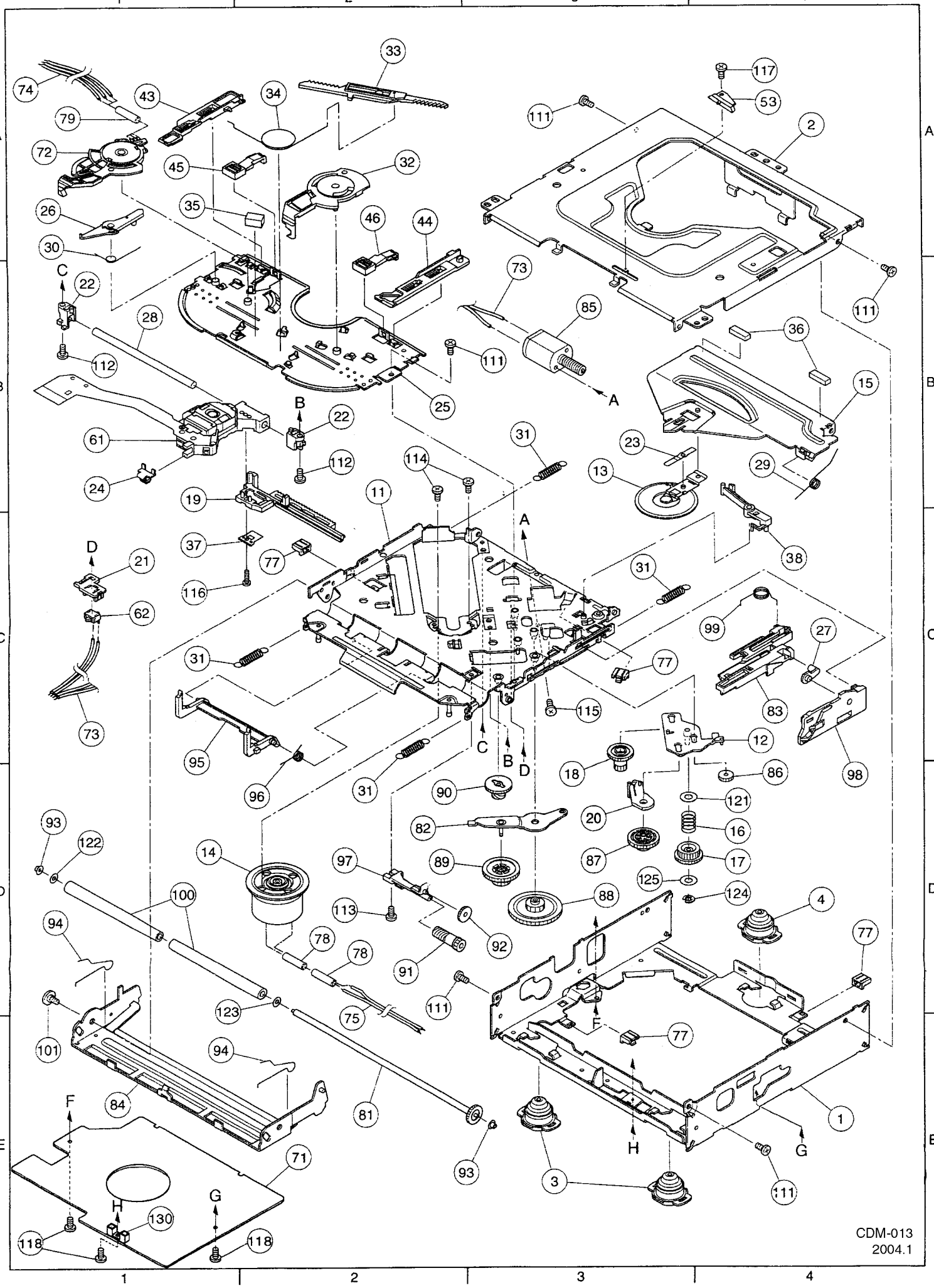
CDM-013
2004.1

● The differences among these models are mentioned below.

| Features / Model | CQ-C5400N | CQ-C5300N | CQ-C5100N |
|---|---|---|---|
| Available Audio Format* | CD-DA/MP3/WMA | CD-DA/MP3/WMA | CD-DA |
| Body/Trim Plate Colour | Coating Silver | Plating Black | Plating Black |
| CD-text | Supported | Supported | Not supported |
| Subwoofer output | Supported (5 V) | Supported (2.5 V) | Not supported |
| AUX | Supported | Not supported | Not supported |
| Remote Control Unit | Supplied | Option | Option |

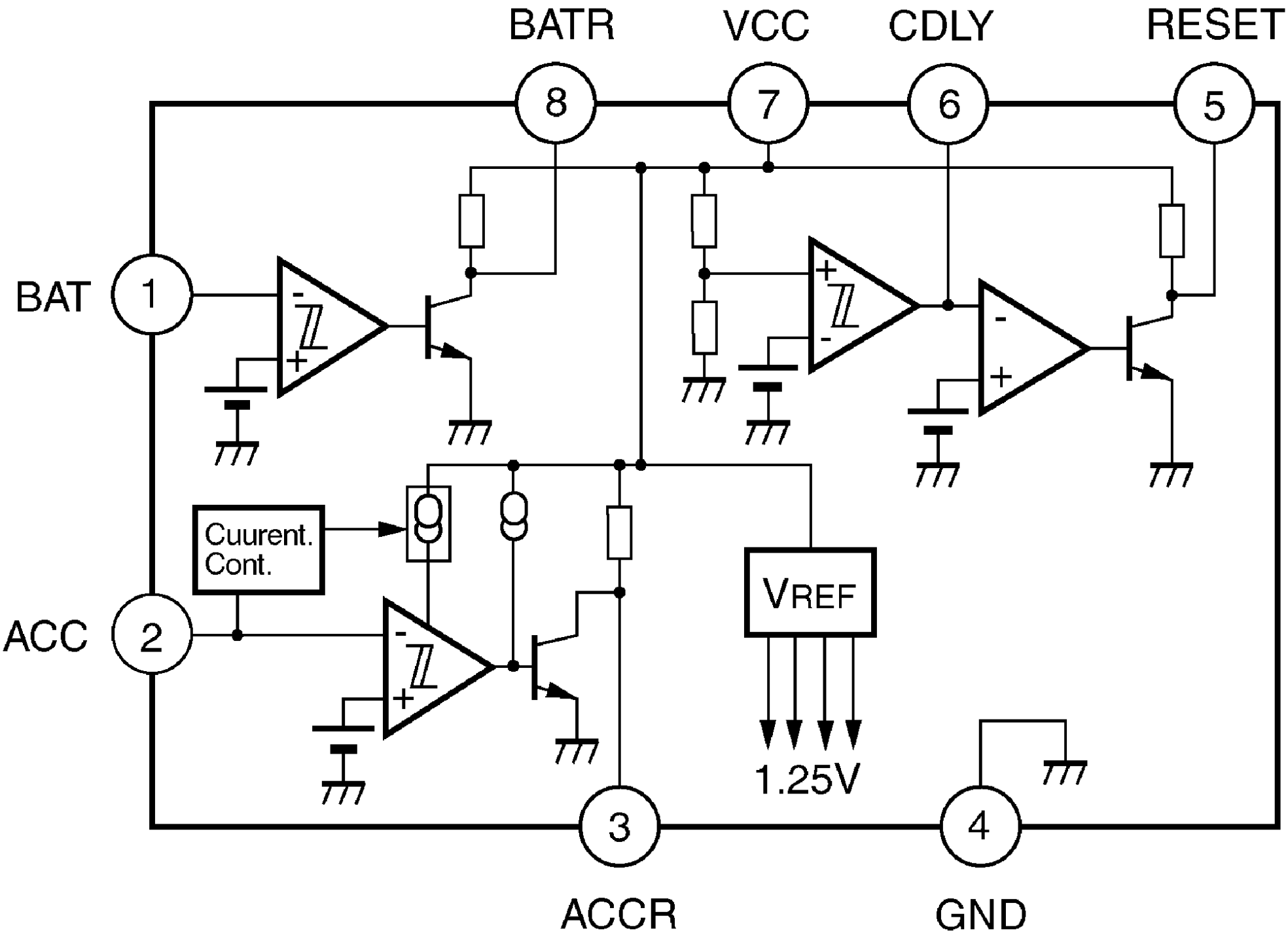
BATR
VCC
CDLY
RESET
8
7
6
5
BAT
1
Cuurent.
Cont.
ACC
2
VREF
1.25V
3
4
ACCR
GND

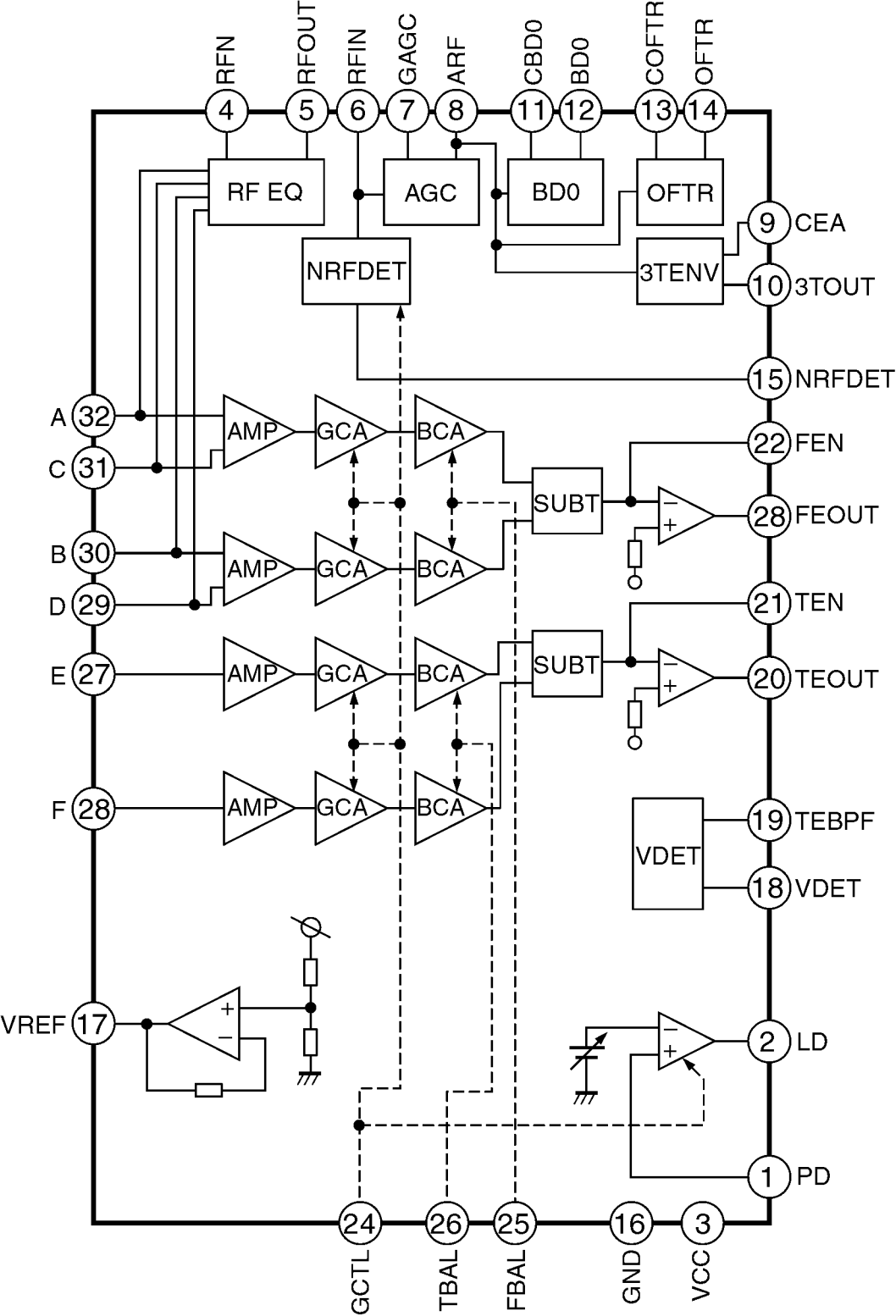
RFN
RFOUT
RFIN
GAGC
ARF
CBD0
BD0
COFTR
OFTR
4
5
6
7
8
11
12
13
14
RF EQ
AGC
BD0
OFTR
NRFDET
3TENV
9 CEA
10 3TOUT
15 NRFDET
A 32
C 31
B 30
D 29
E 27
F 28
AMP
GCA
BCA
SUBT
22 FEN
28 FEOUT
21 TEN
20 TEOUT
VDET
19 TEBPF
18 VDET
VREF 17
2 LD
1 PD
24
26
25
16
3
GCTL
TBAL
FBAL
GND
VCC

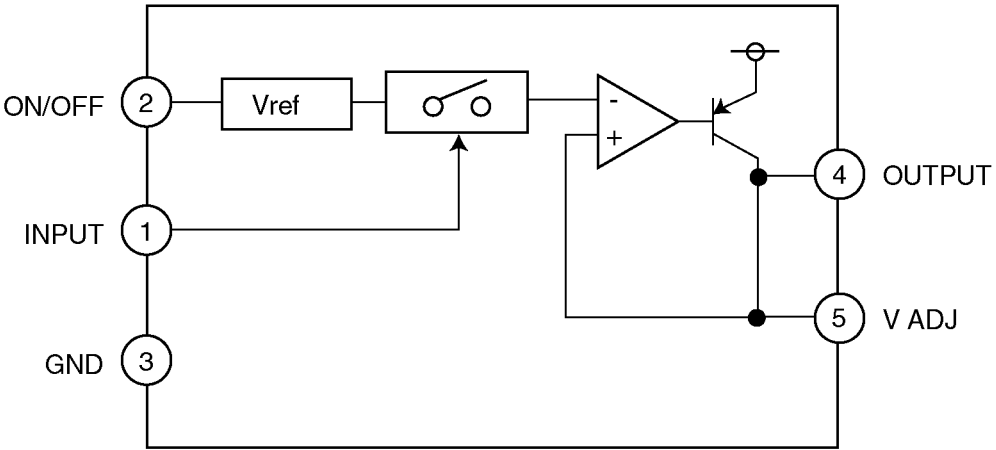
ON/OFF
2
Vref
INPUT
1
GND
3
-
+
4
OUTPUT
5
V ADJ

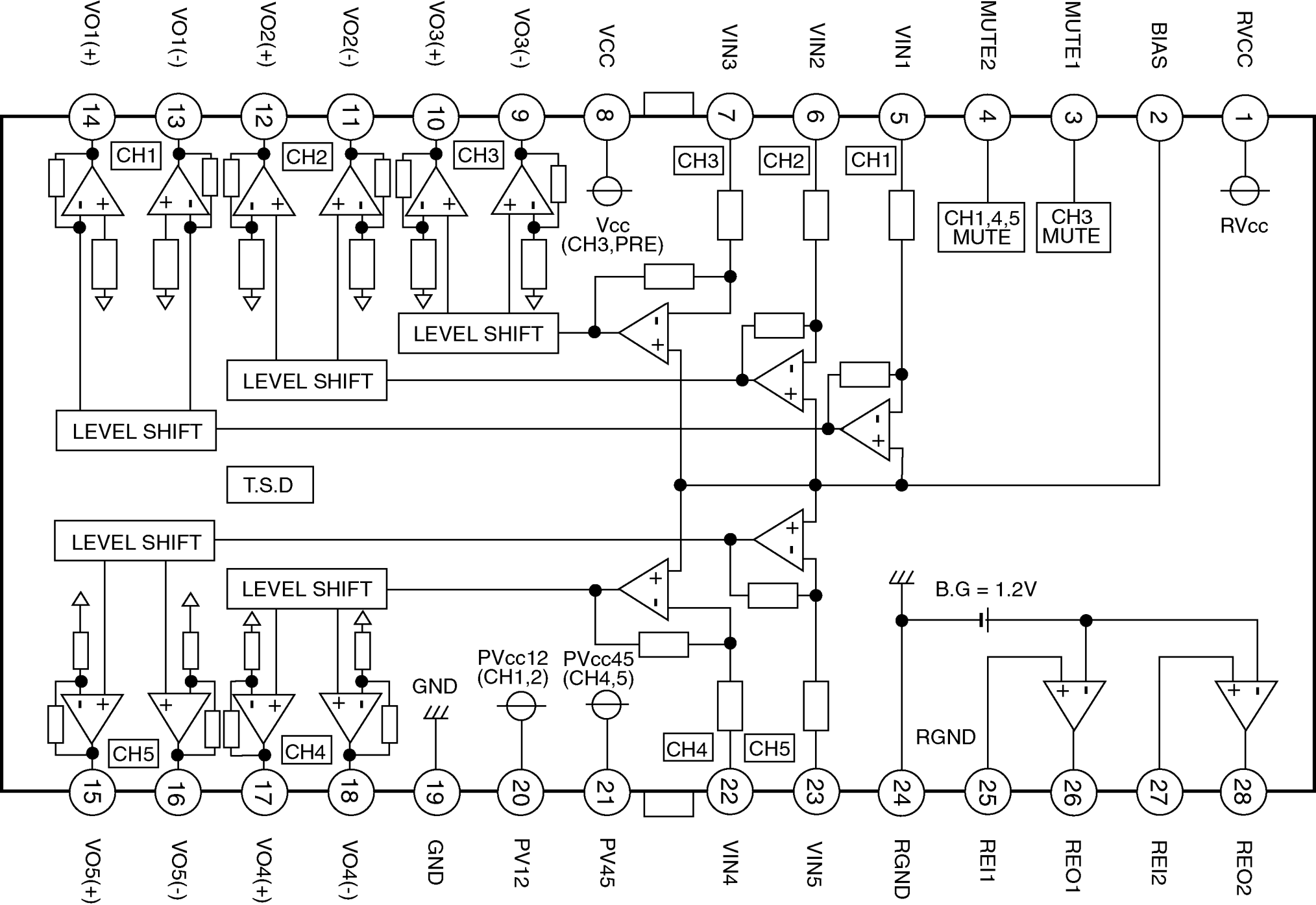
VO1(+)
VO1(-)
VO2(+)
VO2(-)
VO3(+)
VO3(-)
VCC
VIN3
VIN2
VIN1
MUTE2
MUTE1
BIAS
RVCC
14
13
12
11
10
9
8
7
6
5
4
3
2
1
CH1
CH2
CH3
CH3
CH2
CH1
Vcc
(CH3,PRE)
CH1,4,5
MUTE
CH3
MUTE
RVcc
LEVEL SHIFT
LEVEL SHIFT
LEVEL SHIFT
T.S.D
LEVEL SHIFT
LEVEL SHIFT
B.G = 1.2V
PVcc12
(CH1,2)
PVcc45
(CH4,5)
GND
CH5
CH4
CH4
CH5
RGND
15
16
17
18
19
20
21
22
23
24
25
26
27
28
VO5(+)
VO5(-)
VO4(+)
VO4(-)
GND
PV12
PV45
VIN4
VIN5
RGND
REI1
REO1
REI2
REO2

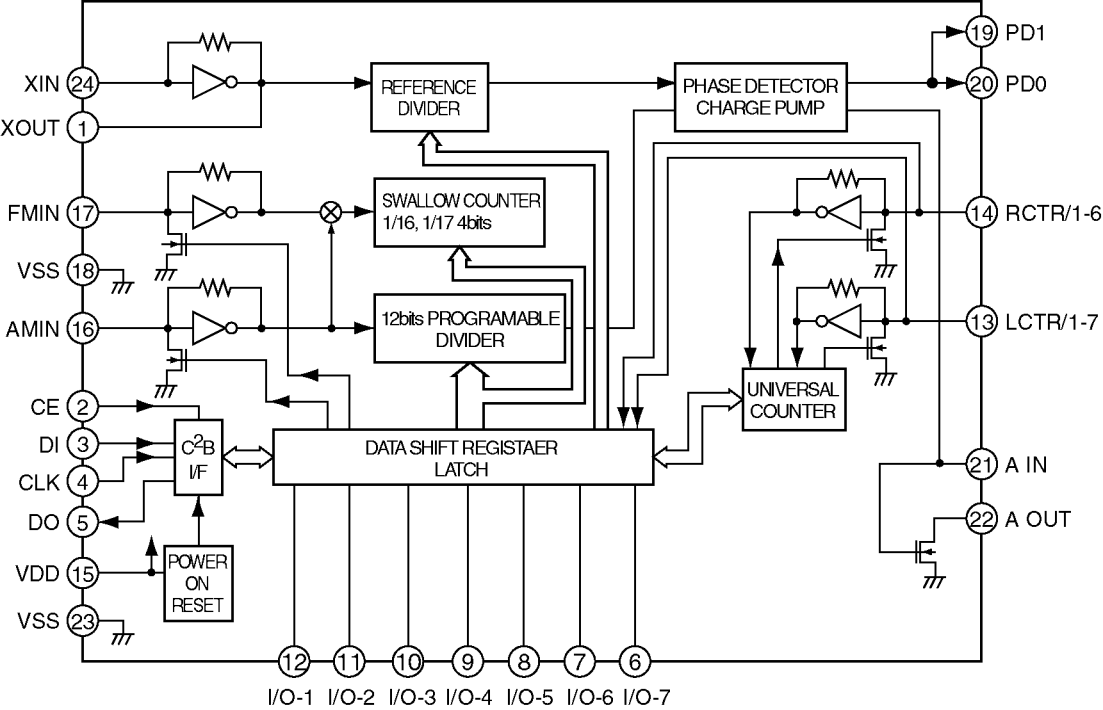
XIN
24
XOUT
1
FMIN
17
VSS
18
AMIN
16
CE
2
DI
3
CLK
4
DO
5
VDD
15
VSS
23
REFERENCE DIVIDER
PHASE DETECTOR CHARGE PUMP
SWALLOW COUNTER 1/16, 1/17 4bits
12bits PROGRAMABLE DIVIDER
C2B I/F
DATA SHIFT REGISTAER LATCH
POWER ON RESET
UNIVERSAL COUNTER
19
PD1
20
PD0
14
RCTR/1-6
13
LCTR/1-7
21
A IN
22
A OUT
12
11
10
9
8
7
6
I/O-1
I/O-2
I/O-3
I/O-4
I/O-5
I/O-6
I/O-7

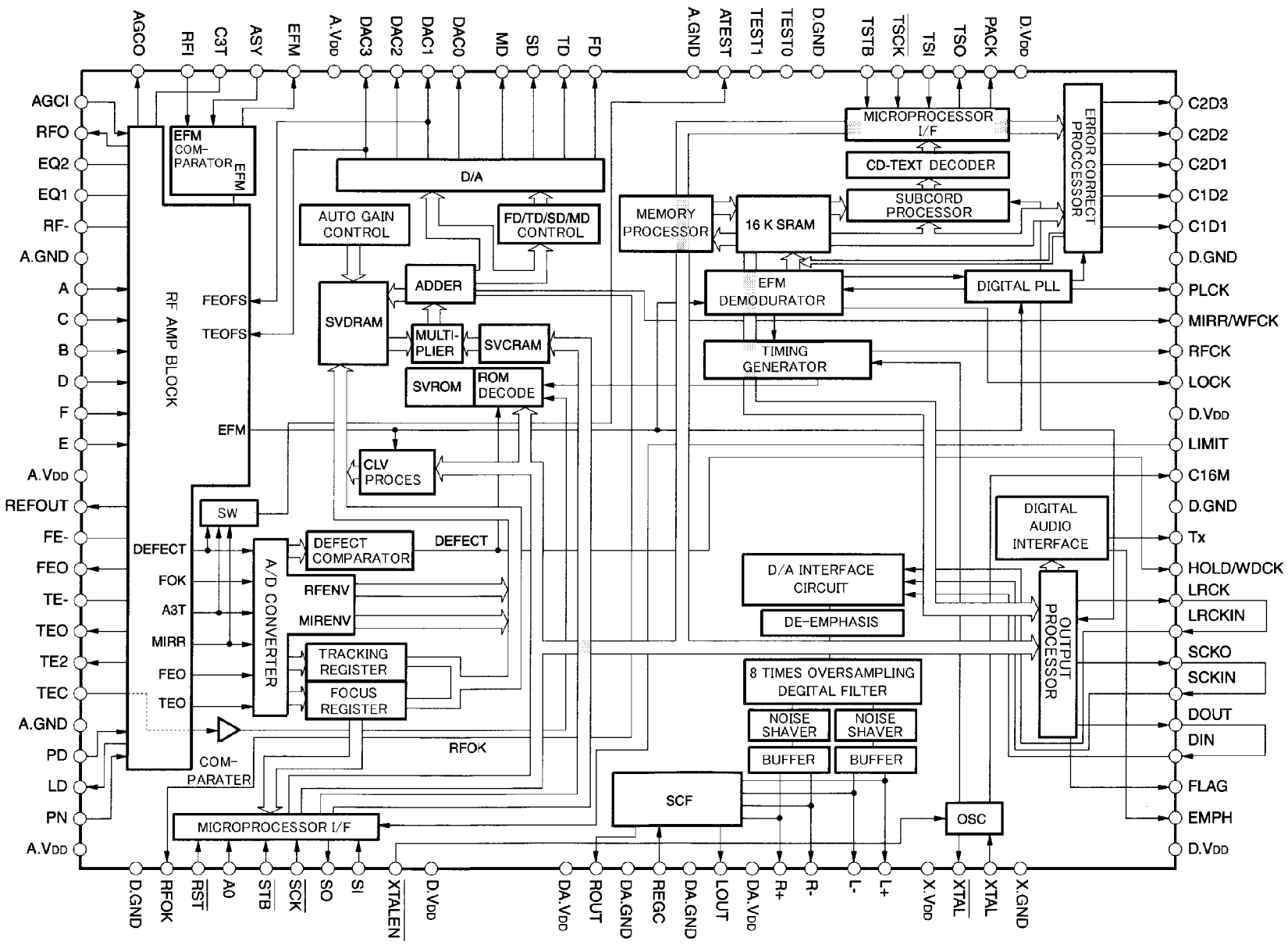
AGCO
RFI
C3T
ASY
EFM
A.VDD
DAC3
DAC2
DAC1
DAC0
MD
SD
TD
FD
A.GND
ATEST
TEST1
TEST0
D.GND
TSTB
TSCK
TSI
TSO
PACK
D.VDD
AGCI
RFO
EQ2
EQ1
RF-
A.GND
A
C
B
D
F
E
A.VDD
REFOUT
FE-
FEO
TE-
TEO
TE2
TEC
A.GND
PD
LD
PN
A.VDD
C2D3
C2D2
C2D1
C1D2
C1D1
D.GND
PLCK
MIRR/WFCK
RFCK
LOCK
D.VDD
LIMIT
C16M
D.GND
Tx
HOLD/WDCK
LRCK
LRCKIN
SCKO
SCKIN
DOUT
DIN
FLAG
EMPH
D.VDD
EFM COM-PARATOR
EFM
RF AMP BLOCK
FEOFS
TEOFS
EFM
D/A
AUTO GAIN CONTROL
FD/TD/SD/MD CONTROL
ADDER
SVDRAM
MULTI-PLIER
SVCRAM
SVROM
ROM DECODE
CLV PROCES
SW
DEFECT
FOK
A3T
MIRR
FEO
TEO
A/D CONVERTER
DEFECT COMPARATOR
DEFECT
RFENV
MIRENV
TRACKING REGISTER
FOCUS REGISTER
RFOK
COM-PARATER
MICROPROCESSOR I/F
MEMORY PROCESSOR
16 K SRAM
MICROPROCESSOR I/F
CD-TEXT DECODER
SUBCORD PROCESSOR
ERROR CORRECT PROCESSOR
EFM DEMODURATOR
DIGITAL PLL
TIMING GENERATOR
DIGITAL AUDIO INTERFACE
D/A INTERFACE CIRCUIT
DE-EMPHASIS
OUTPUT PROCESSOR
8 TIMES OVERSAMPLING DEGITAL FILTER
NOISE SHAVER
NOISE SHAVER
BUFFER
BUFFER
SCF
OSC
D.GND
RFOK
RST
A0
STB
SCK
SO
SI
XTALEN
D.VDD
DA.VDD
ROUT
DA.GND
REGC
DA.GND
LOUT
DA.VDD
R+
R-
L-
L+
X.VDD
XTAL
XTAL
X.GND

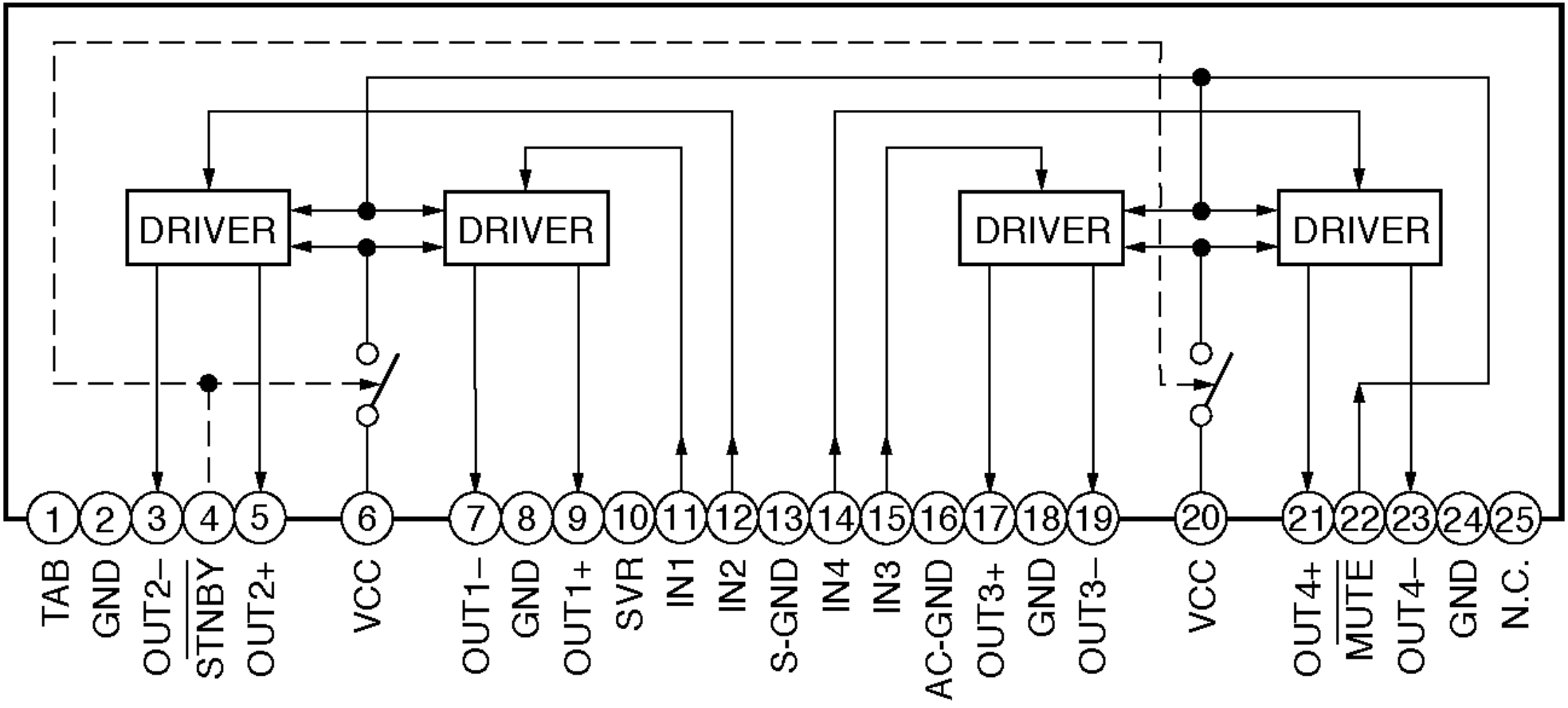
DRIVER
DRIVER
DRIVER
DRIVER
1 TAB
2 GND
3 OUT2–
4 STNBY
5 OUT2+
6 VCC
7 OUT1–
8 GND
9 OUT1+
10 SVR
11 IN1
12 IN2
13 S-GND
14 IN4
15 IN3
16 AC-GND
17 OUT3+
18 GND
19 OUT3–
20 VCC
21 OUT4+
22 MUTE
23 OUT4–
24 GND
25 N.C.

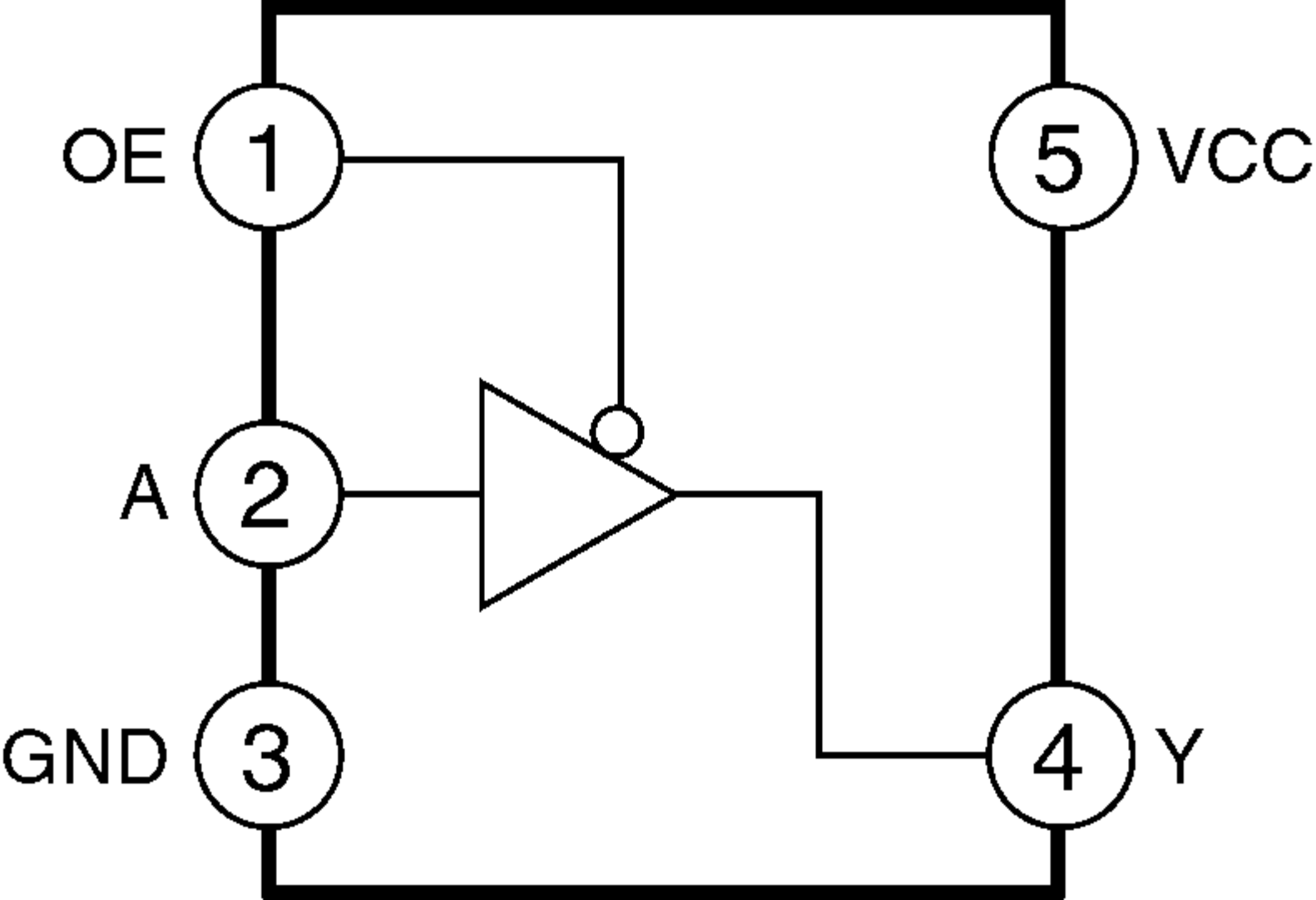
OE
1
A
2
GND
3
5
VCC
4
Y

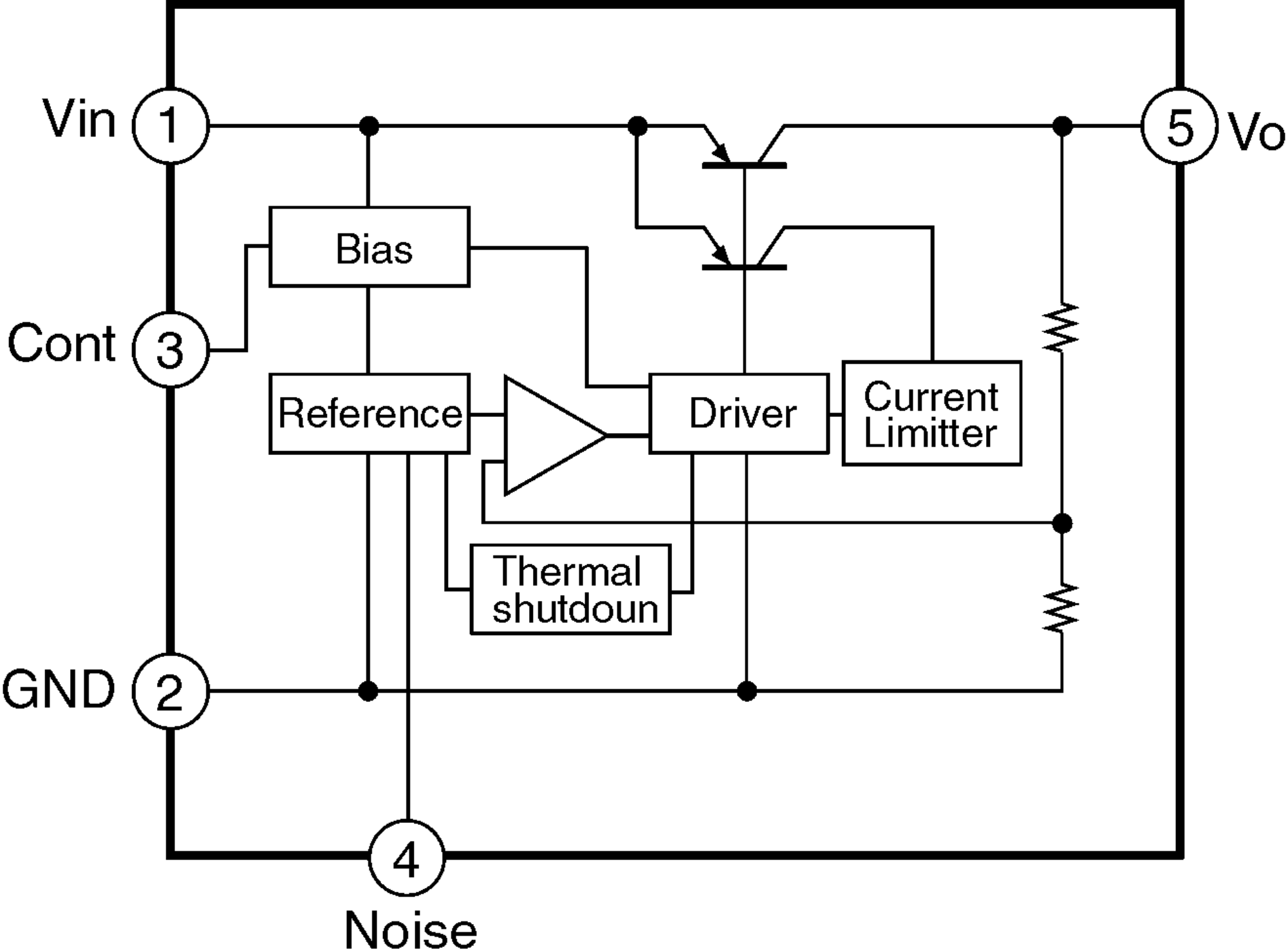
Vin
1
Cont
3
GND
2
4
Noise
5
Vo
Bias
Reference
Driver
Current
Limitter
Thermal
shutdoun

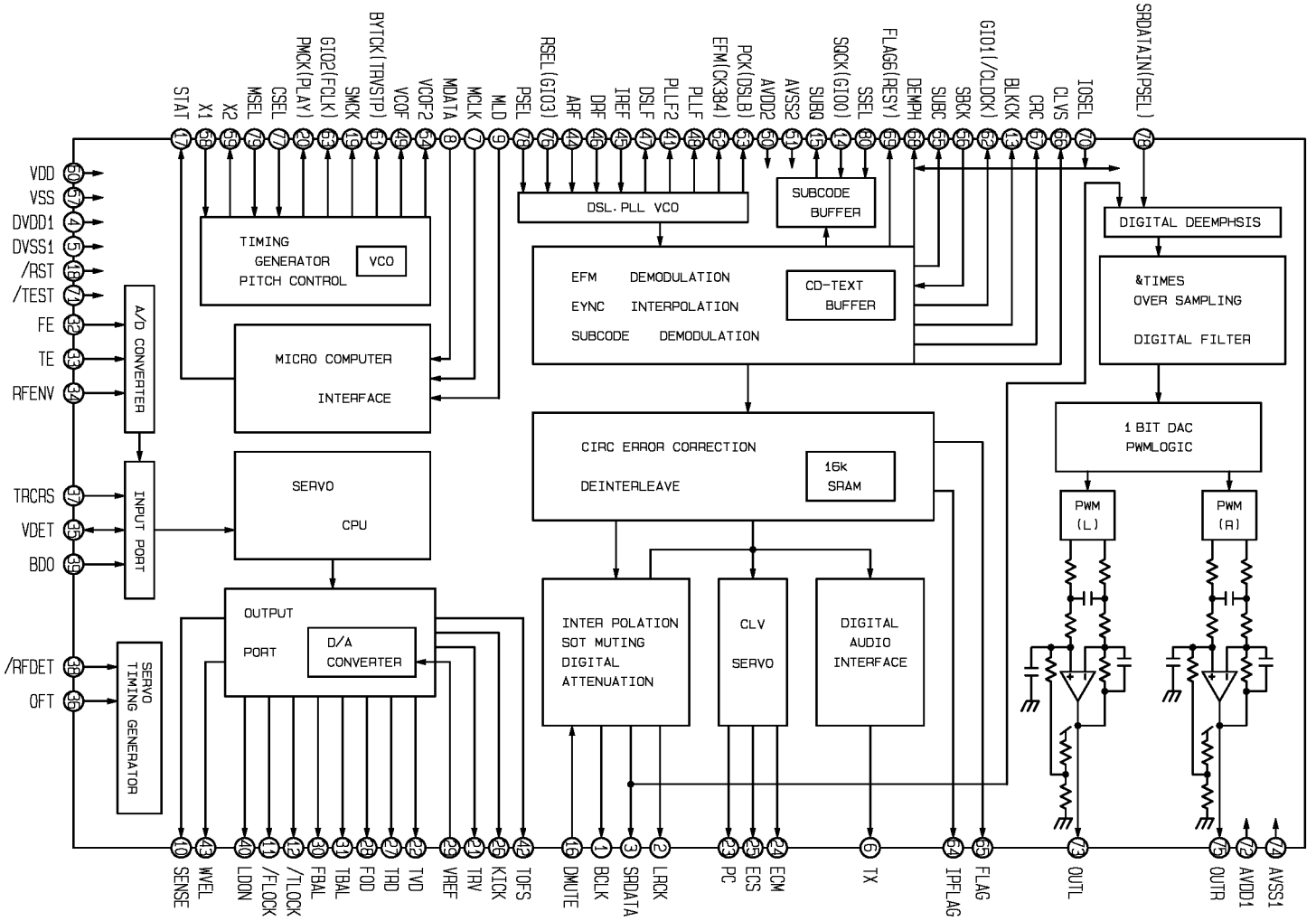
STAT 77
X1 28
X2 29
MSEL 78
CSEL 77
PMCK(PLAY) 20
GIO2(FCLK) 21
SMCK 19
BYTCK(TRVSTP) 31
VCOF 45
VCOF2 44
MDATA 8
MCLK 7
MLD 9
PSEL 78
RSEL(GIO3) 76
ARF 14
DRF 46
IREF 45
DSLF 47
PLLF2 41
PLLF 48
EFM(CK384) 42
PCK(DSLB) 43
AVDD2 30
AVSS2 31
SUBQ 15
SQCK(GIO0) 17
SSEL 80
FLAG6(RESY) 59
DEMPH 58
SUBC 55
SBCK 56
BLKCK 13
CRC 57
CLVS 58
IOSEL 10
SRDATAIN(PSEL) 78
VDD 30
VSS 31
DVDD1 4
DVSS1 5
/RST 16
/TEST 17
FE 32
TE 33
RFENV 34
TRCRS 37
VDET 35
BDO 36
/RFDET 38
OFT 39
TIMING GENERATOR PITCH CONTROL
VCO
DSL. PLL VCO
SUBCODE BUFFER
DIGITAL DEEMPHSIS
EFM DEMODULATION
EYNC INTERPOLATION
SUBCODE DEMODULATION
CD-TEXT BUFFER
&TIMES OVER SAMPLING
DIGITAL FILTER
A/D CONVERTER
MICRO COMPUTER
INTERFACE
CIRC ERROR CORRECTION
DEINTERLEAVE
16k SRAM
1 BIT DAC PWMLOGIC
PWM (L)
PWM (R)
INPUT PORT
SERVO
CPU
OUTPUT PORT
D/A CONVERTER
INTER POLATION SOT MUTING DIGITAL ATTENUATION
CLV SERVO
DIGITAL AUDIO INTERFACE
SERVO TIMING GENERATOR
SENSE 10
WVEL 13
LDON 40
/FLOCK 11
/TLOCK 12
FBAL 30
TBAL 31
FOD 28
TRD 27
TVD 22
VREF 26
TRV 23
KICK 25
TOFS 42
DMUTE 16
BCLK 1
SRDATA 3
LRCK 2
PC 23
ECS 25
ECM 24
TX 6
IPFLAG 64
FLAG 65
OUTL 73
OUTR 75
AVDD1 72
AVSS1 74

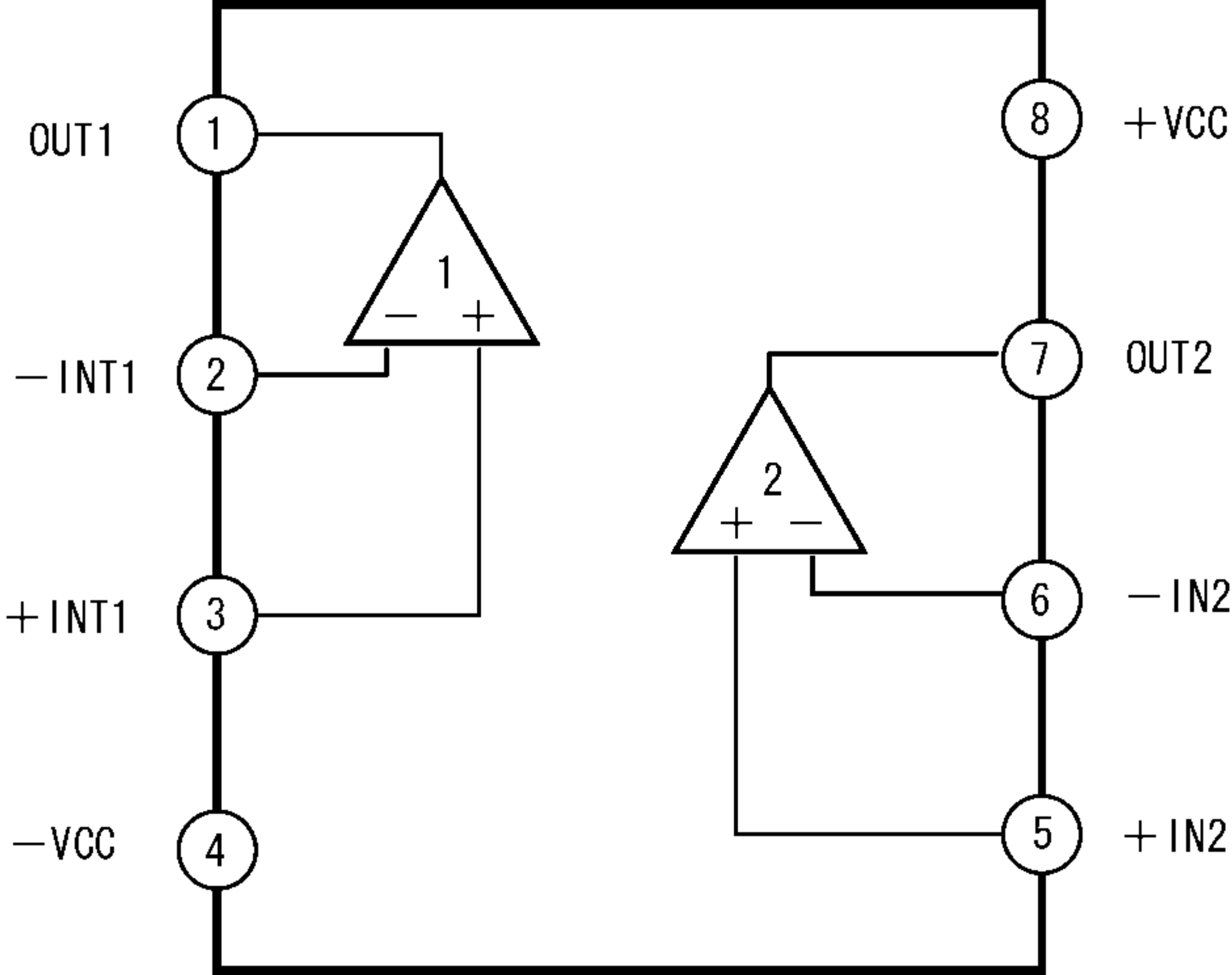
OUT1
1
−INT1
2
+INT1
3
−VCC
4
8
+VCC
7
OUT2
6
−IN2
5
+IN2
1
−
+
2
+
−

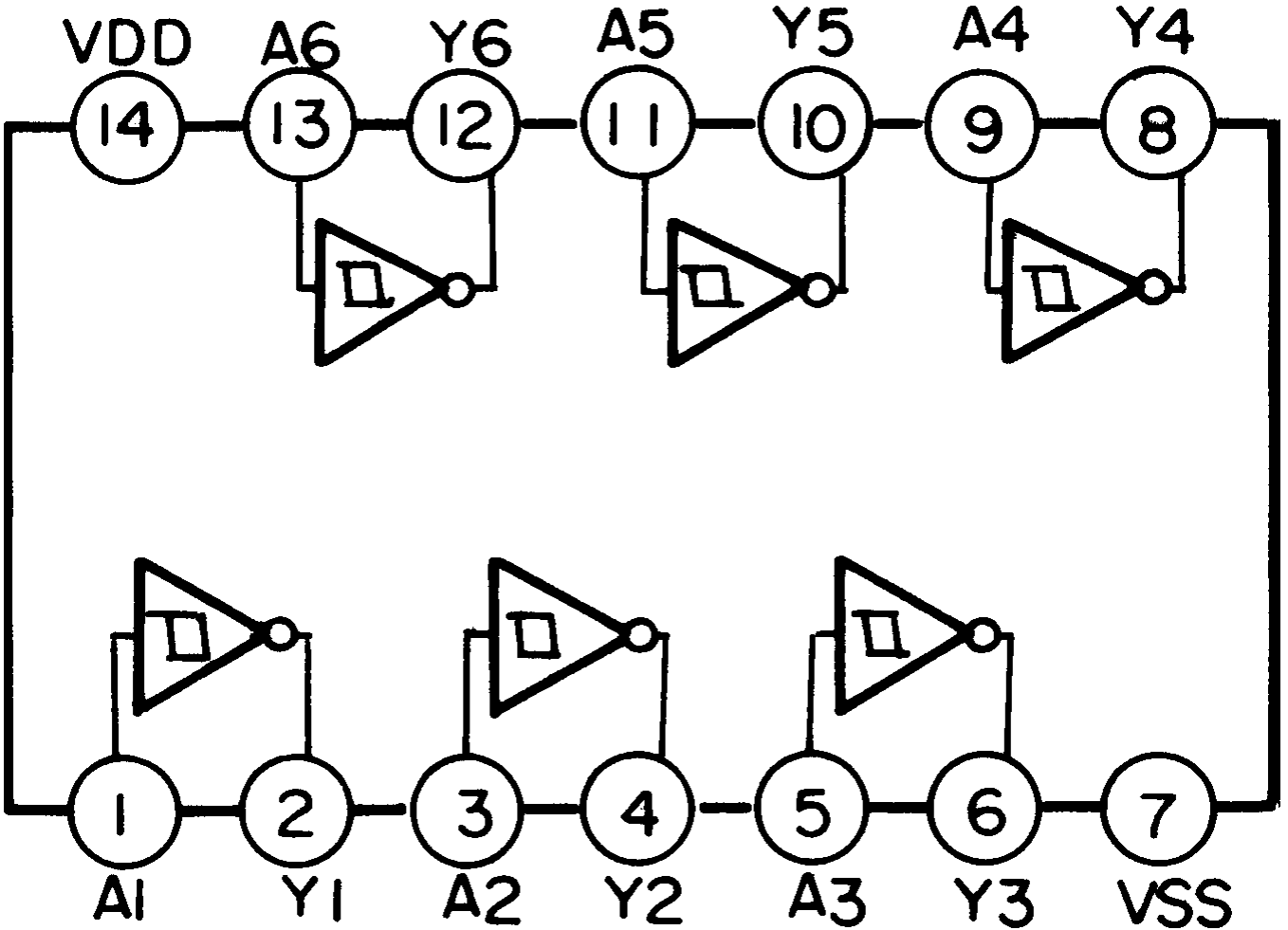
VDD
A6
Y6
A5
Y5
A4
Y4
14
13
12
11
10
9
8
1
2
3
4
5
6
7
A1
Y1
A2
Y2
A3
Y3
VSS

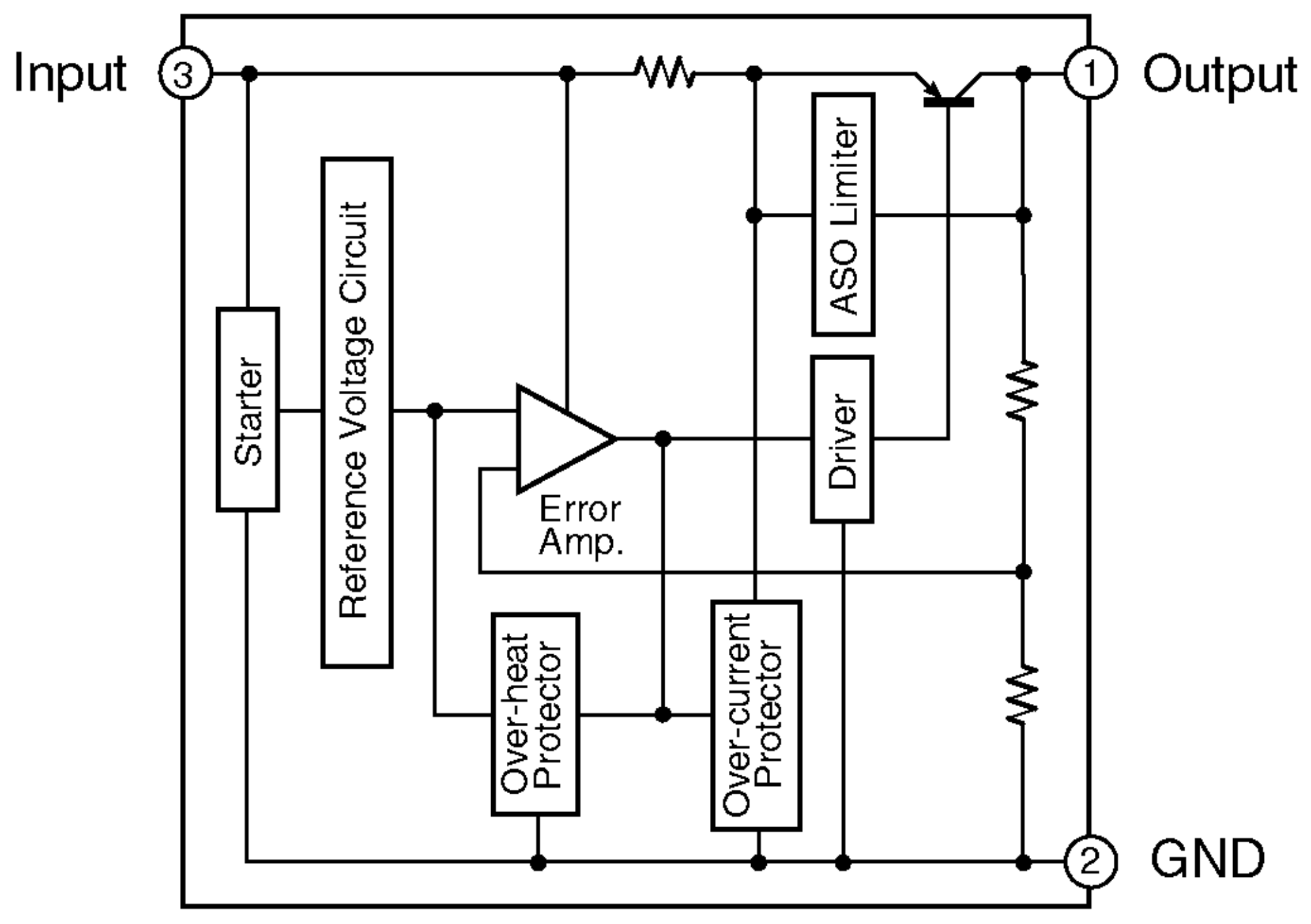
Input
3
1
Output
Starter
Reference Voltage Circuit
Error
Amp.
ASO Limiter
Driver
Over-heat
Protector
Over-current
Protector
2
GND

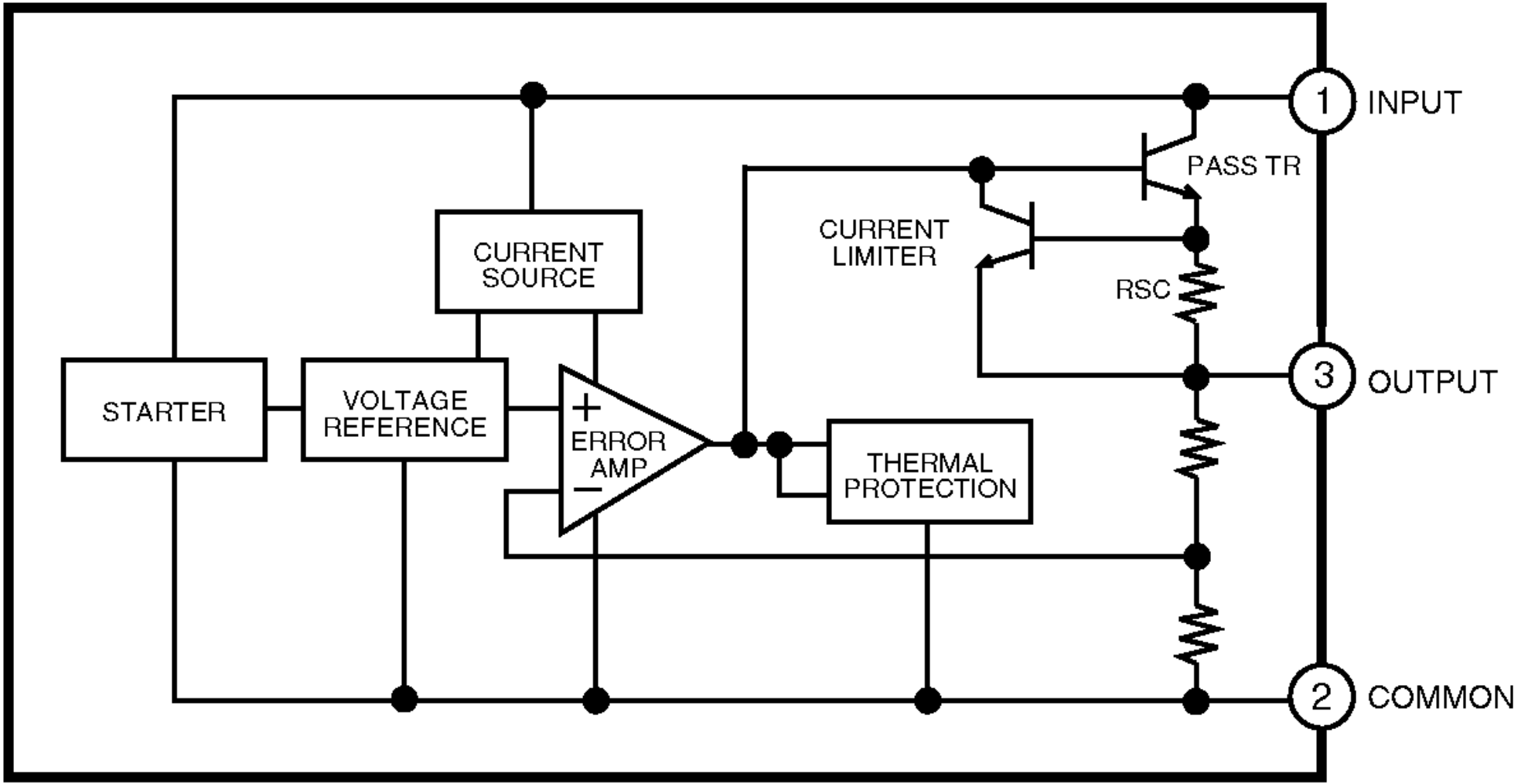
1
INPUT
PASS TR
CURRENT
LIMITER
CURRENT
SOURCE
RSC
3
OUTPUT
STARTER
VOLTAGE
REFERENCE
+
ERROR
AMP
−
THERMAL
PROTECTION
2
COMMON

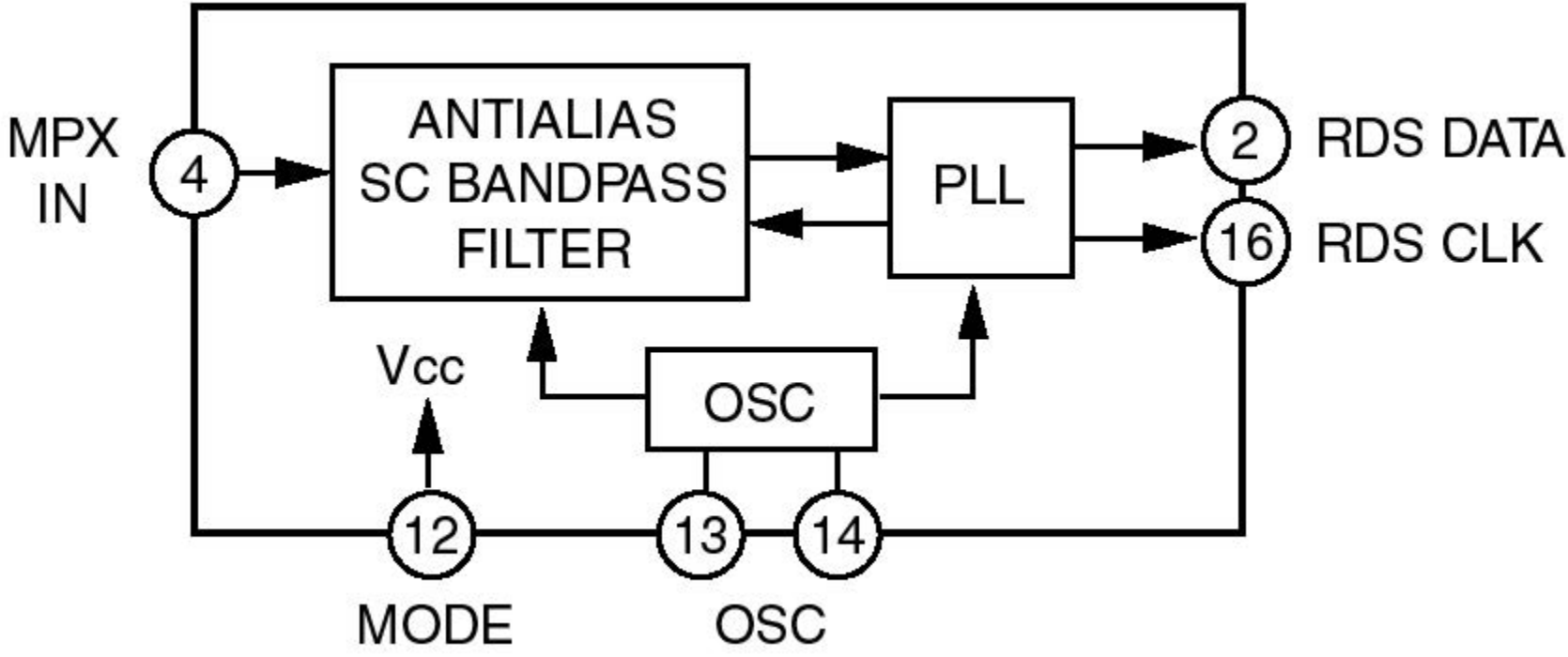
MPX
IN
4
ANTIALIAS
SC BANDPASS
FILTER
PLL
2
RDS DATA
16
RDS CLK
Vcc
OSC
12
13
14
MODE
OSC

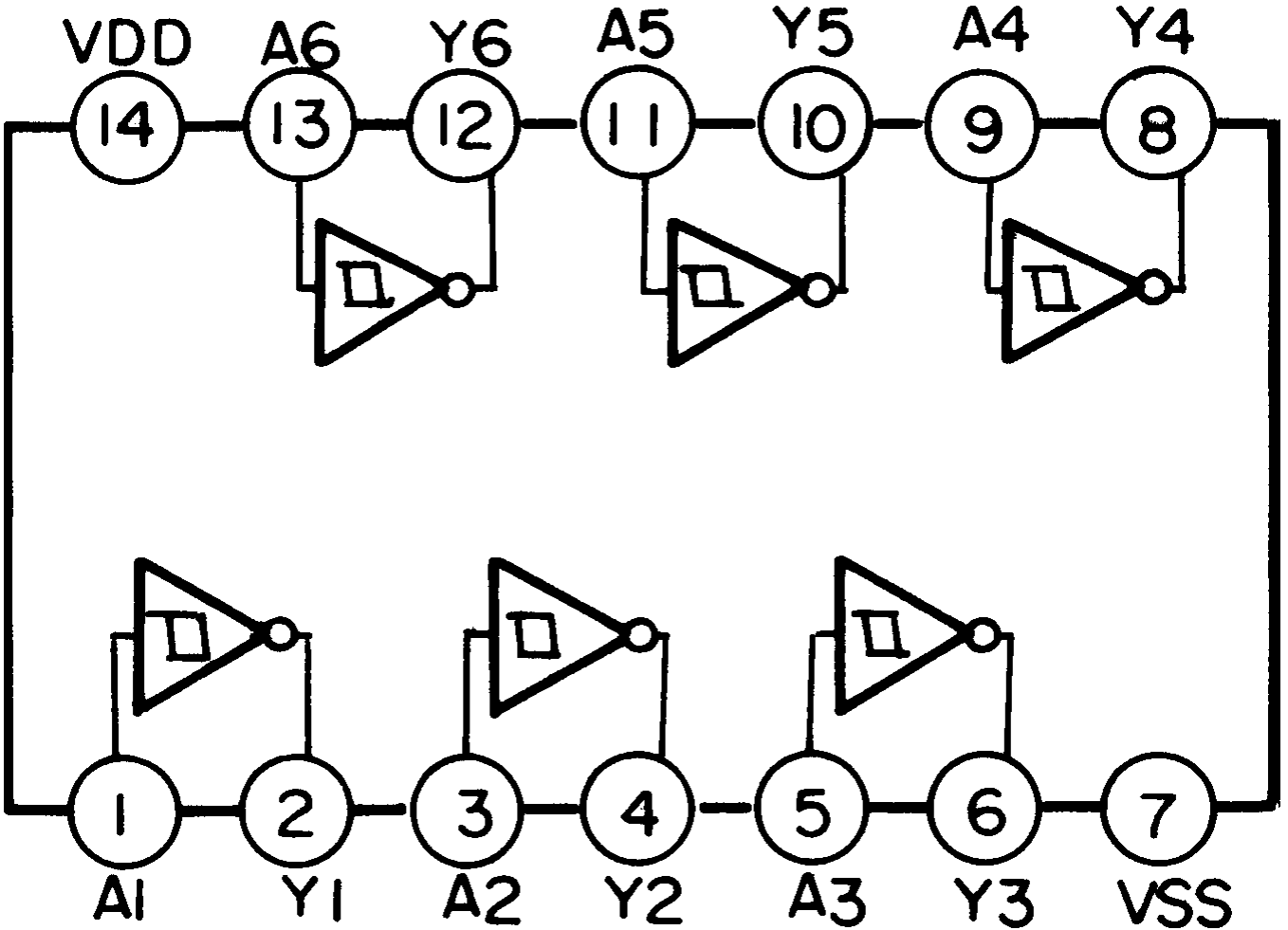
VDD
A6
Y6
A5
Y5
A4
Y4
14
13
12
11
10
9
8
1
2
3
4
5
6
7
A1
Y1
A2
Y2
A3
Y3
VSS

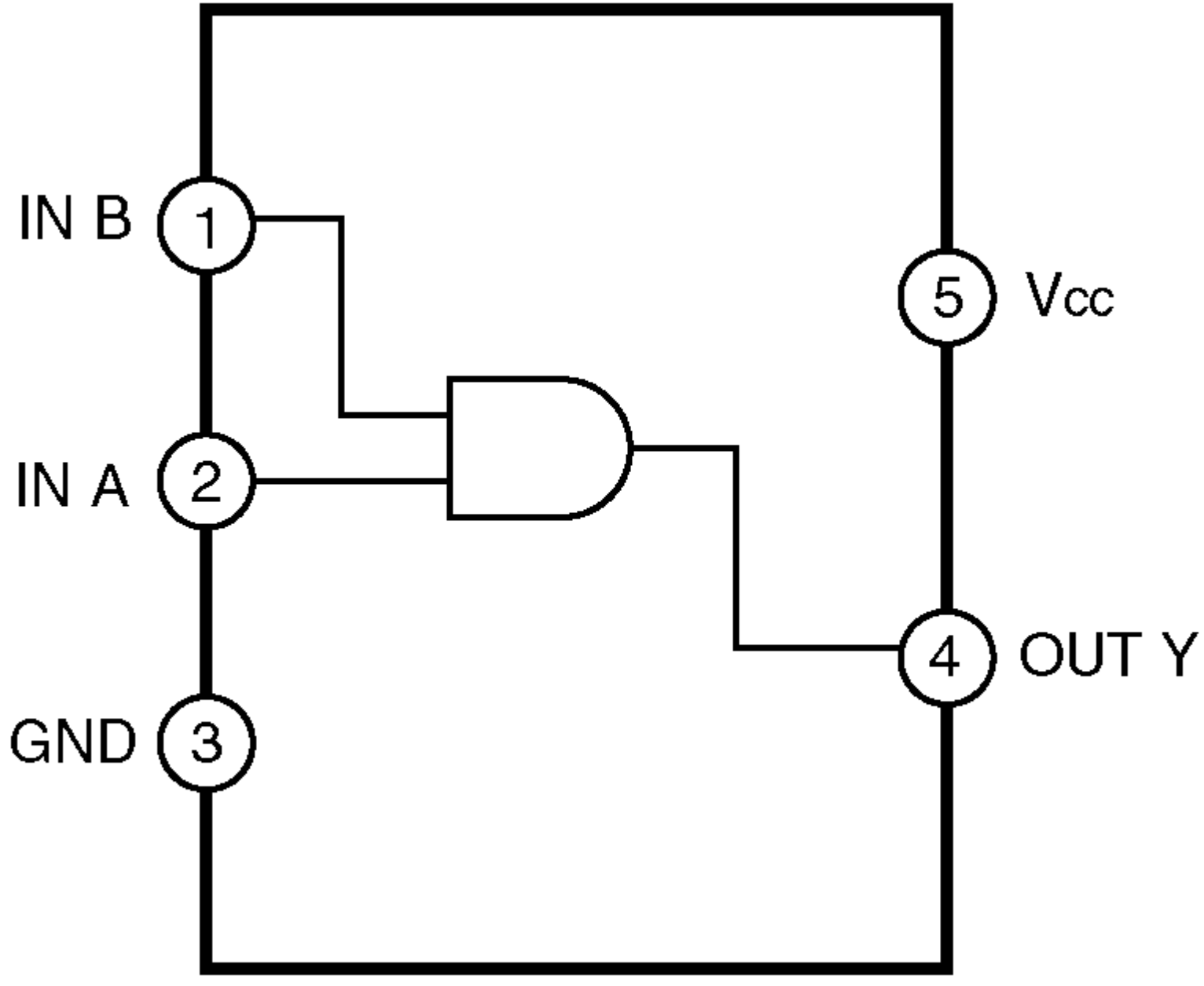
IN B
1
IN A
2
GND
3
5
Vcc
4
OUT Y

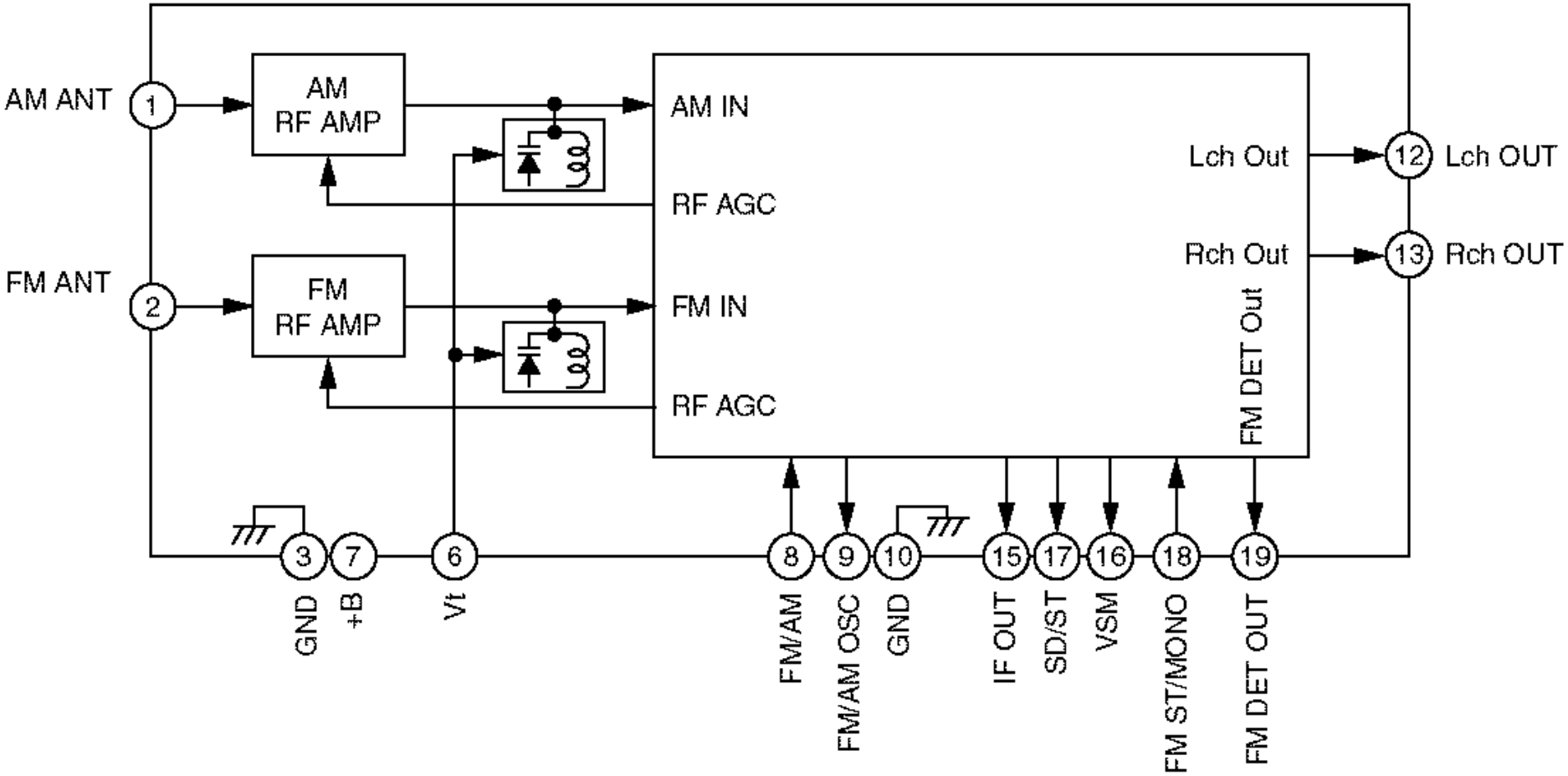
AM ANT
1
AM
RF AMP
FM ANT
2
FM
RF AMP
AM IN
RF AGC
FM IN
RF AGC
Lch Out
Rch Out
FM DET Out
12
Lch OUT
13
Rch OUT
3
7
6
8
9
10
15
17
16
18
19
GND
+B
Vt
FM/AM
FM/AM OSC
GND
IF OUT
SD/ST
VSM
FM ST/MONO
FM DET OUT

**CAUTION:**

This product utilizes a laser diode with the unit turned "on", laser radiation is emitted from the pickup lens.

Laser radiation from the pickup lens is safety level, but be sure the followings:

1. Do not disassemble the optical pickup unit, since radiation from exposed laser diode is dangerous.
2. Do not adjust the variable resistor on the pickup unit. It was already adjusted.
3. Do not look at the focus lens using optical instruments.
4. Recommend not to look at pickup lens for a long time.

**DANGER!** Visible and invisible laser radiation when open. Avoid direct exposure to beam.

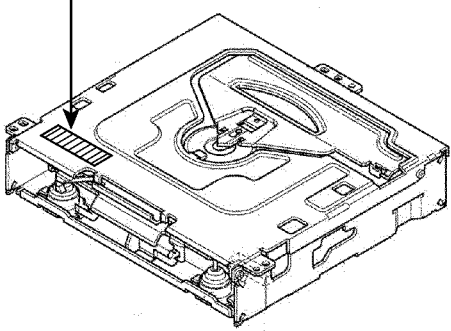

Deck Ass'y (Upper Side)

**Caution**

This Product utilizes a laser.

Use of controls or adjustments or performance of procedures other than those specified herein may result in hazardous radiation exposure.

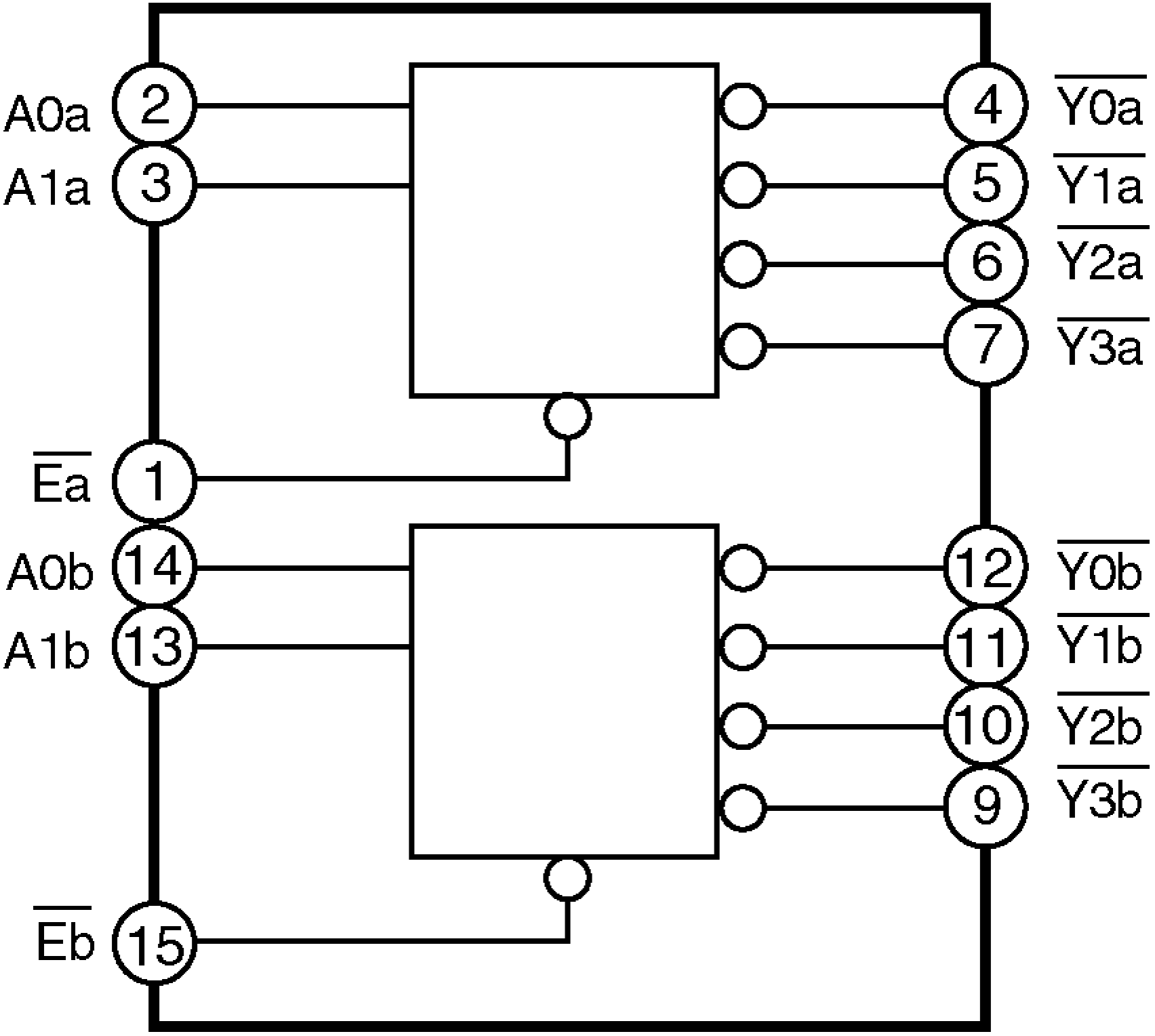
A0a
2
A1a
3
$\overline{Ea}$
1
A0b
14
A1b
13
$\overline{Eb}$
15
4
$\overline{Y0a}$
5
$\overline{Y1a}$
6
$\overline{Y2a}$
7
$\overline{Y3a}$
12
$\overline{Y0b}$
11
$\overline{Y1b}$
10
$\overline{Y2b}$
9
$\overline{Y3b}$

THIS PAGE IS JUST FOR THE PAGE LAYOUT USE ONLY.

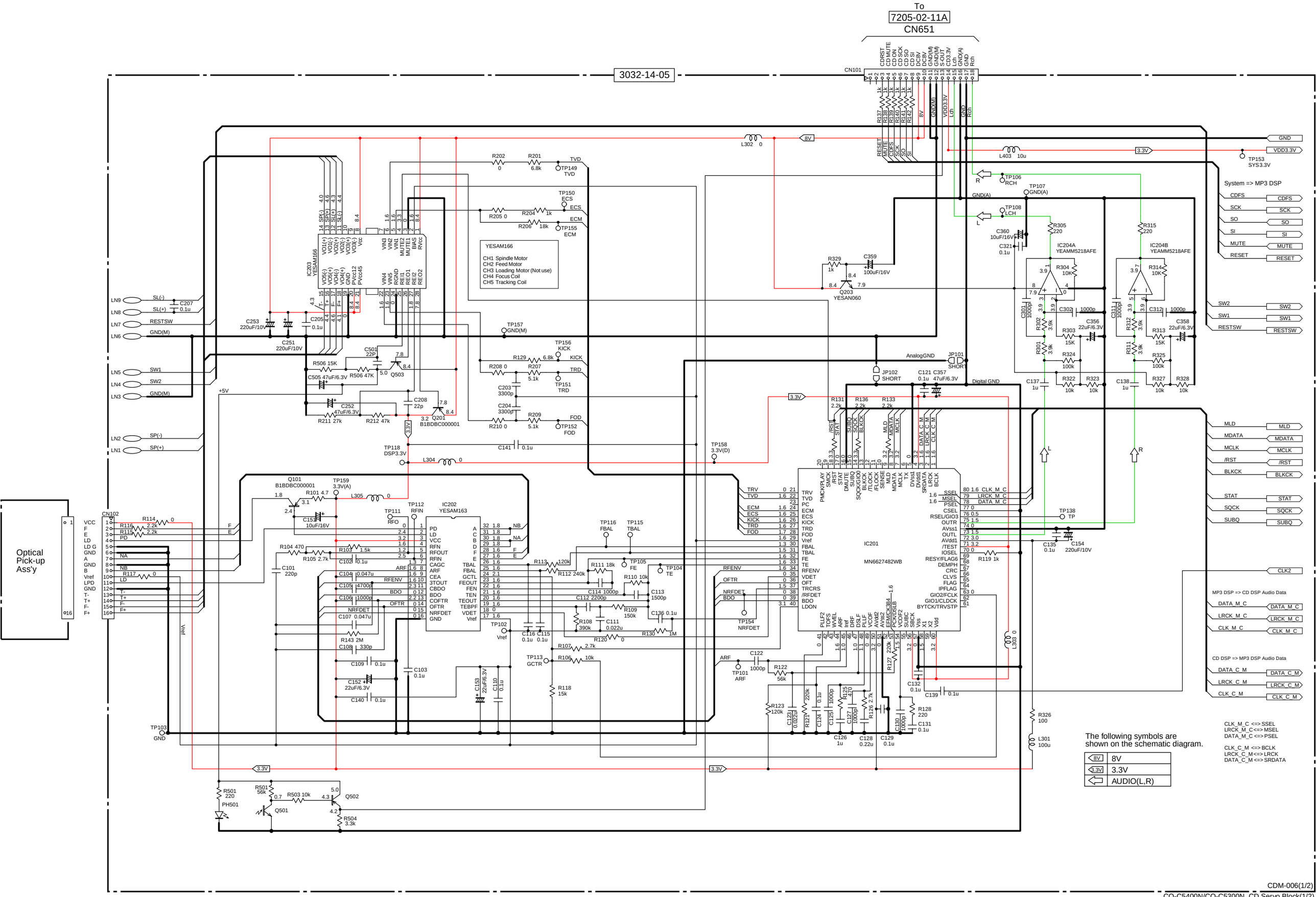
To
7205-02-11A
CN651
3032-14-05
CN101
CDRST
CD MUTE
CD DOX
CD SCK
CD SI
CD SO
DC8V
DC8V
GND(M)
GND(M)
S-OUT
CD3.3V
Lch
GND(A)
GND
Rch
R137 1k
R138 1k
R139 1k
R140 1k
R141 1k
R142 1k
8V
VDD3.3V
RESET
MUTE
CDFS
SCK
SO
SI
L302 0
L403 10u
3.3V
GND
VDD3.3V
TP153 SYS3.3V
System => MP3 DSP
CDFS
SCK
SO
SI
MUTE
RESET
SW2
SW1
RESTSW
MLD
MDATA
MCLK
/RST
BLKCK
STAT
SQCK
SUBQ
CLK2
MP3 DSP => CD DSP Audio Data
DATA_M_C
LRCK_M_C
CLK_M_C
CD DSP => MP3 DSP Audio Data
DATA_C_M
LRCK_C_M
CLK_C_M
TP106 RCH
TP107 GND(A)
TP108 LCH
GND(A)
C360 10uF/16V
C321 0.1u
R305 220
R315 220
IC204A YEAMM5218AFE
IC204B YEAMM5218AFE
R304 10K
R314 10K
C301 1000pl
C311 1000pl
C302 1000p
C312 1000p
C356 22uF/6.3V
C358 22uF/6.3V
R302 3.9k
R312 3.9k
R303 15K
R313 15K
R301 3.9k
R311 3.9k
R324 100k
R325 100k
C137 1u
C138 1u
R322 10k
R323 10k
R327 10k
R328 10k
R329 1k
C359 100uF/16V
Q203 YESAN060
R202 0
R201 6.8k
TP149 TVD
TVD
TP150 ECS
ECS
R205 0
R204 1k
R206 18k
ECM
TP155 ECM
YESAM166
CH1 Spindle Motor
CH2 Feed Motor
CH3 Loading Motor (Not use)
CH4 Focus Coil
CH5 Tracking Coil
IC203 YESAM166
LN9 SL(-)
LN8 SL(+)
LN7 RESTSW
LN6 GND(M)
LN5 SW1
LN4 SW2
LN3 GND(M)
LN2 SP(-)
LN1 SP(+)
C207 0.1u
C253 220uF/10V
C251 220uF/10V
C205 0.1u
TP157 GND(M)
TP156 KICK
KICK
R129 6.8k
R208 0
R207 5.1k
TRD
TP151 TRD
C501 22P
Q503
R506 15K
R506 47K
C505 47uF/6.3V
C252 47uF/6.3V
R211 27k
R212 47k
C208 22p
Q201 B1BDBC000001
+5V
3.3V
C203 3300p
C204 3300p
R210 0
R209 5.1k
FOD
TP152 FOD
TP118 DSP3.3V
L304 0
C141 0.1u
TP158 3.3V(D)
JP102 SHORT
AnalogGND
JP101 SHORT
C121 0.1u
C357 47uF/6.3V
Digital GND
R131 2.2k
R136 2.2k
R133 2.2k
/RST
STAT
SUBQ
SQCK
BLKCK
MLD
MDATA
MCLK
IC201
MN6627482WB
TRV
TVD
PC
ECM
ECS
KICK
TRD
FOD
Vref
FBAL
TBAL
FE
TE
RFENV
VDET
OFT
TRCRS
/RFDET
BDO
LDON
PLLF2
TOFS
WVEL
ARF
Iref
DRF
DLLF
PLLF
VCOF
AVdd2
AVss2
EFMCK384
VCOF2
VCOF2LB
SUBC
SBCK
Vss
X1
X2
Vdd
PMCK/PLAY
SMCK
/RST
STAT
/MUTE
SUBQ
SQCK/CD00
BLKCK
/TLOCK
/FLOCK
SENSE
MLD
MDATA
MCLK
TX
DVss1
DVdd1
SRDATA
LRCK
BCLK
SSEL
MSEL
PSEL
CSEL
RSEL/GIO3
OUTR
AVss1
OUTL
AVdd1
/TEST
IOSEL
RESY/FLAG6
DEMPH
CRC
CLVS
FLAG
IPFLAG
GIO2/FCLK
GIO1/CLDCK
BYTCK/TRVSTP
CLK_M_C
LRCK_M_C
DATA_M_C
CLK_C_M
LRCK_C_M
DATA_C_M
TP138 TP
C135 0.1u
C154 220uF/10V
R119 1k
L303 0
R326 100
L301 100u
Optical Pick-up Ass'y
CN102
VCC
F
E
LD
LD G
GND
A
GND
B
Vref
LPD
GND
T-
T+
F-
F+
R114 0
R116 2.2k
R115 2.2k
PD
NA
NB
R117 0
LD
Q101 B1BDBC000001
TP159 3.3V(A)
R101 4.7
L305 0
C151 10uF/16V
TP111 RFO
TP112 RFIN
IC202 YESAM163
PD
LD
VCC
RFN
RFOUT
RFIN
CAGC
ARF
CEA
3TOUT
CBDO
BDO
COFTR
OFTR
NRFDET
GND
TBAL
FBAL
GCTL
FEOUT
FEN
TEN
TEOUT
TEBPF
VDET
Vref
R104 470
R105 2.7k
R103 1.5k
C102 0.1u
C101 220p
C104 0.047u
C105 4700p
C106 1000p
C107 0.047u
R143 2M
C108 330p
C109 0.1u
C152 22uF/6.3V
C140 0.1u
C103 0.1u
R113 120k
R112 240k
TP116 FBAL
TP115 TBAL
R111 18k
TP105 FE
TP104 TE
R110 10k
C114 1000p
C113 1500p
C112 2200p
R109 150k
R108 390k
C111 0.022u
C136 0.1u
R130 1M
R120 0
C116 0.1u
C115 0.1u
TP102 Vref
R107 2.7k
TP113 GCTR
R106 10k
R118 15k
C153 22uF/6.3V
C110 0.1u
TP154 NRFDET
TP101 ARF
C122 1000p
R122 56k
R123 120k
C123 0.022u
R121 220k
C124 0.1u
C125 1000p
R125 470
C127 1000p
R126 2.7k
C126 1u
C128 0.22u
C129 0.1u
R127 220k
C130 1000p
C132 0.1u
C139 0.1u
R128 220
C131 0.1u
TP103 GND
R501 220
PH501
R501 56k
Q501
R503 10k
Q502
R504 3.3k
The following symbols are shown on the schematic diagram.
8V 8V
3.3V 3.3V
AUDIO(L,R)
CLK_M_C <=> SSEL
LRCK_M_C <=> MSEL
DATA_M_C <=> PSEL
CLK_C_M <=> BCLK
LRCK_C_M <=> LRCK
DATA_C_M <=> SRDATA
CDM-006(1/2)
CQ-C5400N/CQ-C5300N CD Servo Block(1/2)

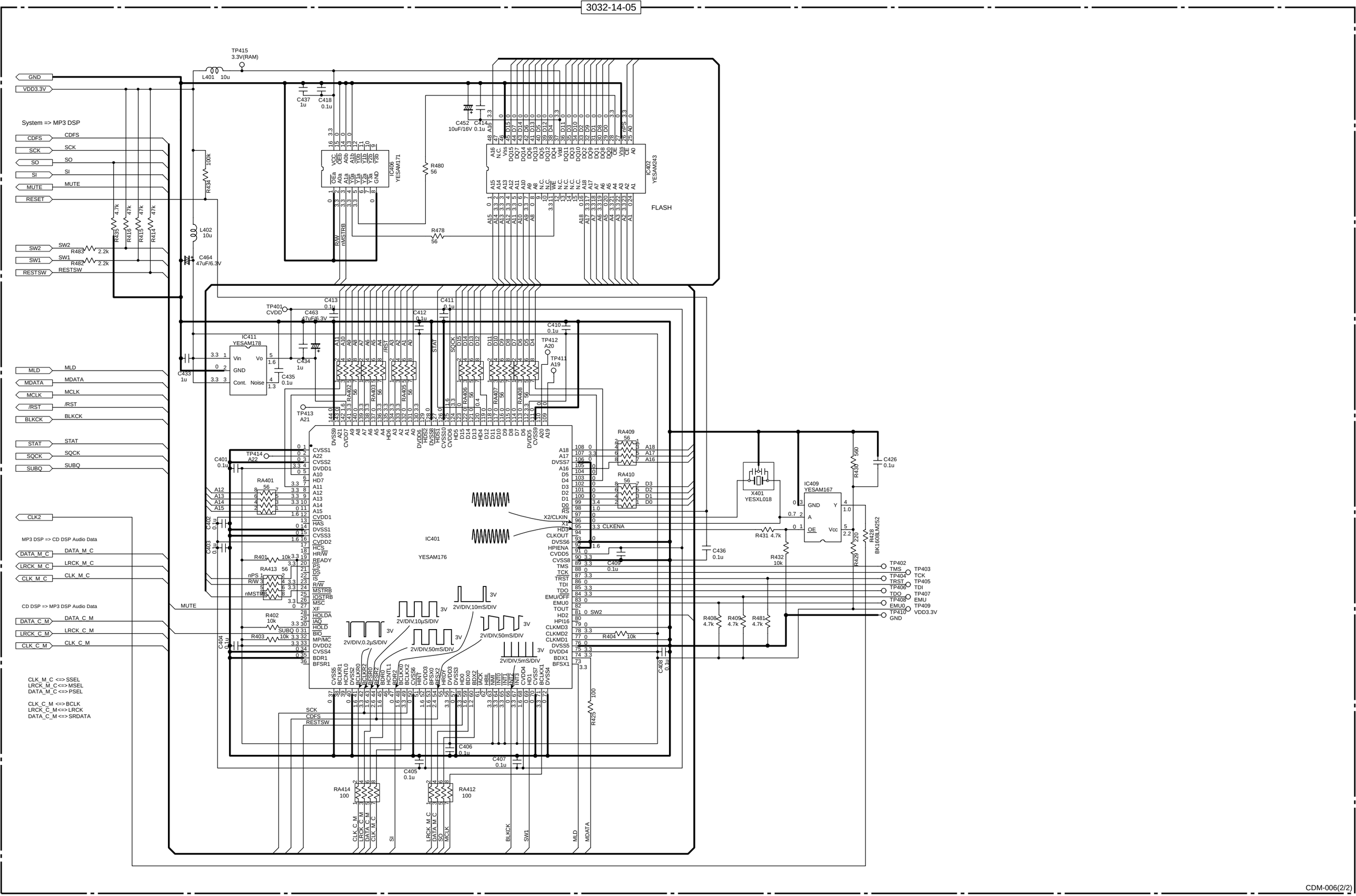
System => MP3 DSP
GND
VDD3.3V
CDFS
SCK
SO
SI
MUTE
RESET
SW2
SW1
RESTSW
MLD
MDATA
MCLK
/RST
BLKCK
STAT
SQCK
SUBQ
CLK2
MP3 DSP => CD DSP Audio Data
DATA_M_C
LRCK_M_C
CLK_M_C
CD DSP => MP3 DSP Audio Data
DATA_C_M
LRCK_C_M
CLK_C_M
CLK_M_C <=> SSEL
LRCK_M_C <=> MSEL
DATA_M_C <=> PSEL
CLK_C_M <=> BCLK
LRCK_C_M <=> LRCK
DATA_C_M <=> SRDATA
TP415
3.3V(RAM)
L401 10u
C437 1u
C418 0.1u
C452 10uF/16V
C414 0.1u
IC406
YESAM171
IC402
YESAM243
FLASH
R480 56
R478 56
R434 100k
R435 4.7k
R416 4.7k
R415 4.7k
R414 4.7k
R483 2.2k
R482 2.2k
L402 10u
C464 47uF/6.3V
TP401
CVDD
C463 47uF/6.3V
C413 0.1u
C412 0.1u
C411 0.1u
C410 0.1u
TP412
A20
TP411
A19
IC411
YESAM178
Vin
Vo
GND
Cont.
Noise
C433 1u
C434 1u
C435 0.1u
TP413
A21
TP414
A22
C401 0.1u
C402 0.1u
C403 0.1u
C404 0.1u
RA401 56
RA409 56
RA410 56
RA413 56
RA414 100
RA412 100
IC401
YESAM176
CVSS1
A22
CVSS2
DVDD1
A10
HD7
A11
A12
A13
A14
A15
CVDD1
HAS
DVSS1
CVSS3
CVDD2
HCS
HR/W
READY
PS
DS
IS
R/W
MSTRB
IOSTRB
MSC
XF
HOLDA
IAQ
HOLD
BIO
MP/MC
DVDD2
CVSS4
BDR1
BFSR1
X2/CLKIN
X1
HD3
CLKOUT
DVSS6
HPIENA
CVDD5
CVSS8
TMS
TCK
TRST
TDI
TDO
EMU/OFF
EMU0
TOUT
HD2
HPI16
CLKMD3
CLKMD2
CLKMD1
DVSS5
DVDD4
BDX1
BFSX1
2V/DIV,10μS/DIV
2V/DIV,0.2μS/DIV
2V/DIV,50mS/DIV
2V/DIV,10mS/DIV
2V/DIV,5mS/DIV
3V
X401
YESXL018
IC409
YESAM167
GND
A
OE
Y
Vcc
R431 4.7k
R432 10k
R430 560
R429 220
R428 BK1608LM252
C426 0.1u
C436 0.1u
C409 0.1u
C408 0.1u
R404 10k
R408 4.7k
R409 4.7k
R481 4.7k
R425 100
TP402 TMS
TP404 TRST
TP406 TDO
TP408 EMU0
TP410 GND
TP403 TCK
TP405 TDI
TP407 EMU
TP409 VDD3.3V
C405 0.1u
C406 0.1u
C407 0.1u

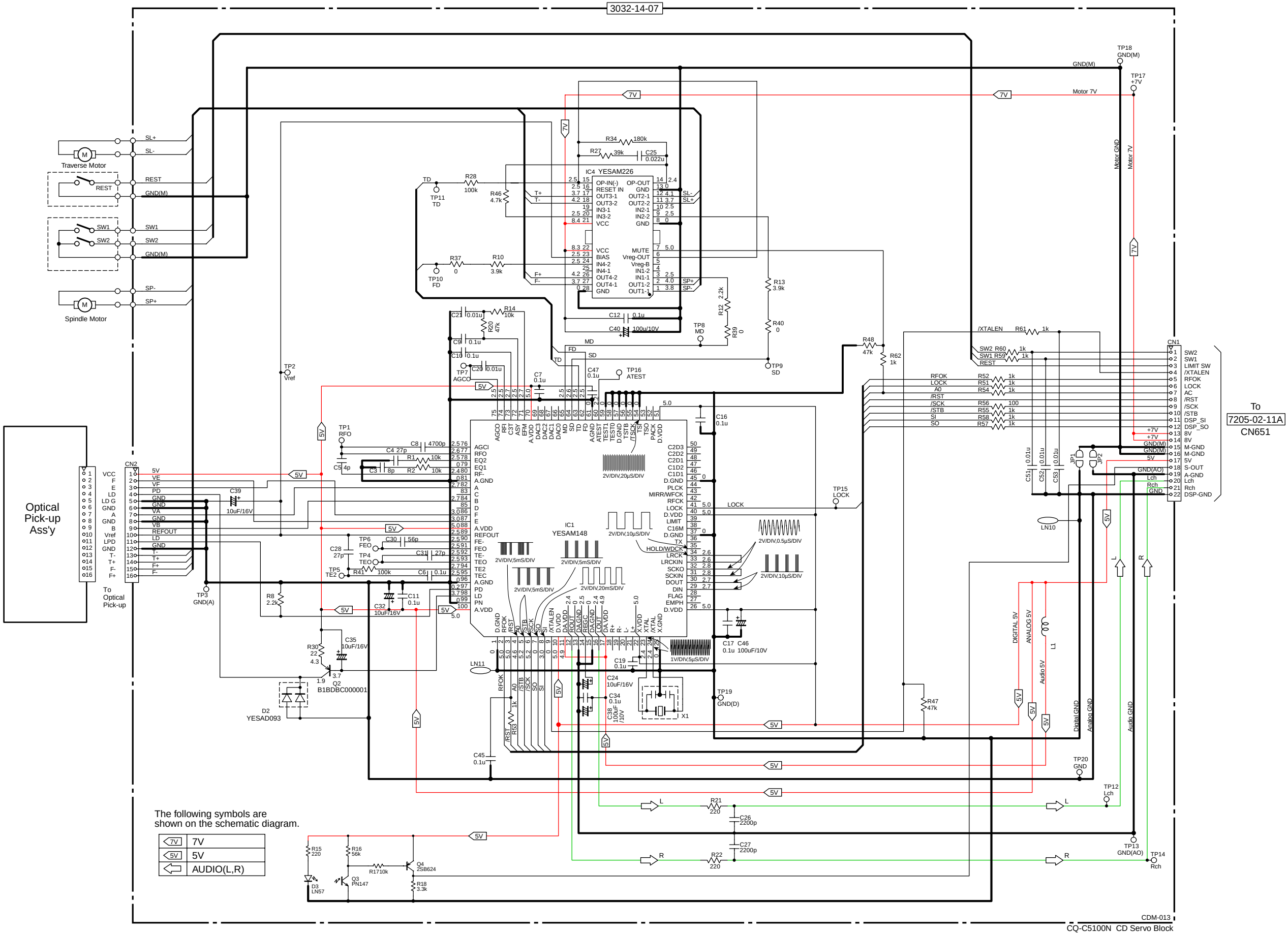
Traverse Motor
Spindle Motor
Optical Pick-up Ass'y
To Optical Pick-up
IC4 YESAM226
IC1 YESAM148
Q2 B1BDBC000001
D2 YESAD093
X1
L1
To 7205-02-11A CN651
CN1
CN2
The following symbols are shown on the schematic diagram.
7V
5V
AUDIO(L,R)
CDM-013
CQ-C5100N CD Servo Block

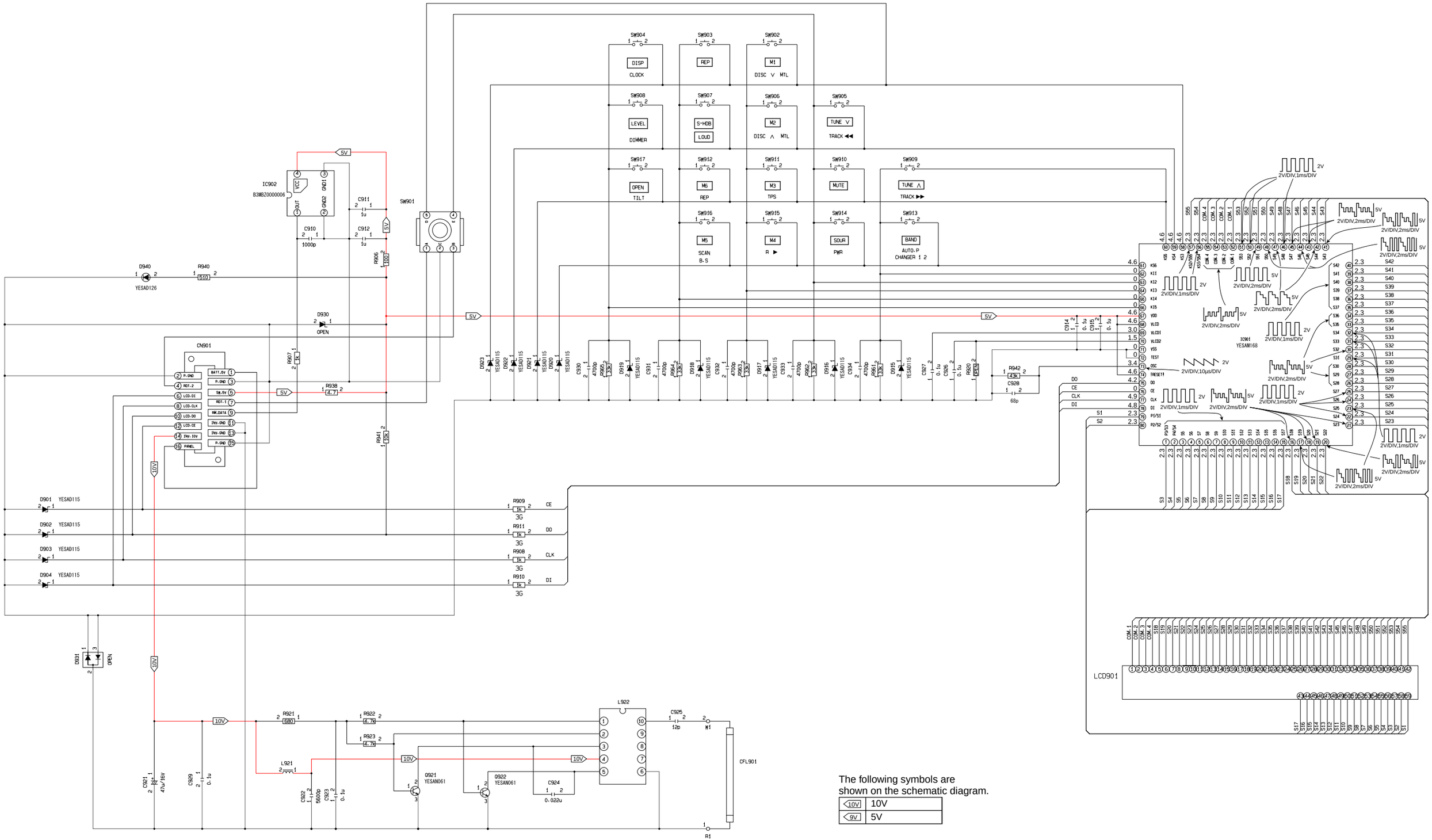


The following symbols are shown on the schematic diagram.

| | |
|---|---|
| <10V | 10V |
| <9V | 5V |

| | | *2 R261/R361/R265/R365 | *3 L295/L395/L396/R348 | *4 D770/D771 |
|---|---|---|---|---|
| C5100N | 2.5V_PREOUT | 180 ohms | 18 ohms | OPEN |

| *1 | R221/R321 |
|---|---|
| 5V-PREOUT | 120k |
| 2.5V_PREOUT | 56k |

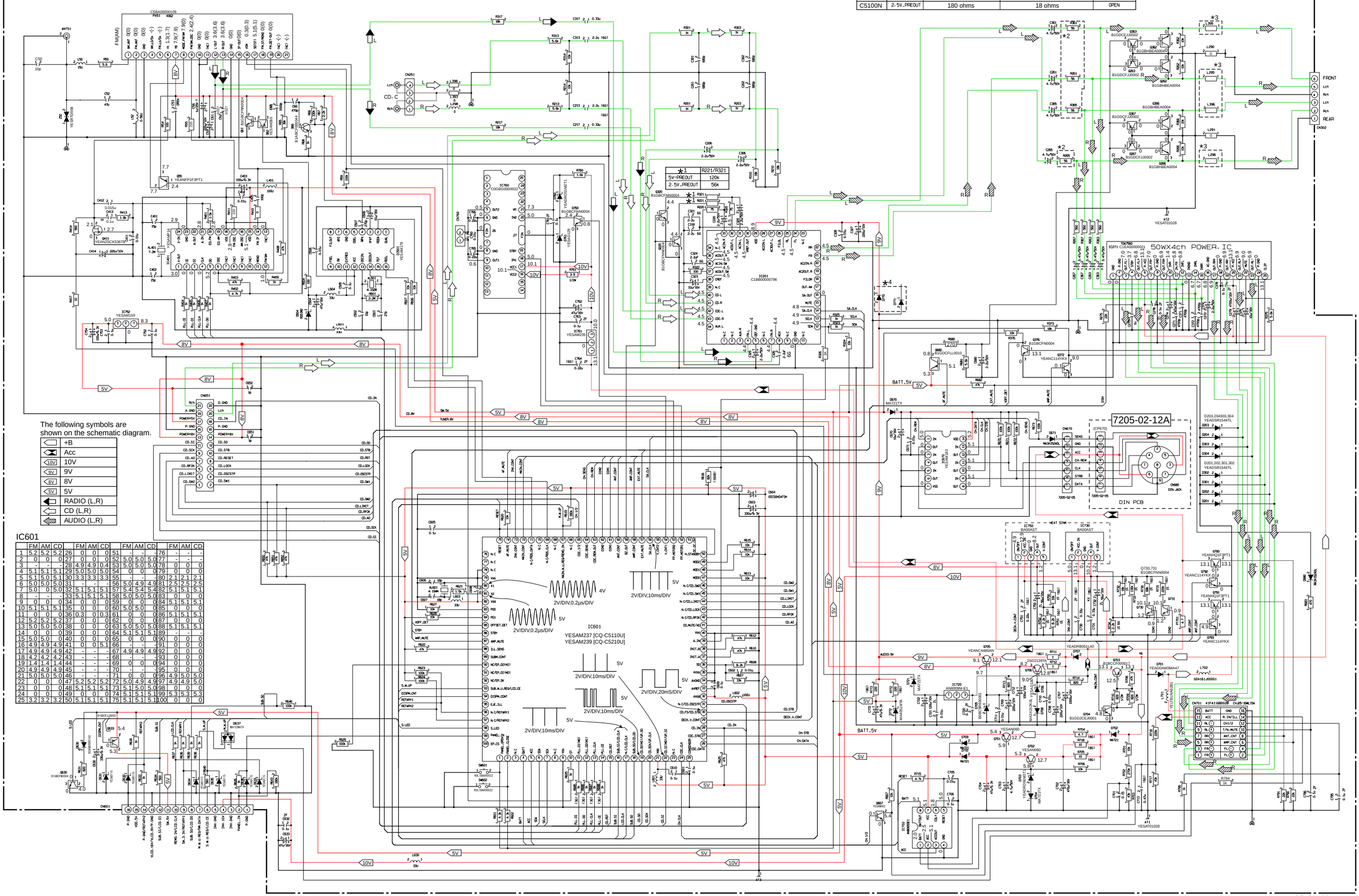


The following symbols are shown on the schematic diagram.

| | |
|---|---|
| | +B |
| | Acc |
| 10V | 10V |
| 9V | 9V |
| 8V | 8V |
| 5V | 5V |
| | RADIO (L,R) |
| | CD (L,R) |
| | AUDIO (L,R) |

## IC601

| | FM | AM | CD | | FM | AM | CD | | FM | AM | CD | | FM | AM | CD |
|---|---|---|---|---|---|---|---|---|---|---|---|---|---|---|---|
| 1 | 5.2 | 5.2 | 5.2 | 26 | 0 | 0 | 0 | 51 | - | - | - | 76 | - | - | - |
| 2 | 0 | 0 | 0 | 27 | 0 | 0 | 0 | 52 | 5.0 | 5.0 | 5.0 | 77 | - | - | - |
| 3 | - | - | - | 28 | 4.9 | 4.9 | 0.4 | 53 | 5.0 | 5.0 | 5.0 | 78 | 0 | 0 | 0 |
| 4 | 5.1 | 5.1 | 5.1 | 29 | 5.0 | 5.0 | 5.0 | 54 | 0 | 0 | 0 | 79 | 0 | 0 | 0 |
| 5 | 5.1 | 5.0 | 5.1 | 30 | 3.3 | 3.3 | 3.3 | 55 | - | - | - | 80 | 2.1 | 2.1 | 2.1 |
| 6 | 5.0 | 5.0 | 5.0 | 31 | - | - | - | 56 | 5.0 | 4.9 | 4.9 | 81 | 2.5 | 2.5 | 2.5 |
| 7 | 5.0 | 0 | 5.0 | 32 | 5.1 | 5.1 | 5.1 | 57 | 5.4 | 5.4 | 5.4 | 82 | 5.1 | 5.1 | 5.1 |
| 8 | - | - | - | 33 | 5.1 | 5.1 | 5.1 | 58 | 5.0 | 5.0 | 5.0 | 83 | 0 | 0 | 0 |
| 9 | 0 | 0 | 0 | 34 | 0 | 0 | 0 | 59 | 0 | 0 | 0 | 84 | 5.1 | 5.1 | 5.1 |
| 10 | 5.1 | 5.1 | 5.1 | 35 | 0 | 0 | 0 | 60 | 5.0 | 5.0 | 0 | 85 | 0 | 0 | 0 |
| 11 | 0 | 0 | 0 | 36 | 0.3 | 0 | 0.3 | 61 | 0 | 0 | 0 | 86 | 5.1 | 5.1 | 5.1 |
| 12 | 5.2 | 5.2 | 5.2 | 37 | 0 | 0 | 0 | 62 | 0 | 0 | 0 | 87 | 0 | 0 | 0 |
| 13 | 5.0 | 5.0 | 5.0 | 38 | 0 | 0 | 0 | 63 | 5.0 | 5.0 | 5.0 | 88 | 5.1 | 5.1 | 5.1 |
| 14 | 0 | - | 0 | 39 | 0 | 0 | 0 | 64 | 5.1 | 5.1 | 5.1 | 89 | - | - | - |
| 15 | 5.0 | 5.0 | 0 | 40 | 0 | 0 | 0 | 65 | 0 | 0 | 0 | 90 | 0 | 0 | 0 |
| 16 | 4.9 | 4.9 | 4.9 | 41 | 0 | 0 | 5.1 | 66 | - | - | - | 91 | 0 | 0 | 0 |
| 17 | 4.9 | 4.9 | 4.9 | 42 | - | - | - | 67 | 4.9 | 4.9 | 4.9 | 92 | 0 | 0 | 0 |
| 18 | 4.2 | 4.2 | 4.2 | 43 | - | - | - | 68 | - | - | - | 93 | 0 | 0 | 0 |
| 19 | 1.4 | 1.4 | 1.4 | 44 | - | - | - | 69 | 0 | 0 | 0 | 94 | 0 | 0 | 0 |
| 20 | 4.9 | 4.9 | 4.9 | 45 | - | - | - | 70 | - | - | - | 95 | 0 | 0 | 0 |
| 21 | 5.0 | 5.0 | 5.0 | 46 | - | - | - | 71 | 0 | 0 | 0 | 96 | 4.9 | 5.0 | 5.0 |
| 22 | 0 | 0 | 0 | 47 | 5.2 | 5.2 | 5.2 | 72 | 5.0 | 4.9 | 4.9 | 97 | 4.9 | 4.9 | 5.0 |
| 23 | 0 | 0 | 0 | 48 | 5.1 | 5.1 | 5.1 | 73 | 5.1 | 5.0 | 5.0 | 98 | 0 | 0 | 0 |
| 24 | 0 | 0 | 0 | 49 | 0 | 0 | 0 | 74 | 5.1 | 5.1 | 5.1 | 99 | 5.3 | 5.3 | 5.3 |
| 25 | 3.2 | 3.2 | 3.2 | 50 | 5.1 | 5.1 | 5.1 | 75 | 5.1 | 5.1 | 5.1 | 100 | 0 | 0 | 0 |

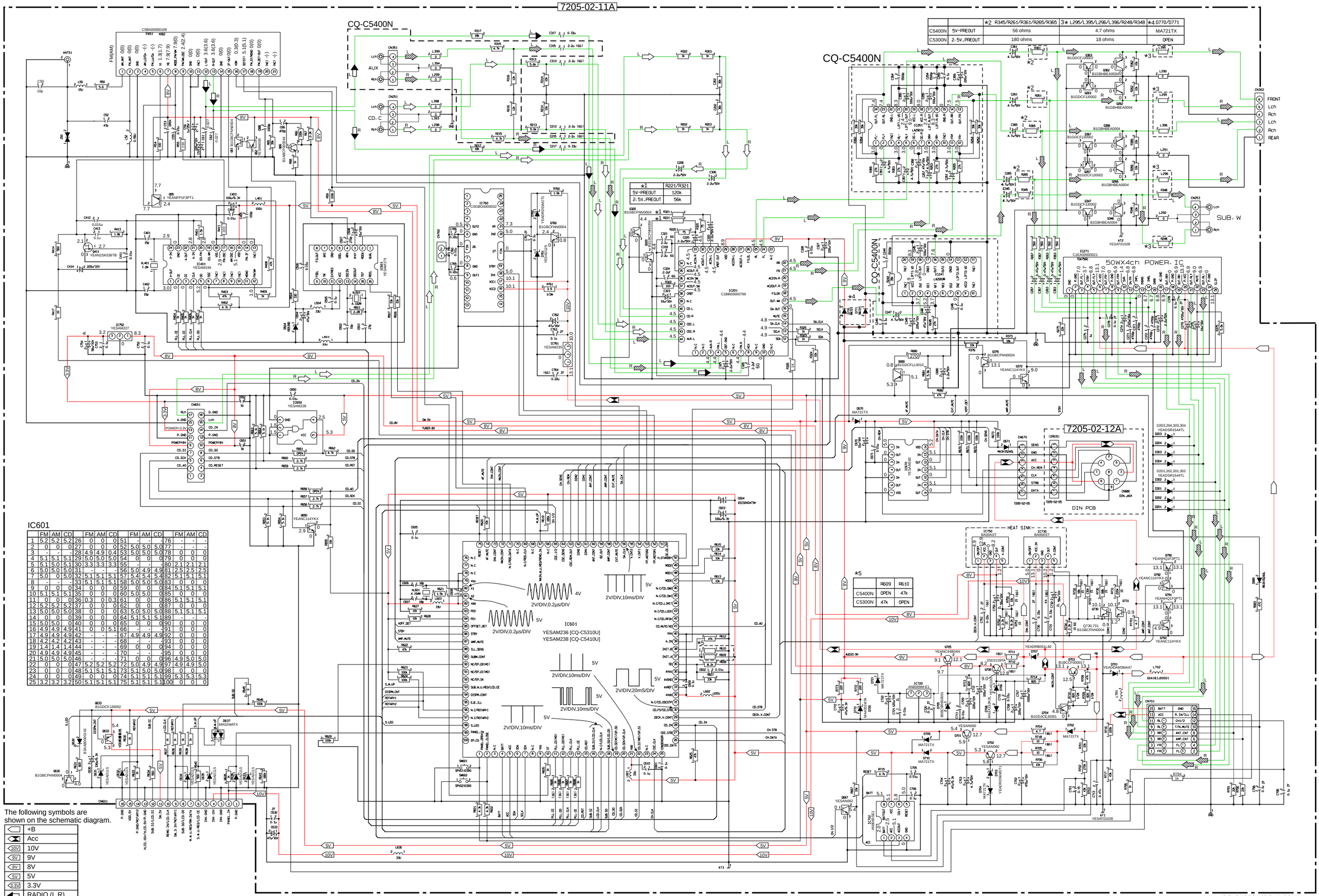


| | | *2 R345/R261/R361/R265/R365 | 3* L295/L395/L296/L396/R248/R348 | *4 D770/D771 |
|---|---|---|---|---|
| C5400N | 5V-PREOUT | 56 ohms | 4.7 ohms | MA721TX |
| C5300N | 2.5V_PREOUT | 180 ohms | 18 ohms | OPEN |

| *1 | R221/R321 |
|---|---|
| 5V-PREOUT | 120k |
| 2.5V_PREOUT | 56k |

| *5 | R609 | R610 |
|---|---|---|
| C5400N | OPEN | 47k |
| C5300N | 47k | OPEN |

IC601

| | FM | | AM | | CD | | FM | | AM | | CD | | FM | | AM | | CD | |
|---|---|---|---|---|---|---|---|---|---|---|---|---|---|---|---|---|---|---|
| 1 | 5.2 | 5.2 | 5.2 | 26 | 0 | 0 | 0 | 51 | - | - | - | 76 | - | - | - | - | - | - |
| 2 | 0 | 0 | 0 | 27 | 0 | 0 | 0 | 52 | 5.0 | 5.0 | 5.0 | 77 | - | - | - | - | - | - |
| 3 | - | - | - | 28 | 4.9 | 4.9 | 0.4 | 53 | 5.0 | 5.0 | 5.0 | 78 | 0 | 0 | 0 | 0 | 0 | 0 |
| 4 | 5.1 | 5.1 | 5.1 | 29 | 5.0 | 5.0 | 5.0 | 54 | 0 | 0 | 0 | 79 | 0 | 0 | 0 | 0 | 0 | 0 |
| 5 | 5.1 | 5.0 | 5.1 | 30 | 3.3 | 3.3 | 3.3 | 55 | - | - | - | 80 | 2.1 | 2.1 | 2.1 | - | - | - |
| 6 | 5.0 | 5.0 | 5.0 | 31 | - | - | - | 56 | 5.0 | 4.9 | 4.9 | 81 | 2.5 | 2.5 | 2.5 | - | - | - |
| 7 | 5.0 | 0 | 5.0 | 32 | 5.1 | 5.1 | 5.1 | 57 | 5.4 | 5.4 | 5.4 | 82 | 5.1 | 5.1 | 5.1 | - | - | - |
| 8 | - | - | - | 33 | 5.1 | 5.1 | 5.1 | 58 | 5.0 | 5.0 | 5.0 | 83 | 0 | 0 | 0 | - | - | - |
| 9 | 0 | 0 | 0 | 34 | 0 | 0 | 0 | 59 | 0 | 0 | 0 | 84 | 5.1 | 5.1 | 5.1 | - | - | - |
| 10 | 5.1 | 5.1 | 5.1 | 35 | 0 | 0 | 0 | 60 | 5.0 | 5.0 | 0 | 85 | 0 | 0 | 0 | - | - | - |
| 11 | 0 | 0 | 0 | 36 | 0.3 | 0 | 0.3 | 61 | 0 | 0 | 0 | 86 | 5.1 | 5.1 | 5.1 | - | - | - |
| 12 | 5.2 | 5.2 | 5.2 | 37 | 0 | 0 | 0 | 62 | 0 | 0 | 0 | 87 | 0 | 0 | 0 | - | - | - |
| 13 | 5.0 | 5.0 | 5.0 | 38 | 0 | 0 | 0 | 63 | 5.0 | 5.0 | 5.0 | 88 | 5.1 | 5.1 | 5.1 | - | - | - |
| 14 | 0 | 0 | 0 | 39 | 0 | 0 | 0 | 64 | 5.1 | 5.1 | 5.1 | 89 | - | - | - | - | - | - |
| 15 | 5.0 | 5.0 | 0 | 40 | 0 | 0 | 0 | 65 | 0 | 0 | 0 | 90 | 0 | 0 | 0 | - | - | - |
| 16 | 4.9 | 4.9 | 4.9 | 41 | 0 | 0 | 5.1 | 66 | - | - | - | 91 | 0 | 0 | 0 | - | - | - |
| 17 | 4.9 | 4.9 | 4.9 | 42 | - | - | - | 67 | 4.9 | 4.9 | 4.9 | 92 | 0 | 0 | 0 | - | - | - |
| 18 | 4.2 | 4.2 | 4.2 | 43 | - | - | - | 68 | - | - | - | 93 | 0 | 0 | 0 | - | - | - |
| 19 | 1.4 | 1.4 | 1.4 | 44 | - | - | - | 69 | 0 | 0 | 0 | 94 | 0 | 0 | 0 | - | - | - |
| 20 | 4.9 | 4.9 | 4.9 | 45 | - | - | - | 70 | - | - | - | 95 | 0 | 0 | 0 | - | - | - |
| 21 | 5.0 | 5.0 | 5.0 | 46 | - | - | - | 71 | 0 | 0 | 0 | 96 | 4.9 | 5.0 | 5.0 | - | - | - |
| 22 | 0 | 0 | 0 | 47 | 5.2 | 5.2 | 5.2 | 72 | 5.0 | 4.9 | 4.9 | 97 | 4.9 | 4.9 | 5.0 | - | - | - |
| 23 | 0 | 0 | 0 | 48 | 5.1 | 5.1 | 5.1 | 73 | 5.1 | 5.0 | 5.0 | 98 | 0 | 0 | 0 | - | - | - |
| 24 | 0 | 0 | 0 | 49 | 0 | 0 | 0 | 74 | 5.1 | 5.1 | 5.1 | 99 | 5.3 | 5.3 | 5.3 | - | - | - |
| 25 | 3.2 | 3.2 | 3.2 | 50 | 5.1 | 5.1 | 5.1 | 75 | 5.1 | 5.1 | 5.1 | 100 | 0 | 0 | 0 | - | - | - |

The following symbols are shown on the schematic diagram.

| | |
|---|---|
| | +B |
| | Acc |
| 10V | 10V |
| 9V | 9V |
| 8V | 8V |
| 5V | 5V |
| 3.3V | 3.3V |
| | RADIO (L,R) |
| | CD (L,R) |
| | AUDIO (L,R) |

# 23.4. CD Servo Block -1 [CQ-5400N/CQ-C5300N]

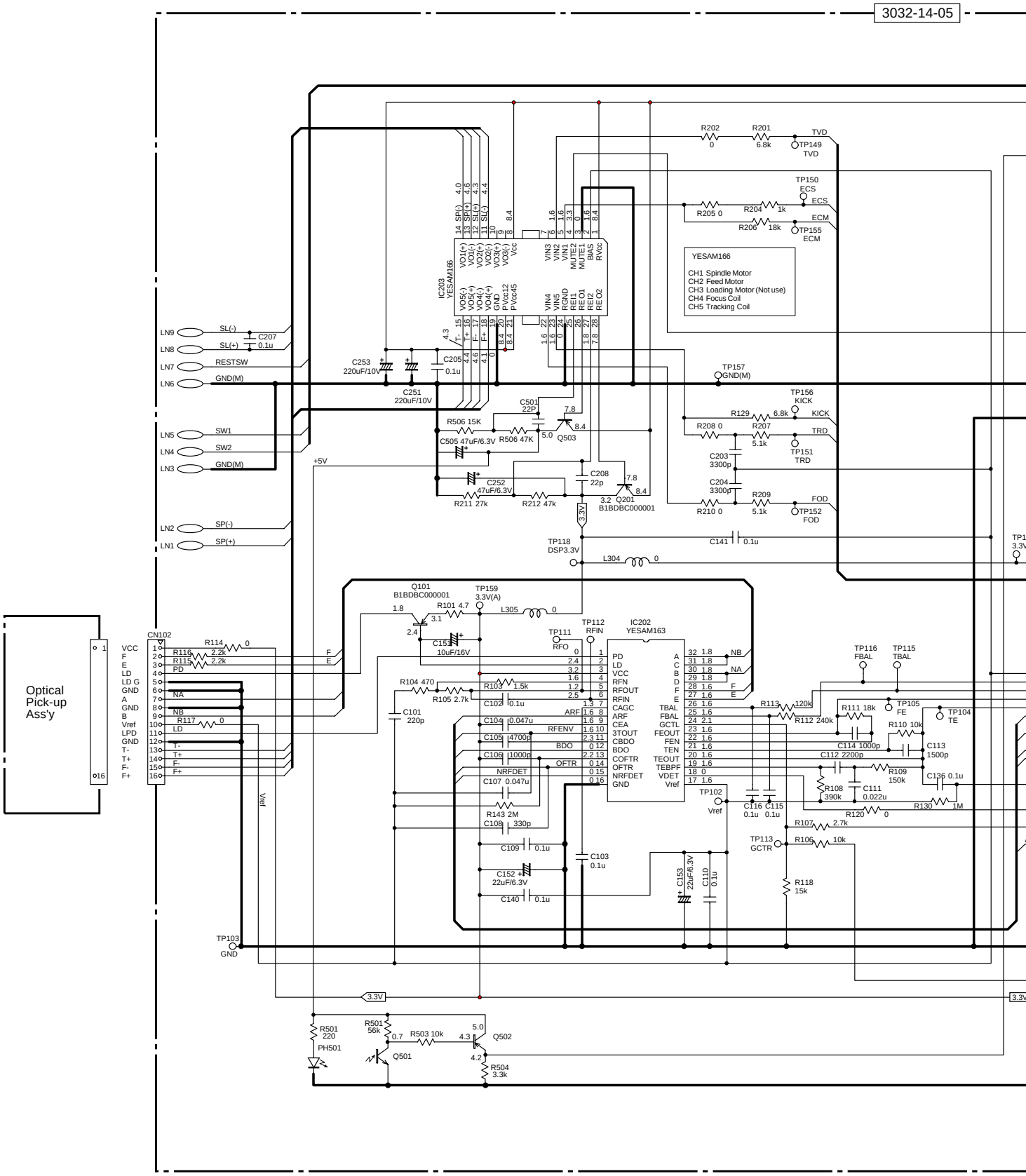

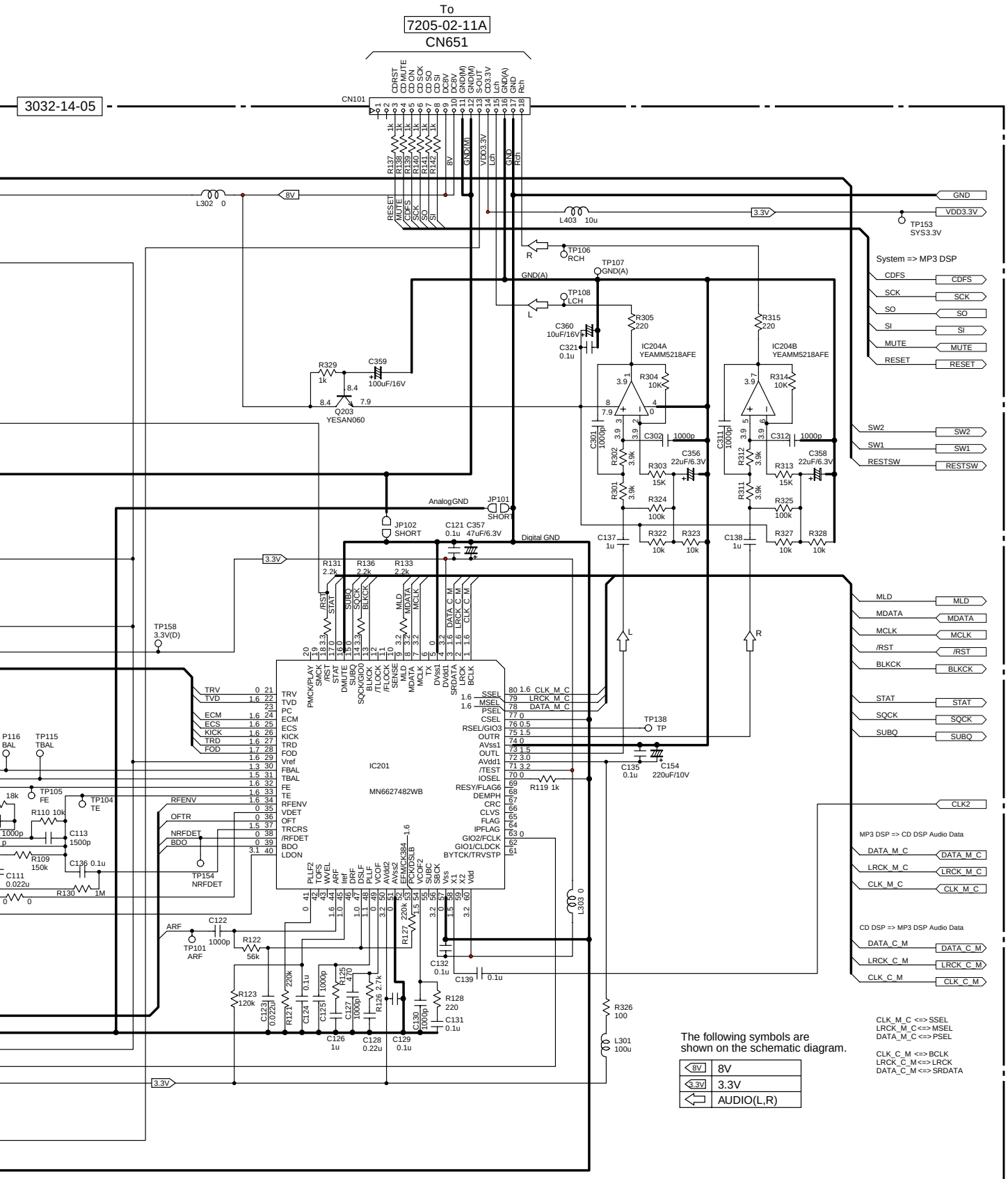


CQ-C5400N/CQ-C5300N CD Servo Block(1/2)

# 23.5. CD Servo Block -2 [CQ-C5400N/CQ-C5300N]

3032-14-05

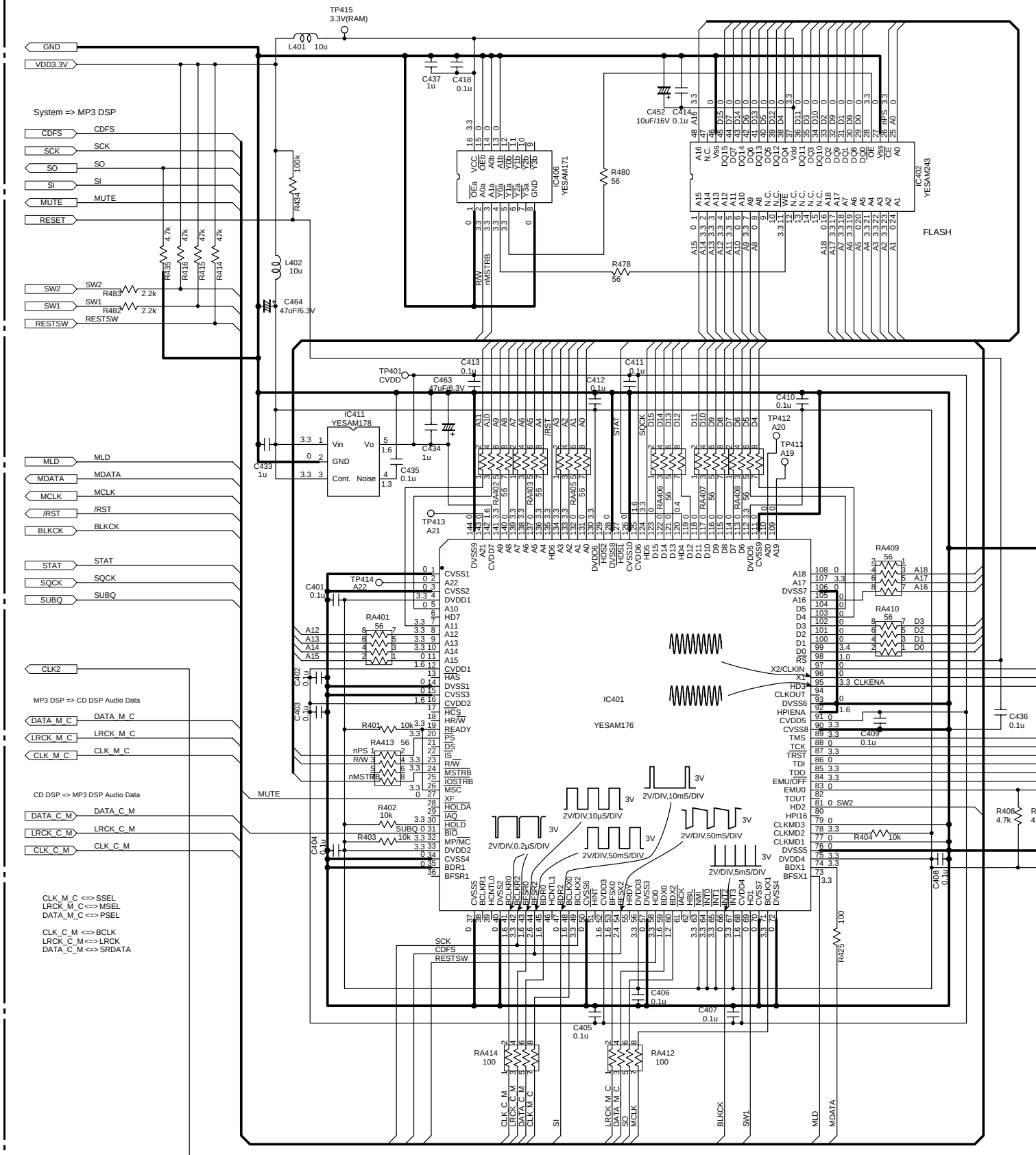

4-05

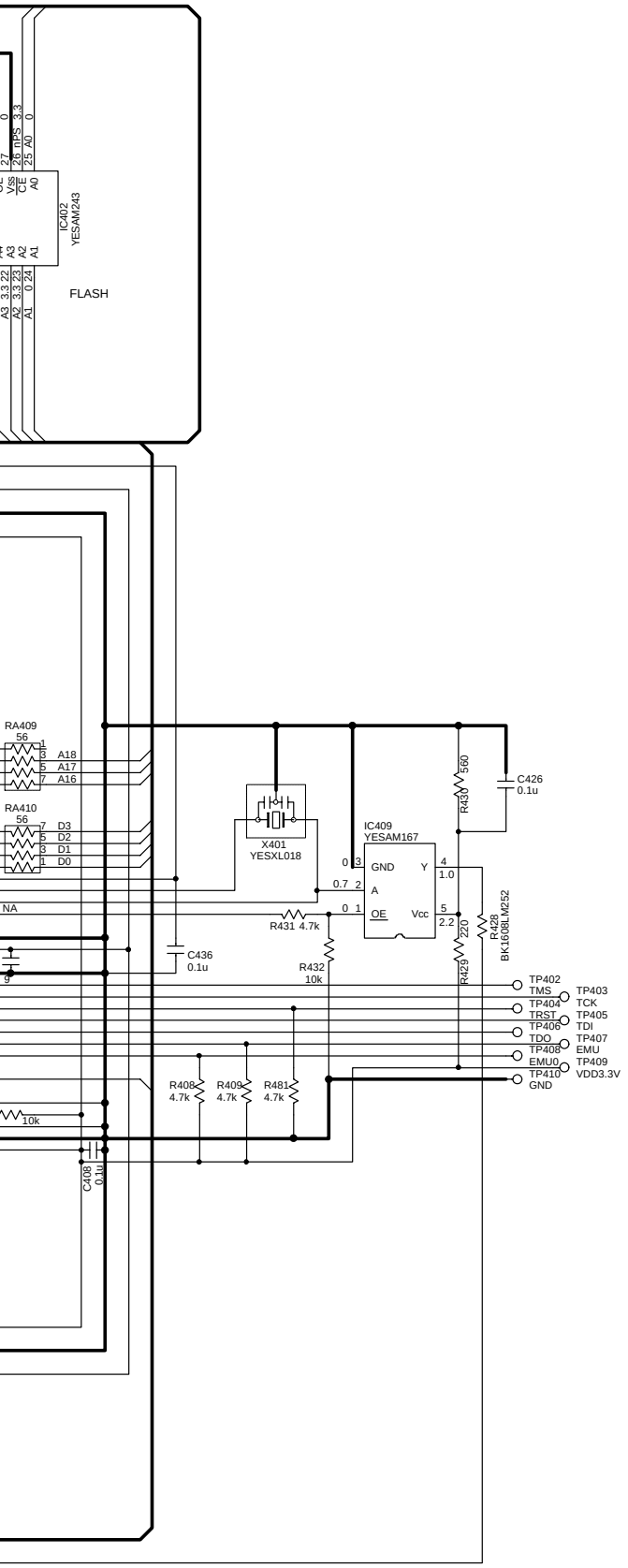


CDM-006(2/2)

CQ-C5400N/CQ-C5300N CD Servo (2/2)

# 23.6. CD Servo Block [CQ-C5100N]

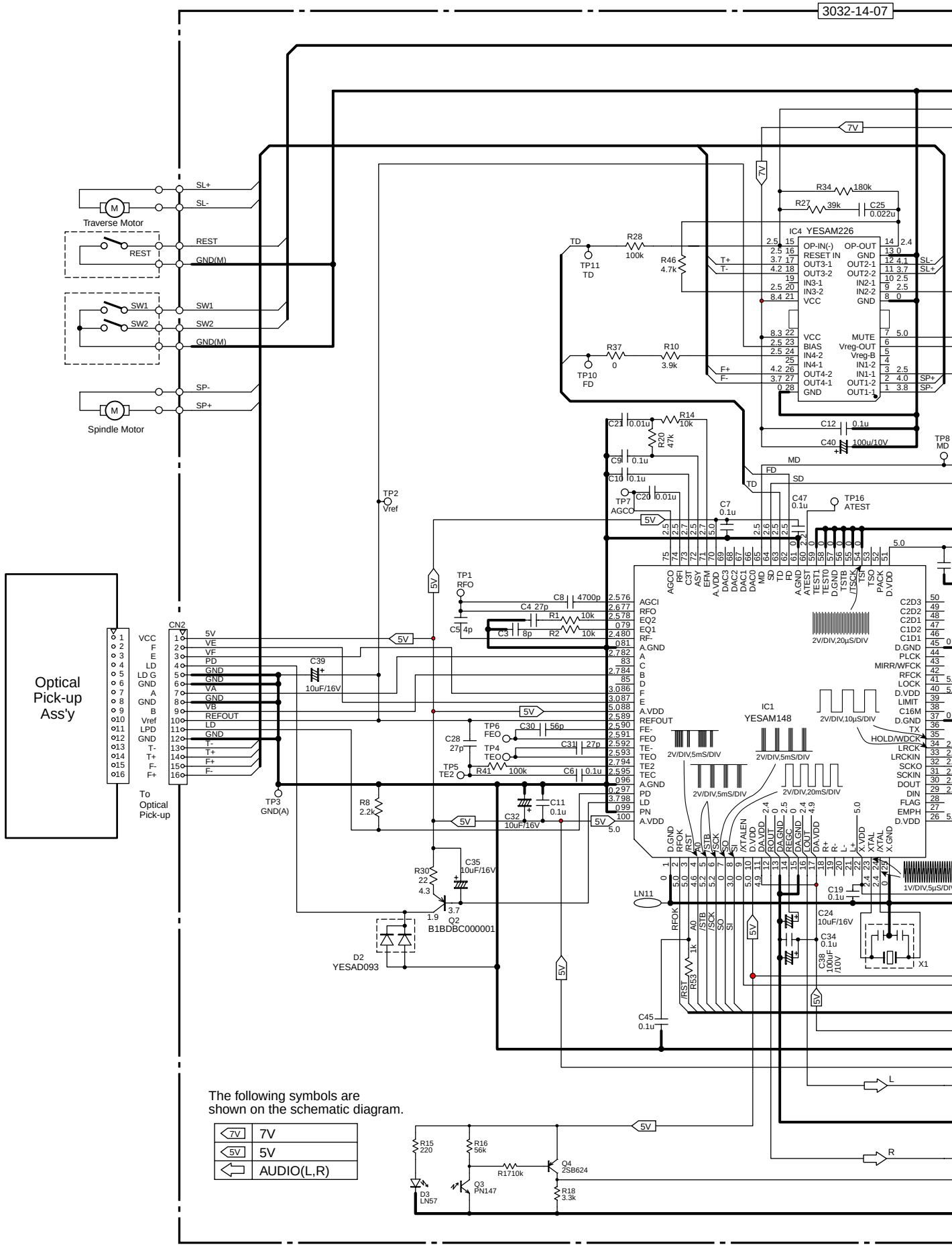

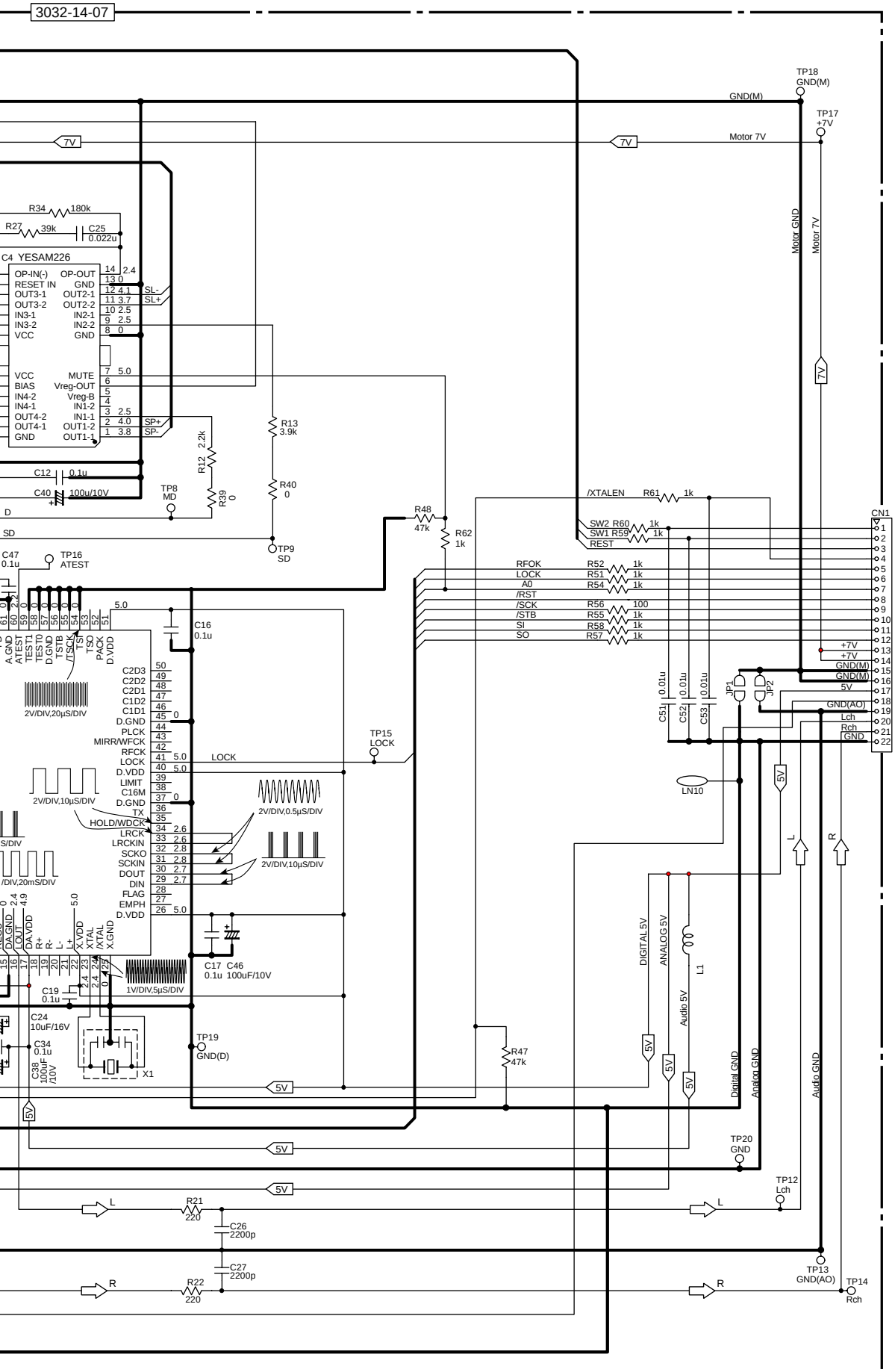


CQ-C5100N CD Servo Block

# 23.3. Display Block

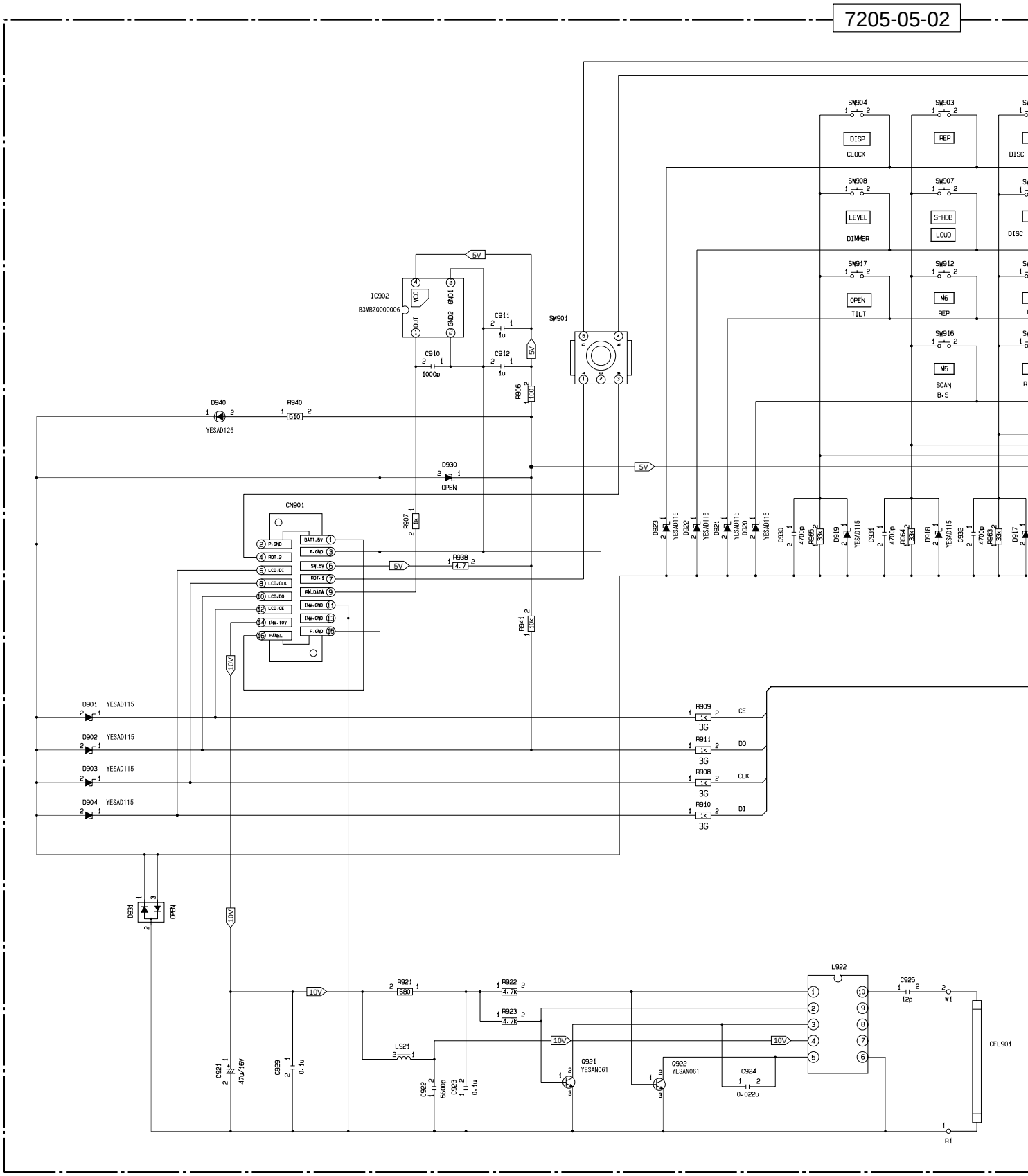

05-05-02

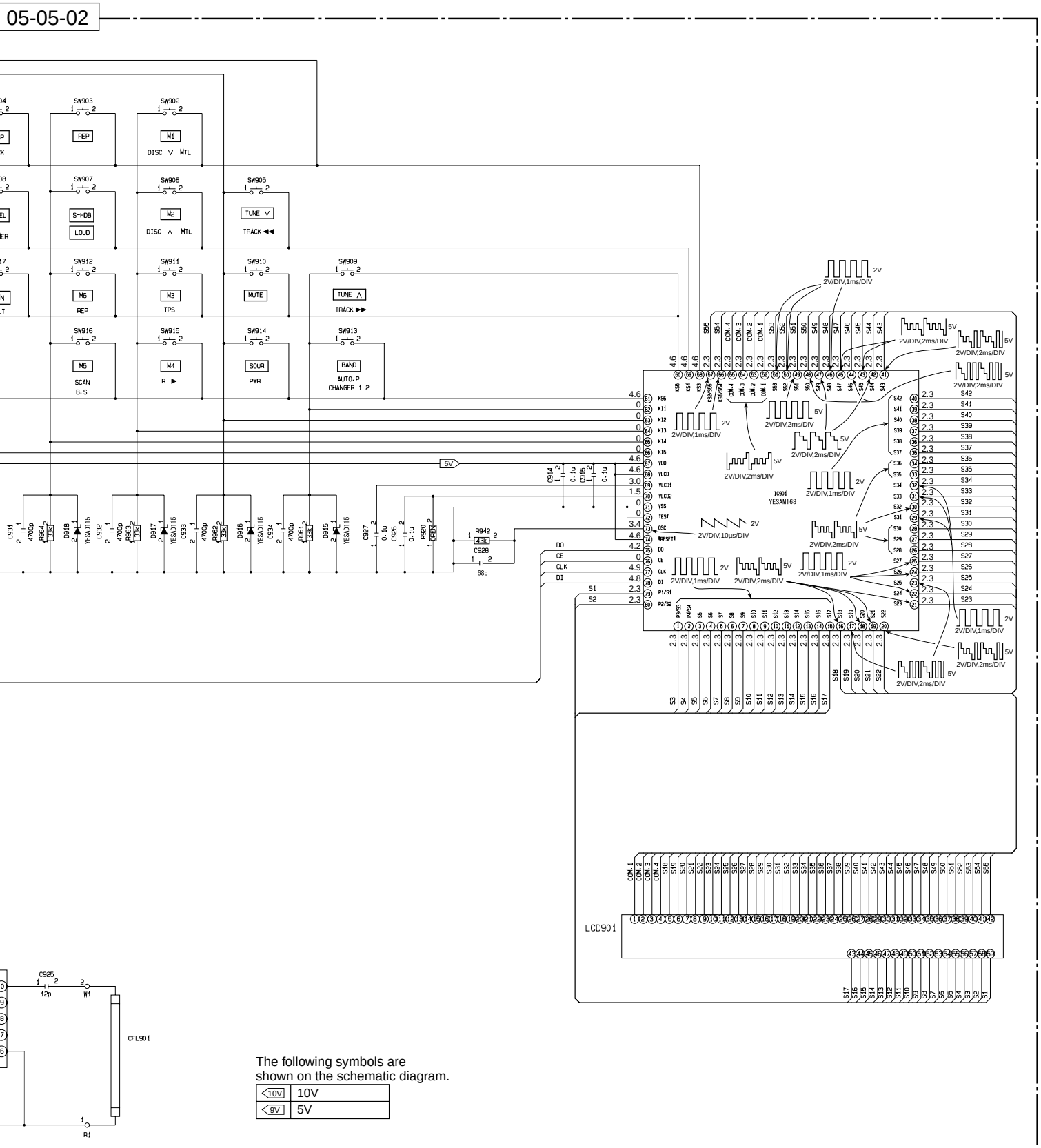


The following symbols are shown on the schematic diagram.

| | |
|---|---|
| 10V | 10V |
| 9V | 5V |

CQ-C5400N/CQ-C5300N/CQ-C5100N DISPLAY

# 23 SCHEMATIC DIAGRAM

## 23.1. Main Block [CQ-C5400N/CQ-C5300N]

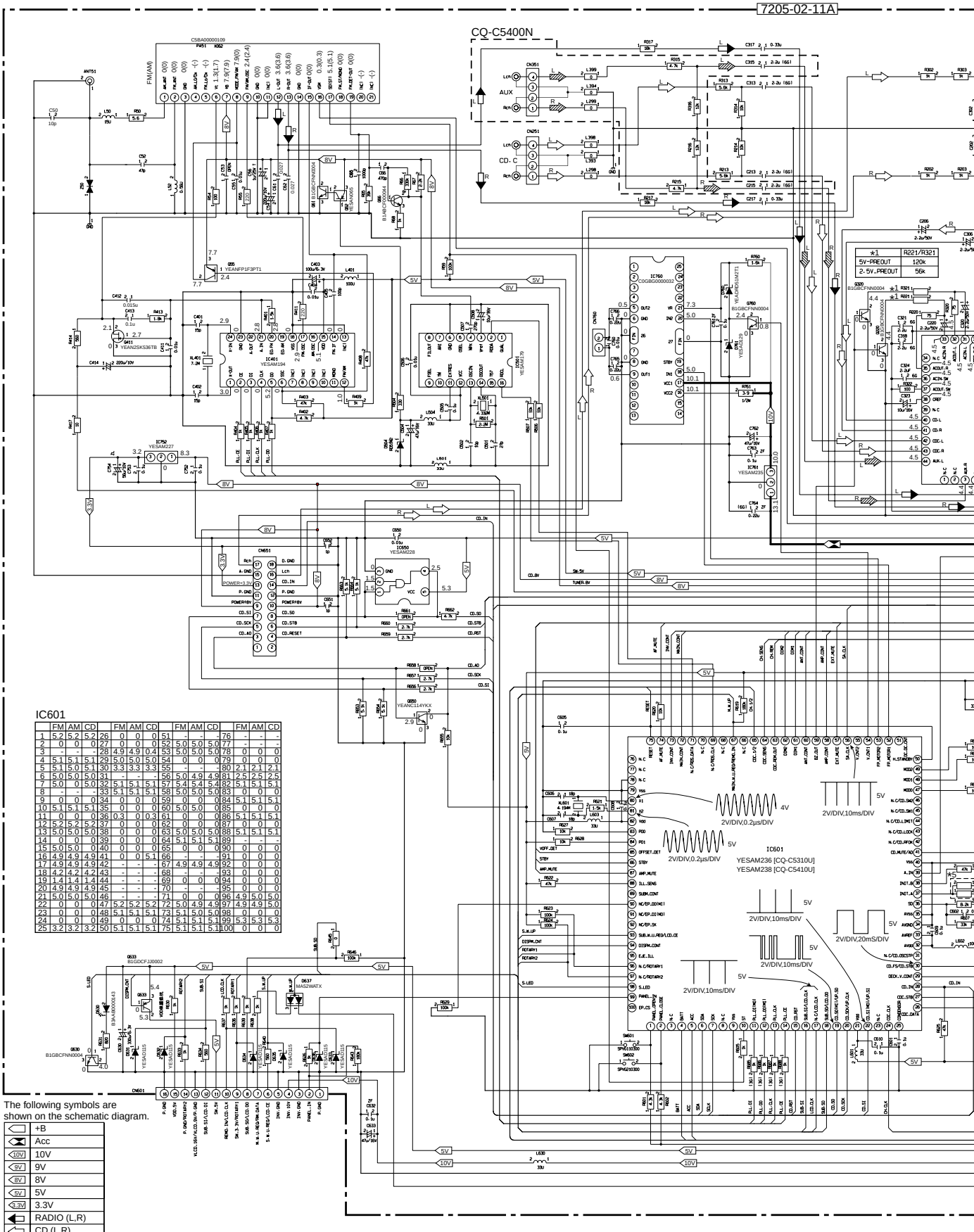


IC601

| | FM | AM | CD | | FM | AM | CD | | FM | AM | CD | | FM | AM | CD |
|---|---|---|---|---|---|---|---|---|---|---|---|---|---|---|---|
| 1 | 5.2 | 5.2 | 5.2 | 26 | 0 | 0 | 0 | 51 | - | - | - | 76 | - | - | - |
| 2 | 0 | 0 | 0 | 27 | 0 | 0 | 0 | 52 | 5.0 | 5.0 | 5.0 | 77 | - | - | - |
| 3 | | - | - | 28 | 4.9 | 4.9 | 0.4 | 53 | 5.0 | 5.0 | 5.0 | 78 | 0 | 0 | 0 |
| 4 | 5.1 | 5.1 | 5.1 | 29 | 5.0 | 5.0 | 5.0 | 54 | - | 0 | 0 | 79 | 0 | 0 | 0 |
| 5 | 5.1 | 5.0 | 5.1 | 30 | 3.3 | 3.3 | 3.3 | 55 | - | - | - | 80 | 2.1 | 2.1 | 2.1 |
| 6 | 5.0 | 5.0 | 5.0 | 31 | - | - | - | 56 | 5.0 | 4.9 | 4.9 | 81 | 2.5 | 2.5 | 2.5 |
| 7 | 5.0 | 0 | 5.0 | 32 | 5.1 | 5.1 | 5.1 | 57 | 5.4 | 5.4 | 5.4 | 82 | 5.1 | 5.1 | 5.1 |
| 8 | - | - | - | 33 | 5.1 | 5.1 | 5.1 | 58 | 5.0 | 5.0 | 5.0 | 83 | 0 | 0 | 0 |
| 9 | 0 | 0 | 0 | 34 | 0 | 0 | 0 | 59 | 0 | 0 | 0 | 84 | 5.1 | 5.1 | 5.1 |
| 10 | 5.1 | 5.1 | 5.1 | 35 | 0 | 0 | 0 | 60 | 5.0 | 5.0 | 5.0 | 85 | 0 | 0 | 0 |
| 11 | 0 | 0 | 0 | 36 | 0.3 | 0 | 0.3 | 61 | - | 0 | 0 | 86 | 5.1 | 5.1 | 5.1 |
| 12 | 5.2 | 5.2 | 5.2 | 37 | 0 | 0 | 0 | 62 | 0 | 0 | 0 | 87 | 0 | 0 | 0 |
| 13 | 5.0 | 5.0 | 5.0 | 38 | 0 | 0 | 0 | 63 | 5.0 | 5.0 | 5.0 | 88 | 5.1 | 5.1 | 5.1 |
| 14 | 0 | 0 | 0 | 39 | 0 | 0 | 0 | 64 | 5.1 | 5.1 | 5.1 | 89 | - | - | - |
| 15 | 5.0 | 5.0 | 0 | 40 | 0 | 0 | 0 | 65 | - | 0 | 0 | 90 | 0 | 0 | 0 |
| 16 | 4.9 | 4.9 | 4.9 | 41 | 0 | 0 | 5.1 | 66 | - | - | - | 91 | 0 | 0 | 0 |
| 17 | 4.9 | 4.9 | 4.9 | 42 | - | - | - | 67 | 4.9 | 4.9 | 4.9 | 92 | 0 | 0 | 0 |
| 18 | 4.2 | 4.2 | 4.2 | 43 | - | - | - | 68 | - | - | - | 93 | 0 | 0 | 0 |
| 19 | 1.4 | 1.4 | 1.4 | 44 | - | - | - | 69 | 0 | 0 | 0 | 94 | 0 | 0 | 0 |
| 20 | 4.9 | 4.9 | 4.9 | 45 | - | - | - | 70 | - | - | - | 95 | 0 | 0 | 0 |
| 21 | 5.0 | 5.0 | 5.0 | 46 | - | - | - | 71 | 0 | 0 | 0 | 96 | 4.9 | 5.0 | 5.0 |
| 22 | | 0 | 0 | 47 | 5.2 | 5.2 | 5.2 | 72 | 5.0 | 4.9 | 4.9 | 97 | 4.9 | 4.9 | 5.0 |
| 23 | 0 | 0 | 0 | 48 | 5.1 | 5.1 | 5.1 | 73 | 5.1 | 5.0 | 5.0 | 98 | 0 | 0 | 0 |
| 24 | 0 | 0 | 0 | 49 | 0 | 0 | 0 | 74 | 5.1 | 5.1 | 5.1 | 99 | 5.3 | 5.3 | 5.3 |
| 25 | 3.2 | 3.2 | 3.2 | 50 | 5.1 | 5.1 | 5.1 | 75 | 5.1 | 5.1 | 5.1 | 100 | 0 | 0 | 0 |

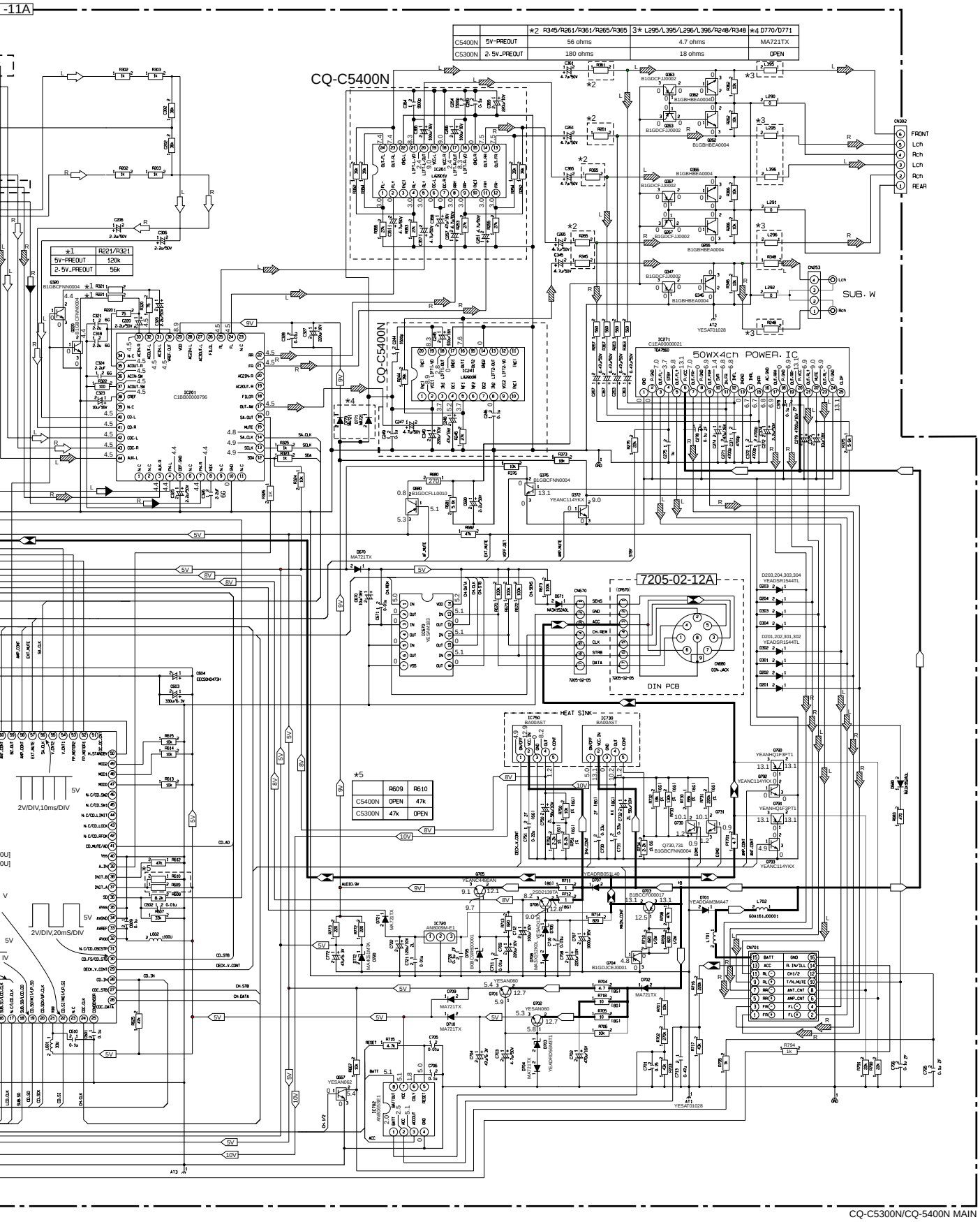


| | | *2 R345/R261/R361/R265/R365 | 3* L295/L395/L296/L396/R248/R348 | *4 D770/D771 |
|---|---|---|---|---|
| C5400N | 5V-PREOUT | 56 ohms | 4.7 ohms | MA721TX |
| C5300N | 2.5V_PREOUT | 180 ohms | 18 ohms | OPEN |

| *1 | R221/R321 |
|---|---|
| 5V-PREOUT | 120k |
| 2.5V_PREOUT | 56k |

| *5 | R609 | R610 |
|---|---|---|
| C5400N | OPEN | 47k |
| C5300N | 47k | OPEN |

CQ-C5300N/CQ-5400N MAIN

# 23.2. Main Block [CQ-C5100N]

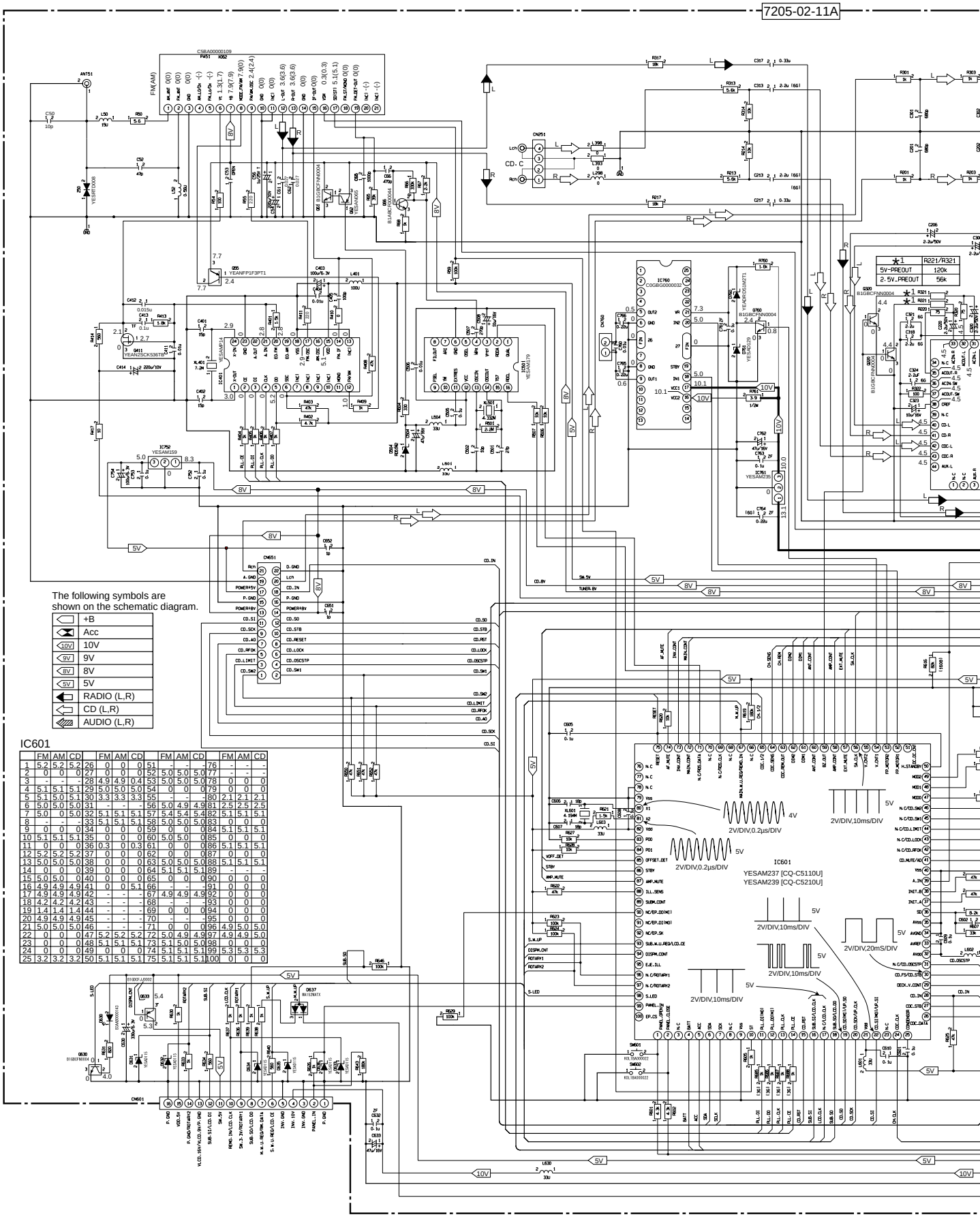


IC601

| | FM | AM | CD | | FM | AM | CD | | FM | AM | CD | | FM | AM | CD |
|---|---|---|---|---|---|---|---|---|---|---|---|---|---|---|---|
| 1 | 5.2 | 5.2 | 5.2 | 26 | 0 | 0 | 0 | 51 | - | - | - | 76 | - | - | - |
| 2 | 0 | 0 | 0 | 27 | 0 | 0 | 0 | 52 | 5.0 | 5.0 | 5.0 | 77 | - | - | - |
| 3 | - | - | - | 28 | 4.9 | 4.9 | 0.4 | 53 | 5.0 | 5.0 | 5.0 | 78 | 0 | 0 | 0 |
| 4 | 5.1 | 5.1 | 5.1 | 29 | 5.0 | 5.0 | 5.0 | 54 | 0 | 0 | 0 | 79 | 0 | 0 | 0 |
| 5 | 5.1 | 5.0 | 5.1 | 30 | 3.3 | 3.3 | 3.3 | 55 | - | - | - | 80 | 2.1 | 2.1 | 2.1 |
| 6 | 5.0 | 5.0 | 5.0 | 31 | - | - | - | 56 | 5.0 | 4.9 | 4.9 | 81 | 2.5 | 2.5 | 2.5 |
| 7 | 5.0 | 0 | 5.0 | 32 | 5.1 | 5.1 | 5.1 | 57 | 5.4 | 5.4 | 5.4 | 82 | 5.1 | 5.1 | 5.1 |
| 8 | - | - | - | 33 | 5.1 | 5.1 | 5.1 | 58 | 5.0 | 5.0 | 5.0 | 83 | 0 | 0 | 0 |
| 9 | 0 | 0 | 0 | 34 | 0 | 0 | 0 | 59 | 0 | 0 | 0 | 84 | 5.1 | 5.1 | 5.1 |
| 10 | 5.1 | 5.1 | 5.1 | 35 | 0 | 0 | 0 | 60 | 5.0 | 5.0 | 0 | 85 | 0 | 0 | 0 |
| 11 | 0 | 0 | 0 | 36 | 0.3 | 0 | 0.3 | 61 | 0 | 0 | 0 | 86 | 5.1 | 5.1 | 5.1 |
| 12 | 5.2 | 5.2 | 5.2 | 37 | 0 | 0 | 0 | 62 | 0 | 0 | 0 | 87 | 0 | 0 | 0 |
| 13 | 5.0 | 5.0 | 5.0 | 38 | 0 | 0 | 0 | 63 | 5.0 | 5.0 | 5.0 | 88 | 5.1 | 5.1 | 5.1 |
| 14 | 0 | 0 | 0 | 39 | 0 | 0 | 0 | 64 | 5.1 | 5.1 | 5.1 | 89 | - | - | - |
| 15 | 5.0 | 5.0 | 0 | 40 | 0 | 0 | 0 | 65 | 0 | 0 | 0 | 90 | 0 | 0 | 0 |
| 16 | 4.9 | 4.9 | 4.9 | 41 | 0 | 0 | 5.1 | 66 | - | - | - | 91 | 0 | 0 | 0 |
| 17 | 4.9 | 4.9 | 4.9 | 42 | - | - | - | 67 | 4.9 | 4.9 | 4.9 | 92 | 0 | 0 | 0 |
| 18 | 4.2 | 4.2 | 4.2 | 43 | - | - | - | 68 | - | - | - | 93 | 0 | 0 | 0 |
| 19 | 1.4 | 1.4 | 1.4 | 44 | - | - | - | 69 | 0 | 0 | 0 | 94 | 0 | 0 | 0 |
| 20 | 4.9 | 4.9 | 4.9 | 45 | - | - | - | 70 | - | - | - | 95 | 0 | 0 | 0 |
| 21 | 5.0 | 5.0 | 5.0 | 46 | - | - | - | 71 | 0 | 0 | 0 | 96 | 4.9 | 5.0 | 5.0 |
| 22 | 0 | 0 | 0 | 47 | 5.2 | 5.2 | 5.2 | 72 | 5.0 | 4.9 | 4.9 | 97 | 4.9 | 4.9 | 5.0 |
| 23 | 0 | 0 | 0 | 48 | 5.1 | 5.1 | 5.1 | 73 | 5.1 | 5.0 | 5.0 | 98 | 0 | 0 | 0 |
| 24 | 0 | 0 | 0 | 49 | 0 | 0 | 0 | 74 | 5.1 | 5.1 | 5.1 | 99 | 5.3 | 5.3 | 5.3 |
| 25 | 3.2 | 3.2 | 3.2 | 50 | 5.1 | 5.1 | 5.1 | 75 | 5.1 | 5.1 | 5.1 | 100 | 0 | 0 | 0 |

| | | *2 R261/R361/R265/R365 | *3 L295/L395/L396/R348 | *4 D770/D771 |
|---|---|---|---|---|
| C5100N | 2.5V_PREOUT | 180 ohms | 18 ohms | OPEN |

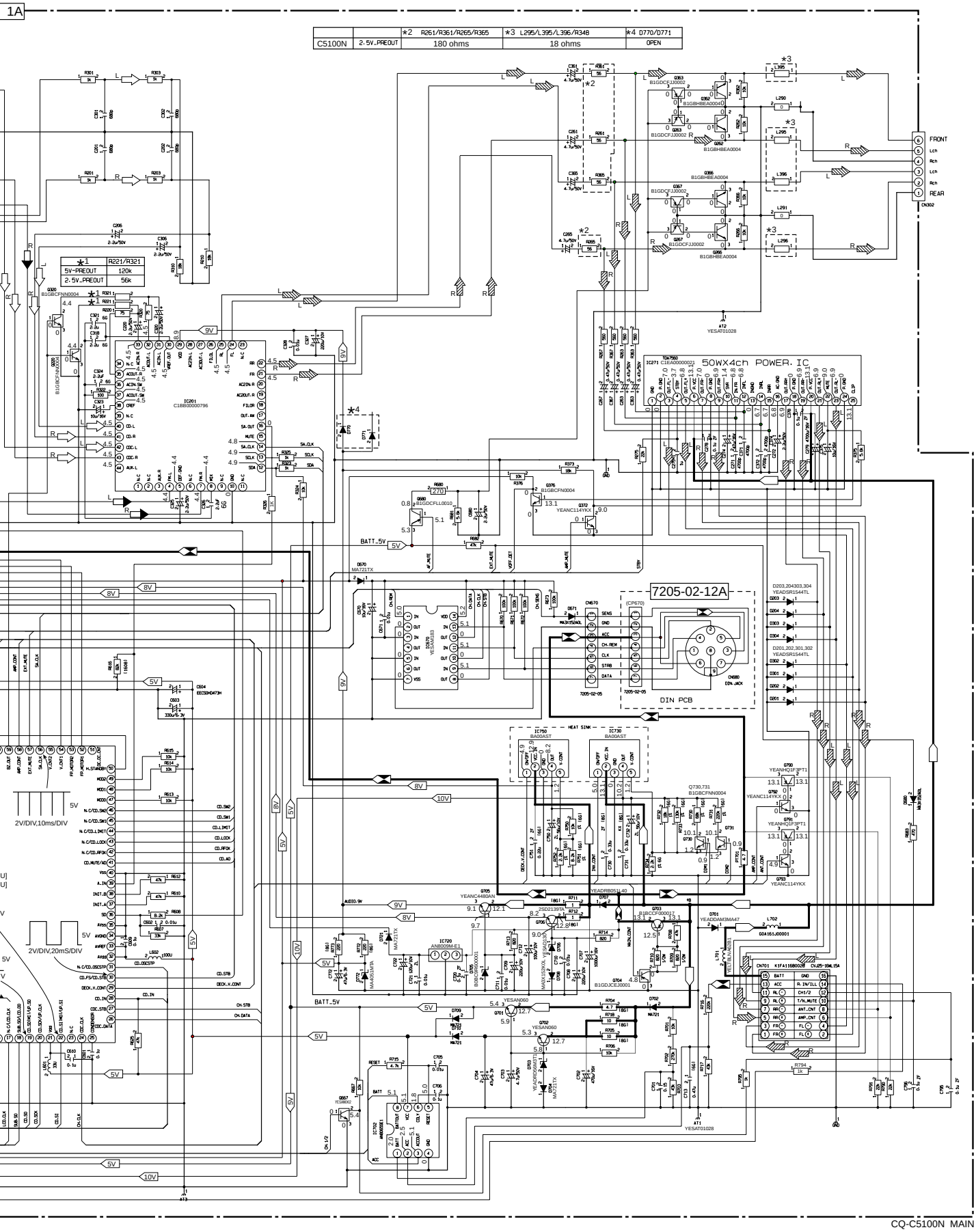


CQ-C5100N MAIN

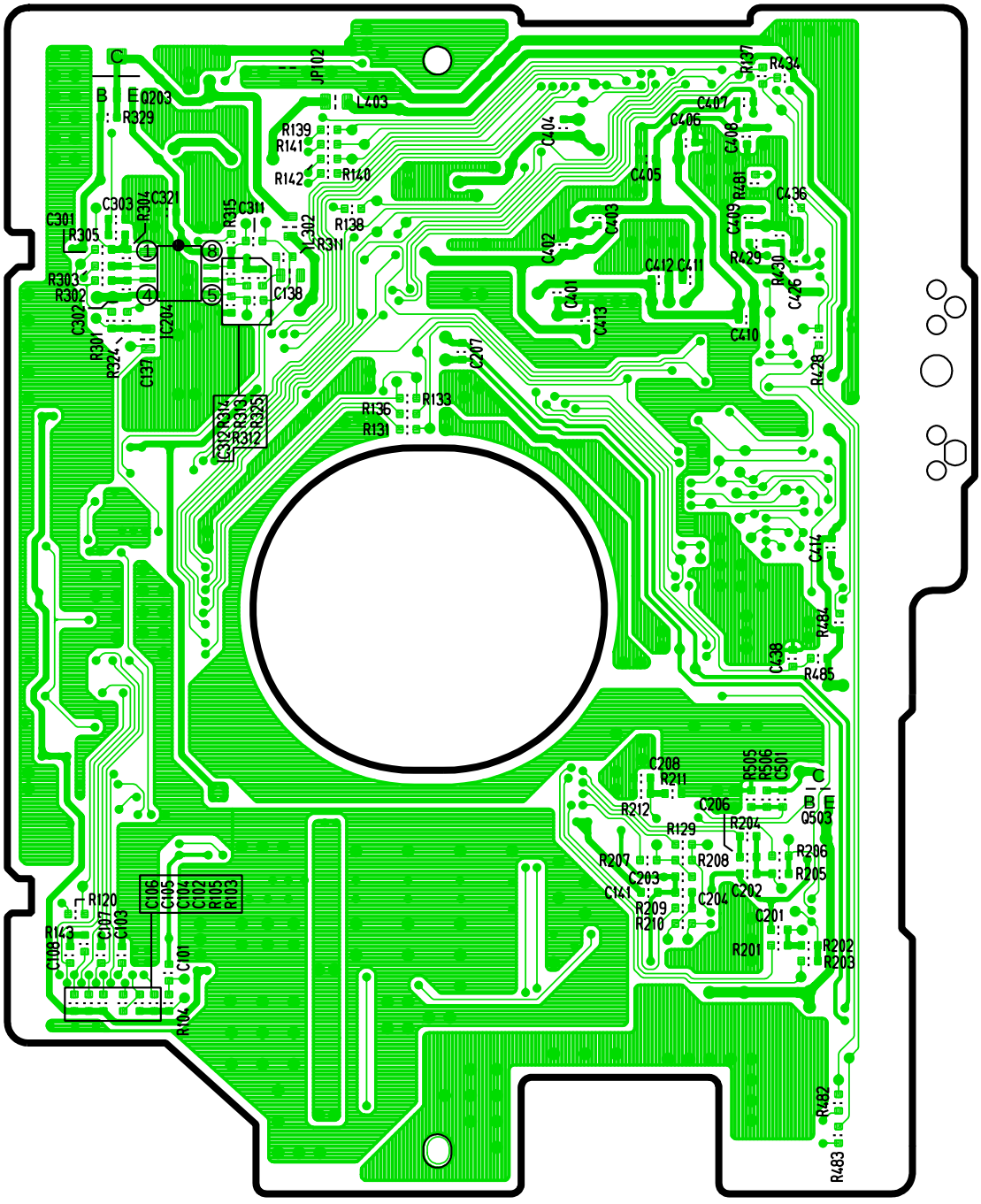


[3032-14-05] [Bottom View]

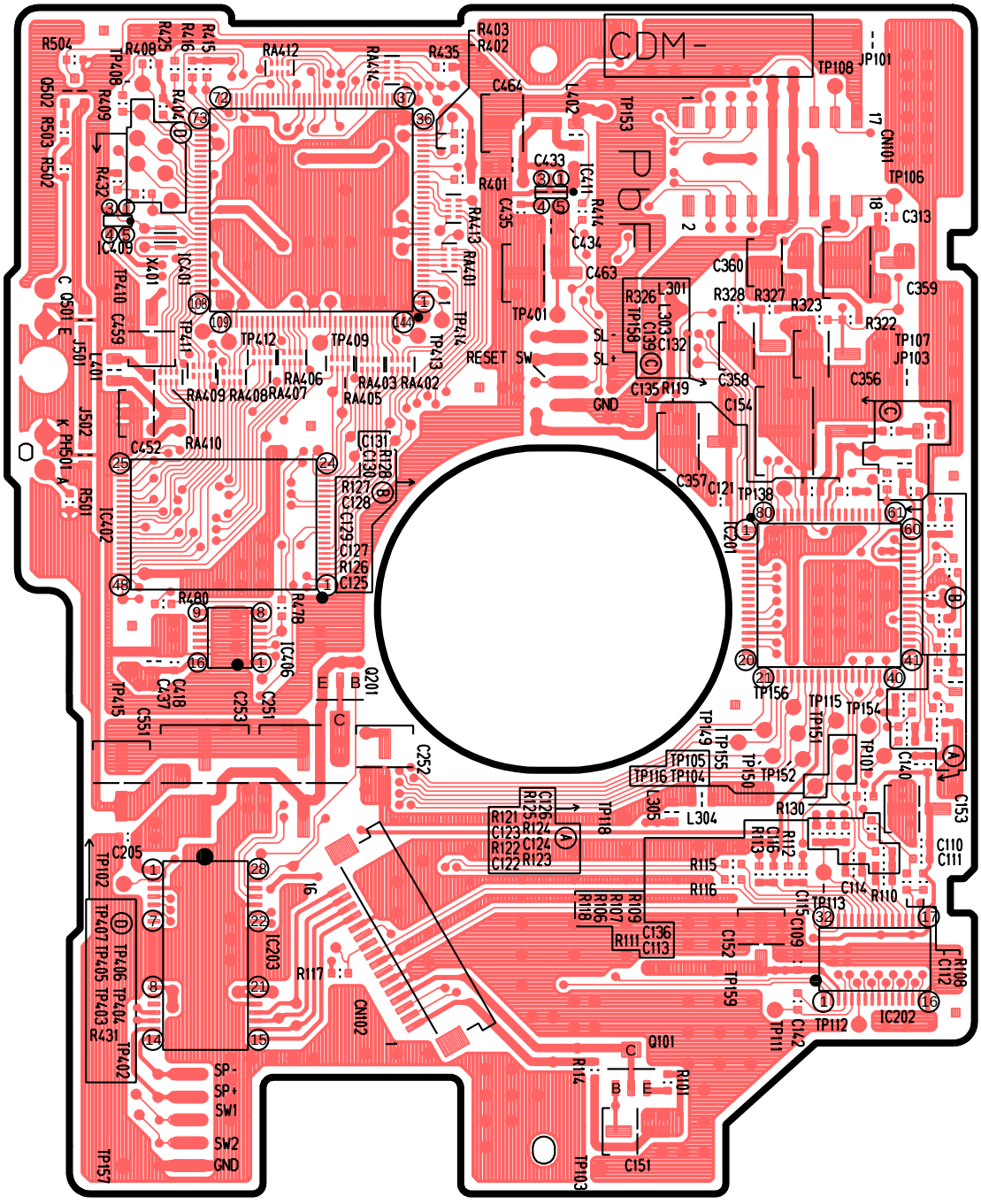


[3032-14-05] [Top View]

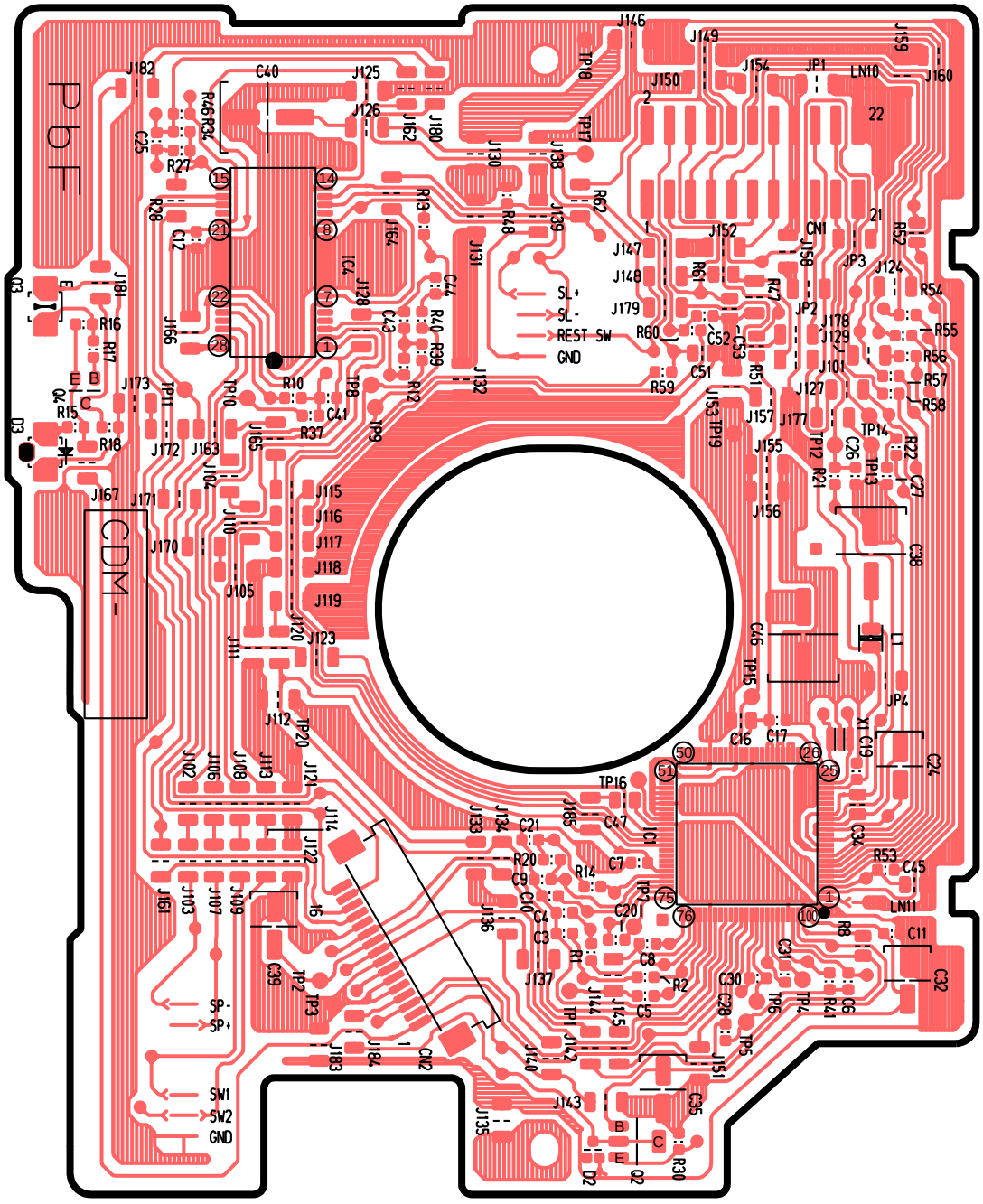


[3032-14-07] [Top View]

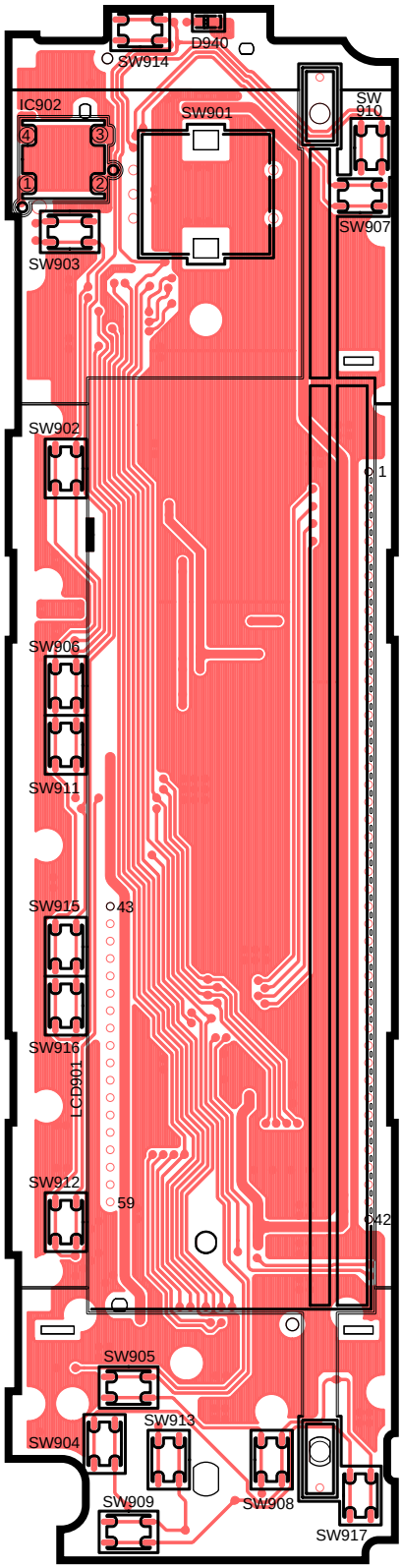


[7205-05-02] [Top View]

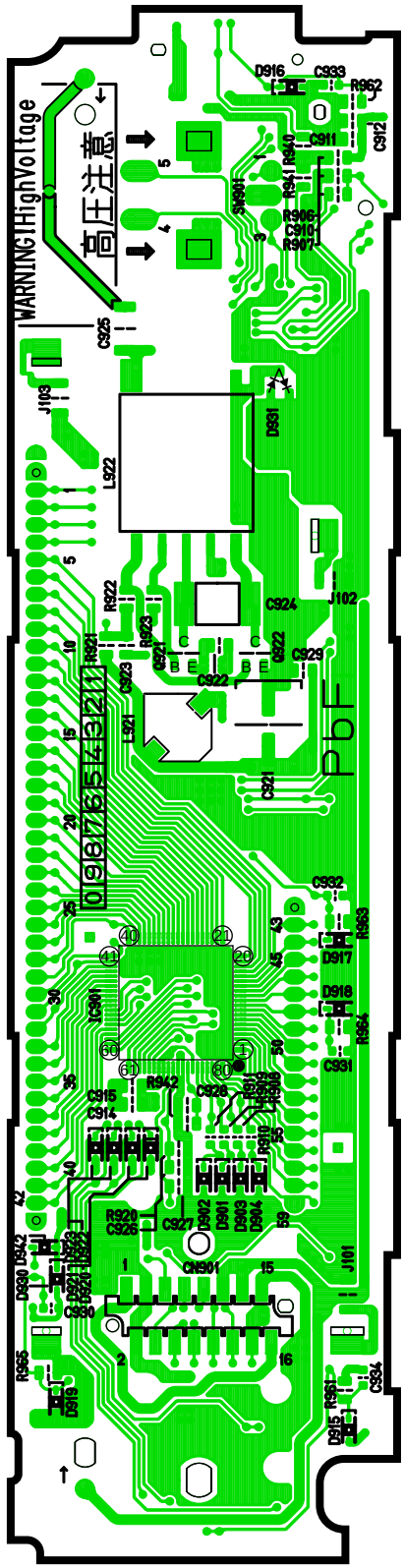


[7205-05-02] [Bottom View]

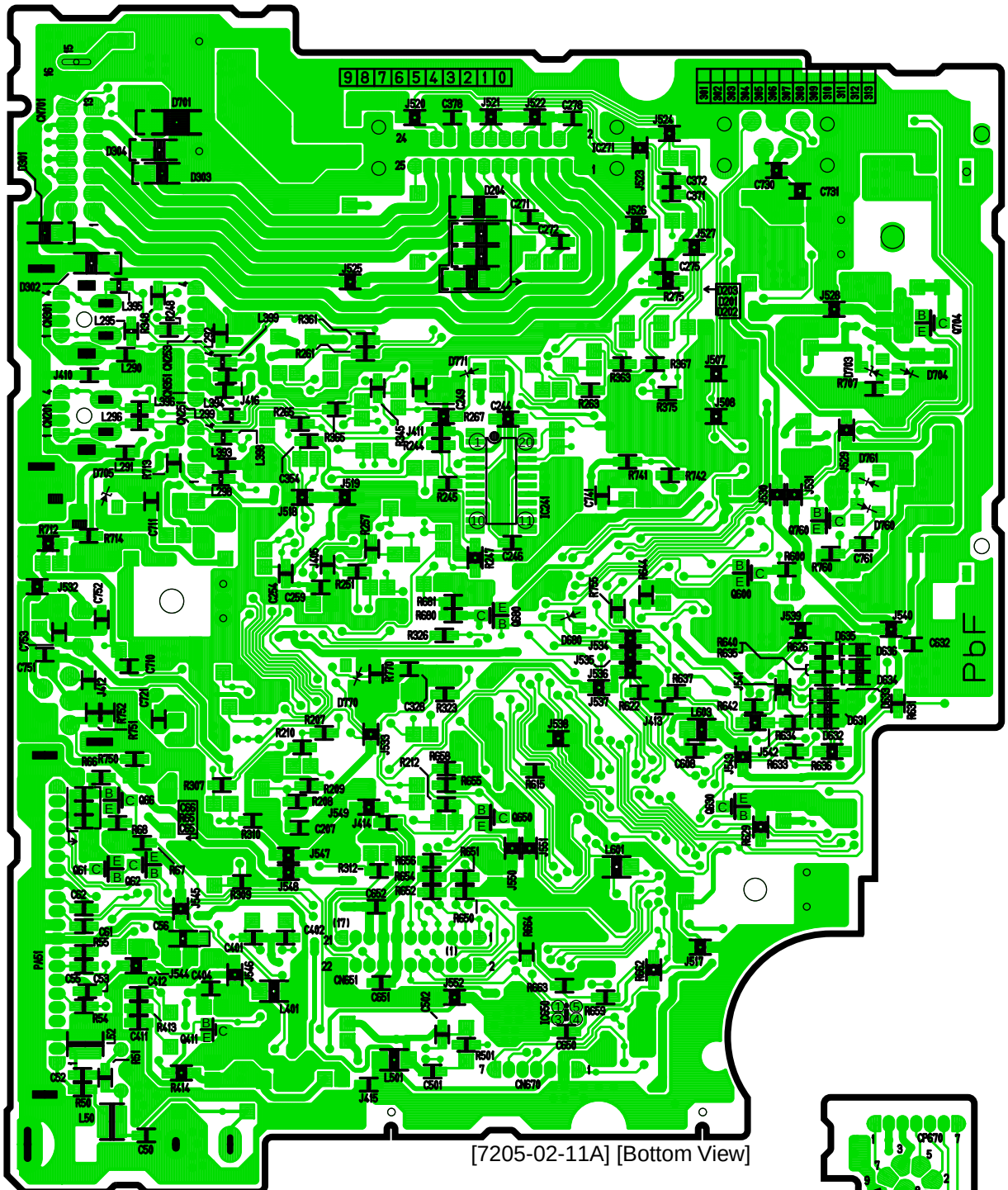


[7205-02-11A] [Bottom View]

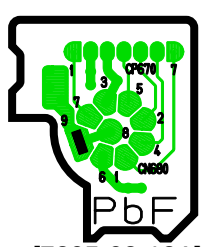


[7205-02-12A]
[Bottom View]

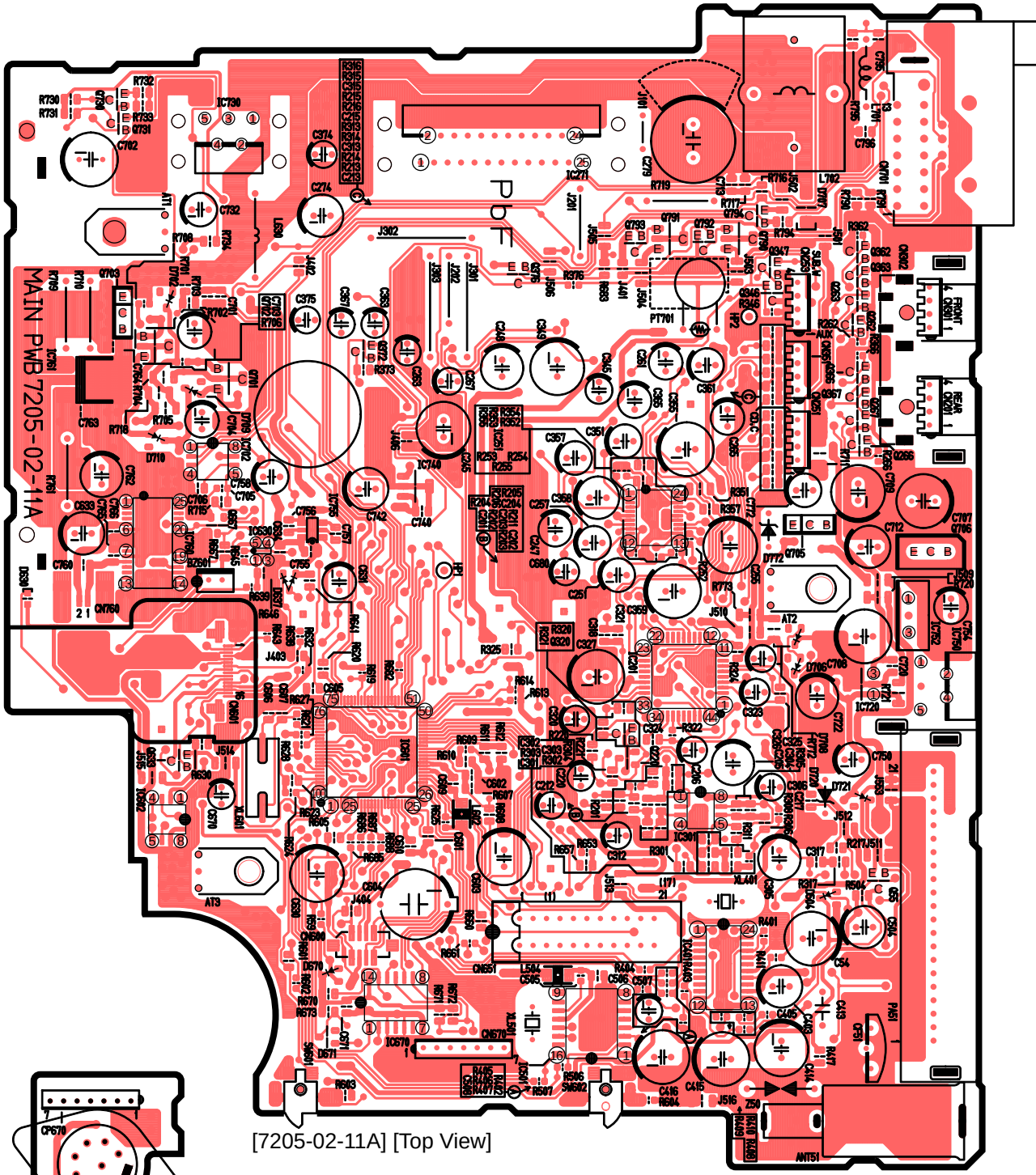


[7205-02-11A] [Top View]

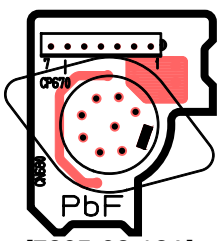


[7205-02-12A]
[Top View]

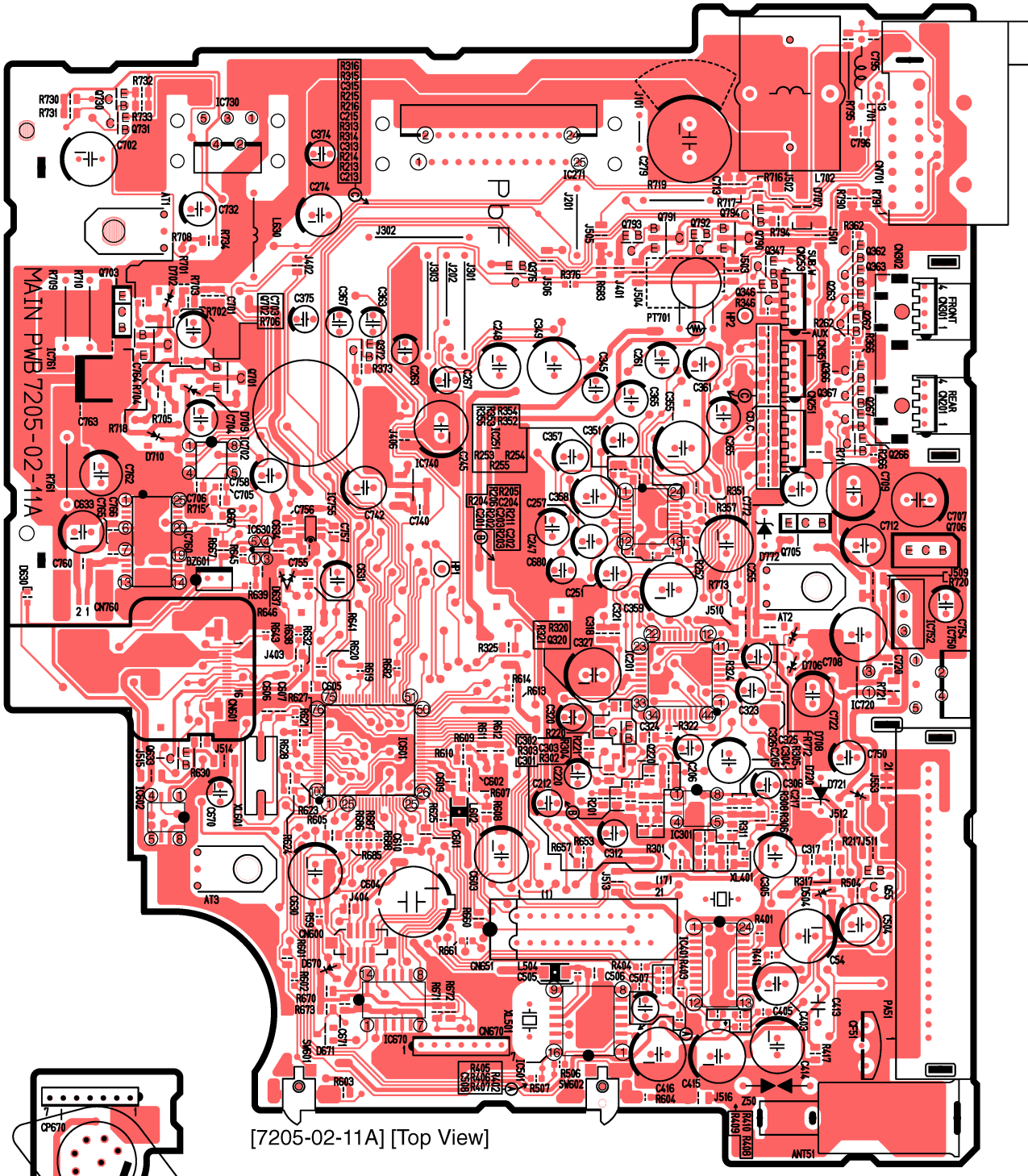


[7205-02-11A] [Top View]

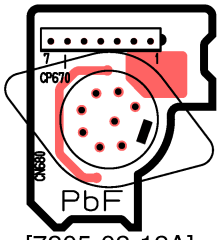


[7205-02-12A]
[Top View]

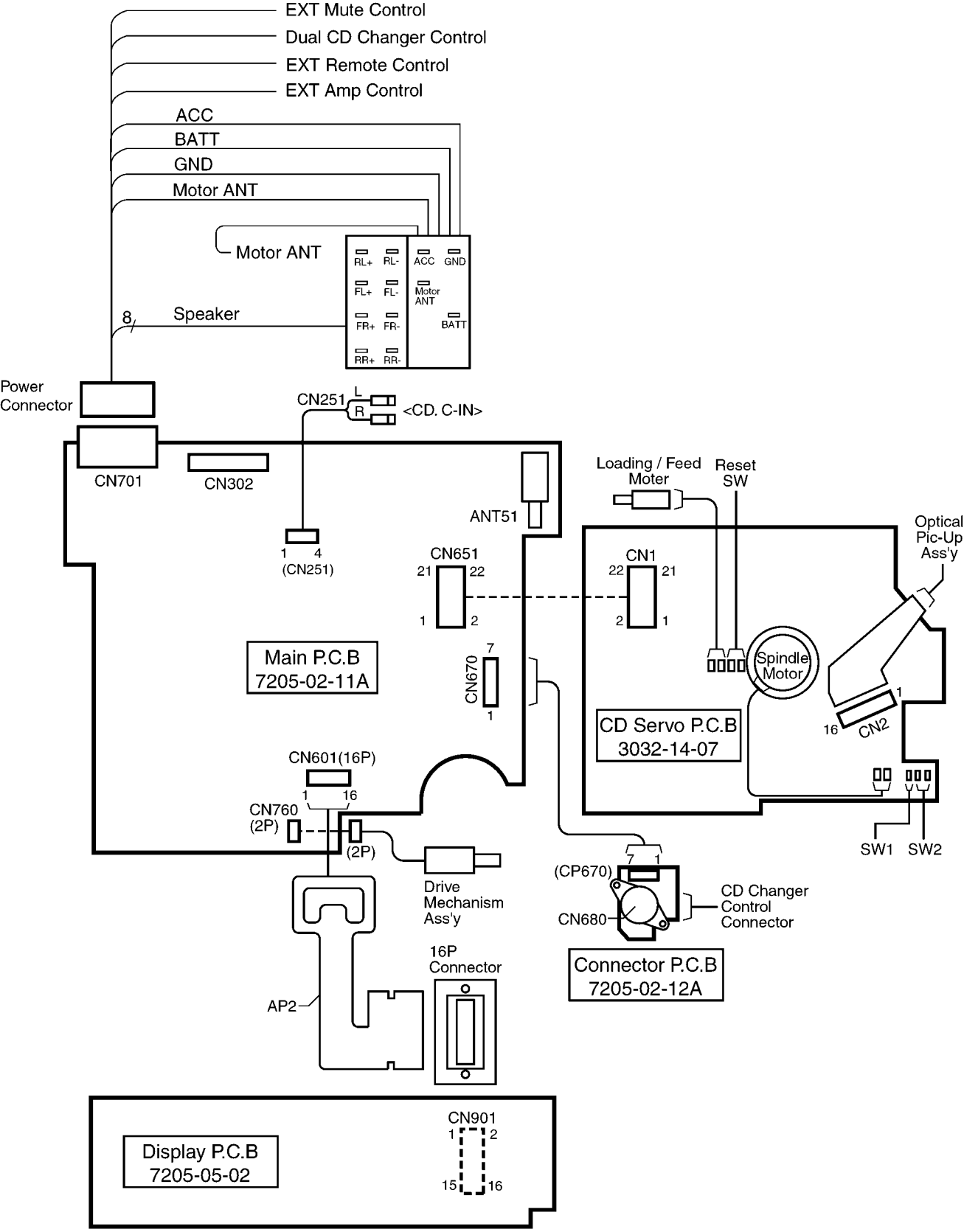


<Note>

.....This mark shows a Ref. No. of connector

.....This mark shows a mounting position of connector

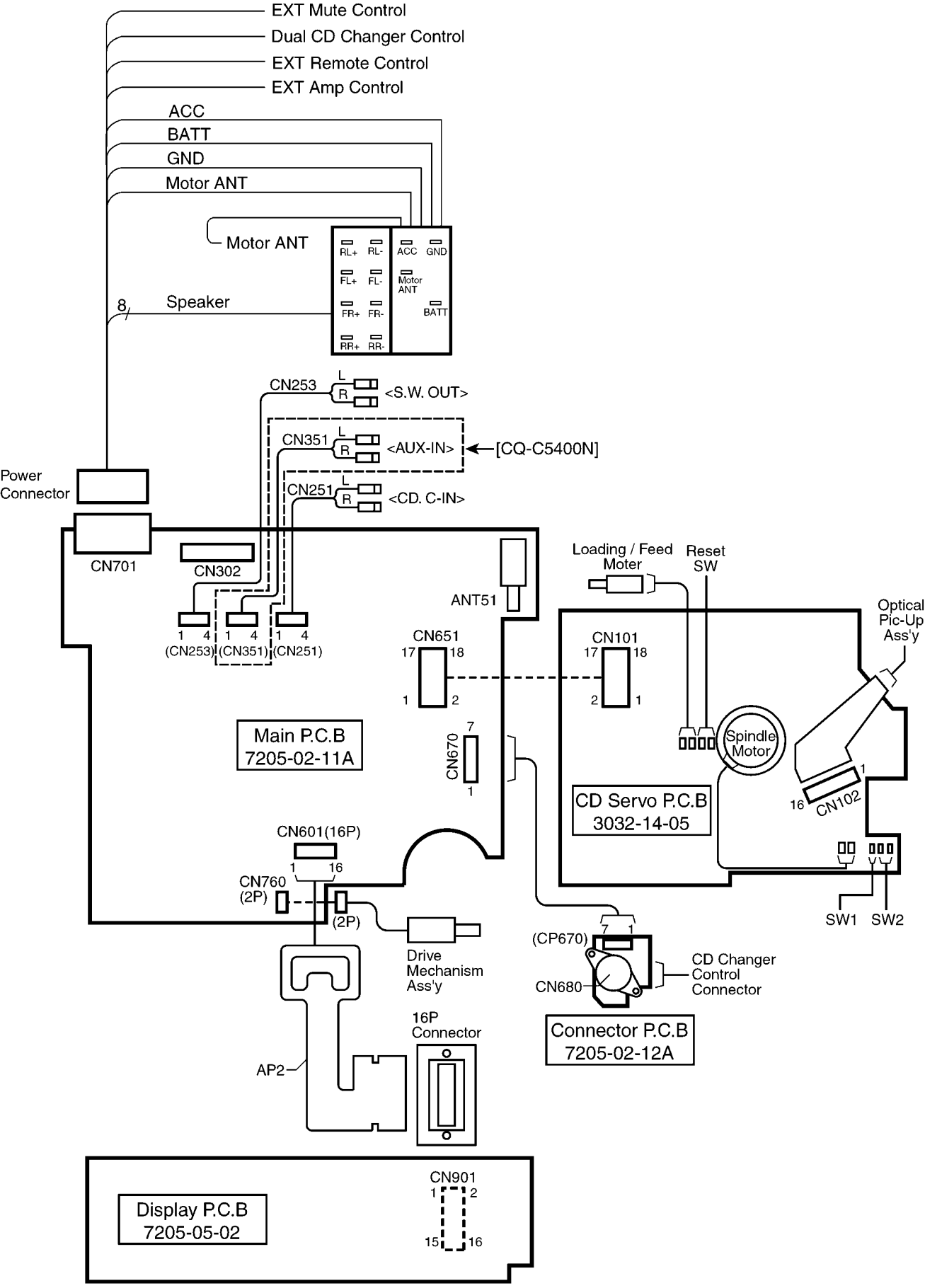
EXT Mute Control
Dual CD Changer Control
EXT Remote Control
EXT Amp Control
ACC
BATT
GND
Motor ANT
Motor ANT
RL+
RL-
ACC
GND
FL+
FL-
Motor ANT
FR+
FR-
BATT
RR+
RR-
8
Speaker
CN253
L
R
<S.W. OUT>
CN351
<AUX-IN>
[CQ-C5400N]
CN251
<CD. C-IN>
Power Connector
CN701
CN302
ANT51
1 4 (CN253)
1 4 (CN351)
1 4 (CN251)
CN651
17 18
1 2
Main P.C.B
7205-02-11A
CN670
7
1
Loading / Feed Moter
Reset SW
CN101
17 18
2 1
Spindle Motor
Optical Pic-Up Ass'y
CD Servo P.C.B
3032-14-05
1
16
CN102
SW1
SW2
CN601(16P)
1 16
CN760 (2P)
(2P)
Drive Mechanism Ass'y
(CP670)
7 1
CN680
CD Changer Control Connector
Connector P.C.B
7205-02-12A
16P Connector
AP2
Display P.C.B
7205-05-02
CN901
1 2
15 16
<Note>
.....This mark shows a Ref. No. of connector
.....This mark shows a mounting position of connector