CORDING OF DIAL DRIVE

Note: 1 turn of dial cord around tuning spindle drive pulley increased to 2 turns.

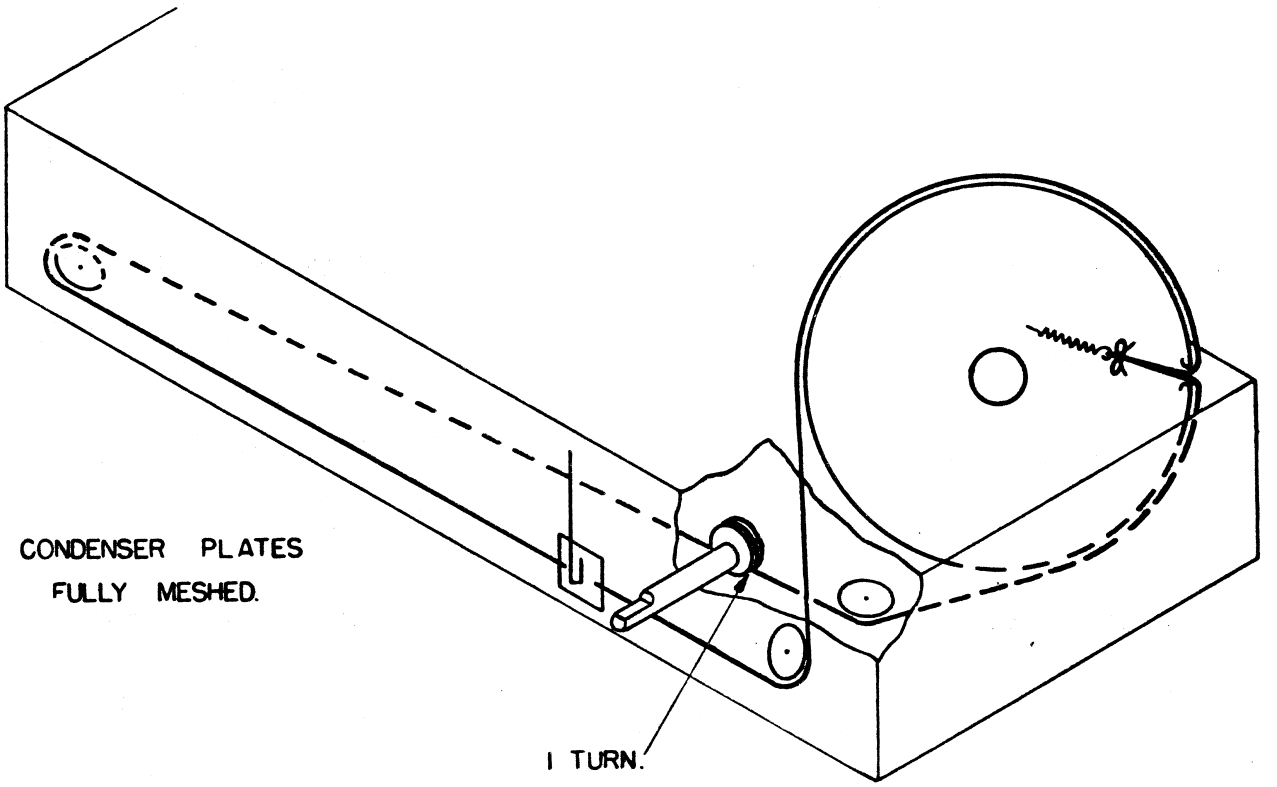

Length of cord required is 5 ft. 6 ins. which includes about 6 ins. to spare for tying to the tension spring.

Cord Part No. 34/754.
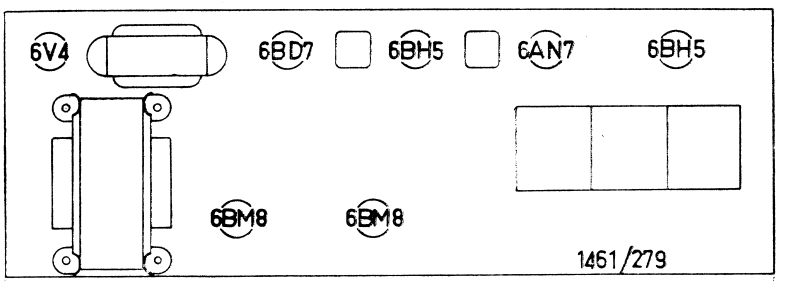
Tension Spring Part No. 21/698.