MODEL—BNS

I.F. 455 Kc/s.

PB 912

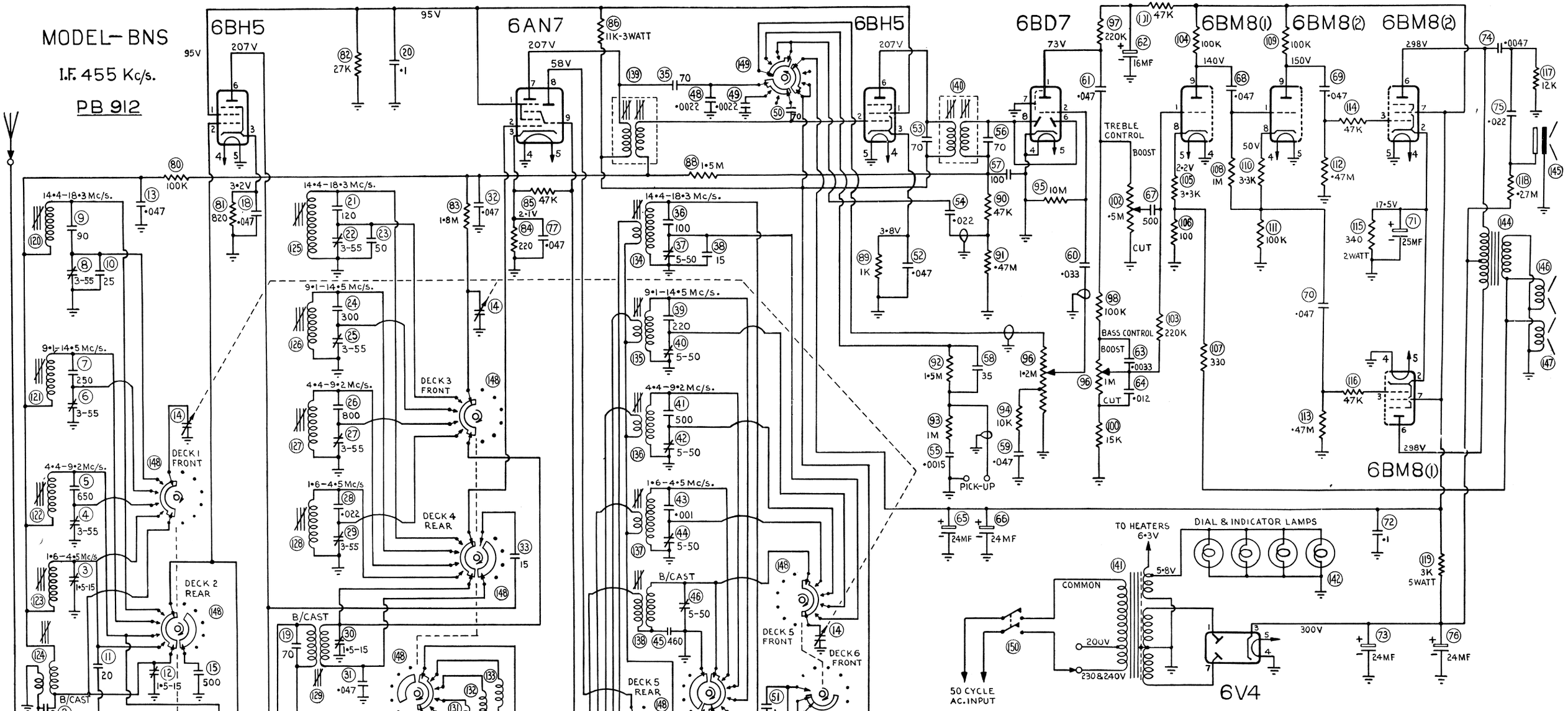

DC. VOLTAGES ON CIRCUIT ARE MEASURED BETWEEN POINTS INDICATED AND CHASSIS WITH A DC. VACUUM TUBE VOLTMETER—230V. 50 CYCLE AC. INPUT TO POWER TRANS. 230-240V. PRI. TAP—WHEN MEASURING VOLTAGES IN HIGH IMPED. CIRCUITS—LOWER READINGS THAN THOSE SHOWN WILL BE OBTAINED—IF A V.T.V.M. IS NOT USED—DEPENDING ON THE RESISTANCE OF THE METER USED. E.G. 1000Ω/VOLT OR 20,000Ω/VOLT.

GRAMO—RADIO SWITCH SHOWN IN RADIO WIDE BANDWIDTH POSITION.

POSITION :-

1. RADIO-WIDE BANDWIDTH
2. RADIO-NORMAL BANDWIDTH
3. GRAMO-PICK UP INPUT

WAVE CHANGE SWITCH IN B/CAST POSITION.

POSITION :-

1. B/CAST BAND
2. 1·6 – 4·5 Mc/s
3. 4·4 – 9·2 Mc/s
4. 9·1 – 14·5 Mc/s
5. 14·4 – 18·3 Mc/s