TECHNICAL INFORMATION AND SERVICE DATA

MANUFACTURERS AWA SUPERVISED SERVICE

Issued by Amalgamated Wireless (Australasia) Limited

AWA
SOLID STATE
13 WATT CONSOLE STEREOGRAM UNIT
MODELS B83 AND B83Z

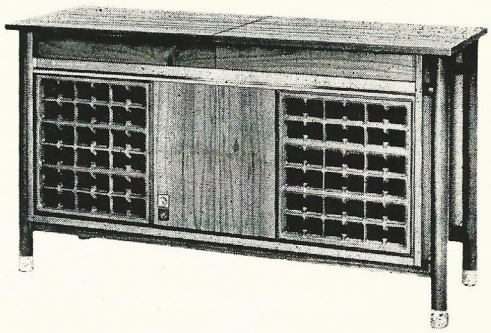

These models differ only in the type of record changer fitted.
B83 uses MA70
B83Z uses C117-A-1

SPECIFICATION:

AMPLIFIERS

Type:

Wide range quasi-complementary symmetry push-pull output stage with direct coupling and temperature stabilisation.

Special low noise pre-amplifier circuit feeding passive tone controls.

Semiconductors	16 transistors and 6 diodes
Peak Music Power	60 watts total
Output Power	13 watts r.m.s./channel
Distortion:	
6W r.m.s./channel	Less than 0.5%
10W r.m.s./channel	Less than 1%
Frequency Response	30Hz to 20kHz
Treble Control Range	26db at 10kHz
Bass Control Range	20db at 50Hz
Loudness Contour Range	6db at 10kHz 6db at 60Hz
Presence Control Range	6db at 5kHz
Power Consumption	40 watts

TUNER

Solid state with in-built ferrite rod aerial for low noise reception.

Semiconductors	3 transistors and 3 diodes
Intermediate Frequency	455kHz
Frequency Range	525-1650kHz

PLUGS AND SOCKETS

(a) **Tape Socket**

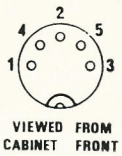

Pin 1 Record LH } Output = 0.2V r.m.s.
Pin 4 Record RH } Load: Not less than 10KΩ.
Pin 2 Earth
Pin 3 Playback LH } 1V r.m.s. required for full output.
Pin 5 Playback RH } Input Imp.: 22KΩ.

(b) **Phones Jack**

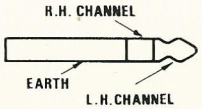

The circuitry is designed for headphone impedances from 8Ω to 600Ω.

N.B.: On some early stereograms the wiring of the phones jack was reversed to that indicated above and on the circuit.

(c) **Mic Jack** The circuitry is designed for low impedance microphones. (200Ω or less.)

RECORD CHANGER

Type	4 speed automatic
Driving System	Rimdrive
Cartridge Type	Ceramic
Stylus Force	5 grammes (nominal)
Power Consumption	20 watts

OPERATING VOLTAGE

Range	200-265V a.c.
Nominal Taps Provided	240 and 254V a.c.
Frequency	50Hz

DIMENSIONS

Height	28″ (71 cms.)
Width	51″ (129.5 cms.)
Depth	17¾″ (45 cms.)
Weight (packed)	137 lbs. (62.2 kgms.)

CHASSIS REMOVAL

1. Remove the top right hand section of the cabinet back.
2. Remove the necessary nuts or screws to release the speaker socket and power supply. Unclip interconnecting leads.
3. Unplug the record changer power and pick-up leads, also the light leads and speaker leads.
4. Remove the pull-off knobs from all controls except the press buttons.
5. The escutcheon is held in place by two internal spring-loaded pins located at each short edge of the escutcheon.
   Remove the escutcheon as follows:
   (a) Place fingers in the Tape and Phones opening, pull escutcheon towards the Power Switch end and spring that edge clear of the pins.
   (b) With escutcheon held just high enough to clear push-buttons, slide escutcheon in opposite direction to free that edge.
6. Remove the screws holding the chassis in place.
7. Lift the chassis and power supply out of the cabinet, taking care not to mark the cabinet.

REPLACING A CHASSIS

Reassembling the chassis into the cabinet is the reverse of the above procedure, but the following precautions should be taken:

(a) It is important that the chassis is fitted centrally and squarely into the cabinet.
(b) For units with removable escutcheon spring clip assemblies:
Position the chassis and loosely fit the spring clips and mounting screws. Pull the spring clip brackets towards each other (i.e. inwards) and tighten the screws.
(c) Connect up all leads but ensure that correct phasing of the pick-up leads is maintained by referring to the colour coding of leads.
(d) Check pointer travel and calibration. This can be done by holding the escutcheon in position and adjusting the pointer where necessary.

RECORD CHANGER REMOVAL

1. Remove the top right hand section of the cabinet back.
2. Unplug the record changer power lead and pick-up leads.
3. Screw the record changer mounting screws in and secure the pick-up arm. Hinge the retaining clips parallel to the mounting screws.
4. Lift the record changer clear.

DIAL CORD REPLACEMENT

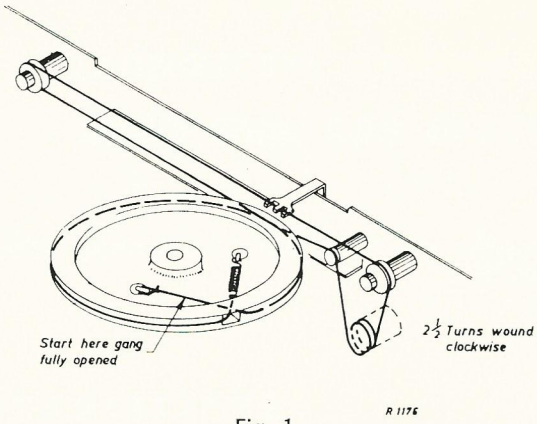

Fig. 1

Figure 1 shows the route of the dial cord and the method of attachment. A minimum of 35 inches of dial cord will be necessary.

ALIGNMENT PROCEDURE

Testing Instruments:

I.F. Alignment Tool No. 39463.

Signal Generator (modulated with 400 Hz) or Modulated Oscillator.

If a modulated oscillator is used, connect a 220K ohms non-inductive resistor across its output terminal.

Output Meter—8 ohms impedance:

To avoid damage to output transistors and associated circuitry when the chassis is being tested, it is advisable to provide a load on both amplifiers. An 8 ohm 10 watt resistor should thus be connected to the amplifier which is not loaded with the output meter.

Set balance control to that position which gives maximum audio output on the output meter.

For all alignment operations keep generator output as low as possible to avoid a.g.c. action and set volume control to maximum position.

ALIGNMENT TABLE

ORDER	CONNECT GENERATOR TO:	TUNE GENERATOR TO:	TUNE RECEIVER TO:	ADJUST FOR MAX. PEAK OUTPUT
1	Aerial Section of Gang	455 kHz	Gang fully closed	Cores in TR5, TR4 and TR3
Repeat adjustments until maximum output is obtained.				
2	Inductively coupled to Rod Aerial*	600 kHz	600 kHz	L.F. Osc. Core Adj. (T2)†
3	Inductively coupled to Rod Aerial*	1,650 kHz	Gang fully opened	Osc. Trimmer (C4)
4	Inductively coupled to Rod Aerial*	1,500 kHz	1,500 kHz	Aer. Trimmer (C2)

† Rock the tuning control back and forth through the signal.
* A coil comprising 3 turns of 16 gauge D.C.C. wire about 12 inches in diameter should be connected between the output terminals of the test instrument, placed concentric with the rod aerial and distant not less than 1 foot from it.

AWA SOLID STATE 13 WATT CONSOLE STEREOGRAM UNIT
MODELS B83 AND B83Z

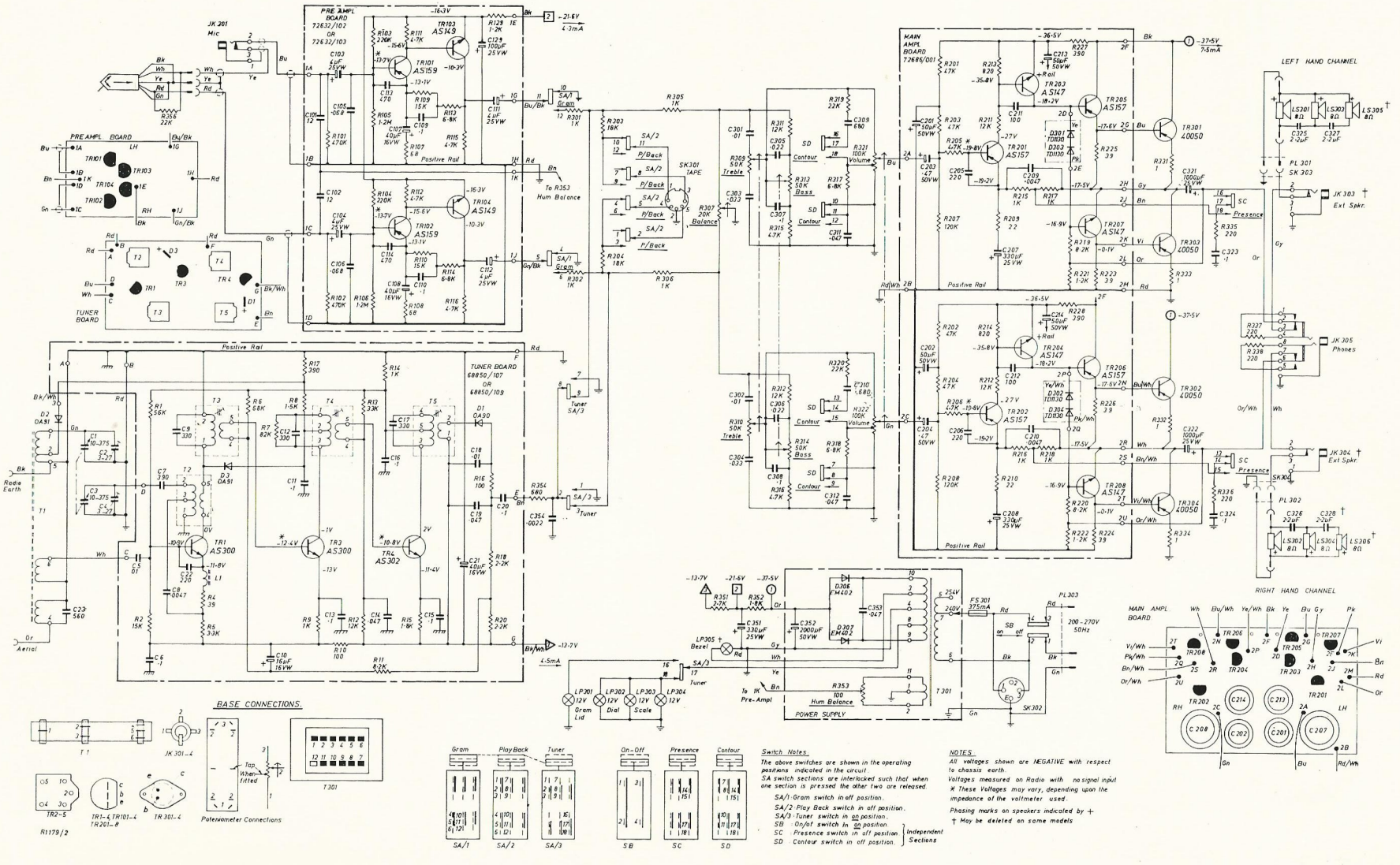

PRINTED BOARD LAYOUTS

TUNER BOARD

Voltage Chart		
Point	P/B68850/106	P/B68850/107
1	−12·4V	−10·9V
2	−13·3V	−11·8V
3	0V	0V
4	−14·2V	−12·4V
5	−14·8V	−13V
6	−1·4V	−1V
7	−11·9V	−10·8V
8	−12·5V	−11·4V
9	−2·5V	−2V
10	−15·6V	−13·7V

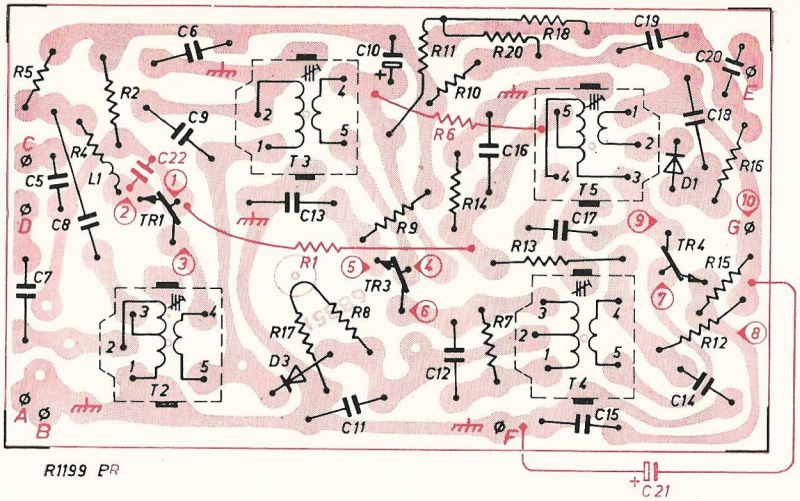

Notes: The board diagram represents the view from the copper track side.

Stiple indicates the copper track.

Black indicates items mounted on component side of the board.

Red indicates components and leads mounted on the copper track side.

Voltages measured under the same conditions that apply on the circuit diagrams.

PRE-AMPLIFIER BOARD

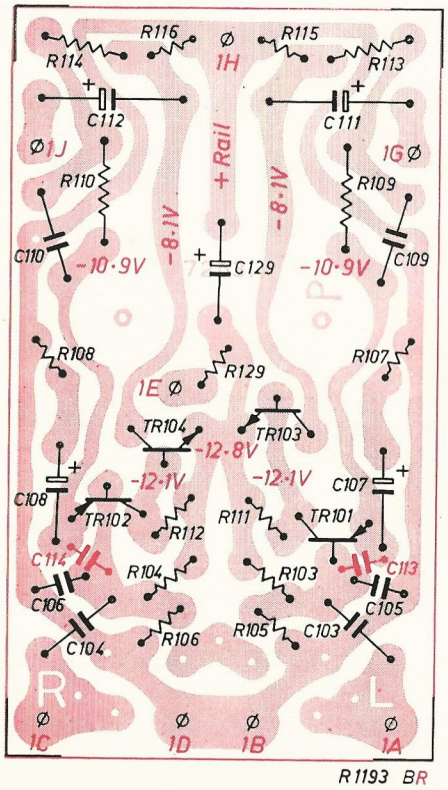

MAIN AMPLIFIER BOARD

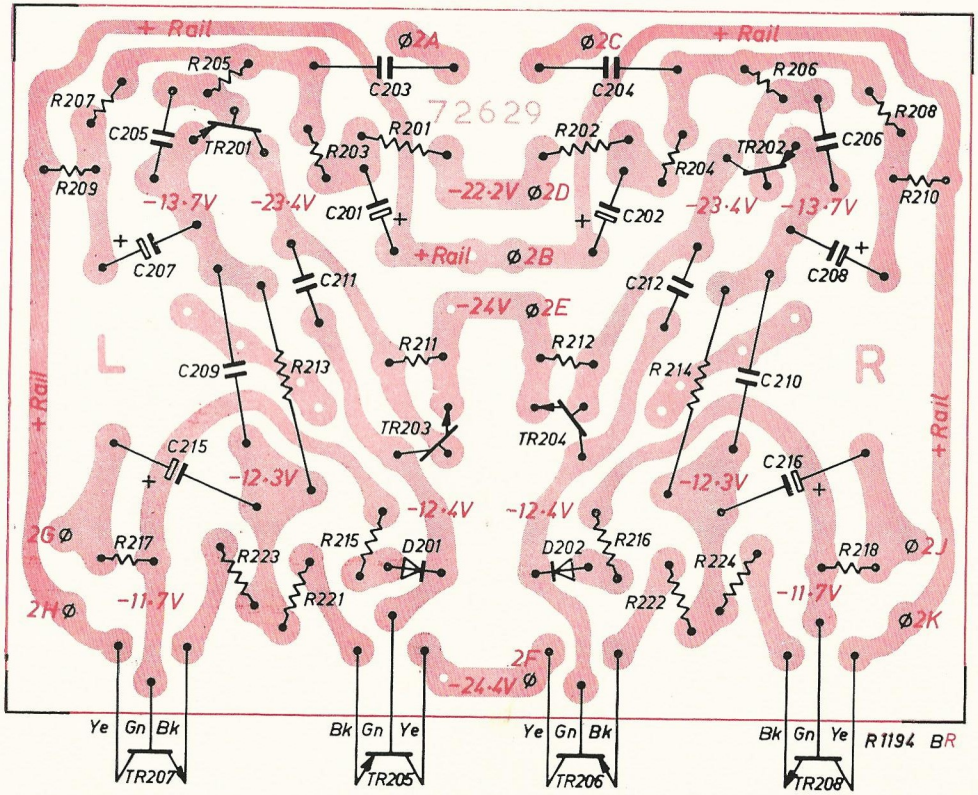

CODE NO.	DESCRIPTION			PART NO.
	TUNER PRINTED BOARD			
R1	56K ohms	± 5%	¼ watt	
R2	15K ohms	±10%	½ watt	
R3	Not used			
R4	39 ohms	±10%	½ watt	
R5	3.3K ohms	±10%	½ watt	
R6	68K ohms	± 5%	¼ watt	
R7	82K ohms	±10%	½ watt	
R8	1.5K ohms	±10%	½ watt	
R9	1K ohms	±10%	½ watt	
R10	100 ohms	±10%	½ watt	
R11	8.2K ohms	±10%	½ watt	
R12	12K ohms	±10%	½ watt	
R13	33K ohms	±10%	½ watt	
R14	1K ohms	±10%	½ watt	
R15	1.8K ohms	±10%	½ watt	
R16	100 ohms	±10%	½ watt	
R17	390 ohms	±10%	½ watt	
R18	2.2K ohms	±10%	½ watt	
R19	Not used			
R20	2.2K ohms	±10%	½ watt	
C1	10-375pF Tuning Aerial			60090
C2	3-27pF Trimmer Aerial			231136
C3	10-375pF Tuning Oscillator (ganged to C1)			
C4	3-27pF Trimmer Oscillator			231136
C5	0.01μF ±10% 100VW polyester			
C6	0.1μF +80% —20% Hi-K disc			
C7	390pF ±2½% 100VW polystyrene			
C8	0.0047μF ±10% 100VW polyester			
C9	330pF +10% —7½% N750 disc			
C10	16μF 10VW Electro			228878
C11	0.1μF +80% —20% Hi-K disc			
C12	330pF +10% —7½% N750 disc			
C13	0.1μF +80% —20% Hi-K disc			
C14	0.047μF ±10% 100VW polyester			
C15	0.1μF +80% —20% Hi-K disc			
C16	0.1μF +80% —20% Hi-K disc			
C17	330pF +10% —7½% N750 disc			
C18	0.01μF ±10% 100VW polyester			
C19	0.047μF ±10% 100VW polyester			
C20	0.1μF ±10% 100VW polyester			
C21	40μF 16VW Electro			229552
C22	220pF ±20% K1-3000 disc			
T1	Ferrite Rod Aerial Assembly			69153
T2	Oscillator Coil Assembly			54157
T3	1st I.F. Transformer			54161
T4	2nd I.F. Transformer			54163
T5	3rd I.F. Transformer			54165
L1	Ferrite Beads (3)			132011

CODE NO.	DESCRIPTION			PART NO.
	PRE-AMPLIFIER PRINTED BOARD			
R101-2	470K ohms	±5%	½ watt	
R103-4	220K ohms	±5%	½ watt	
R105-6	1.2 Megohms	±5%	½ watt	
R107-8	68 ohms	±5%	½ watt	
R109-10	15K ohms	±5%	½ watt	
R111-12	4.7K ohms	±5%	½ watt	
R113-14	6.8K ohms	±5%	½ watt	
R115-16	4.7K ohms	±5%	½ watt	
R117-28	Not used			
R129	1.2K ohms	±5%	½ watt	
C101-2	12pF ±2½% NPO disc			
C103-4	4μF 25VW Electro			228195
C105-6	0.068μF ±10% 100VW polyester			
C107-8	40μF 16VW Electro			229552
C109-10	0.1μF ±10% 100VW polyester			
C111-12	4μF 25VW Electro			228195
C113-14	470pF ±10% Hi-K disc			
C115-128	Not used			
C129	100μF 25VW Electro			229695
TR101-2	AS159 or BC159			
TR103-4	AS149			
	Printed Board Ass'y C/W Components			72632/102
	Printed Board, Blank			72631
	MAIN AMPLIFIER PRINTED BOARD			
R201-2	47K ohms	±5%	½ watt	
R203-4	47K ohms	±5%	½ watt	
R205-6	4.7K ohms	±5%	½ watt	
R207-8	120K ohms	±5%	½ watt	
R209-10	22 ohms	±5%	½ watt	
R211-12	12K ohms	±5%	½ watt	
R113-14	820 ohms	±5%	½ watt	
R115-16	1K ohms	±5%	½ watt	
R117-18	1K ohms	±5%	½ watt	
R119-20	8.2K ohms	±5%	½ watt	
R221-22	1.2K ohms	±5%	½ watt	
R223-24	39 ohms	±5%	½ watt	
R225-26	39 ohms	±5%	½ watt	
R227-28	390 ohms	±5%	½ watt	
C201-2	50μF 50VW Electro			229603
C203-4	0.47μF 50VW Electro			227477
C205-6	220pF ±10% K1-3000 disc			
C207-8	330μF 25VW Electro			229792
C209-10	0.0047μF ±10% 100VW polyester			
C211-12	100pF ±5% N330 disc			
C213-14	50μF 50VW Electro			229603
TR201-2	AS157 or BC157			
TR203-4	AS147			
TR205-6	AS157 or BC157			
TR207-8	AS147			
	Printed Board Ass'y C/W Components			72686/001
	Printed Board, Blank			72685

CODE NO.	DESCRIPTION			PART NO.
R323-30	Not used			
R331-32	1 ohm	±10%	½ watt W.W.	
A333-34	1 ohm	±10%	½ watt W.W.	
R335-36	220 ohms	±10%	½ watt	
R337-38	220 ohms	± 5%	½ watt	
R339-50	Not used			
R351	2.7K ohms	± 5%	½ watt	
R352	1.8K ohms	± 5%	½ watt	
R353	100 ohms Curve A, Carbon, Hum. Balance			620361
R354	680 ohms	±10%	½ watt	
R355	Not used			
R356	22K ohms	±10%	½ watt	
C301-2	0.01μF ±10% 100VW polyester			
C303-4	0.033μF ±10% 100VW polyester			
C305-6	0.022μF ±10% 100VW polyester			
C307-8	0.1μF ±10% 100VW polyester			
C309-10	680pF ±5% 125VW polystyrene			
C311-12	0.047μF ±10% 100VW polyester			
C313-20	Not used			
C321-22	1000μF 25VW Electro			229909
C323-24	0.1μF ±10% 100VW polyester			
C325-26	2.2μF ±10% 50VW metallised polyester			
C327-28	2.2μF ±10% 50VW metallised polyester			
C329-50	Not used			
C351	330μF 25VW Electro			229792
C352	2000μF 50VW Electro			229929
C353	0.047μF ±10% 100VW polyester			
C354	0.0022μF ±10% 100VW polyester			
TR301-2	40050			
TR303-4	40050			
D301-2	TD1130 or AS9M or OA663			
D303-4	TD1130 or AS9M or OA663			
D305	Not used			
D306	EM402 or IN3193 or BY126/200			
D307	EM402 or IN3193 or BY126/200			
T301	Power Transformer			55749/001
SA	Function Switch Ass'y Type 700			72000/058
SB	Power }			
SC	Presence } Switch Ass'y Type 700			72000/059
SD	Contour }			
SK301	Socket, 5 Pin Din			793206
SK302	Socket, Record Changer Power			67237
SK303	Socket, Interconnecting			*
SK304	Socket, Interconnecting			*
PL301	Plug, Interconnecting			†
PL302	Plug, Interconnecting			†
PL303	Plug, 3 Pin Power			
JK301	Microphone Jack			417405
JK302	Not used			
JK303	Ext. Speaker Jack			417405
JK304	Ext. Speaker Jack			417405
JK305	Headphones Jack			417032

TR1	AS300	
TR2	Not used	
TR3	AS300	
TR4	AS302	
D1	OA90	
D2	OA91	
D3	OA91	
	Printed Board Ass'y C/W Components	68850/107
	Printed Board, Blank	68851

	CHASSIS WIRING			
R301-2	1K ohms	±10%	½ watt	
R303-4	18K ohms	±10%	½ watt	
R305-6	1K ohms	±10%	½ watt	
R307	20K ohms Curve W, Balance			620232
R308	Not used			
R309-10	50K ohms Curve B, Treble			620859
R311-12	12K ohms	±10%	½ watt	
R313-14	50K ohms Curve B, Bass			620859
R315-16	4.7K ohms	±10%	½ watt	
R317-18	6.8K ohms	±10%	½ watt	
R319-20	22K ohms	±10%	½ watt	
R321-22	100K ohms Curve B, Volume			620875

LP301	12 volt 2.2W Gram Lid Lamp	428147
LP302	12 volt 2.2W Dial Lamp	428147
LP303	12 volt 2.2W Dial Lamp	428147
LP304	12 volt 2.2W Dial Lamp	428147
LP305	12 volt 2.2W Power Indicator	428147
LS301-2	8" Speaker Type 8TBC/8	54818
LS303-4	5" Speaker Type 525LC/B	56282/001
LS305-6	2" Speaker Type 2MBC/8HF	56200/006
	†Comprises Housing Moulded	401701
	Connector	596502
	*Comprises Housing Moulded	401700
	Connector	570043

MECHANICAL REPLACEMENT PARTS

Item	Part/Code No.
CABINET FITTING	
Badge, "AWA"	72648/002
Buffer, Rubber #37379	646205
Cabinet	68555/*
Diffuser (Lid Light)	72691
Escutcheon Metal Cal, Assembly	72690
Comprising:	
Escutcheon, Screen printed	65093
Insert	72681
Emblem, "Hallmark"	72649/002
Fret Assembly	74214
Comprising:	
Cloth, Fret, Colan	212165
Stud, Fret Mounting	74680
Fret, Sprayed	72687/*
Ferrule (Leg Trim)	72684/002
Hinge, Butt 2½"	398048
Indicator Rod	67291
Knob Tuning, Assembly	72641
Knob, Slider Controls (4)	72644/002
Knob, Push Button (6)	72645/001
Lid Stay, EFFCO	856515
Record Changer MA70 (B83) #69967	201254
Including:	
Cartridge	C1 or SC5M
Stylus Replacement	ST4/D88 (C1)
	ST14/D442 (SC5M)
Record Changer C117-A-1 (B83Z) #74643	201245
Including:	
Cartridge	SC5M
Stylus Replacement	ST14/D442
Trim Horizontal, Finished	72680/001

* Colours to be specified.

Item	Part/Code No.
CHASSIS FITTING	
Bracket Assembly, Spring, L.H. (Escutcheon retaining)	72697
Bracket Assembly, Spring R.H. (Escutcheon retaining)	72699
Clamp Body, Power Cable	208056
Clamp Lock, Power Cable	208057
Cord, Dial Drive	39421/9
Diffuser, Light, Dial Scale	72626
Drum Assembly, Dial Drive	72616
Gang Mounting:	
Grommet 36826/002 (3)	389262
Screw 4BA x 5/16" Ch Hd Steel (3)	714110
Spacer (3)	35923
Washer 4BA ITL	921204
Washer 4BA Plain	13156
Insulator, R/C Power Plug, 31847	646173
Insulator, R/C Power Socket, 67238	646445
Pointer, Moulded	72625/001
Plug, 4 Pin. Record Charger Power	29696
Pulley, Dial Cord	17716
Spindle Assembly, Tuning	72618
Spring, Tension, Drive Cord, #44189	798159

Note: When ordering spares, always quote the above Part Numbers, and in the case of coloured parts, such as knobs, etc., also quote the colour.