Issued by Amalgamated Wireless (Australasia) Limited

AWA TRANSISTOR CLOCK RADIO

Model B78

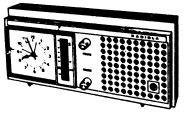

GENERAL DESCRIPTION

The model B78 is a five transistor a.c. operated clock radio designed for the reception of the Medium Wave broadcasting band. The clock is a "Westclox" self starting, synchronous movement with simple controls.

ELECTRICAL AND MECHANICAL SPECIFICATIONS

Frequency Range	520-1650 kHz
Intermediate Frequency	455 kHz
Power Supply Rating	220-280 volts a.c. at 50 Hz

Power Consumption:

Clock	3 watts
Radio	3 watts

Loudspeaker:

4"	50258
V/C Impedance	120 ohms at 400 Hz
Power Output	100 mW

Dimensions:

Height	5-9/32" (13.4 cms)
Width	11-31/32" (30.3 cms)
Depth	3-5/32" (8.0 cms)

Shipping Weight	6 lb. (2.7 kgms)

Transistor and Diode Complement:

2N1639	Converter
2N1638	1st I.F. Amplifier
2N1638	2nd I.F. Amplifier
2N408	Driver
AS128	Audio Output
1N87A/OA90	Overload Diode
1N87A/OA90	Detector Diode
AS25	Rectifier

Connection to Power Supply:

The receiver should not be connected to any supply source other than AC in the range 220-280 volts and a frequency of 50 Hz.

For correct transformer tappings refer to the circuit diagram.

CLOCK RADIO OPERATION

Radio Manual:
Turn function switch to "ON" position then operate radio.

Radio Off:
Turn function switch on clock front to the "OFF" position.

To Set Time:
Pull rear knurled knob outwards and rotate to set the time hands.

Auto Setting:
Push the rear knurled knob inwards and rotate to adjust the AUTO (i.e. alarm) hand.

Auto Switch-On:
Set AUTO hand to the time that switch-on is desired. Turn the radio to the station desired at the time of switch-on and set volume. Turn function switch on the clock front to "AUTO" position.

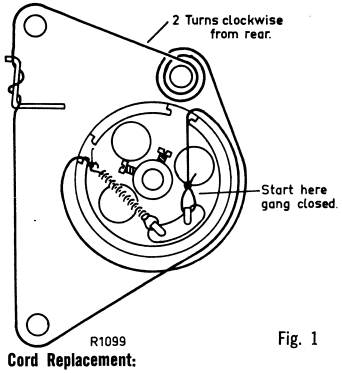

Fig. 1

Dial Cord Replacement:

Figure 1 shows the route of the dial cord and the method of attachment.

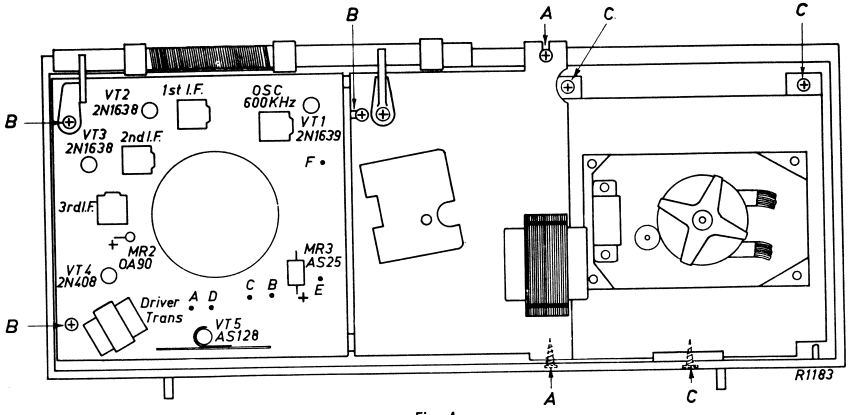

Fig. 4

Chassis Removal:

Remove the front control knobs by pulling them straight off their spindles and remove the felt washers behind the knobs.

Pull the front control knob off the clock spindle.

Remove the large moulded button plug at the back of the cabinet and free the power cord.

Remove the two screws in the base of the cabinet.

Ease the back of the cabinet off the front assembly, taking care to clear the knurled hand-set knob of the clock.

Referring to Figure 4:

—remove the two Philips head screws (at "A") and remove the insulating cover;

—disconnect the speaker leads and add extension leads if necessary;

—remove the three Philips head screws (at "B").

Swing the P/C board and chassis away from the front assembly.

The receiver may now be set in a self supporting position and operated normally while providing access to all components.

Replacement of the chassis is the reverse of the above procedure.

Clock Removal:

Disconnect the power plug from the a.c. mains.

Remove the cabinet back.

Unsolder the mains lead to the clock.

Remove 3 Philips head screws (at "C") and remove the clock assembly from the cabinet front.

Reassembly is the reverse of the above procedure.

ALIGNMENT PROCEDURE

For all alignment operations, keep the generator output as low as possible to avoid a.g.c. action, and set the volume control to the maximum clockwise position.

Testing Instruments:

Signal generator—modulated 400 Hz or modulated oscillator.

If the modulated oscillator is used, connect a 220K ohms non-inductive resistor across the output terminals.

Testing Note:

No output transformer is used in this receiver since the speaker has a 120 ohms voice coil and carries the collector current of the output transistor.

For output measurement, if an indication only is required, Output Meter 2M8832 switched to 5000 ohms and connected in parallel with the speaker should be adequate.

For correct reading of power output, on a.c. meter with neither probes earthed, connected to the output collector will measure the voltage across the 120 ohms load. The normal alignment level of 50mW occurs when 2.5 volts is indicated on the a.c. voltmeter.

ALIGNMENT TABLE

ORDER	CONNECT GENERATOR TO	TUNE GENERATOR TO	TUNE RECEIVER TO	ADJUST FOR MAX. PEAK OUTPUT
1	Aerial section of Gang	455 kHz	Gang fully closed	Cores in TR5, TR4 and TR2
Repeat adjustment until maximum output is obtained.				
2	Inductively coupled to Rod Aerial*	600 kHz	600 kHz	L.F. Oscillator Core adjust (TR3)†
3	Inductively coupled to Rod Aerial*	1650 kHz	Gang fully open	H.F. Oscillator Adj. (C6)
4	Inductively coupled to Rod Aerial*	1500 kHz	1500 kHz	H.F. Aerial Adjust. (C5)
Repeat adjustments 2, 3 and 4.				

* A coil comprising 3 turns of 16 gauge wire about 12" in diameter should be connected between the output terminals of the test instrument, placed concentric with the rod aerial and distant not less than 1 foot from it.

† Rock the tuning control back and forth through the signal.

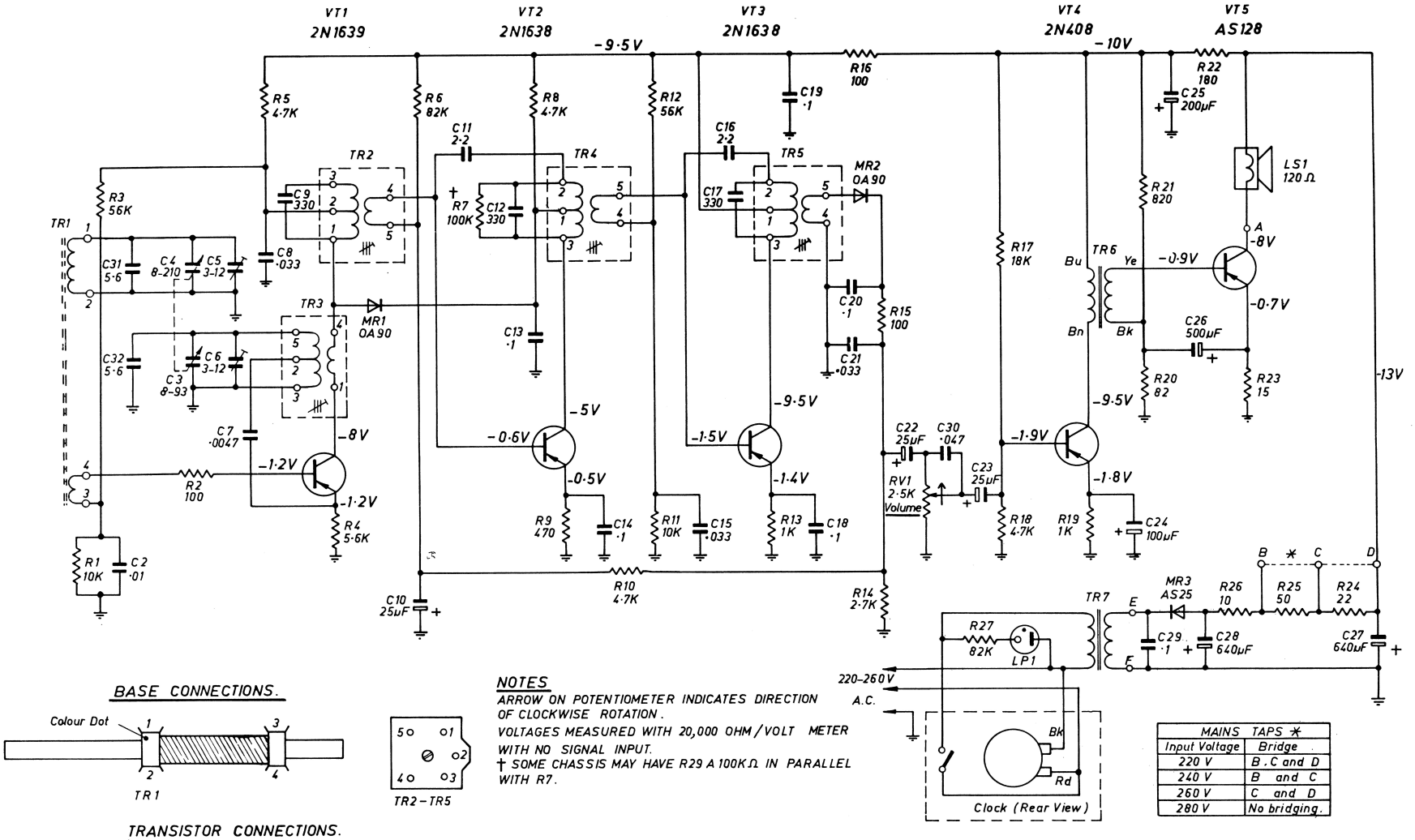

BASE CONNECTIONS.

NOTES

ARROW ON POTENTIOMETER INDICATES DIRECTION OF CLOCKWISE ROTATION.

VOLTAGES MEASURED WITH 20,000 OHM/VOLT METER WITH NO SIGNAL INPUT.

† SOME CHASSIS MAY HAVE R29 A 100KΩ IN PARALLEL WITH R7.

MAINS TAPS *	
Input Voltage	Bridge
220 V	B. C and D
240 V	B and C
260 V	C and D
280 V	No bridging.

TRANSISTOR CONNECTIONS.

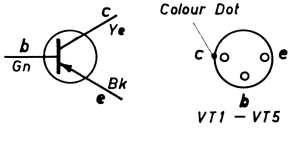

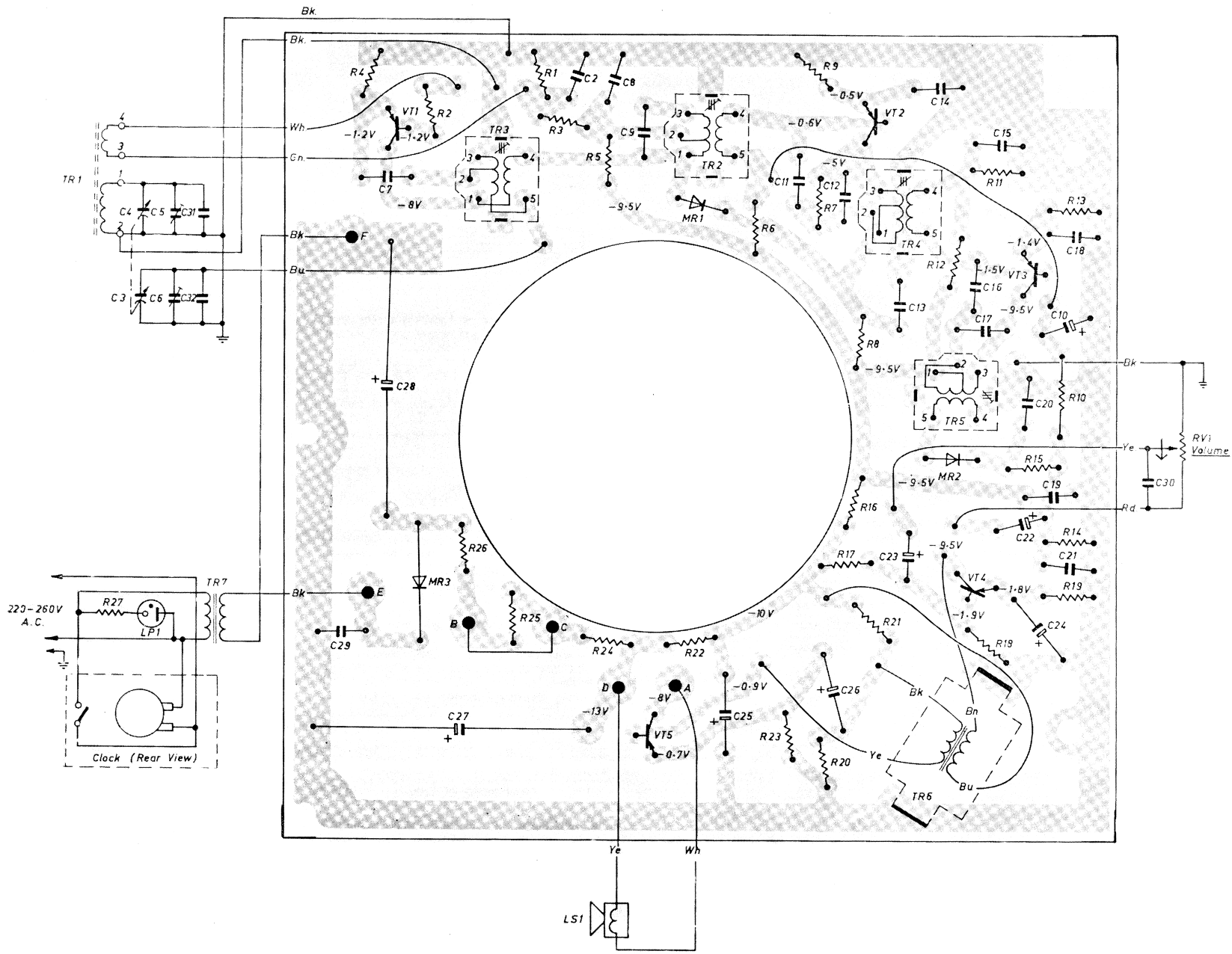
Bk.
Wh
Gn.
Bk
Bu
TR1
C4
C5
C31
C3
C6
C32
R4
R1
C2
C8
R9
-0·5V
C14
VT1
R2
-1·2V
-1·2V
TR3
R3
C9
TR2
-0·6V
VT2
C15
C7
-8V
R5
-9·5V
MR1
C11
-5V
C12
R7
R11
R13
R6
TR4
-1·4V
C18
R12
-1·5V
C16
VT3
C13
-9·5V
C17
C10
R8
-9·5V
C28
TR5
C20
R10
RV1
Volume
Ye
R15
MR2
-9·5V
C19
C30
Rd
R16
C22
R14
R26
R17
C23
-9·5V
C21
MR3
VT4
-1·8V
R19
TR7
220-260V
A.C.
R27
LP1
E
R25
C
B
-10V
-1·9V
R21
C24
C29
R24
R22
R19
D
A
-8V
-0·9V
C26
Bk
C27
-13V
VT5
0·7V
C25
R23
Bn
Ye
R20
TR6
Bu
Clock (Rear View)
LS1
Ye
Wh