TECHNICAL INFORMATION AND SERVICE DATA

MANUFACTURERS AWA SUPERVISED SERVICE

Issued by Amalgamated Wireless (Australasia) Limited

B74.

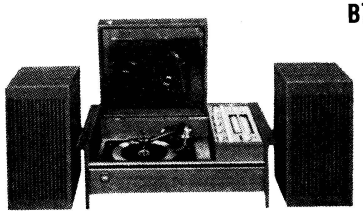

B71

A.W.A.
STEREOPHONIC RADIOLAGRAM
Models B71, B71Z and B74

GENERAL DESCRIPTION

MODEL B71: This is a 3-piece stereo radiogram comprising a console cabinet, fitted with BSR type MA70 record changer, and two large matching speaker units.

MODEL B71Z: Similar to above but containing a Garrard type SL55 record changer.

MODEL B74: A 3-piece stereo radiogram featuring a shelf cabinet and two compact speaker units. An occasional table is available as an optional sales accessory for this model.

Models B71, B71Z and B74 are 15 transistor, 3-piece AC operated stereophonic radiograms designed for the reception of the Medium Wave Broadcasting Band and for the reproduction of both monophonic and stereophonic recordings. The chassis consists of 3 transistor printed board tuner and a 12 transistor hand wired stereo amplifier. Provision has been made for attaching a microphone, or tape recorder.

ELECTRICAL AND MECHANICAL SPECIFICATIONS

DIMENSIONS	B71, B71Z		B74	
	CONSOLE	SPEAKER UNITS	CONSOLE	SPEAKER UNITS
Height	25″ (63.5 cms.)	22½″ (57.1 cms.)	8-9/16″ (21.7 cms.)	8-9/16″ (21.7 cms.)
Depth	16¾″ (42.5 cms.)	16¾″ (42.5 cms.)	15-7/8″ (40.3 cms.)	10″ (25.4 cms.)
Width	25¼″ (64 cms.)	12-5/16″ (31.3 cms.)	25-15/16″ (65.8 cms.)	16¼″ (41.3 cms.)
Weight (Packed)	153 lbs. (69.3 kgms.)		73 lbs. (33 kgms.)	

Frequency Range ..... 520-1650 kHz

Intermediate Frequency ..... 455 kHz

Power Supply Rating ..... 220-260V A.C. 50 Hz

Power Consumption:

Receiver ..... 20 watts

Record Changer ..... 20 watts

Undistorted Power Output ..... 6 watts per channel

Load Impedance ..... 8 ohms at 400 Hz

Transistor and Diode Complement:

AS300	Converter	
AS300	1st I.F. Amplifier	
AS302	2nd I.F. Amplifier	
AS149	1st Audio Amplifier	per channel
AS149	2nd Audio Amplifier	per channel
BC179	3rd Audio Amplifier	per channel
AS208	Driver	per channel
AD162	Complementary	per channel
AD161	Symmetry Output	per channel
OA91	Signal Clamp Diode	
OA91	Overload Diode	
IN87A/OA90	Detector	
IN3193	Rectifiers	
IN3193	Rectifiers	

CP2.5M670

TUNER PRINTED BOARD ASSEMBLY 68850/103

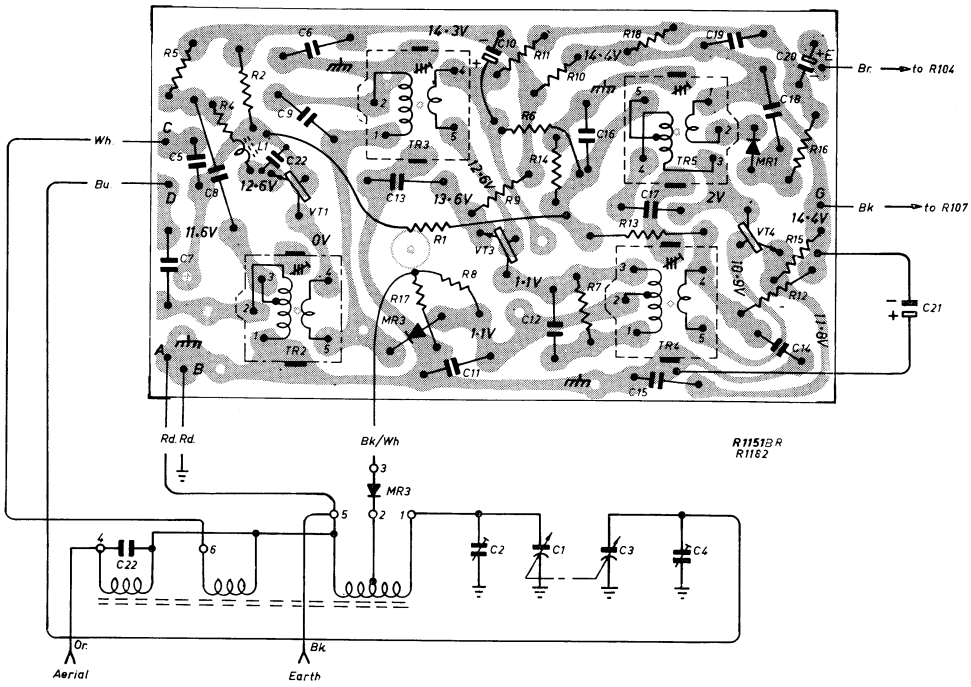

Notes: The diagram represents the view from the wiring side of the printed board.
Stipple area indicates printed wiring.
Red indicates components and leads mounted on the remote side of the board.
Black indicates those components and leads mounted on the wiring side or completely removed from the board.
All voltages shown are negative with respect to the chassis earth and measured with no signal input using a 20,000 ohm/volt meter.

ALIGNMENT PROCEDURE

Testing Instruments:

I.F. Alignment Tool No. 39463.

Signal Generator—Modulated 400 Hz or Modulated Oscillator.

If the modulated oscillator is used, connect a 220K ohms non-inductive resistor across the output terminals.

Output Meter—8 ohms impedance.

N.B. In order to avoid damage to output transistors and associated circuitry, make sure that the total load impedance connected to either channel is never less than 8 ohms.

Set the balance control to that position which gives maximum audio output on the output meter.

For all alignment operations keep the generator output as low as possible to avoid a.g.c. action and set the volume control in the maximum clockwise position.

Chassis Layout:

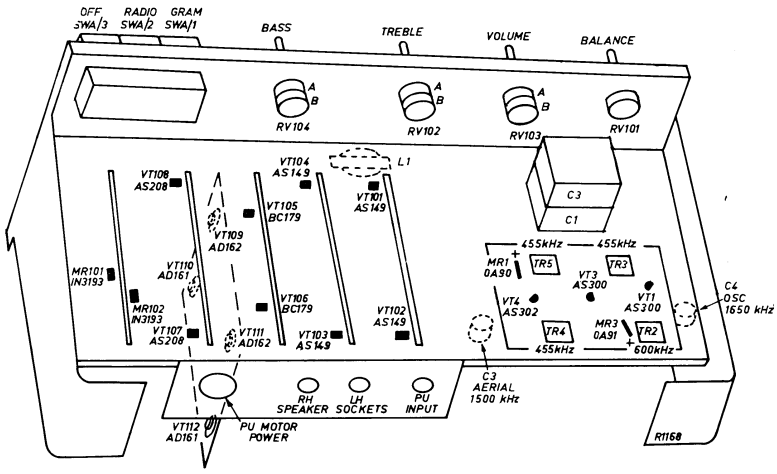

ALIGNMENT TABLE

ORDER	CONNECT GENERATOR TO:	TUNE GENERATOR TO:	TUNE RECEIVER TO:	ADJUST FOR MAX. PEAK OUTPUT
1	Aerial Section of Gang	455 kHz	Gang fully closed	Cores in TR5, TR4 and TR3
Repeat adjustments until maximum output is obtained.				
2	Inductively coupled to Rod Aerial*	600 kHz	600 kHz	L.F. Osc. Core Adj. (TR2)†
3	Inductively coupled to Rod Aerial*	1,650 kHz	Gang fully opened	Osc. Trimmer (C4)
4	Inductively coupled to Rod Aerial*	1,500 kHz	1,500 kHz	Aer. Trimmer (C2)
Repeat if necessary until maximum output is obtained.				

† Rock the tuning control back and forth through the signal.
* A coil comprising 3 turns of 16 gauge D.C.C. wire about 12 inches in diameter should be connected between the output terminals of the test instrument, placed concentric with the rod aerial and distant not less than 1 foot from it.

CHASSIS REMOVAL—MODEL B71 and B71Z.

Remove the cabinet back.

Remove the two screws clamping the chassis end plates to the shelf. Unplug the speaker, pick-up and phono-motor power cables from the chassis. Remove the bezel lamp holder from its bracket and disconnect the plug-in leads to the lamp holder in the record changer compartment. Free all these leads for easy removal.

Lift the chassis out through the top of the cabinet taking care not to scratch the cabinet.

CHASSIS REMOVAL—MODEL B74.

Remove the two holding screws on the bottom of the cabinet. Cover the right hand edge and the front of the cabinet with pieces of cardboard or other suitable material to prevent scratching.

Lift the chassis up and rest it on the cardboard. Unplug the speaker, pick-up and phono-motor power leads and lift the chassis clear.

CHASSIS REPLACEMENT.

This is the reverse of the procedures above.

Note: The pick-up and mains leads should be separated as much as possible to avoid inter-circuit reaction.

DIAL SCALE REPLACEMENT.

Remove the chassis.

Remove the five control knobs.

Remove the three screws along each side that secure the escutcheon to the chassis.

Ease the escutcheon and dial scale assembly clear of the control spindles and push buttons. Slide the escutcheon sideways about ¾″ to free the lower edge, then lift clear.

To replace a scale:

—Remove the old scale and all adhesive tapes.

—Replace all tapes using ¼″ wide double sided pressure sensitive tape.

—Align the scale centrally in the openings and press firmly into place on the tapes.

—Ensure that the estafoam strip is in place across the end of the scale (end opposite to the tuning spindle).

—Replace the escutcheon, knobs etc.

Note: In some models a bifurcated rivet is used to secure the scale at each end in addition to the tapes.

DIAL LAMP REPLACEMENT.

To replace a dial lamp, remove the escutcheon and dial backing plate.

Replace the lamp and **make sure that the leads are taped back to avoid tangling during pointer travel.**

Re-assemble dial parts in reverse order.

RECORD CHANGER REMOVAL.

Remove the cabinet back or base (B74) and disconnect the appropriate phono-motor and pick-up input plugs.

Situated underneath the motor board are two screws fitted with spring clips. Swing the clips over until they are parallel with the length of the screw.

Lift the record changer from the cabinet.

DRIVE CORD REPLACEMENT.

Remove the chassis from the receiver. Remove the escutcheon.

The accompanying diagram shows the route of the cord and the method of attachment. Minimum length of cord required is 52 inches.

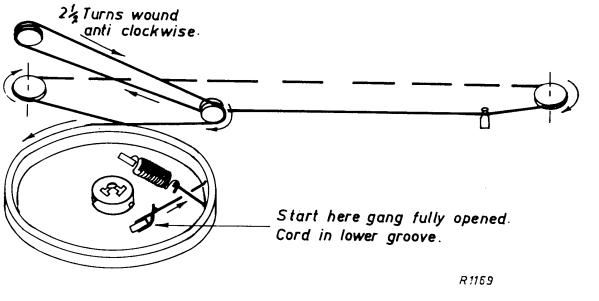

ADJUSTMENT OF OUTPUT IDLING CURRENT.

This adjustment is made during manufacture and need only be checked if any of the following conditions arise:

1. Any transistor or resistor is replaced in the audio amplifier stages.
2. Cross-over distortion is present.

The adjustment is as follows:

With the amplifiers correctly loaded (8 ohms per channel) disconnect the collector leads to VT109 and VT111 and insert an ammeter between each lead and its corresponding collector. With the volume control set in its minimum (anti-clockwise) position, adjust RV105 and RV106 to give a reading of 12-15 mA on the meter for each channel.

N.B. The total overall idling current for the radiogram is 95 mA.

SPECIAL NOTE:

VT107 and VT108 driver stages use AS208 transistors. The AS208 is an n-p-n silicon planar epitaxial transistor in which the collector is connected to the shell for heat dissipation. In its mode of operation in this circuit the shell temperature may rise 90°C. above ambient which is well within its rating. This temperature rise can obviously cause burns to the skin and due caution should be exercised during servicing.

CODE No.	DESCRIPTION			PART No.
	RESISTORS			
	All resistors composition type unless otherwise stated.			
R1	56K ohms	± 5%	¼ watt	
R2	15K ohms	±10%	½ watt	
R3	Not Used.			
R4	39 ohms	±10%	½ watt	
R5	3.3K ohms	±10%	½ watt	
R6	68K ohms	± 5%	¼ watt	
R7	82K ohms	±10%	½ watt	
R8	1.5K ohms	±10%	½ watt	
R9	1K ohms	±10%	½ watt	
R10	100 ohms	±10%	½ watt	
R11	10K ohms	±10%	½ watt	
R12	12K ohms	±10%	½ watt	
R13	33K ohms	±10%	½ watt	
R14	1K ohms	±10%	½ watt	
R15	1.8K ohms	±10%	½ watt	
R16	100 ohms	±10%	½ watt	
R17	220 ohms	±10%	½ watt	
R18	2.2K ohms	±10%	½ watt	
R101	2.2 Megohms	± 5%	½ watt	
R102	2.2 Megohms	± 5%	½ watt	
R103	220K ohms	± 5%	½ watt	
R104	33K ohms	± 5%	½ watt	
R105	Not Used.			
R106	22K ohms	± 5%	½ watt	
R107	1.8K ohms	± 5%	½ watt	
R108	18K ohms	± 5%	½ watt	
R109	150K ohms	± 5%	½ watt	
R110	Not Used.			
R111	3.3K ohms	± 5%	½ watt	
R112	220K ohms	± 5%	½ watt	
R113	3.3K ohms	± 5%	½ watt	
R114	18K ohms	± 5%	½ watt	
R115	Not Used.			
R116	100K ohms	± 5%	½ watt	
R117	56K ohms	± 5%	½ watt	
R118	100K ohms	± 5%	½ watt	
R119	56K ohms	± 5%	½ watt	
R120	100 ohms	± 5%	½ watt	
R121	680 ohms	± 5%	½ watt	
R122	470 ohms	± 5%	½ watt	
R123	2.2K ohms	± 5%	½ watt	
R124	470 ohms	± 5%	½ watt	
R125	100 ohms	± 5%	½ watt	
R126	680 ohms	± 5%	½ watt	
R127	2.2K ohms	± 5%	½ watt	
R128	6.8K ohms	± 5%	½ watt	
R129	3.3K ohms	± 5%	½ watt	
R130	Not Used.			
R131	6.8K ohms	± 5%	½ watt	
R132	3.3K ohms	± 5%	½ watt	
R133	1.8K ohms	± 5%	½ watt	
R134	4.7K ohms	± 5%	½ watt	
R135	Not Used.			
R136	1.8K ohms	± 5%	½ watt	
R137	4.7K ohms	± 5%	½ watt	
R138	220 ohms	± 5%	½ watt	
R139	2.7K ohms	± 5%	½ watt	
R140	Not Used.			
R141	4.7K ohms	± 5%	½ watt	
R142	12K ohms	± 5%	½ watt	
R143	10 ohms	± 5%	½ watt W.W.	
R144	2.7K ohms	± 5%	½ watt	
R145	Not Used.			
R146	4.7K ohms	± 5%	½ watt	
R147	12K ohms	± 5%	½ watt	
R148	10 ohms	±10%	½ watt W.W.	
R149	1.5K ohms	± 5%	½ watt	
R150	Not Used.			
R151	1.5K ohms	± 5%	½ watt	
R152	1K ohms	± 5%	½ watt	
R153	6.8 ohms	± 5%	½ watt W.W.	
R154	390 ohms	±10%	1 watt	
R155	1K ohms	± 5%	½ watt	
R156	6.8 ohms	± 5%	½ watt W.W.	
R157	1K ohms	± 5%	½ watt	
R158	390 ohms	±10%	1 watt	
R159	1 ohms	±10%	½ watt	
R160	1K ohms	± 5%	½ watt	
R161	1 ohm	±10%	½ watt W.W.	
R162	1 ohm	±10%	½ watt W.W.	
R163	1 ohm	±10%	½ watt W.W.	
RV101	2.5K Curve A, Carbon Balance			621231
RV102A	20K ohms Curve A, Carbon	Treble		620235
RV102B	20K ohms Curve A, Carbon	Treble		620235
RV103A	25K ohms Curve S33 Carbon	Volume		622700
RV103B	25K ohms Curve S33 Carbon	Volume		622700
RV104A	20K ohms Curve A, Carbon	Bass		620234
RV104B	20K ohms Curve A, Carbon	Bass		620234
RV105	100 ohms linear W.W.			620000
RV106	100 ohms linear W.W.			620000
	CAPACITORS			
C1	10-375pF Tuning Aerial			60090
C2	3-27pF Trimmer Aerial			231136
C3	10-375pF Tuning Oscillator (ganged to C1)			60090
C4	3-27pF Trimmer Oscillator			231136
C5	0.01μF ±10% 100VW polyester			
C6	0.1μF +80% —20% Hi-K disc			
C7	390pF ±2½% 100VW polystyrene			
C8	0.0047μF ±10% 100VW polyester			
C9	330pF +10% —7½% N750 disc			
C10	16μF 10VW Electrolytic			228878
C11	0.1μF +80% —20% Hi-K disc			
C12	330pF +10% —7½% N750 disc			
C13	0.1μF +80% —20% Hi-K disc			
C14	0.047μF ±10% 100VW polyester			
C15	0.1μF +80% —20% Hi-K disc			
C16	0.1μF +80% —20% Hi-K disc			
C17	330pF +10% —7½% N750 disc			
C18	0.01μF 10% 100VW polyester			
C19	0.047μF ±10% 100VW polyester			
C20	4μF 10VW Electrolytic			228189
C21	40μF 16VW Electrolytic			229552
C22	220pF ±20% K3000 disc			
C23	560pF ±5% 100VW polystyrene			
C101	0.22μF ±10% 100VW polyester			
C102	0.047μF ±10% 100VW polyester			
C103	0.0047μF ±10% 400VW polyester			
C104	0.012μF ±10% 400VW polyester			
C105	Not Used.			
C106	0.0047μF ±10% 400VW polyester			
C107	0.012μF ±10% 400VW polyester			
C108	10μF 16VW Electrolytic			228756
C109	10μF 16VW Electrolytic			228756
C110	Not Used.			
C111	10μF 16VW Electrolytic			228756
C112	80μF 2.5VW Electrolytic			229672
C113	125μF 16VW Electrolytic			229734
C114	125μF 16VW Electrolytic			229734
C115	Not Used.			
C116	80μF 2.5VW Electrolytic			229672
C117	10μF 16VW Electrolytic			228756
C118	0.01μF ±10% 100VW polyester			
C119	10μF 16VW Electrolytic			228756
C120	Not Used.			
C121	0.1μF ±10% 100VW polyester			
C122	0.0039μF ±10% 400VW polyester			
C123	0.1μF ±10% 100VW polyester			
C124	0.022μF ±10% 400 VW polyester			
C125	Not Used.			
C126	0.1μF ±10% 100VW polyester			
C127	0.0039μF ±10% 400 VW polyester			
C128	0.1μF ±10% 100VW polyester			
C129	0.022μF ±10% 400VW polyester			
C130	Not Used.			
C131	0.047μF ±10% 160VW polyester			
C132	0.22μF ±10% 100VW polyester			
C133	0.047μF ±10% 160VW polyester			
C134	0.22μF ±10% 100VW polyester			
C135	Not Used.			
C136	10μF 16VW Electrolytic			228756
C137	160μF 25VW Electrolytic			229842
C138	10μF 16VW Electrolytic			228756
C139	160μF 25VW Electrolytic			229842
C140	Not Used.			
C141	500μF 25VW Electrolytic			229868
C142	0.001μF +100% —20% K5000 disc			
C143	640μF 16VW Electrolytic			229880
C144	0.001μF +100% —20% K5000 disc			
C145	1μF 40VW Electrolytic			227748
C146	640μF 16VW Electrolytic			229880
C147	0.0047μF ±10% 400VW polyester			
C148	0.0047μF ±10% 400VW polyester			
C149	640μF 16VW Electrolytic			229880
C150	1μF 40VW Electrolytic			227748
C151	640μF 16VW Electrolytic			229880
C152	0.047μF ±10% 100VW polyester			
C153	1000μF 40VW Electrolytic			229918
C154	1000μF 25VW Electrolytic			229909
C155-C160	Not Used.			
C161	10μF 25VW Electrolytic, non-polarised			228789
C162	10μF 25VW Electrolytic, non-polarised			228789
	TRANSFORMERS AND INDUCTORS			
TR1	Ferrite Rod Aerial Assembly			69153
TR2	Oscillator Transformer			54157
TR3	1st I.F. Transformer			54161
TR4	2nd I.F. Transformer			54163
TR5	3rd I.F. Transformer			54165
TR101	Transformer Assembly Power			54432
L101	Not Used.			
L102	H.T. Choke			54434/001

TRANSISTORS AND SEMICONDUCTORS

MR1	IN87A	MR101	IN3193	VT106	BC179
MR2	OA91	MR102	IN3193	VT107	AS208
MR3	OA91	VT101	AS149	VT108	AS208
VT1	AS300	VT102	AS149	VT109	AD162 *
VT2	Not Used.	VT103	AS149	VT110	AD161 *
VT3	AS300	VT104	AS149	VT111	AD162 *
VT4	AS302	VT105	BC179	VT112	AD161 *

*N.B. Supplied matched pairs including Mica insulators and bushes.

MISCELLANEOUS

LS101	+ 103 Speaker 6" B74	54817
LS107	+ 103 Speaker 8" B71	54818
LS102	+ 104 Speaker 5"	53445
LP101	Lamp Dial 12V 2.2W	428147
LP102	Lamp Dial 12V 2.2W	428147
LP103	Lamp Dial 12V 2.2W	428147
SWA	Switch Assembly Type 700	72000/043
JK101	Mic Jack	417405
JK102	Record R.H. Jack	417405
JK103	Playback R.H. Jack	417405
JK104	Record L.H. Jack	417405
JK105	Playback L.H. Jack	417405
TH101	8 ohms at 25°C NTC	893708
TH102	8 ohms at 25°C NTC	893708
	R.F. Printed Board Assembly, C/W Components	68850/103
	R.F. Printed Board Blank	68851

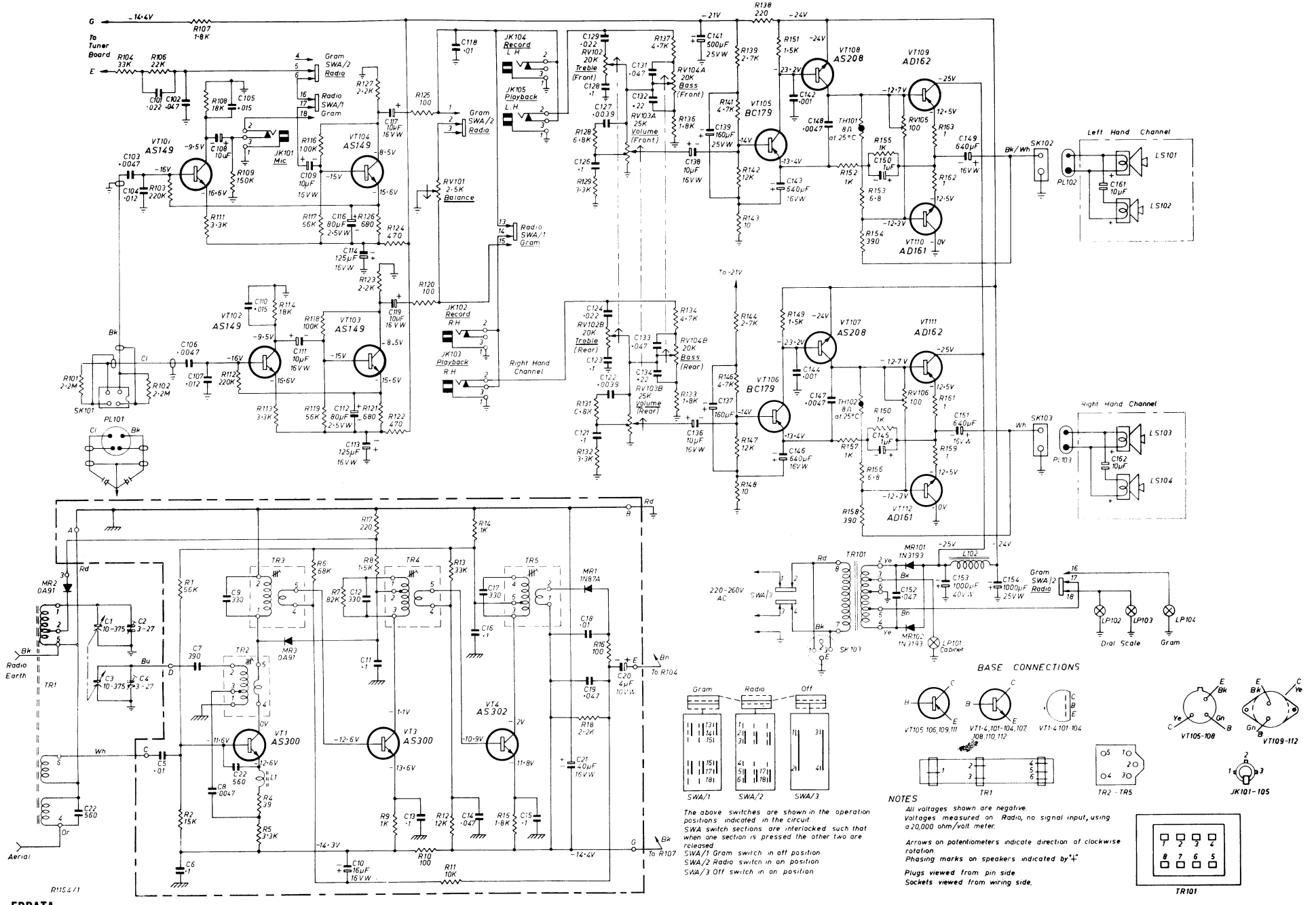

ERRATA:
Value of C22 from base to emitter of VT1 should read 220.
Circuit code of C22 on ferrite rod aerial read C23.

For circuit modifications to suppress audible clicks caused by electrical appliances refer page 7.

MECHANICAL REPLACEMENT PARTS

Item	Part No.
CABINET FITTING	
Cabinet Assembly, Console B71	
Cabinet Assembly, Console B71Z	
Comprising:	
Back, Cabinet	69939
Badge, Lid, A.W.A.	69871
Buffer, Rubber (2)	37379
Cabinet, B71	68535/001
Cabinet, B71Z	68535/004
Catch, Door, Magnetic MC150	197019
Emblem, "Hallmark"	69938
Feet, Dome Slide (4)	385053
Hinge, Weldon Type T61 "Futuba" (2)	398090
Support, Lid 800 LH	856528
Trim, Bottom	69934
Trim, Top	69929
Vinyl, Stretch, Black 24" x 10¼"	212157
Cabinet Assembly, Console B74	
Comprising:	
Badge, A.W.A.	68971/003
Base, Cabinet	69956
Buffer, Rubber, Lid (2) 69968	212197
Cabinet	68536/001
Emblem "Hallmark"	69938/002
Feet, Rubber (4)	69976
Hinge, No. 438, 1½" Florentine Bronze (2)	398029
Lid, Acrylic	69961
Stay, Lid	856527
Trim, Cabinet	69953
Trim, Lid	69965
Cabinet Assembly, Speaker B74 (2)	
Comprising:	
Badge	72389/001
Cabinet	68536/003
Cloth, Lantor, 2" dia.	69962
Cloth, Lantor, 4-7/16" dia.	69968
Cloth, Lantor, 5-19/32" dia.	69969
Tube, Speaker Port 69999	909490
Cabinet Assembly, Speaker LH (B71, B71Z)	
Cabinet Assembly, Speaker RH (B71 B71Z)	
Comprising:	
Cabinet	68535/003
Cloth, Fret, Black Colan CS1859	212192
Feet, Dome Slide (4 per box)	385053
Trim Assembly, Bottom	69940
Trim, Top, LH Cabinet	69935
Trim, Top, RH Cabinet	69936

Item	Part No.
Cowl Assembly, Light, Changer Compartment	69973
Escutcheon and Dial Scale Assembly	
Comprising:	
Dial Scale	65076
Escutcheon, Painted	69913
Incl. Tape, Bear Manning Y-9007 (33")	877677
Tape, Estafoam 3¼"	877672
Indicator, Power, Light Rod	67291
Knob, Control (4)	69927
Knob, P/Button, Light Grey	862184
Knob Tuning	69920
Microphone Assembly	67605
Record Changer, MA70 (B71, B74) 69967	201254
Comprising:	
Cartridge	C1
Stylus, Diamond/Sapphire	ST4
Record Changer, SL55 (B71Z) 68886	201251
Comprising:	
Cartridge, Sonotone	9TA
Stylus, Diamond/Sapphire	N9TAD/S
Table, Accessory (B74)	69970
CHASSIS FITTING	
Clamp, Body, Power Cable	208056
Clamp, Lock, Power Cable	208057
Cowl, Dial Scale Light 38470 (2)	255935
Drive Drum Assembly	62219
Gang Mounting:	
Grommet, 36826/002 (3)	389262
Screw, 4BA x ¼" Ch/Hd (3)	714008
Spacer (3)	35923
Washer, 4BA Flat (3)	15731
Insulator, Cover, P/B Switch 69943	255329
Insulator, Power Transformer	69150
Plate, Backing, Dial Scale	69921
Pointer Assembly	69911
Pulley, Dial Drive, Large	1730
Pulley, Dial Drive, Small (2)	17716
Shield, Light	42924
Spindle Assembly, Dial Drive	69925

NOTE: When ordering spares, always quote the above Part Numbers or Code Numbers, and in the case of coloured parts, such as knobs, etc., also quote the colour.

ADDENDUM B71/B74

The following modifications were incorporated in chassis produced after March, 1970.

Purpose: To suppress audible clicks caused by electrical appliances.

Modifications to the existing circuit shown in this manual are:

Added between base and emitter of VT103 and VT104 0.0047μF ±10% 100VW polyester capacitors C110 and C115 respectively.

Present C142 and C144, 0.001μF capacitors, deleted. Substituted in their place, between base and collector of VT107 and VT108, were two 100pF ±5% disc capacitors.

Added between base and emitter of VT105 and VT106 220pF ±10% K3000 disc capacitors C135 and C140 respectively.

Added between bases of VT105 and VT106, and coupling capacitors C138 and C136 are 4.7K ohms ±5% ½ watt resistors, R140 and R145 respectively.