MANUFACTURERS AWA SUPERVISED SERVICE

A.W.A. RADIOLA
Portable Television Receiver
Model P1

ISSUED BY AMALGAMATED WIRELESS (AUSTRALASIA) LTD.

GENERAL DESCRIPTION

Model P1 is a 14 valve, A.C. operated 11" portable television receiver. Serviceability and compactness are facilitated by a hinged printed board, while other features include a neutrode tuner, twin telescopic aerial and shatter-proof moulded cabinet.

ELECTRICAL AND MECHANICAL SPECIFICATIONS

INTERMEDIATE FREQUENCIES

Video I.F. Carrier Frequency ..... 36.875 Mc/s

Sound I.F. Carrier Frequency ..... 31.375 Mc/s

POWER CONSUMPTION: 120 watts maximum.

UNDISTORTED AUDIO POWER OUTPUT: 400mW.

FOCUS ..... Electrostatic (Low Voltage)

DEFLECTION ..... 110° Magnetic

TUNER TYPE ..... TB1 Part No. 45051

VALVE AND DIODE COMPLEMENT:

1 V1 Radiotron 6GK5 ..... R.F. Amplifier
2 V2 Radiotron 6HG8 ... R.F. Oscillator and Converter
3 V101 Radiotron 6CS6 ..... Quadrature Detector
4 V102 Radiotron 6EW6 ..... Audio Output
5 V201 Radiotron 6EH7 ..... 1st Video I.F.
6 V202 Radiotron 6EJ7 ..... 2nd Video I.F.
7 V203 Radiotron 6KV8 .... Video Amp. and Sync. Sep.
8 V204 Radiotron 11LP4 ..... Kinescope
9 V301 Radiotron 6CB6 ..... A.G.C. Amplifier
10 V302 Radiotron 6BM8 ..... Vert. Osc. and Output
11 V401 Radiotron 12AU7A ..... Hor. Oscillator
12 V402 Radiotron 6CM5 ..... Horizontal Output
13 V403 Radiotron 6AX4GT ..... Damper*
14 V404 Radiotron 1X2B ..... H.V. Rectifier

* Should not be replaced by a 6AU4GT or other substitute.

MR201 IN87A ..... Video Detector
MR301 M3 ..... A.G.C. Clamp
MR401 IN618 ..... Phase Discriminator
MR402 IN618 ..... Phase Discriminator
MR403 IN3194 ..... Rectifier
MR404 IN3194 ..... Rectifier

HIGH VOLTAGE WARNING

Operation of this receiver outside the cabinet involves a shock hazard from the receiver power supplies. Work on the receiver should not be attempted by anyone who is not thoroughly familiar with the precautions necessary when working on high voltage equipment. Make sure that the aquadag earth spring is making good contact before turning the receiver on.

PRINTED BOARD AND GENERAL SERVICING

Place the receiver face downwards on a soft cloth and remove the four slotted retaining nuts exposed.

Lift the cabinet back slightly upwards and unplug the mains isolating panel which is connected to the aerial leads from the tuner. The back may now be lifted clear of the chassis assembly.

Stand the receiver upright and the receiver is exposed for voltage checks and general servicing.

To gain access to the component side of the board, disconnect the tuner I.F. output and A.G.C. leads from the retaining clip mounted on the speaker and remove three screws securing the board to the mounting frame.

The board is now free to be hinged back through 90° without affecting the receiver operation.

If it is necessary to remove the board completely, disconnect the earth strap from the right-hand side and unplug all the interconnecting leads from the board. Unsolder the I.F. output and A.G.C. leads from the tuner.

Swing the board through a full 180° arc and lift it slightly to free the pivot hinges from the mounting frame.

Re-assembly is the reverse of the above procedure.

CHASSIS REMOVAL

The chassis need only be removed if the kinescope, implosion screen, speaker, front controls or some major items on the chassis require replacement. The procedure is as follows:—

Remove the front control knobs.

Remove the two screws securing the chassis to the cabinet front and stand the receiver upright.

Disconnect the kinescope socket, ultor lead, aquadag earth spring and unsolder the yoke leads on the vertical chassis.

Remove the nut securing the earphone socket to the cabinet front.

Slide the chassis back as far as possible and remove the four screws mounting the speaker.

With the speaker removed, the front control plate is detached from the cabinet front by removing two screws.

The complete chassis may now be removed from the cabinet front.

Re-assembly is the reverse of the above procedure taking note of the following points:—

With the board secured to its mounting frame, the tuner I.F. output and A.G.C. leads must be secured in the retaining clip on the top right-hand side of the speaker.

The aquadag earth spring must be in position.

The leads from the front controls and speaker should be dressed under the neck of the kinescope, as far as possible from the yoke.

KINESCOPE REMOVAL

First remove the complete chassis from the cabinet front as described in Chassis Removal.

Place the cabinet front assembly face down on a soft cloth and remove the four screws securing the kinescope mounting brackets.

The kinescope may now be lifted clear of the cabinet front.

When replacing the kinescope or fitting a new one the following points should be observed:—

Make sure that the face of the kinescope and the inside surface of the implosion screen are perfectly clean; a damp, soft, lint-free cloth will be satisfactory for this purpose.

The high voltage contact should be on the vertical chassis side of the cabinet.

Make sure that the rubber mounting spacers are in place on the brackets.

A piece of thermo-setting insulating tape should be affixed to the rear surface of the kinescope to prevent the damper valve making glass to glass contact with the kinescope.

REPLACEMENT OF FUSES

Fuses are provided for mains and high tension protection.

Both are accessible on removing the cabinet back and hinging the printed board through 90°. It is most important that the 1 amp. mains fuse be only of the anti-surge type.

HORIZONTAL HOLD ADJUSTMENT

Short circuit the sine wave coil, L401, and earth pin 2 of V203 (6KV8) sync. separator.

Adjust the horizontal hold control, RV401, until the picture is synchronised with the signal, i.e., picture sides are straight.

Remove the short circuit from the sine wave coil.

Adjust the core of the sine wave coil until the picture is synchronised with the signal.

Note: Two positions of the core may satisfy the above requirement. The correct setting is with the core furthest from the coil.

Remove the short circuit from pin 2 of V203.

Note: The above adjustments must be made with the printed board closed, since interaction of the deflection yoke with the sine wave coil necessitates re-adjustment of this coil.

A.G.C. ADJUSTMENT

The following adjustments can only be performed after all other receiver adjustments have been satisfactorily carried out.

Set the Contrast, A.G.C. and I.F. A.G.C. controls in their mid-positions.

With the receiver tuned to a medium strength signal (about 1mV), or suitable attenuated signal, make the following adjustments.

Adjust the A.G.C. control to give a reading of 130V d.c. at the wiper arm of the control. This reading should be taken on a Voltohmyst or a 20,000 ohms/volt meter.

With normal brightness and contrast settings, adjust the I.F. A.G.C. control for snow threshold.

Note: Clockwise rotation of the I.F. A.G.C. control increases snow, whilst a clockwise rotation of the A.G.C. control increases the video output.

CARE OF CABINET

A soft, lint-free cloth slightly dampened will remove most dirt marks from the plastic case.

A good quality perspex polish should be used to repair the surface of the safety screen when it becomes scuffed or marked.

ALIGNMENT PROCEDURE

TESTING INSTRUMENTS

To properly service the television receiver, it is recommended that the following testing equipment be available:—

1. A.W.A. Television Sweep Generator, type A56036.
2. A.W.A. Cathode Ray Oscilloscope (c.r.o.), type A56031.
3. [redacted]
   5.5 Mc/s F.M. Generator such as Advance SG63E.
4. A.W.A. Voltohmyst, type A56010.
5. A.W.A. Voltohmyst Probe, type 2R56020.
6. A.W.A. Universal Measuring Bridge, type A56048.
7. A.W.A. Television Calibrator, type A56057.

SOUND AND VIDEO I.F. ALIGNMENT

Note: When two positions of the core appear to give the correct adjustment, the following apply:—

* Coil tuned with core close to the printed board.

† Coil tuned with core close to can top remote from the printed board.

Sound I.F. Alignment.

Connect an f.m. signal generator to the Video Detector test point and set the frequency accurately to 5.5 Mc/s (signal level approximately 200mV).

Connect the Voltohmyst crystal probe to the video output test point and set the range switch to + 5 volts d.c.

Adjust L207* (5.5 Mc/s trap) for minimum reading on the Voltohmyst.

Connect the c.r.o. to the sound test point.

Switch the f.m. modulation of the signal generator to ± 50 Kc/s deviation and the modulating frequency 400 to 1,000 c/s. Insert 2.7K ohms between generator & test point.

With a signal strength of approximately 50-100mV, adjust the core of L101* for maximum amplitude and symmetrical sinusoidal wave.

Reduce the signal and adjust TR203, bottom core, for maximum output and top core† for symmetrical break-out as shown in Fig. 1. Break-out is shown on viewed audio as equal symmetrical distortion (noise) on both positive and negative tips of the wave form.

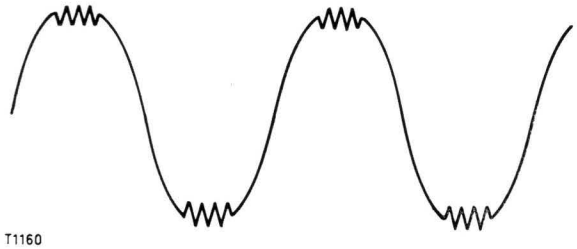

FIG 1

VIDEO I.F. ALIGNMENT

Turn RV301 to the extreme anti-clockwise position when viewed from the back of the printed board.

Connect a source of —6V bias to the video I.F. A.G.C. test point.

Connect the c.r.o. through a 100K ohms resistor to the Video Detector test point and the sweep generator (29-40 Mc/s sweep, correctly terminated) to the secondary of TR201.

"Loose couple" the marker generator to the active lead of the sweep generator whose output is set to give 1.5V p-p on the c.r.o.

Adjust TR202 and the top core of TR201† (30.875 Mc/s trap) to the required response as shown in Fig. 2.

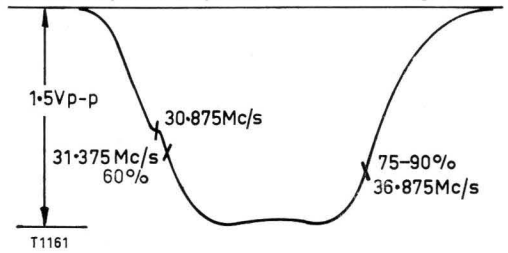

FIG. 2

With the tuner on a blank or unused channel, connect the sweep generator to the mixer grid of the tuner through the network shown in Fig. 3.

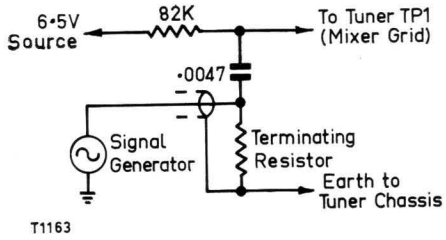

FIG. 3—

Adjust L2, L201* and TR201* to give a symmetrical curve as shown in Fig. 4.

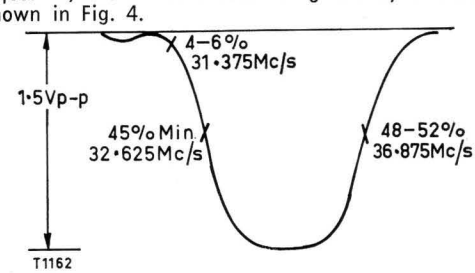

FIG. 4—

Note:
L2 mainly affects the carrier position.
L201* and TR201* mainly affect tilt and shape.
L201* maximum amplitude at approximately 32.625 Mc/s marker.

CIRCUIT CODE

RESISTORS

All Resistors composition type unless otherwise stated.

Code No.	DESCRIPTION			Part No.
R1	5.6K ohms	±20%	½ watt	611288
R2	1K ohms	±20%	½ watt	608030
R3	33K ohms	±20%	½ watt	614463
R4	2.2K ohms	±10%	1 watt	609446
R5	2.2K ohms	±20%	½ watt	609445
R6	4.7K ohms	±10%	1 watt	610966
R7	10K ohms	±20%	½ watt	612032
R8	Not used			
R9	2.2K ohms	±20%	½ watt	609445
R10	1 Megohm	±20%	½ watt	618020
R101	470 ohms	±10%	½ watt	606588
R102	39K ohms	±10%	½ watt	614684
R103	56K ohms	±10%	1 watt	615165
R104	68K ohms	±10%	½ watt (in L101)	615494
R105	150K ohms	±10%	½ watt	616426
R106	470K ohms	±10%	½ watt	617356
R107	10K ohms	±10%	½ watt	612025
R108	120 ohms	±10%	½ watt	601077
R201	6.8K ohms	±10%	½ watt	611526
R202	Not used			
R203	22 ohms	±5%	½ watt	602326
R204	22K ohms	±10%	1 watt	613658
R205	220 ohms	±20%	½ watt	605256
R206	3.3K ohms	±10%	½ watt(in TR201)	610304
R207	150 ohms	±10%	½ watt	604677
R208	220 ohms	±20%	½ watt	605256
R209	15K ohms	±10%	½ watt	612922
R210	2.7K ohms	±10%	½ watt	609862
R211	470 ohms	±10%	½ watt	606588
R212	33 ohms	±10%	½ watt	602752
R213	33 ohms	±10%	½ watt	602752
R214	4.7K ohms	±10%	2 watts	610962
R215	39K ohms	±10%	1 watt	614691
R216	4.7K ohms	±10%	5 watts W.W.	610958
R217	3.9K ohms	±20%	½ watt	610561
R218	3.3K ohms	±10%	½ watt	610304
R219	220K ohms	±10%	½ watt	616721
R220	680K ohms	±10%	½ watt	617666
R221	6.8K ohms	±10%	½ watt	611526
R301	4.7 Megohms	±10%	1 watt	618941
R302	680K ohms	±10%	1 watt	617669
R303	270K ohms	±10%	1 watt	616959
R304	33K ohms	±10%	½ watt	614460
R305	150K ohms	±10%	1 watt	616430
R306	180K ohms	±10%	1 watt	616568
R307	Not used			
R308	47K ohms	±10%	1 watt	614969
R309	47K ohms	±10%	1 watt	614969
R310	33K ohms	±10%	½ watt	614460
R311	1.5 Megohms	±10%	½ watt	618260
R312	680K ohms	±10%	½ watt	617666
R313	100K ohms	±10%	½ watt	616017
R314	100K ohms	±10%	½ watt	616017
R315	33K ohms	±10%	½ watt	614460
R316	220K ohms	±10%	½ watt	616721
R317	18K ohms	±10%	½ watt	613306
R318	Not used			
R319	82K ohms	±10%	½ watt	615795
R320	10K ohms	±10%	1 watt BTAV	612054
R321	1 Megohm	±10%	1 watt	618021
R322	Not used			
R323	2.2 Megohms	±10%	½ watt	618484
R324	100K ohms	±10%	1 watt	616020
R325	1.2 Megohms	±10%	½ watt	618141
R326	27K ohms	±10%	1 watt BTAV	614153
R327	330K ohms	±10%	1 watt BTAV	617115
R328	47K ohms	±10%	½ watt	614961
R329	1.2 Megohms	±10%	½ watt	618141
R330	1 Megohm	±10%	1 watt	618021
R331	2.2 Megohms	±10%	½ watt	618484
R332	220 ohms	±10%	1 watt	605257
R333	150 ohms	±10%	½ watt	604677
R334	150 ohms	±10%	½ watt	604677
R335	150K ohms	±10%	½ watt	616426
R336	1.2 Megohms	±10%	½ watt	618141
R401	470K ohms	±10%	½ watt	617356
R402	470K ohms	±10%	½ watt	617356

RESISTORS (Continued)

Code No.	DESCRIPTION			Part No.
R403	470K ohms	±10%	½ watt	617356
R404	33K ohms	±10%	½ watt	614460
R405	33K ohms	±10%	1 watt	614464
R406	100K ohms	±10%	½ watt	616017
R407	2.2K ohms	±10%	½ watt	609442
R408	68K ohms	±10%	1 watt	615500
R409	39K ohms	±10%	1 watt	614691
R410	560K ohms	±10%	1 watt	617527
R411	Not used			
R412	10K ohms	±10%	½ watt	612025
R413	47K ohms	±10%	1 watt	614969
R414	680K ohms	±10%	½ watt	617666
R415	2.7K ohms	±10%	5 watts W.W.	609879
R416	1 Megohm	±10%	1 watt	618021
R417	820K ohms	±10%	1 watt BTAV	617848
R418	4.7K ohms	±10%	1 watt	610966
R419	2.7 ohms	±10%	½ watt W.W.	600445
R420	820K ohms	±10%	1 watt	617846
R421	Not used			
R422	1.5K ohms	±10%	5 watts W.W.	608718
R423	680 ohms	±10%	5 watts W.W.	607290
RV101	500K ohms Curve "C" Carbon, Volume W/S			620496
RV201	15K ohms Curve "A" Carbon, Contrast			620222
RV301	500K ohms Curve "A" Carbon, I.F., A.G.C.			620451
RV302	50K ohms Curve "A" Carbon, A.G.C.			620282
RV303	500K ohms Curve "A" Carbon, Vert. Hold			620450
RV304	250K ohms Curve "A" Carbon, Top Lin.			620493
RV305	250K ohms Curve "A" Carbon, Height			620493
RV306	50K ohms Curve "A" arbon, Vert. Lin.			620282
RV307	500K ohms Curve "A" Carbon, Brightness			620495
RV401	50K ohms Curve "A" Carbon, Hor. Hold			620283
RV402	1 Megohm Curve "A" Carbon, Width			620769

CAPACITORS

Code No.	DESCRIPTION	Part No.
C1	3.3pf ±10% NPO disc	220164
C2	2.2pf ±5% NPO disc	221494
C3	18pf ±5% NPO feed thru	220776
C4	3.3pf ±10% NPO disc	220164
C5	15pf ±5% NPO disc	220710
C6	0.001μf +100% —0% Hi-K feed thru	225011
C7	1-5pf trimmer	231144
C8	0.5-3pf trimmer	231122
C9	100pf ±7½% N3300 feed thru	222246
C10	27pf ±5% NPO disc	221071
C11	0.001μf +100% —0% Hi-K feed thru	225011
C12	0.5-3pf trimmer	231122
C13	0.001μf +100% —0% Hi-K feed thru	225011
C14	0.68pf special	49915
C15	470pf ±20% K2000 tubular	221972
C16	56pf ±10% N750 tubular	221774
C17	5.6pf +5% —0% N150 disc	220274
C18	5.6pf ±2½% N150 disc	220276
C19	5.6pf +0% —5% N150 disc	220275
C20	0.001μf +100% —0% Hi-K feed thru	225011
C21	0.033μf ±10% 125VW polyester	226739
C22	220pf ±20% Hi-K disc	223205
CN	Neutralising capacitance	
C101	270pf ±20% K2000 tubular	223550
C102	2μf 300VW Electrolytic	227923
C103	6.8pf ±10% N750 disc (in L101)	220382
C104	0.22μf ±10% 125VW polyester	227341
C105	270pf ±20% K2000 tubular	223550
C106	0.0068μf ±10% 400VW polyester	226218
C107	0.0039μf ±10% 400VW polyester	225863
C201	0.0047μf +100% —0% K5000 disc	225980
C202	0.0047μf +100% —0% K5000 disc	225980
C203	27pf ±5% NPO disc (in TR201)	221071
C204	0.001μf ±10% 400VW polyester	225060
C205	0.0047μf +100% —0% K5000 disc	225980
C206	0.0047μf +100% —0% K5000 disc	225980
C207	0.0047μf +100% —0% K5000 disc	225980
C208	0.001μf ±10% 400VW polyester	225060
C209	4.7pf ±5% NPO tubular (in TR202)	220219
C210	10pf ±5% NPO disc (in TR202)	220456
C211	0.0047μf +100% —0% K5000 disc	225980
C212	4.7pf ±10% N750 disc (in TR203)	220215
C213	33pf ±5% NPO tubular (in TR203)	221161

Code No.	DESCRIPTION	Part No.
	CAPACITORS (Continued)	
C214	0.027μf ±10% 400VW polyester	226690
C215	0.0082μf ±10% 400VW polyester	226293
C216	2μf 300VW Electrolytic	227923
C217	6.8pf ±10% N750 disc	220382
C218	47pf ±10% N750 disc	221438
C219	47pf ±10% N750 disc	221438
C220	12pf ±10% N750 disc	220550
C221	0.22μf ±10% 125VW polyester	227342
C301	Not Used	
C302	0.1μf ±10% 125VW polyester	227086
C303	0.0039μf ±10% 400VW polyester	225863
C304	0.022μf ±10% 400VW polyester	226636
C305	0.1μf ±10% 400VW polyester	227090
C306	560pf ±10% N1500 2500VW tubular (in TR401)	224484
C307	0.1μf ±10% 400VW polyester	227090
C308	0.0047μf ±10% 400VW polyester	225953
C309	220pf ±10% 600VW polystyrene	223206
C310	0.033μf ±10% 400VW polyester	226739
C311	0.027μf ±10% 125 VW polyester	226690
C312	0.027μf ±10% 125VW polyester	226690
C313	0.033μf ±10% 400VW polyester	226739
C314	0.022μf ±10% 400VW polyester	226636
C315	2μf 450VW Electrolytic	227922
C316	0.0068μf ±10% 400VW polyester	226234
C317	0.01μf ±10% 125VW polyester	226378
C318	0.1μf ±10% 400VW polyester	227090
C319	0.0068μf ±10% 1800VW paper	226241
C320	0.1μf ±10% 400VW polyester	227090
C321	0.1μf ±10% 125VW polyester	227086
C322	0.047μf ±10% 400VW polyester	226802
C323	0.22μf ±10% 125VW polyester	227341
C324	0.0022μf ±10% 400VW polyester	225636
C325	150μf 200VW Electrolytic	229737
C401	150pf ±10% 600VW polystyrene	222698
C402	150pf ±10% 600VW polystyrene	222698
C403	0.0047μf ±10% 400VW polyester	225953
C404	0.001μf ±10% 400VW polyester	225060
C405	0.0047μf ±10% 400VW polyester	225953
C406	0.047μf ±10% 125VW polyester	226804
C407	0.0027μf ±10% 400VW polyester	225746
C408	680pf ±10% 600VW polystyrene	224777
C409	680pf ±10% 600VW polystyrene	224777
C410	0.001μf ±10% 400VW polystyrene	225062
C411	22pf ±10% NPO tubular	220889
C412	0.1μf ±10% 400VW polyester	227085
C413	0.01μf ±10% 125VW polyester	226378
C414	0.047μf ±10% 600VW paper	226835
C415	0.047μf ±10% 1000VW paper	226831
C416	270pf ±10% N750 2500VW disc	223554
C417	0.033μf ±10% 400VW polyester	226739
C418	270pf ±10% N750 2500VW tubular (in TR401)	223560
C419	270pf ±10% N750 2500VW disc	223554
C420	100μf 200VW Electrolytic	229728
C421	0.1μf ±10% 400VW polyester	227085
C422	100μf 200VW Electrolytic	229728
C423	100μf 125VW Electrolytic	229729
C424	100μf 125VW Electrolytic	229729
C425	47pf ±10% N750 disc	221438
C426	0.1μf ±10% 125VW polyester	227086
	INDUCTORS	
L1	36.875 Mc/s Trap	41859
L2	Converter I.F. Coil	41859
L3	Not used	
L4	Oscillator Filament Choke	41866
L5	Screen Inductor Coil	45017
La-Lh	Tuning Coil Assembly	
	Channel 0	45055
	Channel 1	45056
	Channel 2	45057
	Channel 3	45058
	Channel 4	45059
	Channel 5	45060
	Channel 5A	45061
	Channel 6	45062
	Channel 7	45063
	Channel 8	45064
	Channel 9	45065
	Channel 10	45066
	Channel 11	45067
L101	Quadrature Detector Coil	52714
L201	Video I.F. Input Coil }	52718
L202	Video I.F. R.F. Choke }	
L203	Filament Choke	52739
L204	Detector Filter Coil	52720
L205	Detector Filter Coil	41423
L206	Detector Filter Coil	49671
L207	5.5 Mc/s Trap	52721
L208	Video Amp. Peaking Coil	40117
L209	Video Amp. Peaking Coil	45021
L210	Video Amp. Peaking Coil	45020
L301	Vertical Deflection Coil } Yoke	44900
L302	Vertical Deflection Coil }	
L401	Sine Wave Coil	52191
L402	H.F. Choke	214516
L403	Horizontal Linearity Coil	43264
L404	Horizontal Deflection Coil } Yoke	44900
L405	Horizontal Deflection Coil }	
L406	H.T. Filter Choke	52602
	TRANSFORMERS	
TR1	Balun Assembly	44009
TR101	Speaker Transformer	52606A
TR201	1st Video I.F.	52722
TR202	2nd Video I.F.	52724
TR203	Sound Take-off	52716
TR301	Vertical Output	52691A
TR401	Horizontal Output	52520
TR402	Power	52600
	VALVES and DIODES	
V1	Radiotron 6GK5	
V2	Radiotron 6HG8	
V101	Radiotron 6CS6	
V102	Radiotron 6EW6	
V201	Radiotron 6EH7	
V202	Radiotron 6EJ7	
V203	Radiotron 6KV8	
V204	Radiotron 11LP4	
V301	Radiotron 6CB6	
V302	Radiotron 6BM8	
V401	Radiotron 12AU7	
V402	Radiotron 6CM5	
V403	Radiotron 6AX4-GT	
V404	Radiotron 1X2-B	
MR201	IN87A	
MR301	M3	
MR401	IN618	
MR402	IN618	
MR403	IN3194	
MR404	IN3194	
	MISCELLANEOUS	
FS401	1 Amp. Fuse	370030
FS402	1 Amp. Fuse (Anti-Surge)	369954
LS101	6" x 2" Speaker	50272
JK101	Sound Outlet Jack	
SW401	Power Switch (on RV101)	
TH301	1 ohm at 25° C. NTC Thermistor	893707

PRINTED BOARD LAYOUT

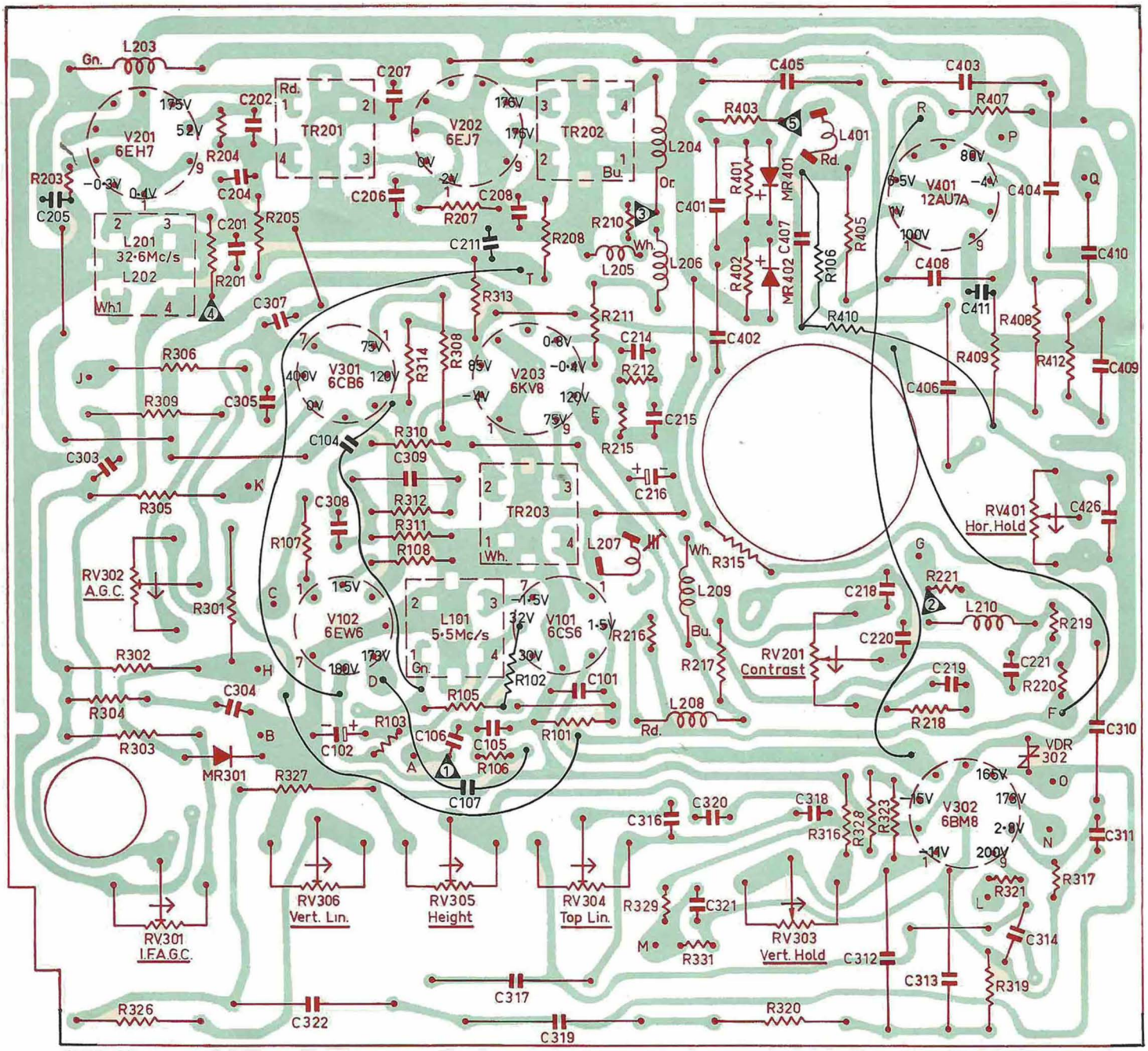

T1168 RB

Represent Test Points as follows 1. Sound Test 2. Video Output 3. Video Detector 4. I.F. A.G.C. Test 5. Phase Discriminator Output.

Notes: The diagram represents the view from the wiring side of the printed board.
Red indicates components and leads mounted on the remote side of the board.
Black indicates those components and leads mounted on the wiring side of the board.
All voltages shown are measured with no signal input and controls set normally using a 20,000 ohm/volt meter.

LOCATION CHART

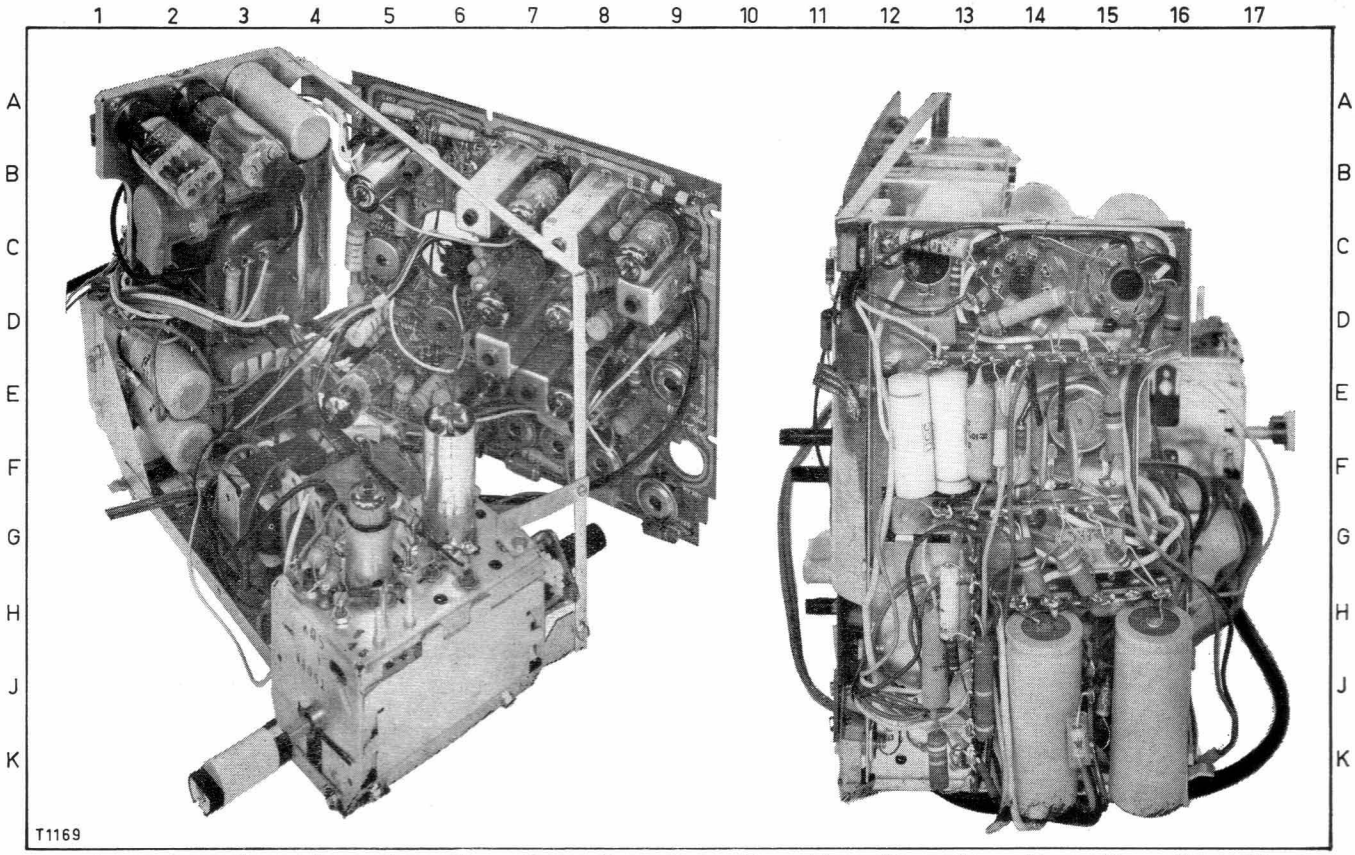

COMPONENT	LOCATION
RESISTORS	
R101	E6
R102	E7 (at rear)
R103	E7
R104	E7 (in L101)
R105	E7
R106	E7
R107	D8
R108	D8
R201	C8
R202	Not used
R203	C9
R204	C8
R205	C8
R206	B8
R207	C7
R208	C7
R209	B6
R210	B6
R211	C7
R212	C7
R213	C7
R214	J13
R215	K13
R216	D6
R217	D6
R218	D5
R219	C5
R220	D5
R221	D5
R301	E8
R302	E9
R303	F9
R304	E9
R305	D9
R306	D9
R307	Not used
R308	C7
R309	D9
R310	D7
R311	D8
R312	D8
R313	C7
R314	C8
R315	D6
R316	E6
R317	E5
R318	Not used
R319	E5
R320	E5
R321	E5
R322	Not used
R323	E5
R324	G14
R325	F14
R326	G9
R327	F8
R328	E6
R329	F6
R330	D16
R331	E6
R332	J13
R333	In Yoke
R334	In Yoke
R335	G15
R336	J13
R401	B6
R402	B6
R403	B6
R404	C5
R405	B6
R406	B6 (at rear)
R407	A5
R408	B5
R409	B5
R410	C5 (at rear)
R411	Not used
R412	B5
R413	F15
R414	C13
R415	D12
R416	E15
R417	D14
R418	In Yoke
R419	C2
R420	F14
R421	Not used
R422	J13
R423	G15
RV101	Front Control
RV201	D6
RV301	G7
RV302	E9
RV303	E6
RV304	F7
RV305	F7
RV306	F8
RV307	Front Control
RV401	C5
RV402	E15
CAPACITORS	
C101	E7
C102	E8
C103	E7
C104	D8 (at rear)
C105	E7
C106	E7
C107	E7 (at rear)
C201	C8
C202	B8
C203	B8
C204	C8
C205	C9 (at rear)
C206	B8
C207	B8
C208	C7
C209	B7
C210	B7
C211	C7 (at rear)
C212	D7
C213	D7
C214	C6
C215	C6
C216	D6
C217	D6
C218	D5
C219	D5
C220	D5
C221	D5
C301	Not used
C302	F9
C303	D9
C304	E8
C305	D8
C306	D3
C307	D8
C308	D8
C309	D8
C310	D5
C311	D5
C312	E5
C313	E5
C314	E5
C315	E14
C316	E6
C317	F7
C318	E6
C319	F7
C320	E6
C321	E6
C322	F8
C323	J13
C324	H13
C325	A3
C401	B6
C402	B6
C403	A5
C404	A5
C405	A6
C406	C5
C407	B6
C408	B5
C409	B5
C410	B5
C411	B5 (at rear)
C412	F13
C413	C13
C414	F13
C415	F12
C416	F15
C417	H15
C418	D3
C419	F14
C420	H16
C421	H13
C422	H13
C423	E2
C424	F2
C425	F15
C426	C5
INDUCTORS	
L101	E7
L201	C9
L202	C9
L203	B9
L204	B6
L205	C6
L206	C6
L207	D6
L208	D6
L209	D6
L210	D5
L301	Yoke
L302	Yoke
L401	B6
L402	D14
L403	D2
L404	Yoke
L405	Yoke
L406	E3
TRANSFORMERS	
TR101	On Speaker
TR201	B8
TR202	B7
TR203	D7
TR301	F4
TR401	C3
TR402	G4
VALVES & DIODES	
V101	E6
V102	E7
V201	C9
V202	B7
V203	C7
V204	Kinescope
V301	D7
V302	E5
V401	B5
V402	B3
V403	B2
V404	B3
MR201	B7
MR301	F8
MR401	B6
MR402	B6
MR403	J5
MR404	K5
MISCELLANEOUS	
FS401	F4
FS402	F4

D.C. RESISTANCE OF WINDINGS

WINDING	D.C. RESISTANCE IN OHMS
Tuner Windings	*
L101 Quadrature Detector Coil	7
L201 Video I.F. Input Coil	*
L202 Video I.F. R.F. Choke	1.5
L203 Filament Choke	*
L204 Detector Filter Coil	1.5
L205 Detector Filter Coil	5
L206 Detector Filter Coil	*
L207 5.5 Mc/s Trap	7
L208 Video Ampl. Peaking Coil	6.5
L209 Video Ampl. Peaking Coil	2.7
L210 Video Ampl. Peaking Coil	3.8
L301 Vertical Deflection Coil	2.5
L302 Vertical Deflection Coil	2.5
L401 Sine Wave Coil	55
L402 H.F. Choke	*
L403 Horizontal Linearity Coil	7
L404 Horizontal Deflection Coil	17
L405 Horizontal Deflection Coil	17
L406 H.T. Filter Choke	25
TR101 Speaker Transformer	
Primary	1300
Secondary	2.8
TR201 1st Video I.F.	
Primary	*
Secondary	*
TR202 2nd Video I.F.	
Primary	*
Secondary	*
TR203 Sound Take-off	
Primary	1.5
Secondary	3.0
TR301 Vertical Output	
Primary	190
Secondary	2.2
TR401 Horizontal Output	
Primary 4-6	40
Secondary 3-6	28
Tertiary 4-Top Cap	360
Tertiary 7-8	2.9
TR402 Power Transformer	
Primary	20
Secondary	5.5
Heater Winding	*

* Less than 1 ohm.

The above readings were taken on a standard chassis, but substitution of materials during manufacture may cause variations, and it should not be assumed that a component is faulty if a slightly different reading is obtained.

MECHANICAL REPLACEMENT PARTS

Aerial, Telescopic (2)	103553
Cabinet, Body Assembly	45213
This includes	
Cabinet, Body	60261
Handle	45204
Hook, Power Cable	45220
Cabinet Front Assembly	45200
This includes	
Cabinet Front	45201
Fret Assembly	45214
Trim, Channel Selector	45222
Coupling, Channel Selector	45224
Extension, Fine Tuning	45216
Hearing Aid	307002
Hinge Plate, Bottom	45235
Hinge Plate, Top	45234
Insulator Aerial	45479
Jack, Sound Outlet	417019
Knob Assembly (2)	45209
Knob Assembly, Channel Selector	45212
Panel Assembly, Mains Isolating	43275
Screen, Implosion	45202
Spring Terminal Assembly	64237

Printed by A. W. Bounds Pty. Ltd., 11 Arundel Street, Glebe, Sydney

TB1 (45051) NEUTRODE TURRET TUNER

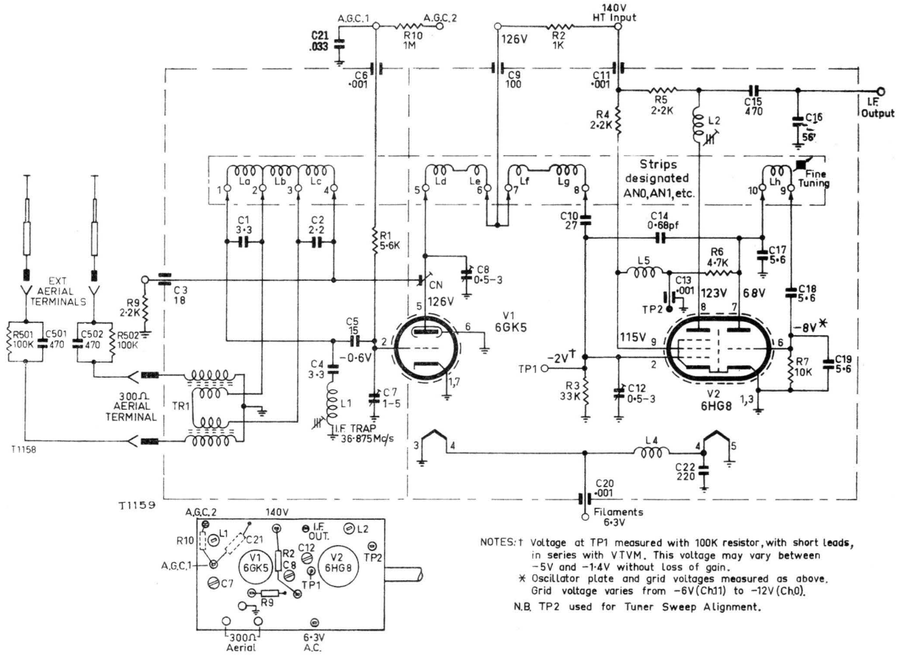

NOTES: † Voltage at TP1 measured with 100K resistor, with short leads, in series with VTVM. This voltage may vary between −5V and −1·4V without loss of gain.
* Oscillator plate and grid voltages measured as above. Grid voltage varies from −6V (Ch11) to −12V (Ch0).
N.B. TP2 used for Tuner Sweep Alignment.

CIRCUIT VARIATIONS

To improve horizontal stability at the top of the picture:

C403 has been changed to 0.0022pf ±10% 400VW polyester capacitor 225636 and R410 is now a 470K ohms ±10% 1 watt resistor 617359.

In early chassis R107 was 47K ohms. This is now a 10K ohms to reduce pick-up of vertical pulses in the audio.

Early chassis also used 52604A Vertical Output transformer (TR301).

TELEVISION RECEIVER CHASSIS — 4600 SERIES