MECHANICAL PARTS LIST

Description	Code No.	Description	Code No.
Dial backplate—AT2	CS.242.390	Knob—tuning	CR.524.502
Dial backplate—AT3	CS.242.393	Knob—volume, 2x (1 active, 1 dummy) (front)	CR.524.500
Dial cord—AT2 only, 17" required	CE.085.91	Knob—tone (rear)	CS.432.599
Dial cursor—AT2 only	CR.480.705	Plug—polarity ch./over	CZ.365.328
Dial drive spring—AT2 only	CS.200.074		C/F 691-6-17
Dial scale—AT2	CS.412.508	Plug—speaker	C.762/106
Dial scale—AT3	CS.412.509	Socket—aerial	CZ.369.930
Escutcheon assy.—front, AT2	CR.520.038	Socket—polarity ch./over	CZ.370.527
Escutcheon front—AT3	CS.430.176		C/F 733-16-23
Fuseholder (MSP 36546)	CZ.371.116	Socket—speaker	C.762/004
Lampholder—AT2	CZ.367.720	Screw—dial scale mtg. 2x	CS.261.867
Lampholder—AT3	CZ.367.723	Wordmark—"Philips"	CS.436.561

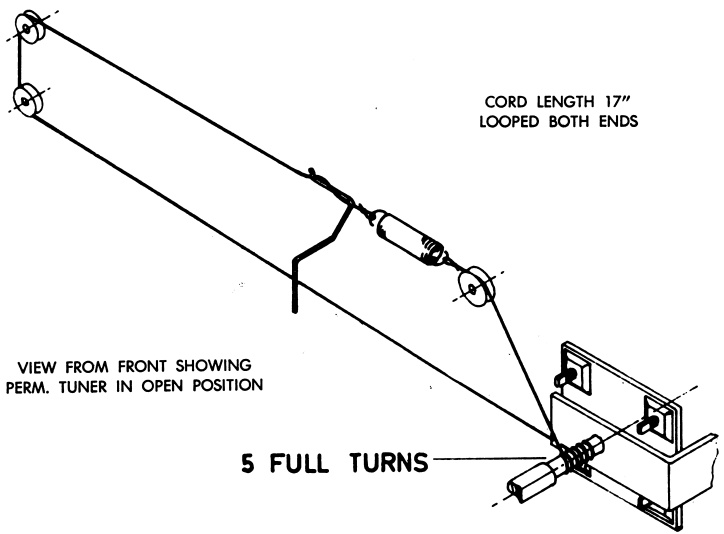

PHILIPS Service notes

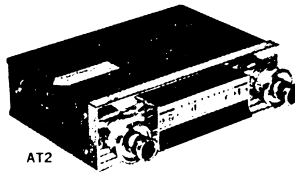

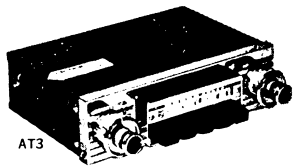

MODELS AT2 & AT3

Both receivers are basically the same, AT2 is manual, AT3 push-button operation

SPECIFICATIONS

Tuning range	530-1620 kc/s
Intermediate frequency	455 kc/s
Power supply	12V car battery only
Battery consumption	See table below
Fuse	750 mA
Dial lamp, AT2	Type 12913
AT3	Type 12829
Speaker impedance	15 Ω
Aerial input capacitance	60pF

CHASSIS REMOVAL

Top and bottom covers can be taken off by removing two screws for each cover from the rear of the receiver. The printed base board can be released from the receiver by removing the clamp for the speaker and battery leads, unsoldering C218 (250 µF/16V electro.) from the lug strip, then by depressing the two spring clips at the corners of the board it may be rotated through 90° to allow access to modules and other components.

Refitting is a reversal of this procedure.

ALIGNMENT

Location of the various trimming points used in alignment is shown in the interconnection drawing.

I.F. Alignment

Open permeability tuner and connect signal generator via I.F. dummy to base of TR1. Put volume control to maximum and tone control in treble position. Detune secondaries of first and second I.F.T.s by screwing out cores about one turn. Peak cores in the order of the table.

Third I.F.T.	455 kc/s
Second I.F.T. primary	454 kc/s
First I.F.T. primary	454 kc/s
Second I.F.T. secondary	456 kc/s
First I.F.T. secondary	456 kc/s
Repeak third I.F.T. at	455 kc/s

R.F. Alignment

On the dial scale are shown calibration marks for 1620 kc/s, 1500 kc/s and 600 kc/s. Connect signal generator to aerial terminal through dummy aerial. Fully open permeability tuner and set dial cursor to 1620 kc/s calibration mark. Peak C215 trimmer to 1620 kc/s signal from generator.

Adjust generator to 1500 kc/s and tune receiver to 1500 kc calibration mark. Peak C201, C203 and C210 trimmers at th frequency.

Adjust generator to 600 kc/s and tune receiver to 600 kc calibration mark. Peak oscillator coil core whilst rocking tun back and forth over signal.

Repeat these adjustments until no improvement is achieve

OUTPUT TRANSISTOR ADJUSTMENT

Provision is made by means of metering points for insertion a meter for adjustment of output transistor current by means R108. Current should be adjusted, at no signal, in accordan with the following table. This table includes total receiv current.

Temp. °F.	RT103/104 Current (mA)	Receiver Current (m
50	2.0	15.6
55	2.2	15.8
60	2.4	16.05
65	2.6	16.3
70	2.8	16.7
75	3.0	17.05
80	3.25	17.4
85	3.5	17.8
90	3.75	18.3
95	4.0	18.7
100	4.3	19.1
105	4.6	19.7
110	4.9	20.2
115	5.3	20.8

P3. PHILIPS MODEL AT2-AT3

| | | |

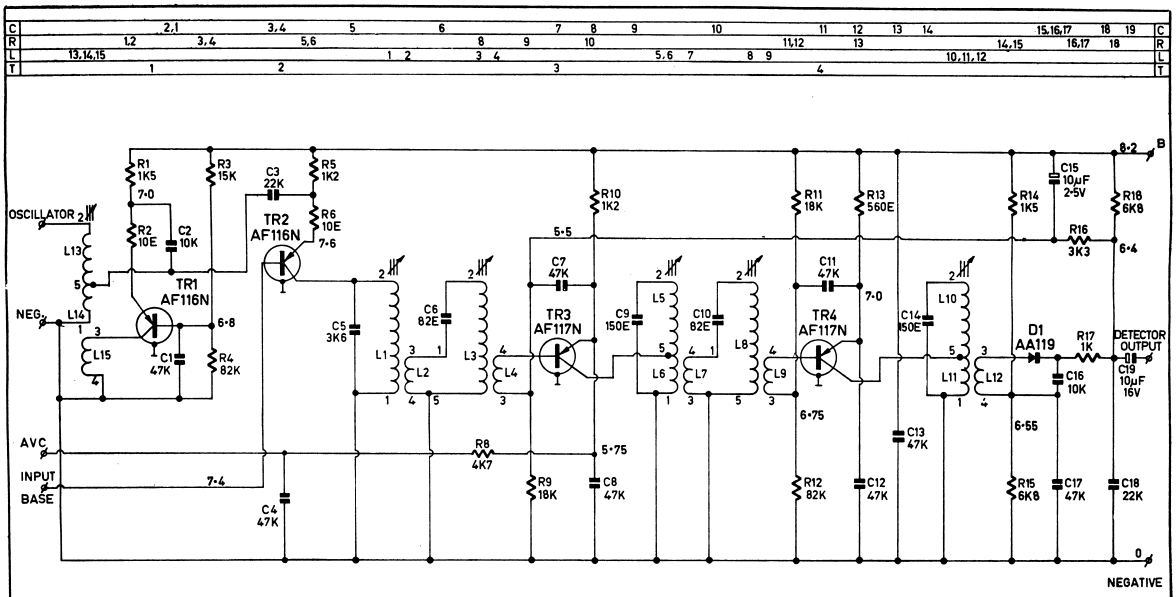

RESISTORS ARE ± 10%

VOLTAGES MEASURED WITH V.T.V.M.— NO SIGNAL

ALL TRANSISTOR SHIELD LEADS ARE CONNECTED TO NEGATIVE.

INPUT BASE VOLTAGE IS OBTAINED FROM POTENTIAL DIVIDER ACROSS 8·2 VOLT SUPPLY 47K TO NEGATIVE AND 4K7 TO POSITIVE

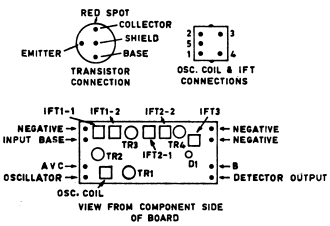

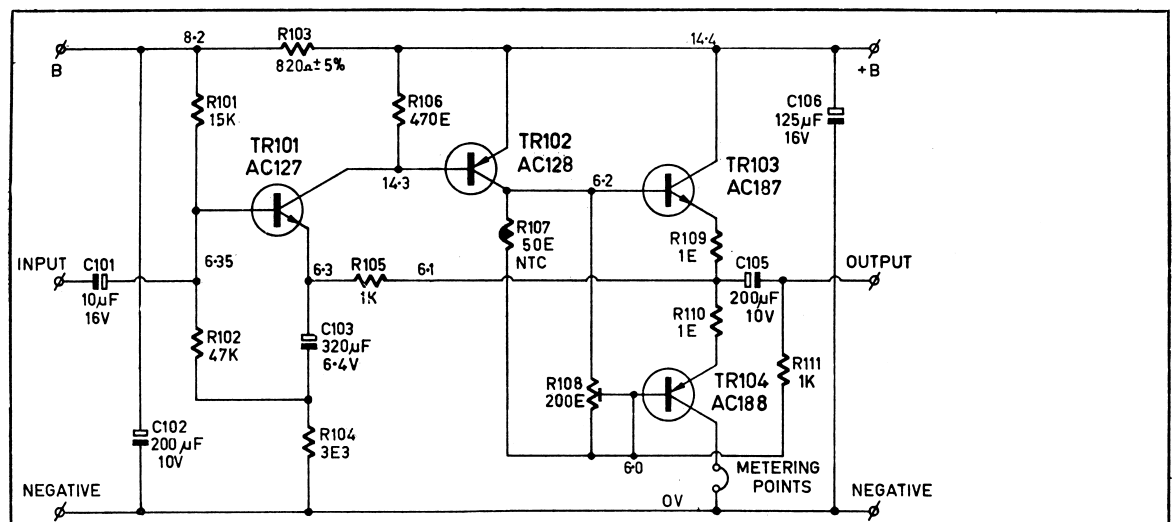

NOTE ON CONDENSERS:
WHOLE NUMBERS – pF UNLESS INDICATED OTHERWISE.
TOLERANCE POLYESTERS: ± 10%
TOLERANCE ELECTROLYTICS: – 10 + 50%

RESISTORS ARE ± 10% UNLESS INDICATED OTHERWISE.

VOLTAGES MEASURED WITH VTVM AND 1K5 ± 10% CONNECTED BETWEEN B AND NEGATIVE.

ZERO SIGNAL COLLECTOR CURRENT TR103/TR104 IS SET BY MEANS OF R108 TO 3·0mA AT 75°F.

COLLECTOR PNP: RED SPOT
COLLECTOR NPN: BLUE SPOT

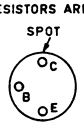

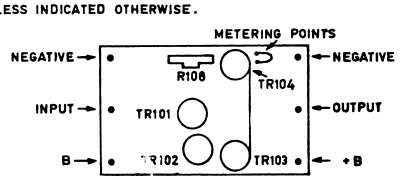

VIEW FROM COMPONENT SIDE OF BOARD

PHILIPS Service notes

MODEL AT2

SUPPLEMENTARY SHEET

NOTE: Model AT2 has been modified by the use of a new audio module (UA407) and some variation in interconnection circuitry. Main servicing information is given in the combined data sheet for Models AT2 and AT3. In this sheet is given the circuit of the new module UA407, drawing showing the variation in interconnection circuitry and details of component changes associated with the modification. For all other information refer to the sheet for Models AT2 and AT3.
Identification as to original or modified receiver can be made by reference to the colour coding of the audio module. Original version—UA405 yellow black green, modified version—UA407 yellow black violet.

COMPONENTS

The following are changes in components to the lists of AT2/AT3 sheet.

C205	680E	Styroseal, 100V, ±10%, Ducon DFB.
C209	680E	Styroseal, 100V, ±10%, Ducon DFB.
C213	3K3	Styroseal, 100V, ±10%, Ducon DFB.
R103	680E	cracked carbon, 1/8W, ±10%, B8.031.04NB/A680E.

The following are components additional to the lists of AT2/AT3 sheet and are shown in the drawing below.

C216	220K	ceramic, 25V, +80%—20%, Ducon CDR.
R209	2K2	cracked carbon, 1/8W, ±10%, B8.031.04NB/A2K2.

VOLTAGES

Associated with the use of module UA407, voltages in the RF module and interconnection circuitry have changed. New voltages are given in the table below.

POINT \ TRANSISTOR	TR1	TR2	TR3	TR4	TR201
Emitter	—	8.6	6.5	7.95	6.8
Base	7.8	8.4	6.25	7.7	6.6
Collector	—	—	—	—	0.9

Junc. R1/R2 7.95	Junc. L12/R15 7.45	Junc. R16/R18 7.3
"B" lug 9.3	"Base" lug 8.4	"AVC" lug 6.5

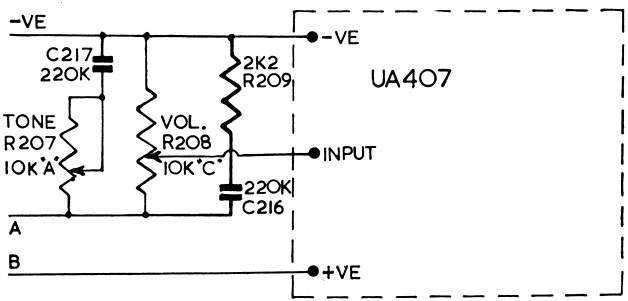

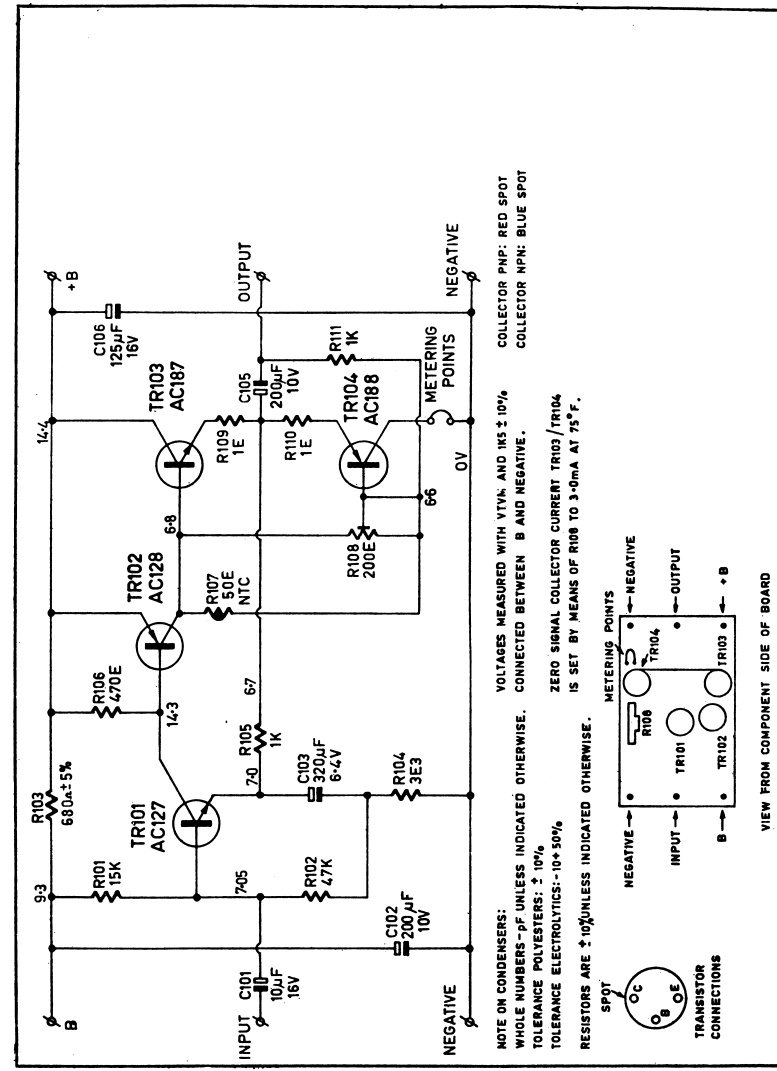

PHILIPS Service notes

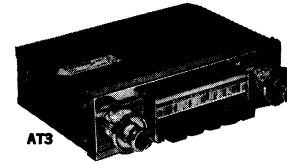

MODEL AT3

NOTE: This sheet covers later production of this receiver, i.e., using modules UF405 and UA407 as against earlier production using UF403 and UA405. Servicing information for earlier production receivers is given in the combined sheet for Models AT2 and AT3. UF405 is stagger tuned UF403.

Identification of production series of Model AT3 can be made by reference to the colour coding of the modules. Early production—UF403 yellow black orange, UA405 yellow black green; later production — UF405 yellow black green, UA407 yellow black violet. UF indicates RF module, UA indicates audio module.

SPECIFICATIONS

Tuning Range	530-1620 kc/s.
Intermediate frequency	455 kc/s.
Power supply	12V car battery only
Battery consumption	see table below
Fuse	750 mA
Dial lamp	type 12829
Speaker impedance	15Ω
Aerial input capacitance	60pF

CHASSIS REMOVAL

Top and bottom covers can be taken off by removing two screws for each cover from the rear of the receiver. The printed base board can be released from the receiver by removing the clamp for the speaker and battery leads, unsoldering C218 (250 µF/16V electro), from the lug strip, then by depressing the two spring clips at the corners of the board it may be rotated through 90° to allow access to modules and other components. Refitting is a reversal of this procedure.

OUTPUT TRANSISTOR ADJUSTMENT

Provision is made by means of metering points for insertion of a meter for adjustment of output transistor current by means of R108. Current should be adjusted, at no signal, in accordance with the following table. This table includes total receiver current.

Temp. °F.	TR103/104 Current (mA)	Receiver Current (mA)
50	2.0	15.6
55	2.2	15.8
60	2.4	16.05
65	2.6	16.3
70	2.8	16.7
75	3.0	17.05
80	3.25	17.4
85	3.5	17.8
90	3.75	18.3
95	4.0	18.7
100	4.3	19.1
105	4.6	19.7
110	4.9	20.2
115	5.3	20.8

ALIGNMENT

Location of the various trimming points used in alignment is shown in the interconnection drawing.

I.F. Alignment

Open permeability tuner, put volume control to maximum and tone control to treble. Connect signal generator to base of TR1 through normal I.F. dummy. Peak cores at the specified frequencies, in the following order:

1st I.F.T. primary	457.5 kc/s.
1st I.F.T. secondary	452.5 kc/s.
2nd I.F.T. primary	458.5 kc/s.
2nd I.F.T. secondary	451.5 kc/s.
3rd I.F.T.	455.0 kc/s.

Repeat procedure twice.

R.F. Alignment

On the dial scale are shown calibration marks for 1620 kc/s, 1500 kc/s and 600 kc/s. Connect signal to aerial terminal through dummy aerial.

Fully open permeability tuner and set dial cursor to 1620 kc/s mark. Peak C215 to 1620 kc/s signal from generator. Adjust generator to 1500 kc/s and tune receiver to 1500 kc/s mark—peak C201, C203 and C210 at this frequency.

Adjust generator and tune receiver to 525 kc/s (end of band).

Adjust oscillator coil core, in combination with rocking the tuning, to peak at this frequency.

Repeat these adjustments until no improvement is achieved.

P3. PHILIPS MODEL -AT3

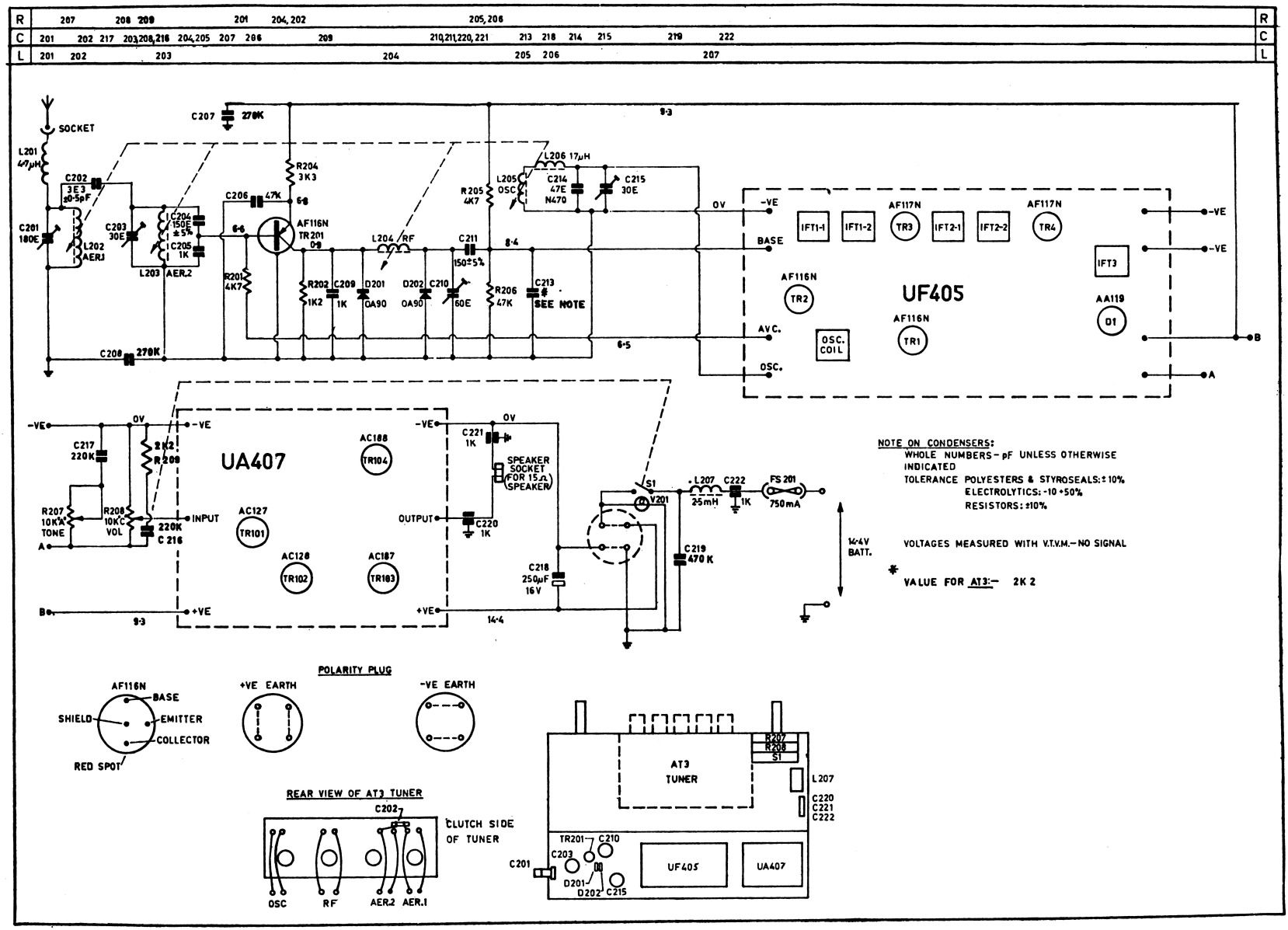

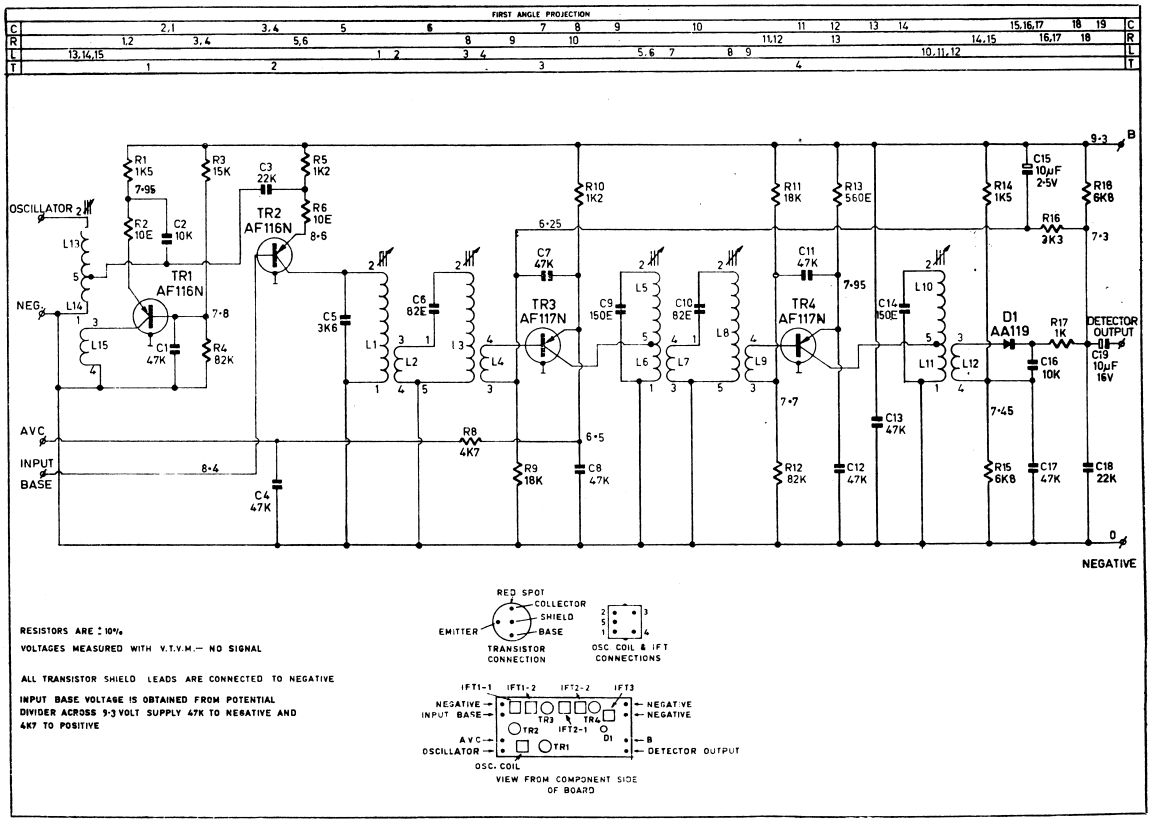

RESISTORS ARE ± 10%

VOLTAGES MEASURED WITH V.T.V.M.— NO SIGNAL

ALL TRANSISTOR SHIELD LEADS ARE CONNECTED TO NEGATIVE

INPUT BASE VOLTAGE IS OBTAINED FROM POTENTIAL DIVIDER ACROSS 9·3 VOLT SUPPLY 47K TO NEGATIVE AND 4K7 TO POSITIVE

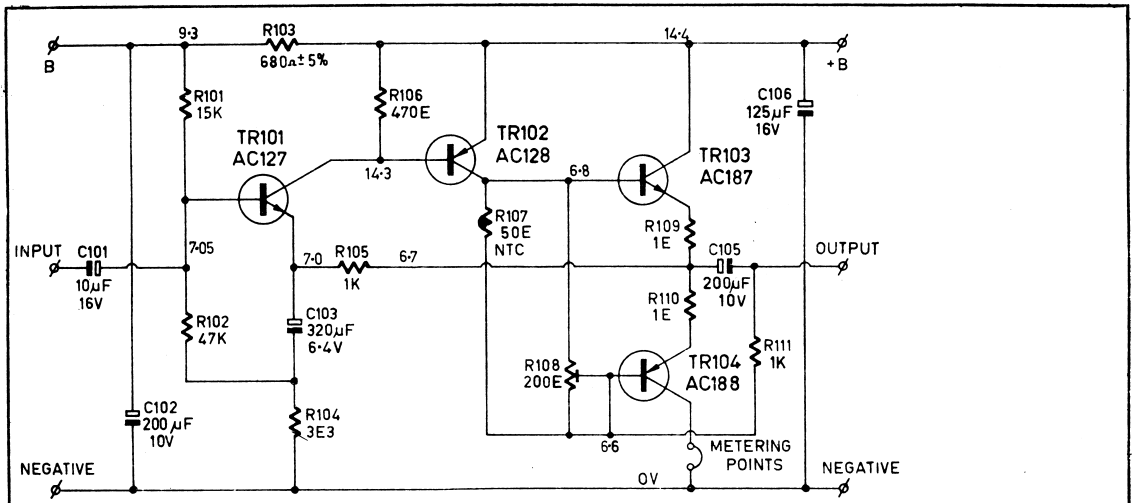

NOTE ON CONDENSERS:
WHOLE NUMBERS – pF UNLESS INDICATED OTHERWISE.
TOLERANCE POLYESTERS: ± 10%
TOLERANCE ELECTROLYTICS: – 10 + 50%

RESISTORS ARE ± 10% UNLESS INDICATED OTHERWISE.

VOLTAGES MEASURED WITH VTVM AND 1K5 ± 10% CONNECTED BETWEEN B AND NEGATIVE.

ZERO SIGNAL COLLECTOR CURRENT TR103/TR104 IS SET BY MEANS OF R108 TO 3·0mA AT 75°F.

COLLECTOR PNP: RED SPOT
COLLECTOR NPN: BLUE SPOT

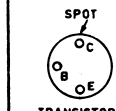

TRANSISTOR CONNECTIONS

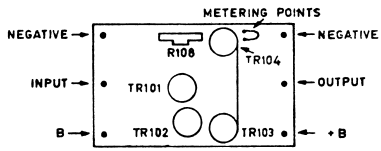

VIEW FROM COMPONENT SIDE OF BOARD