5. IF "MICRO-MODULE" PART (IFM-002)

IF "MICRO-MODULE" is used for the detection circuit of this model.

This composes a kind of rigid compound component for IF part, consisting of the parts described as under.

1) Amplifier transistor (TR4: 2SAI02/BA)
2) Resistor for TR4 (emitter)
3) Detector diode (IN-60M)
4) CR filter

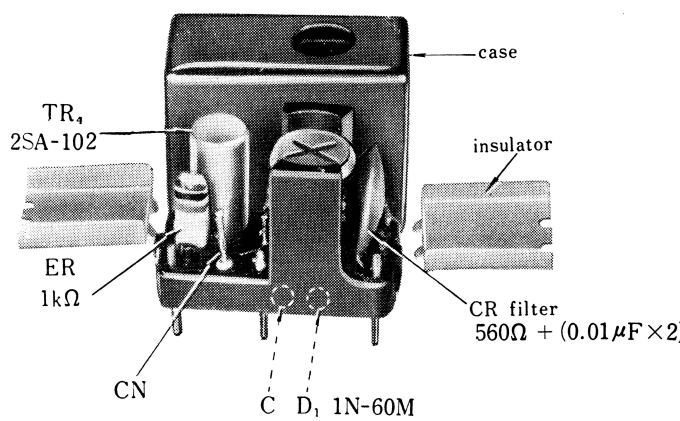

Fig. 5-1

IFM-002 CIRCUIT DIAGRAM

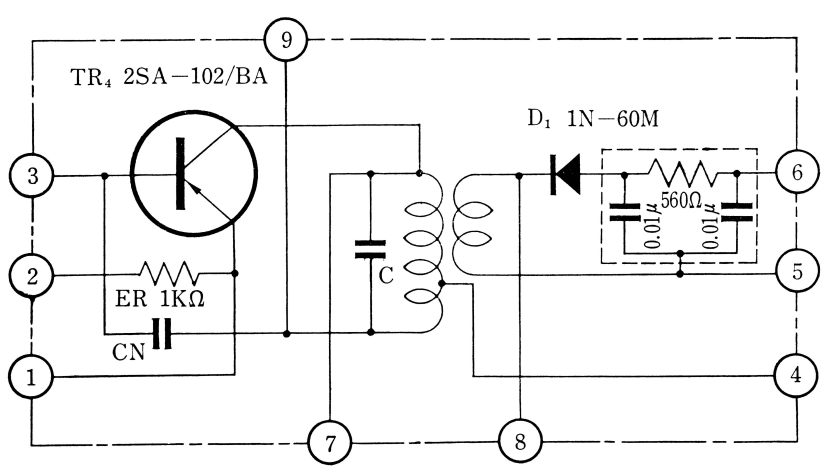

Fig. 5-2