10. HOW TO REPLACE THE DIAL PLATE

1) Take off the escutcheon and detach the 2 speed nuts fixing the dial plate on the right and left sides. Be aware of the nuts not to be broken.
2) Attach the dial plate from the rear of the escutcheon and fix the plate with the speed nuts, passing them with pinchers. (See Fig. 10-1)

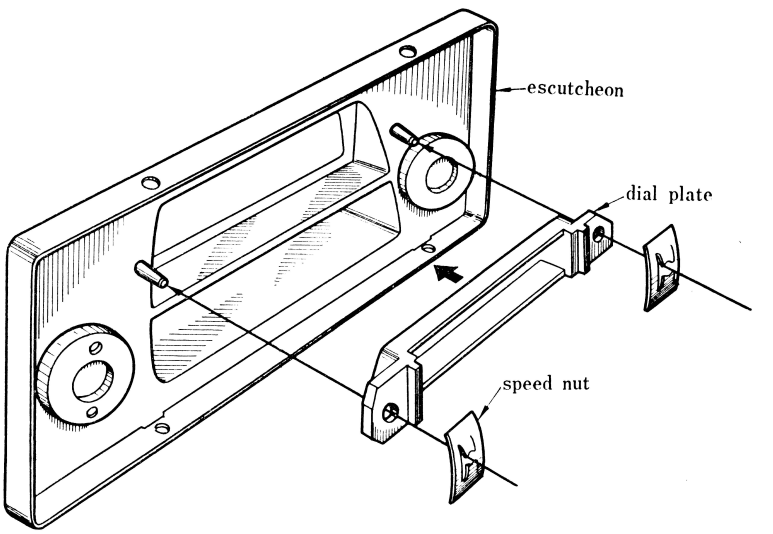

Fig. 10-1

11. HOW TO CHECK THE PRINTED CIRCUIT BOARD

In order to replace parts on the printed circuit board or check the voltages at various points on it, take off 2 screws which fix the bottom cover plate to the bottom case of the chassis and remove the plate, then the rear side of the printed circuit board can be very easily checked.

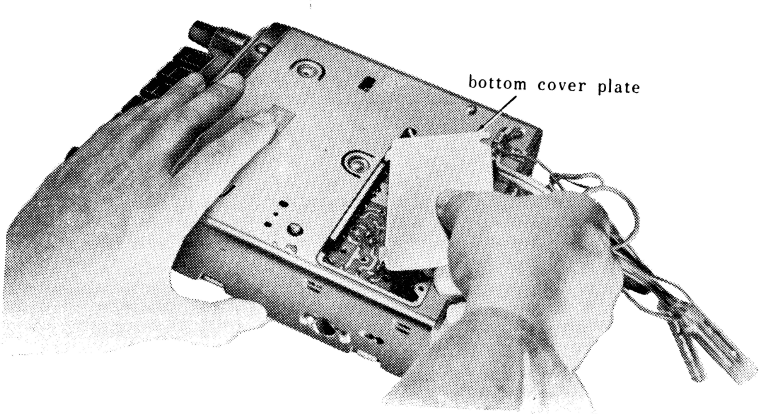

Fig. 11-1