6. POLARITY CHANGE

This model can be installed either in plus(+) earthed cars or in minus(−) earthed cars. The polarity change plug of power input circuit should be set to coincide with the polarity of the earth of a car.

1) In case of minus (−) earth
   Set the plug in such a way that the arrow head mark on the plug points ⊖ mark on the upper side of the set. (See Fig. 6-1)

2) In case of plus (+) earth
   Set the plug in such a way that the arrow head mark on the plug points ⊕ mark on the upper side of the set. (See Fig. 6-2)

* The radio set is originally minus (−) earthed in factory.

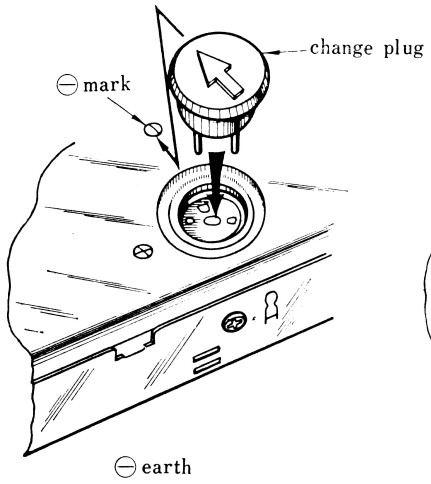

Fig. 6-1

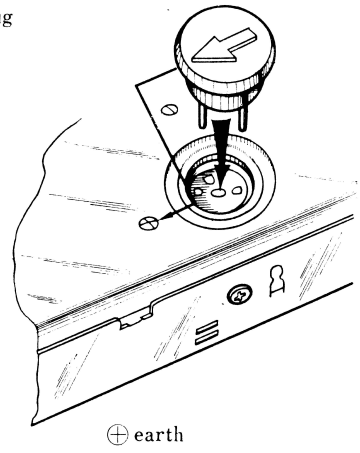

Fig. 6-2

7. POSITION OF ANTENNA JACK AND ANTENNA TRIMMER

7-1 Antenna Jack

1. This model (AT-361) has two antenna jacks, one is on the left side of the chassis and the other on the left side of the radiator in the back part of the set. (See Fig. 7-1)
2. These two antenna jacks are electrically connected as shown in the attached diagram of the printed circuit board.