AT-332-2

AUTO RADIO SERVICE MANUAL

AM/FM/FM STEREO AUTO RADIO
CUSTOM MADE FOR TOYOTA CROWN

TOYOTA PART NO. 86120-30230 (AT-332-2)

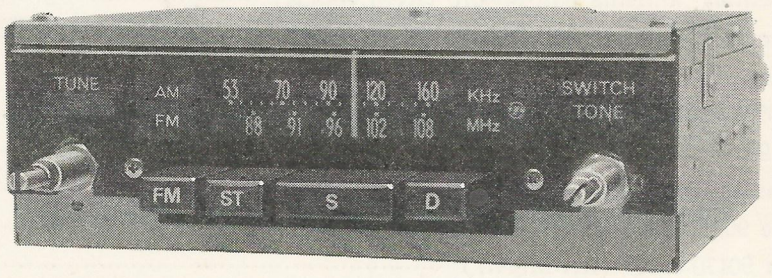

GENERAL

This model features;

* Specifically designed AM/FM/FM Stereo and signal seeking auto radio custom made for TOYOTA CROWN, used together with TOYOTA custom-made cassette stereo system.
* Built-in 2-channel main amplifier.
* Separately mounted line-filter unit to avoid car interference and easy plug-in connection with radio.
* Volume control interlocked with tape stereo control.
* Separate antenna lead-ins; front windshield antenna for AM, and rear window antenna for FM.
* Tape stereo player directly connected with a 20P connector.
* Remote control provided for power on-off, volume control and signal seeking.
* Antenna trimmer adjustable from front panel in combination with tape stereo player, shown as follows;

Auto Radio	Tape Player
86120-30230 (AT-332-2)	86260-30080 (SP-410-1) 4-track 2-channel cassette

Model numbers in parenthesis denote FUJITSU TEN's numbers.

NOTES: 1. 86120-30230 (AT-332-2) does not function without tape stereo player.
2. The above system operates with 4-speaker system.
3. Refer to service manual No. SM-146 for alignment procedure.

TOYOTA MOTOR SALES CO., LTD.

COMPOSITION

—Tuner assembly, radio 86120-30230 (AT-332-2)	1
—Speaker assembly, radio 86160-30090 (RN-ESP-12RA-28)	2
—Speaker assembly, radio 86160-30100 (SB-280)	2
—Filter, noise 90980-05017 (RN-EFL-228)	1
—Switch, radio remote control switch 84775-30010 (RN-EUC-3)	1
—Switch and volume assembly 86170-30020 (RN-EUC-7)	1
—Knob, tone control 86124-30030 (RN-MYD-111A)	2
—Knob, volume control 86125-30040 (RN-MYN-120)	2
—Bracket, radio tuner 86212-30010 (RN-MBL-303A)	1
—Bracket, radio tuner 86211-30010 (RN-MBL-304A)	1
—Wiring sub assembly, radio 86203-30160 (RN-EWJ-357)	1
—Wiring sub assembly, radio 86203-30170 (RN-EWJ-358)	1
—Knob, radio remote control switch 84776-30020 (RN-MYB-119)	1
—Cord sub assembly, antenna 86101-30060 (RN-EWF-35)	1
—Cord sub assembly, antenna 86101-30070 (RN-EWF-34)	1
—Cord sub assembly, antenna 86101-30030 (RN-EWF-25)	1
—Condenser 90980-04010 (RN-ECN-SR50F-45)	2
—Condenser 90980-04019 (RN-ECN-SR50F-44)	1
—Filter, noise 90980-05024 (RN-EFL-234)	1
—Wiring sub assembly, ignition coil 82031-22050 (RN-EWJ-342)	1
—Washer, plate 90201-09365 (RN-MWS-2)	2
—Nut, hexagon 90170-09167 (RN-MSN-7)	2
—Nut 90179-05153 (RN-MEN-19)	1
—Clamp 90463-06024 (RN-MCE-103)	2

NOTE: Model numbers in parenthesis denote FUJITSU TEN's numbers.

SPECIFICATIONS

TUNING RANGE	AM 525 to 1605 kHz	FM 88 to 108 MHz
INTERMEDIATE FREQUENCY	AM 455 kHz	FM 10.7 MHz
SENSITIVITY	AM 26 dB or better (at 0.5 watt output)	
	FM 18 dB or better (at S/N 30 dB)	
SENSITIVITY AT AUTOMATIC TUNING	AM Distant 25 ±7 dB	FM Distant 26 dB or better
	Local-Distant plus 26 ±8 dB	Local-Distant plus 20 ±5 dB
FREQUENCY DEVIATION AT AUTOMATIC TUNING	AM ±4 kHz or less	FM ±100 kHz or less
ELECTRICAL FIDELITY	AM −3 dB or better at 100 Hz	FM −3 dB or better at 100 Hz
	−15 dB or better at 4 kHz	−24 dB or better at 10 kHz
POWER OUTPUT	3.5 watts min. RMS (at T. H. D.=10%)	
SPEAKER IMPEDANCE	4 ohms per channel	
POWER INPUT	12-volt car battery, negative terminal to ground	
Voltage	13.2 VDC	
Current	Max. 1.6 amperes	
TRANSISTORS & IC's	15, plus 6 ICs and 24 diodes	
DIMENSIONS	165(W)×57(H)×162(D)mm (6½″, 2¼″, 6⅜″)	
WEIGHT	Radio tuner—1.5 kg (3.3 lbs.)	

NOTE: The above shows the specifications and performance for the combination with the custom-made stereo player.

BLOCK DIAGRAM

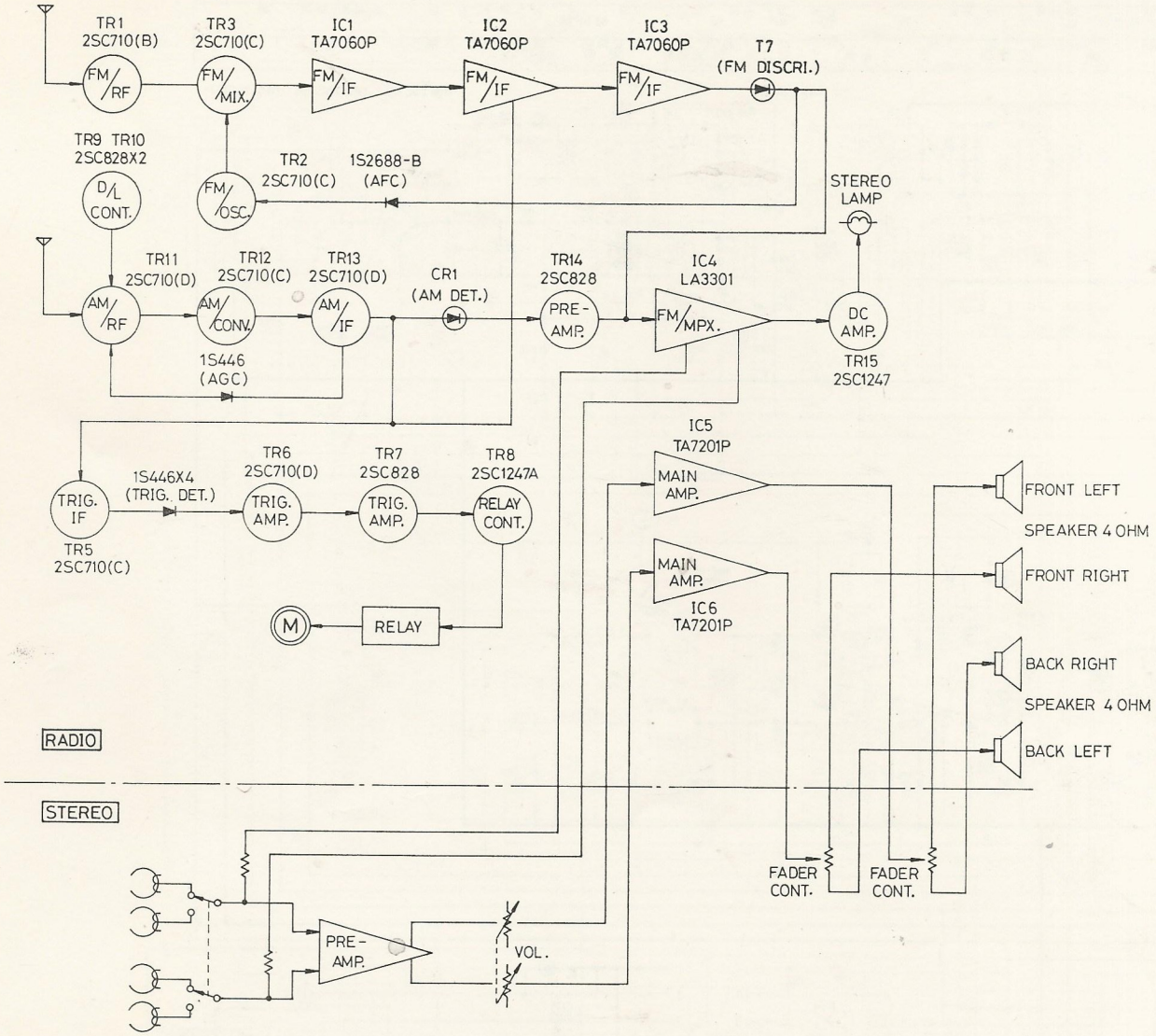

Fig. 1

NOTE: FIG. 1 SHOWS THE BLOCK DIAGRAM WHEN RADIO IS COMBINED WITH 86260-30080 (SP-410-1).

IC & TRANSISTOR BASING

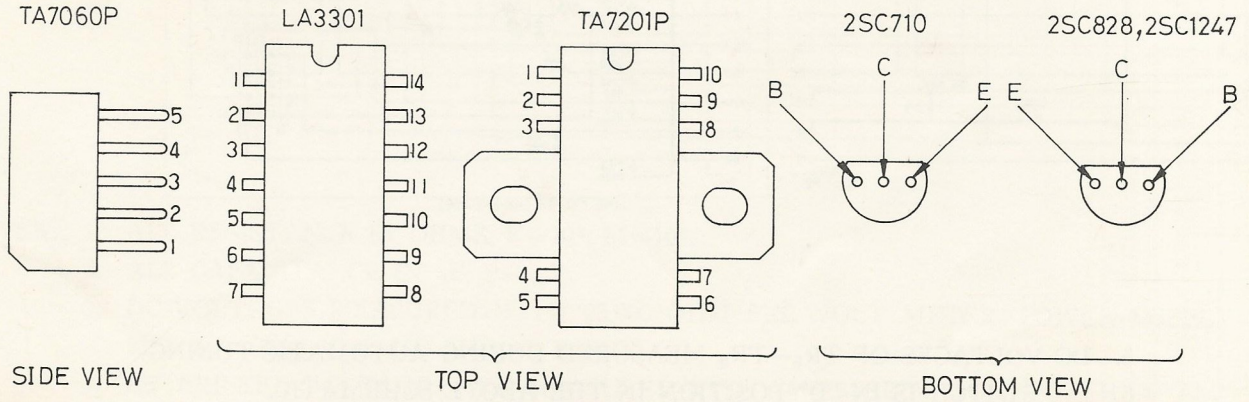

Fig. 2

PARTS LOCATION ON PC BOARD

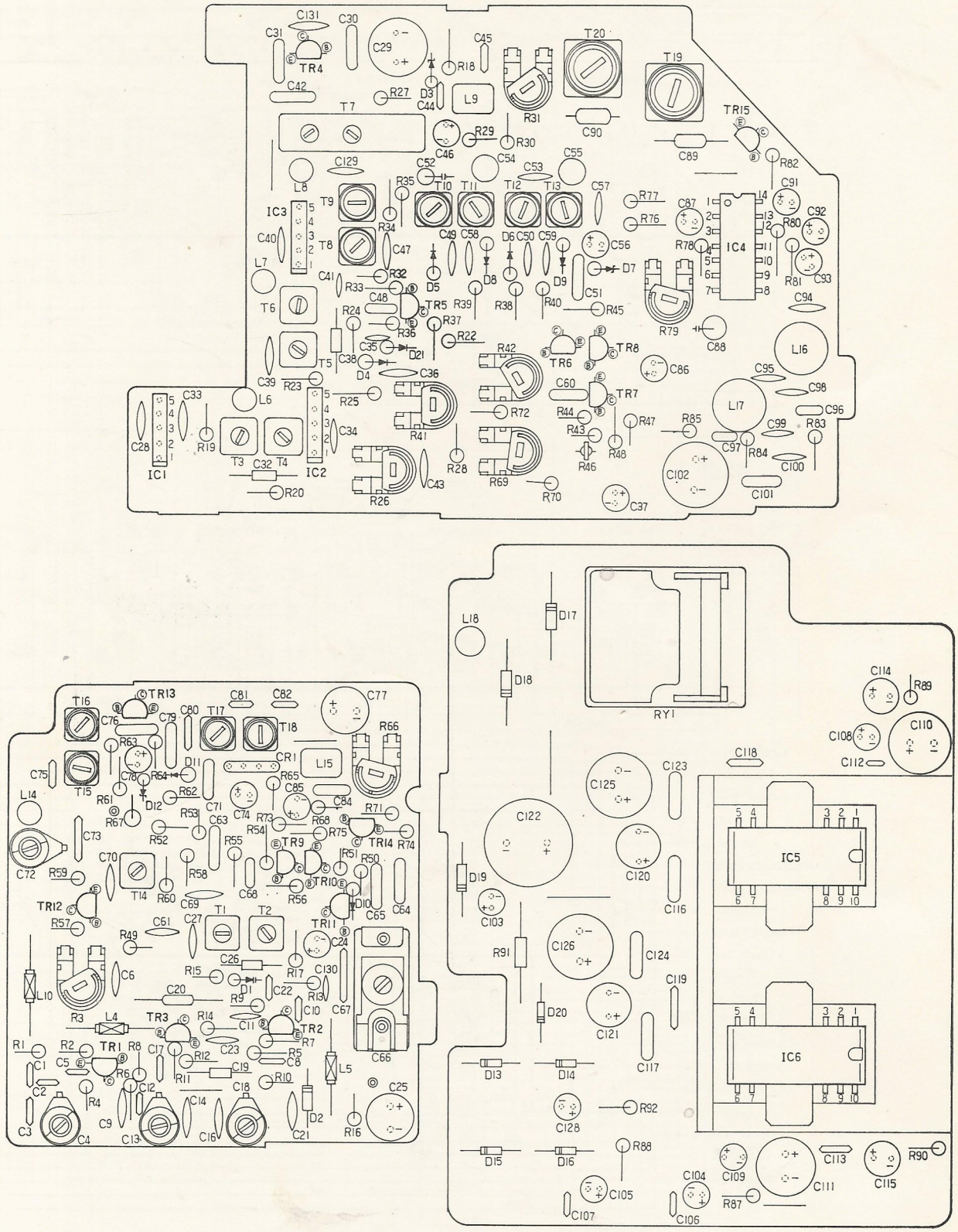

Fig. 3

NOTE: SEE FIG. 8 FOR PARTS LOCATION OF LINE FILTER UNIT (RN-EFL-228).

CHECK POINTS ON PC BOARD

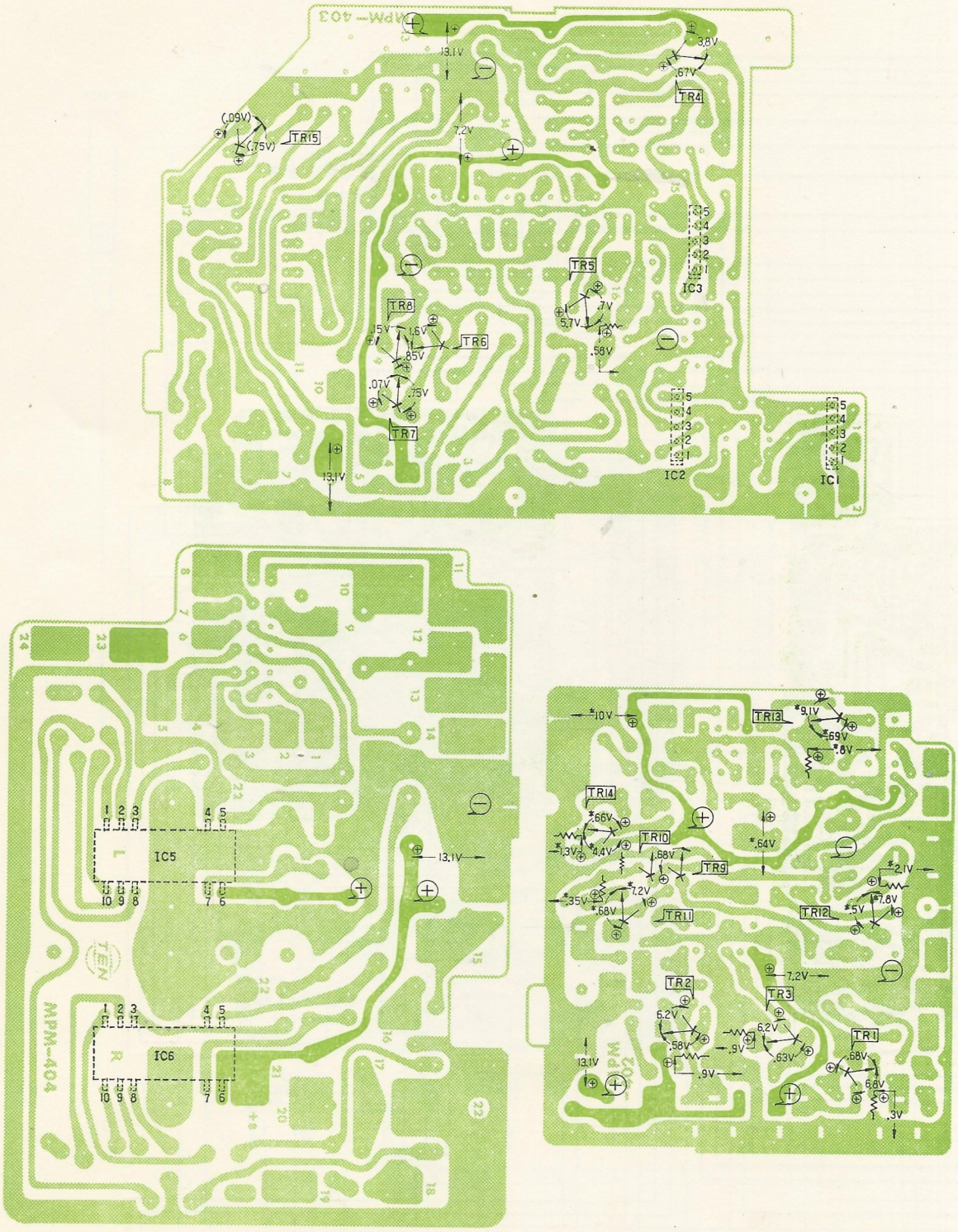

Fig. 6

NOTES:

1. ⊕ DENOTES POSITIVE POLARITY OF THE TESTER.
2. DC VOLTAGES MEASURED WITH 25,000 OHM PER VOLT METER, POWER SUPPLY SET AT +13.2 VDC, NO SIGNAL INPUT.
3. ASTERISKED VOLTAGES ARE MEASURED WITH AM-FM SELECTOR SWITCH IN "AM" POSITION, VOLTAGES IN PARENTHESIS AT FM STEREO AND ALL OTHER VOLTAGES IN "FM" POSITION.
4. DC VOLTAGES OF TR_5—TR_8 MEASURED DURING AUTOMATIC-TUNING.
5. IC PIN VOLTAGES MEASURED WITH RESPECT TO CHASSIS.

IC \ Pin No.	1	2	3	4	5	6	7	8	9	10	11	12	13	14
IC_1, IC_2, IC_3	1.48V	1.48V	—	9.3V	9.3V	—	—	—	—	—	—	—	—	—
IC_4	8.8V (8.8V)	0V (1.4V)	1.7V (1.7V)	.5V (.7V)	.4V (.4V)	.4V (.5V)	— (—)	1V (1V)	8.9V (8.3V)	3.1V (3.1V)	7.4V (6.8V)	7.4V (6.8V)	3.1V (3.1V)	0V (7.5V)
IC_5, IC_6	2.9V	3.4V	1.4V	—	6.8V	13.1V	12.2V	4V	8.2V	1.3V	—	—	—	—

WIRING ON PC BOARD (LINE FILTER RN-EFL-228)

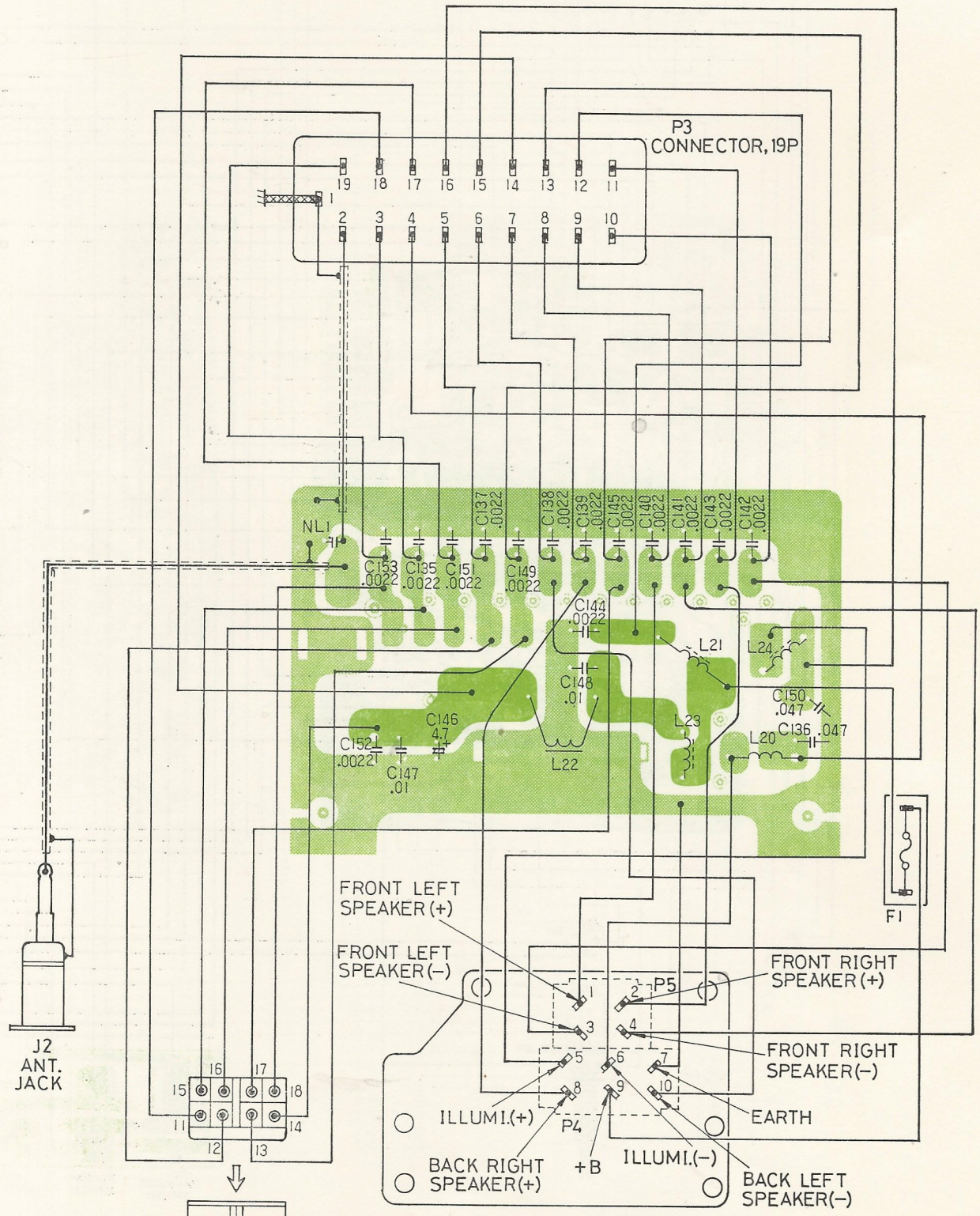

NOTE:
ALL CAPACITANCE IN μF.

Fig. 7

PARTS LOCATION ON PC BOARD (LINE FILTER RN-EFL-228)

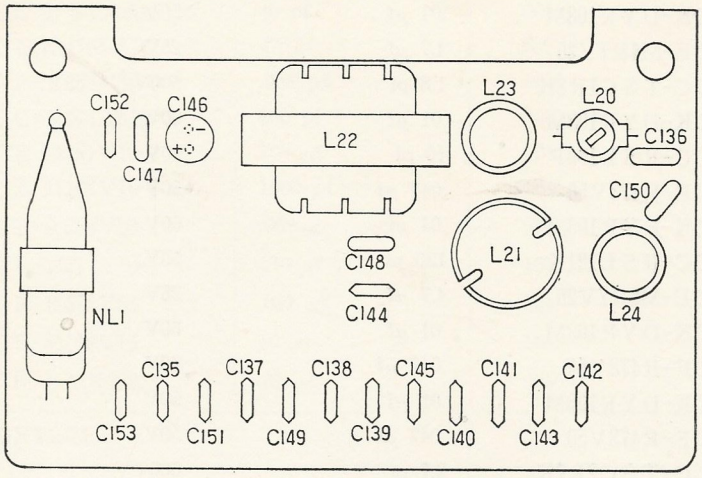

Fig. 8

REPLACEMENT PARTS LIST

Symbol No.	Stock No.	Description		
CAPACITORS				
C_1	RN-ECC-RSL200K	20 pf	50V	ceramic
C_2	RN-ECC-RSL100F	10 pf	50V	ceramic
C_3	RN-ECC-RSL400K	40 pf	50V	ceramic
C_4	RN-ECV-B20-18	20 pf		FM ant. trimmer
C_5	RN-ECC-RSL020C	2 pf	50V	ceramic
C_6	RN-ECK-DYR103M	.01 μf	50V	ceramic
C_8	RN-ECC-RSL080D	8 pf	50V	ceramic
C_9	RN-ECK-DYR103M	.01 μf	50V	ceramic
C_{10}	RN-ECC-RSL030C	3 pf	50V	ceramic
C_{11}	RN-ECK-DYR103M	.01 μf	50V	ceramic
C_{12}	RN-ECC-RSL100F	10 pf	50V	ceramic
C_{13}	RN-ECV-B20-18	20 pf		FM rf trimmer
C_{14}	RN-ECK-DYR103M	.01 μf	50V	ceramic
C_{16}	RN-ECK-DYR103M	.01 μf	50V	ceramic
C_{17}	RN-ECC-RSL050D	5 pf	50V	ceramic
C_{18}	RN-ECV-B10-17	10 pf		FM osc. trimmer
C_{19}	RN-ECC-TSC010K	1 pf	500V	ceramic
C_{20}	CQ08S-2E-300R0-K03	300 pf		styrol
C_{21}	RN-ECK-DYR103M	.01 μf	50V	ceramic
C_{22}	RN-ECC-RUJ080C	8 pf	50V	ceramic
C_{23}	RN-ECK-DYR103M	.01 μf	50V	ceramic
C_{24}	RN-ECE-MR47V50	.47 μf	50V	electrolytic
C_{25}	RN-ECE-M101V10-2	100 μf	10V	electrolytic
C_{26}	RN-ECC-TSC1R8K	1.8 pf	500V	ceramic
C_{27}, C_{28}	RN-ECK-DYR103M	.01 μf	50V	ceramic
C_{29}	RN-ECE-M221V10-2	220 μf	10V	electrolytic
C_{30}, C_{31}	RN-ECF-R473V50	.047 μf	50V	mylar
C_{32}	RN-ECC-TSC1R8K	1.8 pf	500V	ceramic
C_{33}, C_{34}	RN-ECK-DYR103M	.01 μf	50V	ceramic
C_{35}	RN-ECC-RSL060D	6 pf	50V	ceramic

Symbol No.	Stock No.	Description			
R_{47}	RN-ERC-CF331K	330 ohm	½W	10%	solid
R_{48}	RN-ERD-DC102J	1k ohm	⅛W	5%	carbon
R_{49}	RN-ERD-DC333J	33k ohm	⅛W	5%	carbon
R_{50}	RN-ERD-DC331J	330 ohm	⅛W	5%	carbon
R_{51}	RN-ERD-DC183J	18k ohm	⅛W	5%	carbon
R_{52}	RN-ERD-DC154J	150k ohm	⅛W	5%	carbon
R_{53}	RN-ERD-DC682J	6.8k ohm	⅛W	5%	carbon
R_{54}	RN-ERD-DC104J	100k ohm	⅛W	5%	carbon
R_{55}	RN-ERD-DC222J	2.2k ohm	⅛W	5%	carbon
R_{56}	RN-ERD-DC103J	10k ohm	⅛W	5%	carbon
R_{57}	RN-ERD-DC153J	15k ohm	⅛W	5%	carbon
R_{58}	RN-ERD-DC393J	39k ohm	⅛W	5%	carbon
R_{59}	RN-ERD-DC332J	3.3k ohm	⅛W	5%	carbon
R_{60}	RN-ERD-DC182J	1.8k ohm	⅛W	5%	carbon
R_{61}	RN-ERD-DC273J	27k ohm	⅛W	5%	carbon
R_{62}	RN-ERD-DC123J	12k ohm	⅛W	5%	carbon
R_{63}	RN-ERD-DC562J	5.6k ohm	⅛W	5%	carbon
R_{64}	RN-ERD-DC221J	220 ohm	⅛W	5%	carbon
R_{65}	RN-ERD-DC474J	470k ohm	⅛W	5%	carbon
R_{66}	RN-ERV-0N1-132	10k ohm			variable resistor
R_{67}	RN-ERC-CF271K	270 ohm	½W	10%	solid
R_{68}	RN-ERD-DC103J	10k ohm	⅛W	5%	carbon
R_{69}	RN-ERV-0N1-129	1k ohm			variable resistor
R_{70}	RN-ERD-DC222J	2.2k ohm	⅛W	5%	carbon
R_{71}	RN-ERD-DC753J	75k ohm	⅛W	5%	carbon
R_{72}	RN-ERD-DC103J	10k ohm	⅛W	5%	carbon
R_{73}	RN-ERD-DC244J	240k ohm	⅛W	5%	carbon
R_{74}	RN-ERD-DC102J	1k ohm	⅛W	5%	carbon
R_{75}	RN-ERD-DC332J	3.3k ohm	⅛W	5%	carbon
R_{76}	RN-ERD-DC273J	27k ohm	⅛W	5%	carbon
R_{77}	RN-ERD-DC103J	10k ohm	⅛W	5%	carbon
R_{78}	RN-ERD-DC271J	270 ohm	⅛W	5%	carbon
R_{79}	RN-ERV-0N1-129	1k ohm			variable resistor
R_{80}, R_{81}	RN-ERD-DC332J	3.3k ohm	⅛W	5%	carbon
R_{82}	RN-ERD-DC102J	1k ohm	⅛W	5%	carbon
R_{83}, R_{84}	RN-ERD-DC222J	2.2k ohm	⅛W	5%	carbon
R_{85}	RN-ERC-CF561K	560 ohm	½W	10%	solid
R_{86}, S_{13}	RN-ERV-2P2-127	Control, tone 10k ohm			variable resistor
R_{87}, R_{88}	RN-ERD-DC472J	4.7k ohm	⅛W	5%	carbon
R_{89}, R_{90}	RN-ERD-DC820J	82 ohm	⅛W	5%	carbon
R_{91}	RN-ERC-AF681K	680 ohm	½W	10%	solid
R_{92}	RN-ERD-DC822J	8.2k ohm	⅛W	5%	carbon
TRANSISTORS					
TR_1	RN-EVS-2SC710-B	FM-RF amp., silicon			
TR_2	RN-EVS-2SC710-C	FM-oscillator, silicon			
TR_3	RN-EVS-2SC710-C	FM-mixer, silicon			
TR_4	2SC1247A-VS	Regulator, silicon			
TR_5	RN-EVS-2SC710-C	Trigger IF amp., silicon			
TR_6	RN-EVS-2SC710-D	Trigger amp., silicon			
TR_7	RN-EVS-2SC828-R	Trigger amp., silicon			
TR_8	2SC1247A-VS	Relay control, silicon			
TR_9, TR_{10}	RN-EVS-2SC828-R	D/L control, silicon			

Symbol No.	Stock No.	Description
TR_{11}	RN-EVS-2SC710-D	AM-RF amp., silicon
TR_{12}	RN-EVS-2SC710-C	AM-converter, silicon
TR_{13}	RN-EVS-2SC710-D	AM-IF amp., silicon
TR_{14}	RN-EVS-2SC828-R	AM-IF amp., silicon
TR_{15}	2SC1247A-VS	DC amp., silicon
IC's		
IC_1—IC_3	RN-EIC-TA7060P	FM-IF amp., linear-monolithic
IC_4	RN-EIC-LA3301	Multi-control, linear-monolithic
IC_5, IC_6	RN-EIC-TA7201P	Main amp., linear-monolithic
DIODES		
D_1	RN-EDC-1S2688-B	AFC, variable capacitance
D_2	RN-EDT-MZ207-1	Regulator, zener
D_3	RN-EDT-MZ209	Regulator, zener
D_4	RN-EDG-1S446-D	Rectification (stereo gate), germanium
D_5, D_6	RN-EDG-1S446-D	Trigger detector, germanium
D_7	RN-EDT-MZ207-1	Regulator, zener
D_8, D_9	RN-EDG-1S446-D	Trigger detector, germanium
D_{10}	RN-EDS-SR1K2	Protector, TR_{11}, silicon
D_{11}	RN-EDG-1S446-D	AGC, germanium
D_{12}	RN-EDT-MZ209	Regulator, zener
D_{13}, D_{14}	RN-EDS-1S1555	Volume, silicon
D_{15}, D_{16}	RN-EDS-1S1555	Volume, silicon
D_{17}, D_{18}	RN-EDS-SR1K2	Spark suppression, silicon
D_{19}	RN-EDT-MZ207-1	Regulator, zener
D_{20}	RN-EDS-1S1555	Temperature compensator, silicon
D_{21}	RN-EDG-1S446-D	Voltage doubler, germanium
COILS		
L_1, L_2, L_3	RN-ETR-L-135	Coil unit, search tuner assembly (FM)
L_4, L_5	RN-ELH-BR74	Choke, 0.74 μH
L_6, L_7, L_8	RN-ELH-C6R2	Choke, 6.2 μH
L_9	RN-ELH-C6R2-1	Choke, 6.2 μH
L_{10}	RN-ELH-B6R2-1	Choke, 6.2 μH
L_{11}, L_{12}, L_{13}	RN-ETR-L-135	Coil unit, search tuner assembly (AM)
L_{14}	RN-ELH-C6R2	Coil, osc. series, 6.2 μH
L_{15}	RN-ELH-C102	Choke, 1 mH
L_{16}, L_{17}	RN-ELH-C403	Choke, 40 mH
L_{18}	RN-ELL-209	Choke, filter, 50 μH
TRANSFORMERS		
T_1—T_6	RN-ETF-136	Transformer, FM-IF, 10.7 MHz
T_7	RN-ETD-111	Discriminator, FM detector, 10.7 MHz
T_8	RN-ETF-131	Transformer, FM 1st trigger IF, 10.7 MHz
T_9	RN-ETA-131	Transformer, AM 1st trigger IF, 455 kHz
T_{10}	RN-ETF-132	Transformer, FM 2nd trigger IF, 10.7 MHz
T_{11}	RN-ETF-133	Transformer, FM 2nd trigger IF, 10.7 MHz
T_{12}	RN-ETA-132	Transformer, AM 2nd trigger IF, 455 kHz
T_{13}	RN-ETA-133	Transformer, AM 2nd trigger IF, 455 kHz
T_{14}	RN-ETH-206	Transformer, oscillator
T_{15}, T_{16}	RN-ETA-129	Transformer, AM-IF, 455 kHz
T_{17}, T_{18}	RN-ETA-130	Transformer, AM-IF, 455 kHz

Symbol No.	Stock No.	Description
T_{19}	RN-ETM-115	Transformer, multi-control, 38 kHz
T_{20}	RN-ETM-114	Transformer, multi-control, 19 kHz
CR PACKAGED ELECTRONIC COMPONENTS		
CR_1	RN-ECR-3	Module assembly, AM detector
MISCELLANEOUS ELECTRICAL		
RY_1	RN-EED-29	Relay, includes S_7—S_{12}
J_1	RN-EJL-119A	Receptacle, antenna
μ	RN-ETS-2N-111	Search tuner assembly, includes S_5, S_6, E_1, M_1 and coil unit
E_1	RN-ETR-R-6	Clutch
M_1	RN-ETR-M-8	Motor and gear assembly
P_1	RN-EJU-S20W-228	20P connector
P_2	RN-EJU-S19V-229	19P connector
	RN-EPM-12	Lamp assy.
PL_1, PL_2	RN-EPL-56	Lamp, FM and AM
	RN-MLC-94	Supporter, PL_1 and PL_2, rubber
PL_3	RN-EPL-57	Lamp, FM stereo
	RN-EPM-5	Lamp assy.
PL_4, PL_5	RN-EPL-33	Lamp, dial plate
	RN-EXL-103	Socket, PL_4 and PL_5
	RN-MLF-42	Shield, plastic, PL_4 and PL_5
S_1—S_4, S_{14}	RN-ESD-4B-141	Push switch, AM/FM changing
S_5, S_6	RN-ETR-K-8	Switch, motor reverse
	RN-EPP-362-AT-332-2	PC board assy., AM/FM front end circuit
	RN-EPP-359-AT-331-1	PC board assy., FM-IF, trigger and multi circuit
	RN-EPP-360-AT-331-1	PC board assy., audio circuit

Stock No.	Description	Q'ty.
MISCELLANEOUS MECHANICAL		
RN-MTD-169	Chassis, includes top cover	1
RN-MNM-286	Dialplate, calibrated	1
RN-MIM-42	Pointer, dialplate	1
RN-MBP-6	Backplate, dial	1
RN-MMT-9	Manual drive shaft, includes ant. trimmer C_{62}	1
RN-MIC-45	Indicator, FM stereo lamp	1
RN-MLC-93	Supporter, FM stereo lamp	1
RN-MSB-111	Shield plate, 19P connector	1
RN-MSB-113	Shield plate, RN-EPP-359-AT-331-1	1
RN-MPM-405	PC board, S_1—S_4 and S_{14}	1
RN-MHE-279	Supporter, PL_4 mounting	1
RN-MHE-280	Supporter, PL_5 mounting	1
RN-MHE-281	Supporter, 19P connector mounting	1
RN-MHE-282	Supporter, 20P connector mounting	1
RN-MHE-297	Supporter, RN-MLC-93	1
RN-MHE-298	Supporter, dial cord stringing	1
RN-MHE-299	Supporter, S_1—S_4 and S_{14}	1
RN-MRE-78	Radiator, IC_5 and IC_6	1
RN-MSN-1	Nut, 9mm, tone and tuning shaft	2
RN-MWS-2	Washer, 9mm, tone and tuning shaft	2
F6-SBD-4×6S	Screw, 4×6mm, RN-MHE-282 mounting	1
F6-SBD-3×8S	Screw, 3×8mm, 19P connector mounting	2

Stock No.	Description	Q'ty.
F6-SBD-2.6×6S	Screw, 2.6×6mm	4
F6-SNA-2.6×6S	Screw, 2.6×6mm, 20P connector mounting	2
F6-SBD-3×4S	Screw, 3×4mm	4
F6-SBD-3×6S	Screw, 3×6mm	36
F6-SNA-2.6×4BS	Screw, 2.6×4mm, RY_1 mounting	2
F6-SNA-3×10BS	Screw, 3×10mm, radiator mounting	4
F6-WB-3S	Washer, 3mm, spring, radiator mounting	4
F6-N1-3S	Nut, 3mm, radiator mounting	4
SPEAKER UNIT (SB-280) 86160-30100		
RN-ESP-18EA-40	Speaker, 12×18cm, 4 ohms 5W	1
RN-MHW-1	Net, black, speaker	1

Symbol No.	Stock No.	Description			Q'ty.
LINE FILTER (RN-EFL-228) 90980-05017					
C_{135}	RN-ECK-RYW222M	.0022 μf	50V	ceramic condenser	1
C_{136}	RN-ECF-R473V50	.047 μf	50V	mylar condenser	1
C_{137}—C_{145}	RN-ECK-RYW222M	.0022 μf	50V	ceramic condenser	9
C_{146}	RN-ECE-M4R7V25	4.7 μf	25V	electrolytic condenser	1
C_{147}, C_{148}	RN-ECF-R103V50	.01 μf	50V	mylar condenser	2
C_{149}	RN-ECK-RYW222M	.0022 μf	50V	ceramic condenser	1
C_{150}	RN-ECF-R473V50	.047 μf	50V	mylar condenser	1
C_{151}—C_{153}	RN-ECK-RYW222M	.0022 μf	50V	ceramic condenser	3
L_{20}	RN-ETW-123	Coil, 0.6 μH			1
L_{21}	RN-ELL-315	Choke, filter, 100 μH			1
L_{22}	RN-ELL-205	Choke, filter, 2.7 mH			1
L_{23}, L_{24}	RN-ELL-209	Choke, filter, 50 μH			2
NL_1	RN-EPN-52	Neon lamp			1
J_2	RN-EJA-105	Receptacle, antenna			1
P_3	RN-EJU-S19W-230	19P connector			1
P_4, P_5	RN-EJU-S10V-232	6P and 4P connector			1
P_6	RN-EWJ-354	8P connector and lead assy., remote control			1
F_1	RN-EFG-B05-1	Fuse, 5 amperes			1
	RN-EFH-104	Fuseholder, socket			1
	RN-EFH-105	Cover, fuseholder, white			1
	RN-EPP-346-EFL-228	PC board assy., line filter			1
	RN-MCC-47	Supporter, NL_1			1
	RN-MHC-90	Case, line filter			1
	RN-MHE-278	Supporter, P_3 mounting			1
	RN-MHU-97	Supporter, P_3 mounting			1
	RN-MSP-95	Spring, earth			1
	RN-MHL-133	Supporter, PC board mounting			1
	RN-MCO-38	Clamp, P_6			1
	F6-SBD-2.6×6S	Screw, 2.6×6mm			1
	F6-SBD-3×8S	Screw, 3×8mm			2
	F6-SBD-3×12S	Screw, 3×12mm			2
	F6-SBD-3×4S	Screw, 3×4mm			4
	F6-SBD-3×6S	Screw, 3×6mm			11

Stock No.	Description
CONTROL UNIT (RN-EUC-3) 84775-30010	
RN-ESB-1A2-128	Push switch, on-off
RN-EJZ-106	Connector assy.
RN-EZE-FA-9	Terminal
CONTROL UNIT (RN-EUC-7) 86170-30020	
RN-ERV-1P1-38	Variable resistor 10k ohm, volume
RN-MYN-123	Knob, volume control
RN-MCF-9	Clamp
RN-EWJ-370	Connector and lead assy.
LINE FILTER (RN-EFL-234) 90980-05024	
RN-ECL-RR47V50	Lacquer film condenser, 0.47 μf 50V
RN-ELH-C3R7-1	Choke, 3.7 μH
RN-EWJ-379	Terminal and lead assy., 80mm
RN-EWJ-380	Terminal and lead assy., 85mm
RN-EWJ-381	Terminal and lead assy., 80mm
RN-MPM-425	PC board

NOTE: Specifications subject to change without prior notice

TEN

Manufactured for TOYOTA by

FUJITSU TEN LIMITED

Printed in Japan
502DE1.1

SCHEMATIC

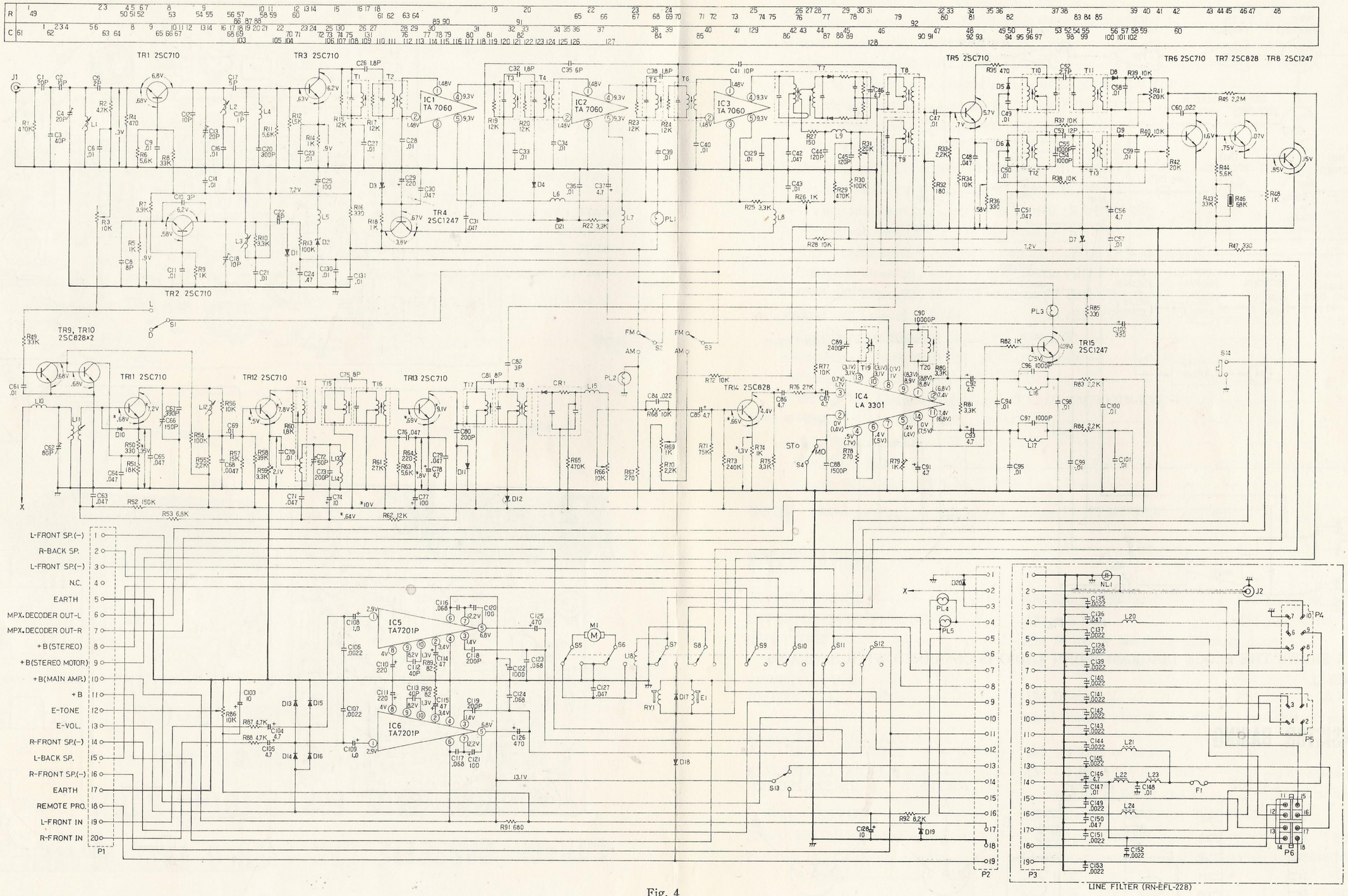

Fig. 4

NOTES:

1. ALL RESISTANCE IN OHMS, K=10^3, M=10^6.
2. ALL CAPACITANCE IN μF, P=$\mu\mu$F.
3. DC VOLTAGES MEASURED WITH 25,000 OHM PER VOLT METER, POWER SUPPLY SET AT +13.2 VDC, NO SIGNAL INPUT.
4. ASTERISKED VOLTAGES ARE MEASURED WITH AM-FM SELECTOR SWITCH IN "AM" POSITION, VOLTAGES IN PARENTHESIS AT FM STEREO AND ALL OTHER VOLTAGES IN "FM" POSITION.
5. DC VOLTAGES OF TR_5—TR_8 MEASURED DURING AUTOMATIC-TUNING.
6. D-L SWITCH IS IN "D" POSITION IN THE ABOVE SCHEMATIC.
7. THE ABOVE RELAY POSITION IS IN BROADCAST RECEPTION (NO AUTO-SEARCH OPERATION).

WIRING ON PC BOARD

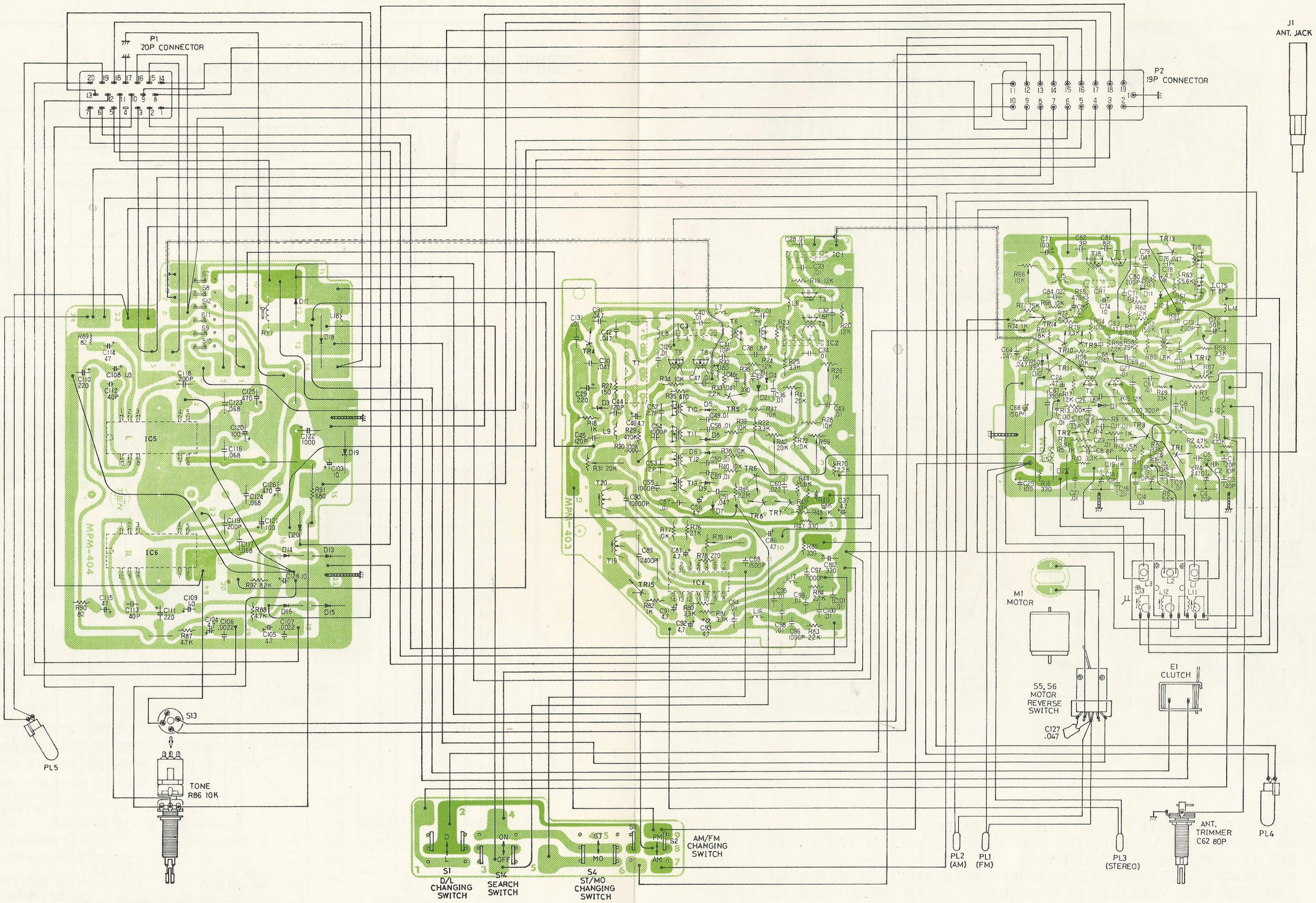

Fig. 5

NOTES: 1. ALL RESISTANCE IN OHMS, K=10^3, M=10^6.

2. ALL CAPACITANCE IN μF, P=$\mu\mu$F.

3. SEE FIG. 7 FOR WIRING ON PC BOARD OF LINE FILTER UNIT (RN-EFL-228).