SCHEMATIC DIAGRAM

TR-1	D-1	D-2	TR-2	TR-3	D-3	TR-4	TR-5	TR-6 & TR-7
MC103	OA70	OA70	OC44	OC44	OA70	OC71	OC71	2OC72
CONV.	OSC. COMP.	D.A.G.C.	1ST IF AMP	2ND IF AMP.	DET. & A.G.C.	1ST AF AMP.	2ND AF AMP.	OUTPUT

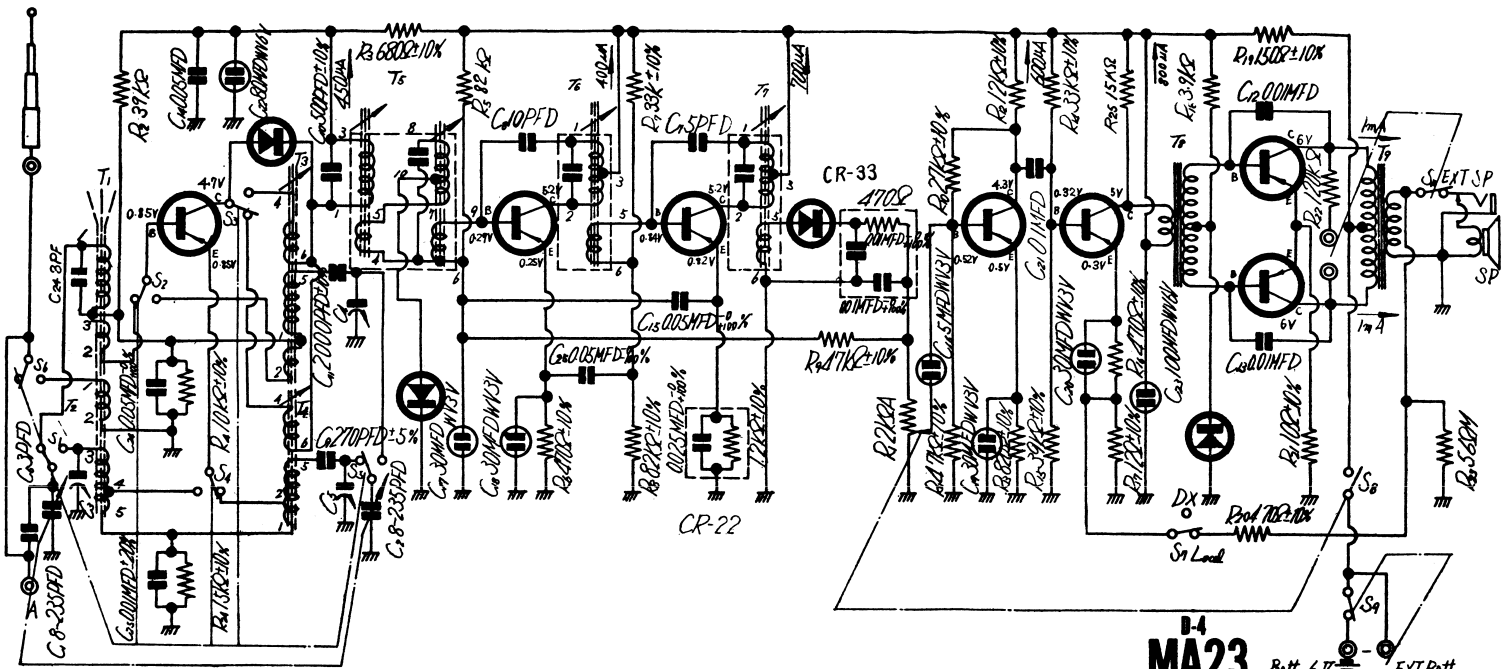

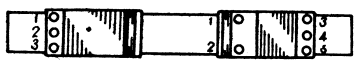

T1 T2

FERRITE ROD ANT COIL

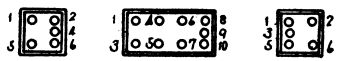

T3 & T4

OSC COIL

T5

IF TRANS

(BOTTOM VIEW)

T6 & T7

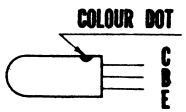

TRANSISTOR

SPECIFICATIONS

Frequency Range :	MW 540~1600Kc/s (556~187.5m) S W 3.9~10Mc/s (77 ~ 30m)
Intermediate Frequency :	455 Kc/s
Sensitivity :	MW 250μV/m/10mW S W 300μV/m/10mW
Power Output :	150mW, undistorted 200mW, maximum
Power Supply :	6V (Four No. 3 penlight cells 1.5V) (NATIONAL UM-3 or equivalents)
Speaker :	2½" PM dynamic speaker Voice coil impedance, 10Ω

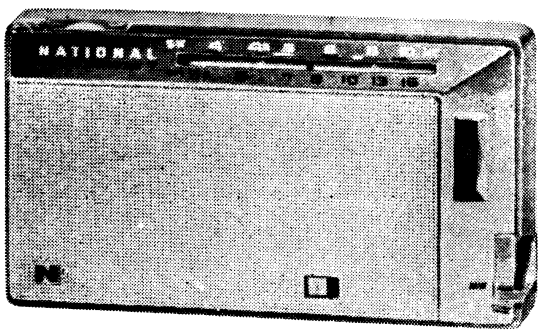

NATIONAL MODEL AT-290

ALIGNMENT PROCEDURE

OUTPUT METER ..... Connect Output Meter across speaker voice coil.
OUTPUT LEVEL ..... Attenuate Test Oscillator output always to maintain 0.5 volt on Output Meter to prevent overloading of the receiver.
TEST OSCILLATOR ..... Modulate Test Oscillator at 1000 c/s and connect the lead wires of Test Oscillator output to Radiation Loop Coil.
RADIO RECEIVER ..... Place the radio receiver 20cm away from Radiation Loop Coil. Set volume control to maximum and DX-LOCAL switch to "DX".
RADIATION LOOP COIL ..... Make up a 20 turn, 15 cm diameter bobbin, using 1mm copper wire.

Step	Band Switch position	Test OSC output	Dial setting	Adjusting to maximum output
1	MW	455 KC	Variable capacitor at maximum capacity	IF transformers (T_5, T_6, T_7)
2		455 KC		Repeat step ①.
3		535 KC	Variable capacitor at minimum capacity	MW OSC coil (T_4)
4		1630 KC		MW OSC trimmer (C_5)
5		535 KC or 1650 KC	Variable capacitor at max. or min. capacity	Repeat steps ③ and ④.
6		600 KC	600 KC	MW ANT coil (T_1)
7		1500 KC	1500 KC	Capacity of (C_{24})
8		600 KC or 1500 KC	600 KC or 1500 KC	Repeat steps ⑥ and ⑦.
9	SW	3.8 MC	Variable capacitor at maximum capacity	SW OSC coil (T_3)
10		10.4 MC	Variable capacitor at minimum capacity	SW OSC trimmer (C_4)
10		4 MC	4 MC	SW ANT coil (T_2)
11		10 MC	10 MC	SW ANT trimmer (C_3)
12		4 MC or 10 MC	4 MC or 10 MC	Repeat steps ⑩ and ⑪.

DIAL CORD DRIVE MECHANISM & FREQUENCY ALIGNMENT

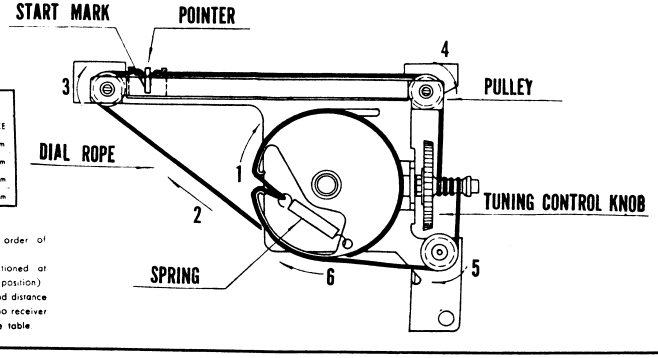

FREQUENCY AND DISTANCE ON THE DIAL SCALE		
	FREQUENCY	DISTANCE
MW	600 KC	15mm
	1500 KC	62mm
SW	4MC	7.1mm
	10MC	64mm

Notes:
- Arrow marks indicate the order of hanging the dial rope.
- Tuning capacitor is positioned at maximum capacity (closed position).
- Frequency to be aligned and distance on the dial scale of the radio receiver are indicated in the above table.

Connection of Test Oscillator, Radiation Loop Coil, Radio Receiver and Output Meter.

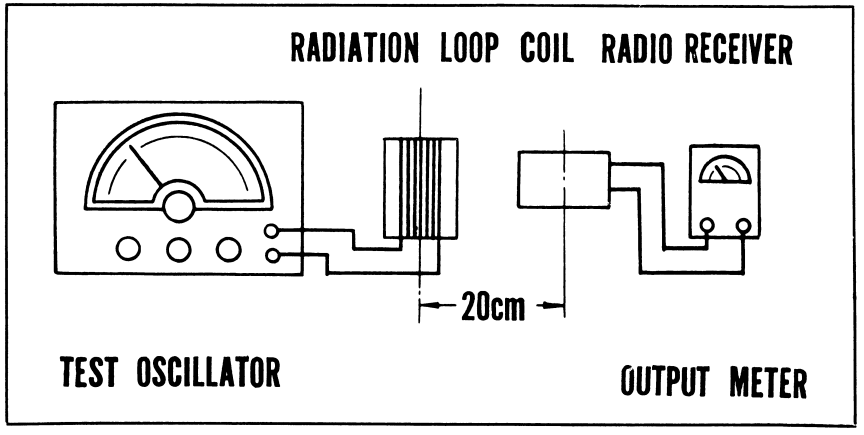

MAIN PARTS LIST

Symbol	Parts No. or Name		Description
Resistors:			
R_1	SNVa-16	2KΩ A	Volume control
R_2	RC ¼ BF	39KΩ M	Fixed, composition ¼W ±20%
R_3	RC ¼ BF	680Ω K	Fixed, composition ¼W ±10%
R_4	RC ¼ BF	10KΩ K	Fixed, composition ¼W ±10%
R_5	RC ¼ BF	82KΩ M	Fixed, composition ¼W ±20%
R_6, R_{16}, R_{20}	RC ¼ BF	470Ω K	Fixed, composition ¼W ±10%
R_7, R_{14}	RC ¼ BF	33KΩ K	Fixed, composition ¼W ±10%
R_8	RC ¼ BF	8.2KΩ K	Fixed, composition ¼W ±10%
R_9, R_{11}	RC ¼ BF	4.7KΩ K	Fixed, composition ¼W ±10%
R_{10}	RC ¼ BF	27KΩ K	Fixed, composition ¼W ±10%
R_{12}	RC ¼ BF	1.2KΩ K	Fixed, composition ¼W ±10%
R_{13}	RC ¼ BF	820Ω K	Fixed, composition ¼W ±10%
R_{15}	RC ¼ BF	3.9KΩ K	Fixed, composition ¼W ±10%
R_{17}	RC ¼ BF	12Ω K	Fixed, composition ¼W ±10%
R_{18}	RC ¼ BF	3.9KΩ M	Fixed, composition ¼W ±20%
R_{19}	RC ¼ BF	150Ω K	Fixed, composition ¼W ±10%
R_{21}	RC ¼ BF	10Ω K	Fixed, composition ¼W ±10%
R_{22}	RC ¼ BF	120KΩ M	Fixed, composition ¼W ±20%
R_{23}	RC ¼ BF	56Ω M	Fixed, composition ¼W ±20%
R_{24}	RC ¼ BF	1.5KΩ K	Fixed, composition ¼W ±10%
R_{25}	RC ¼ BF	15KΩ M	Fixed, composition ¼W ±20%
Capacitors:			
C_1+C_2	2YC-23B-12		2-gang variable capacitor
C_3~C_5	#2213B		Trimmer
C_6, C_{24}	3PF		Fixed, ceramic ±0.5PF
C_7	5PF		Fixed, ceramic ±10%
C_8	10PF		Fixed, ceramic ±10%
C_9	270PF		Fixed, ceramic ±5%
C_{10}	500PF		Fixed, polystyrene ±10%
C_{11}	2000PF		Fixed, polystyrene ±10%
C_{12}, C_{13}	MGAX-07103		Fixed, plastic 0.01MFD
C_{14}	MGAX-07503		Fixed, plastic 0.05MFD
C_{15}, C_{25}	S-0.05μFPC		Fixed, ceramic 0.05MFD
C_{24}	D-0.01μFPC		Fixed, ceramic 0.01MFD ±20%
C_{16}	NPA-3V5		Fixed, electrolytic 5 MFD WV 3V
C_{17}, C_{18}, C_{19}, C_{20}	NPA-3V30		Fixed, electrolytic 30 MFD WV 3V
C_{22}	NPA-6V80		Fixed, electrolytic 80 MFD WV 6V
C_{23}	NCT-6V100		Fixed, electrolytic 100 MFD WV 6V
CR-33	CR-33		Coupled capacitors and resistor 0.01MFD+0.01MFD+470Ω
CR-22	CR-22		Coupled capacitor and resistor 0.025MFD+1.2KΩ

Notes :

1. Measurements of voltages and current should be at minimum volume and at no input signal.
2. Voltages indicated in the schematic diagram are given as standard values measured by Vacuum-tube Volt Meter. When 1 KΩ/1 V Tester is used for voltage measurement, please note that you will get lower values (-0.1V on Collector, -0.2V on Base and -0.1V on Emitter respectively) than the above-mentioned standard values obtained by Vacuum-tube Volt Meter.
3. Please make your current measurements within the range of 1 mA. Collector current of the transistor TR-2 (I_{C2}) is to be measured at the points, as illustrated on the printed circuit board removing solder on them.
   Those of other transistors can be measured by cutting the printed circuit on the board.
4. Values of resistor R_2 (39 KΩ), R_5 (82 KΩ), and R_{18} (3.9 KΩ) given in the diagram may be variable according to radio receiver.

MAIN PARTS LOCATION & PRINTED CIRCUIT BOARD

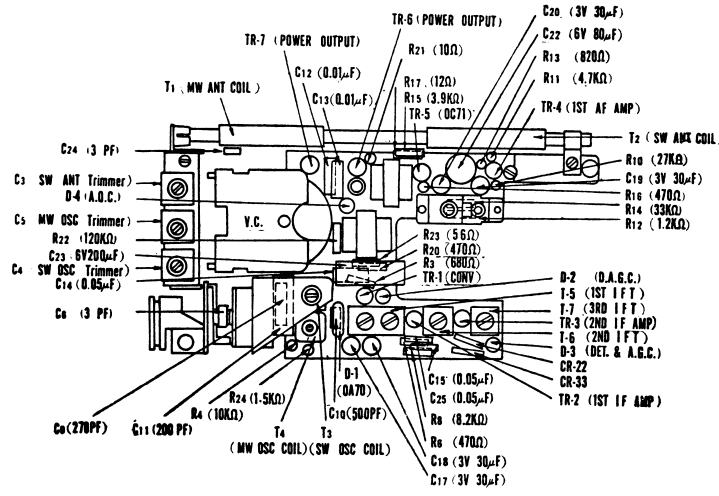

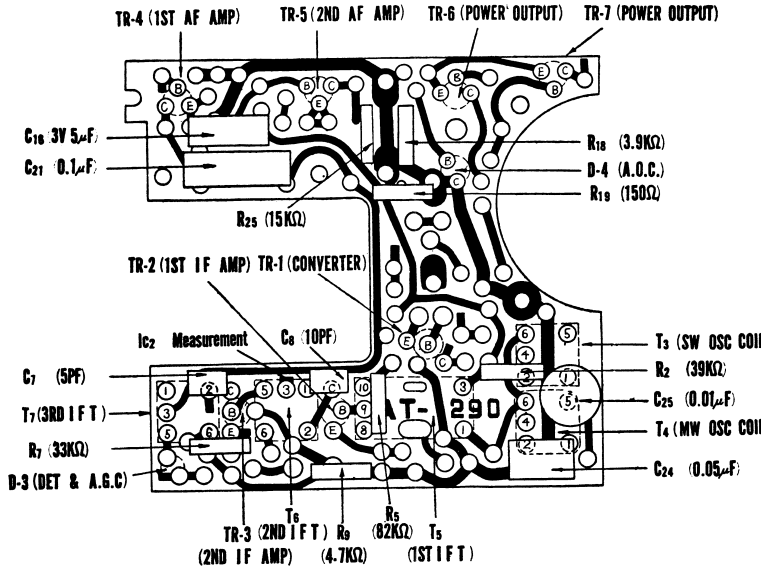

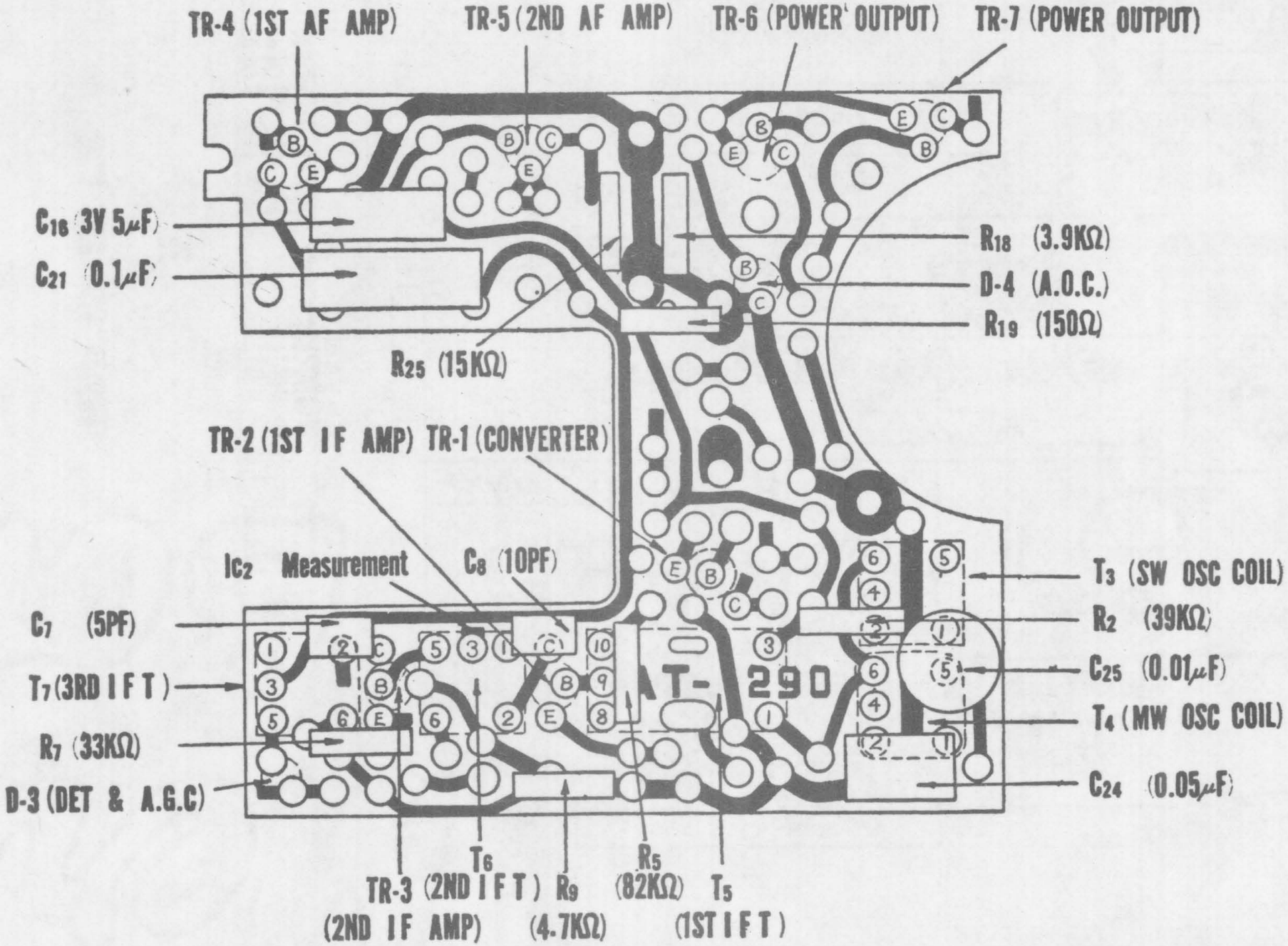
TR-4 (1ST AF AMP)
TR-5 (2ND AF AMP)
TR-6 (POWER OUTPUT)
TR-7 (POWER OUTPUT)
C16 (3V 5μF)
C21 (0.1μF)
R18 (3.9KΩ)
D-4 (A.O.C.)
R19 (150Ω)
R25 (15KΩ)
TR-2 (1ST IF AMP)
TR-1 (CONVERTER)
Ic2 Measurement
C8 (10PF)
T3 (SW OSC COIL)
R2 (39KΩ)
C25 (0.01μF)
T4 (MW OSC COIL)
C24 (0.05μF)
C7 (5PF)
T7 (3RD IFT)
R7 (33KΩ)
D-3 (DET & A.G.C)
AT-290
T6
TR-3 (2ND IFT)
(2ND IF AMP)
R9 (4.7KΩ)
R5 (82KΩ)
T5 (1ST IFT)