Clarion Co., Ltd. Export Division- 22-3, Shibuya 2-chome, Shibuyaku, Tokyo, 150 Japan Tel: 03-3400-1121 Fax: 03-3400-8679 Telex: J22908, J22152
Service Dept.- 50 kamitoda,Toda-shi,Saitama,335 Japan Tel: 048-443-1111 Fax: 048-445-3810

clarion Service Manual

Published by Service Dept.

AM/FM Stereo Cassette with DSP/EQ/CD Changer Controller

Model ***ARX9270***
(PE-9901K)

ORIGINAL SERVICE MANUAL

This additional service manual is designed to be used together with Model ARX9170.

ORIGINAL MODEL	MANUAL NO.
ARX9170	298-5212-00

SPECIFICATIONS

FM tuner section

Frequency range:	87.5MHz to 108.0MHz
Usable sensitivity:	9dBf
50dB quieting sensitivity:	15dBf
Stereo separation:	35dB(at 1kHz,60dBf)
Frequency response:	30Hz to 15kHz(±3dB)

AM tuner section

Frequency range:	531kHz to 1,602kHz
Usable sensitivity:	20 μV

Tape section

Wow and flutter:	0.06%(WRMS)
Stereo separation:	45dB(at 1kHz)
Signal-to-noise ratio:	70 μs(CrO2,FeCr,Metal) 58dB
	Dolby B 67dB
	Dolby C 74dB
Frequency response(±3dB):	120 μs(Normal) 30Hz to 20kHz
	70 μs(CrO2,FeCr,Metal) 30Hz to 20kHz

General

Line output:	1000mV(at 1kHz,10kΩ)
Bass control action:	±15dB(at 30Hz)
Treble control action:	±10dB(at 10kHz)
Power supply voltage:	14.4V(10.8V to 15.6V allowable), negative ground
Current consumption:	Less then 3A
Load ilmpedance:	10kΩ
Dimension/mm:	178(W)×50(H)×152(D)
Weight:	1.6kg

※ Dolby noise reduction manufactured under license from Dolby Laboratories Licensing Corporation.
※ "DOLBY"and the double-D symbol ▯▯ are trademarks of Dolby Laboratories Licensing Corporation.
※ Specification and design are subject to change without notice for further improvement.

COMPONENTS

PE-9901K-B

Main unit	————	1
Remote-controller	RCB-058-600	1
Battery(CR2025BC)	————	1
Mounting bracket(univ)	300-9035-01	1
DCP case	335-4848-03	1
Outer escutcheon	940-7715-02	1
Extension lead	854-3842-00	1
Parts bag	————	
Hook plate	330-8216-01	2
Lead holder	335-0833-01	1

■ DIFFERENCE FROM ORIGINAL MODEL

1. LED ILLUMINATION
2. Some of the escutcheon parts.

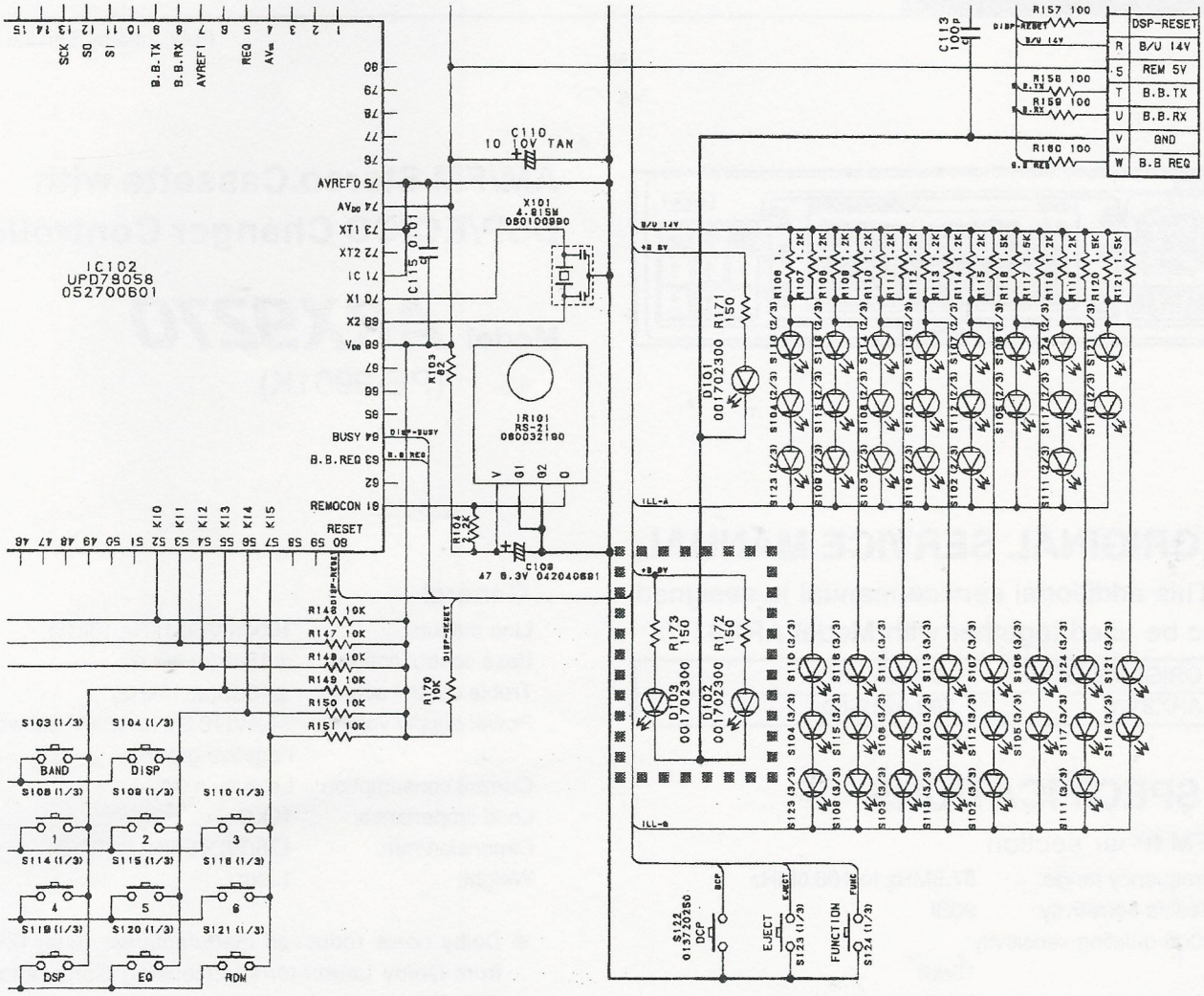

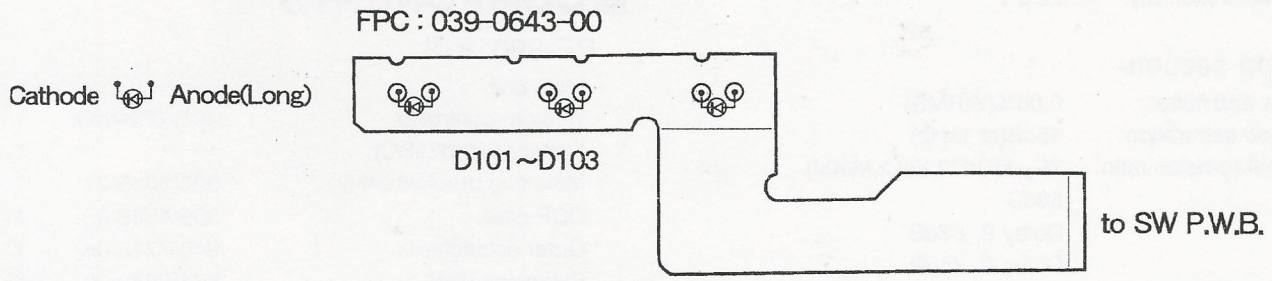

■ EXPLODED VIEW/PARTS LIST

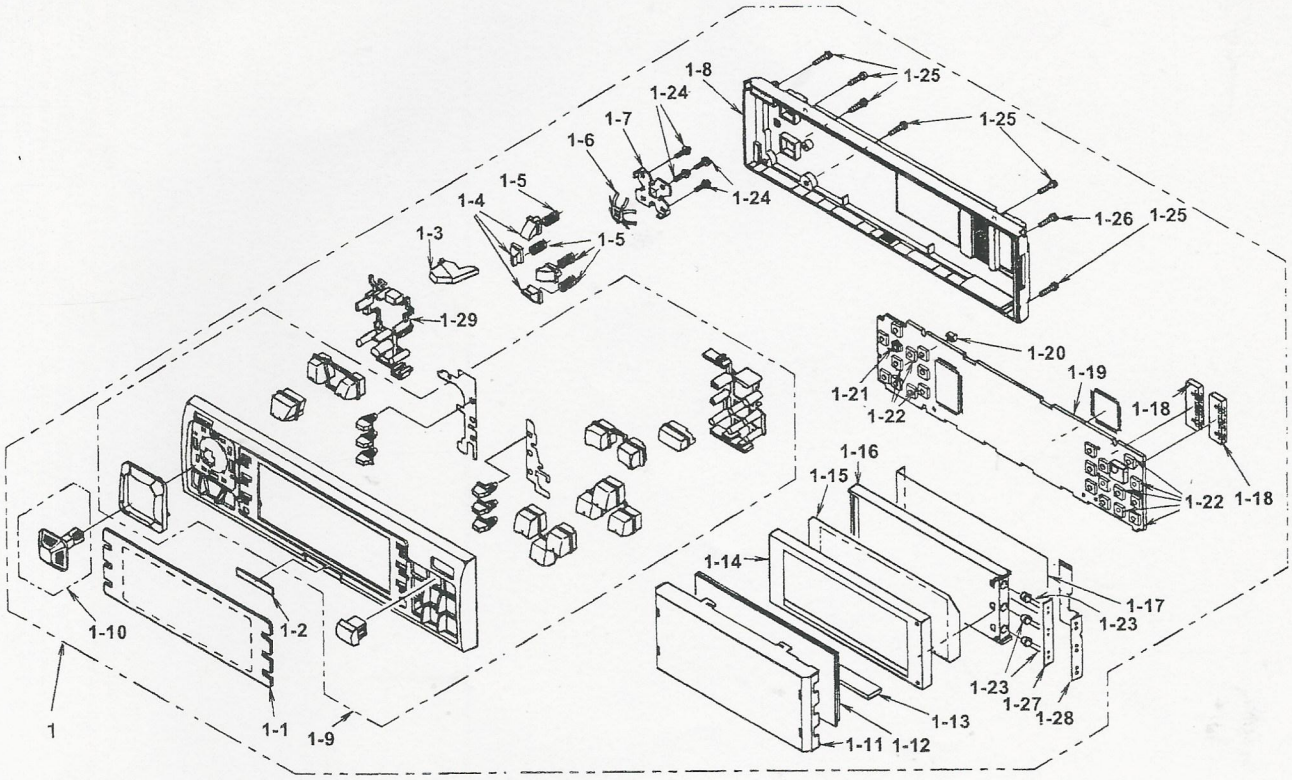

No.	PARTS No.	DESCRIPTION	Q'TY
1	940-1757A	D.C.P.	1
1-1	373-0774-06	DIAL COVER	1
1-2	378-0134-00	BADGE	1
1-3	382-7655-00	BUTTON	1
1-4	335-4846-00	PUSH PLATE	1
1-5	750-3172-00	SPRING	4
1-6	750-3149-00	SPRING	1
1-7	331-0587-20	SPRING HOLDER	1
1-8	335-4839-00	REAR COVER	1
1-9	940-7705-03	ESCUTCHEON	1
1-10	947-0385-00	KNOB(P.PLAY)	1
1-11	331-1821-00	LCD COVER	1
1-12	379-1025-71	INDICATOR	1
1-13	345-7646-00	RUBER CONNECTOR	1
1-14	347-5240-00	FILM	1
1-15	347-5238-00	FILM	1
1-16	335-5239-00	ILLUMI PLATE	1

No.	PARTS No.	DESCRIPTION	Q'TY
1-17	347-5092-00	REFLECTOR	1
1-18	076-0456-30	PLUG(DCP 10P)	2
1-19	039-0656-00	SWITCH P.W.B.	1
1-20	013-7202-50	SWITCH	1
1-21	013-6501-52	SWITCH	1
1-22	013-6501-51	SWITCH	22
1-23	001-7023-01	LED	3
1-24	716-0778-00	WAVE SCREW	4
1-25	716-1721-00	P-TIGHT SCREW(M2×8)	6
1-26	716-1726-00	WAVE SCREW(M1.7×6)	1
1-27	347-5241-00	LED HOLDER	1
1-28	039-0643-00	FPC	1
1-29	335-5099-00	ILLUMI PLATE	1
48	940-7708-02	INNER ESCUTCHEON	1
51	320-0442-22	DUSTPROOF-COVER	1
118	074-1128-00	OUTLET SOCKET	1
136	286-8515-00	SET PLATE	1

Clarion Co., Ltd. Export Division–22-3, Shibuya 2-chome, Shibuya-ku, Tokyo, 150 Japan Tel: 03-3400-1121 Fax: 03-3400-8679 Telex: J22908, J22152
Service Dept.–35-2, Hakusan 5-chome, Bunkyo-ku, Tokyo, 112 Japan Tel: 03-3813-5151 Fax: 03-3814-2550

Clarion Service Manual

Published by Service Dept.

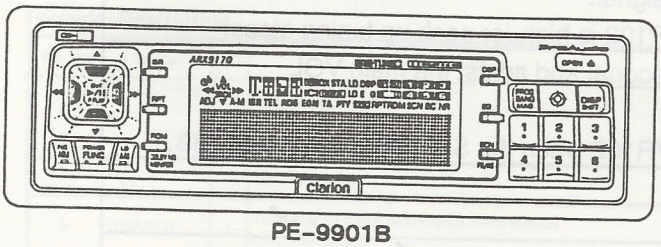

PE-9901B

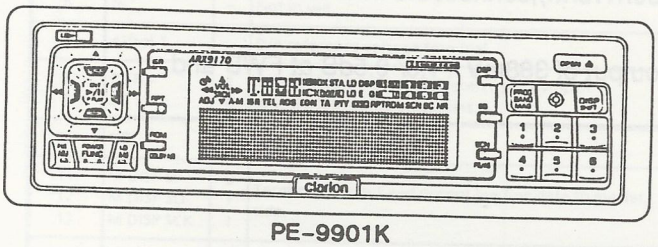

PE-9901K

AM/FM STEREO CASSETTE WITH DSP/EQ/CD CHANGER CONTROLLER

Model *ARX9170*

(PE-9901B/U.S.A.)
(PE-9901K/OTHER COUNTRIES)

■SPECIFICATIONS:

General
Power Supply Voltage :
14.4V(10.8V to 15.6V allowable), negative ground
Current Consumption : Less than 3A
Load Impedance : 10kΩ

FM Tuner
Frequency Range :
87.9MHz to 107.9MHz (PE-9901B)
87.5MHz to 108.0MHz (PE-9901K)
Usable Sensitivity : 9dBf
50dB Quieting Sensitivity : 15dBf
Stereo Separation(@1kHz, 60dBf) : 35dB
Frequency response(±3dB) :
30Hz to 15kHz

AM Tuner
Frequency Range :
530kHz to 1,710kHz (PE-9901B)
531kHz to 1,629kHz (PE-9901K)
Usable Sensitivity : 20μV

Cassette Deck
Wow and Flutter(WRMS) : 0.06%
Stereo Separation(1kHz) : 45dB
Signal-to-Noise Ratio
70μs(CrO_2,FeCr,Metal)/Dolby B/Dolby C:
58dB/67dB/74dB

Frequency Response(±3dB)
120μs(normal):30Hz to 20kHz
70μs(CrO_2,FeCr,Metal):30Hz to 20kHz

Audio
Line output(@1kHz,10kΩ) : 1000mV
Bass Control Action(@30Hz) : ±15dB
Treble Control Action(@10kHz) : ±10dB

Dimensions
178(W)×50(H)×152(D)mm

Weight:1.6kg

●Dolby noise reduction is manufactured under license from Dolby Laboratories Licensing Corporation.
●"DOLBY" and the double-D symbol DD are trademarks of Dolby Laboratories Licensing Corporation.

Specifications and design are subject to change without notice for further improvement.

■COMPONENTS:

●PE-9901B-A / PE-9901K-A

Main unit		1
Remote-controller	RCB-058-200	1
Battery(CR2058BC)	———	1
Mounting bracket (univ.)	300-9035-01	1
DCP case	335-4848-03	1
Outer escutcheon	940-7715-00	1
Extension lead	854-3842-00	1
Parts bag	———	1
Hook plate	330-8216-01	(2)
Lead holder	335-0833-01	(1)
Screw	716-0496-01	(1)

Printed in Japan 298-5212-00 JAN. 1995 Ⓜ

■ADJUSTMENT

●AM SECTION

Item	Procedure
Stop sensitivity	1.Input the 1000kHz/35dB(30%,400Hz)signal. 2.Adjust VR101 so that the voltage of TP101 is high.(or seek up tuning stops)

●FM SECTION

Item	Procedure
Stop sensitivity	1.Input the 98.1MHz/25dB(30%,400Hz)signal. 2.Adjust VR103 so that the voltage of TP102 is high.(or seek up tuning stops)
Noise convergence	1.Input the 98.1MHz/55dB(30%,400Hz)sognal and adjust the main VOL so that the output level is 0dB(0.245v). 2.Adjust the output evenly to -15dB by VR102 when the SG output is set to -30dB.

●TAPE SECTION

Item	Procedure
Dolby level	1.Insert a Dolby level test tape(400Hz-200nWb/m),connect the milli-volt meter to TP-L,TP-R and GND. 2.Adjust VR201and VR202 to obtain an output of 388mV +1.5/-0.5dB at FWD and REV direction.(Dolby switch:OFF)

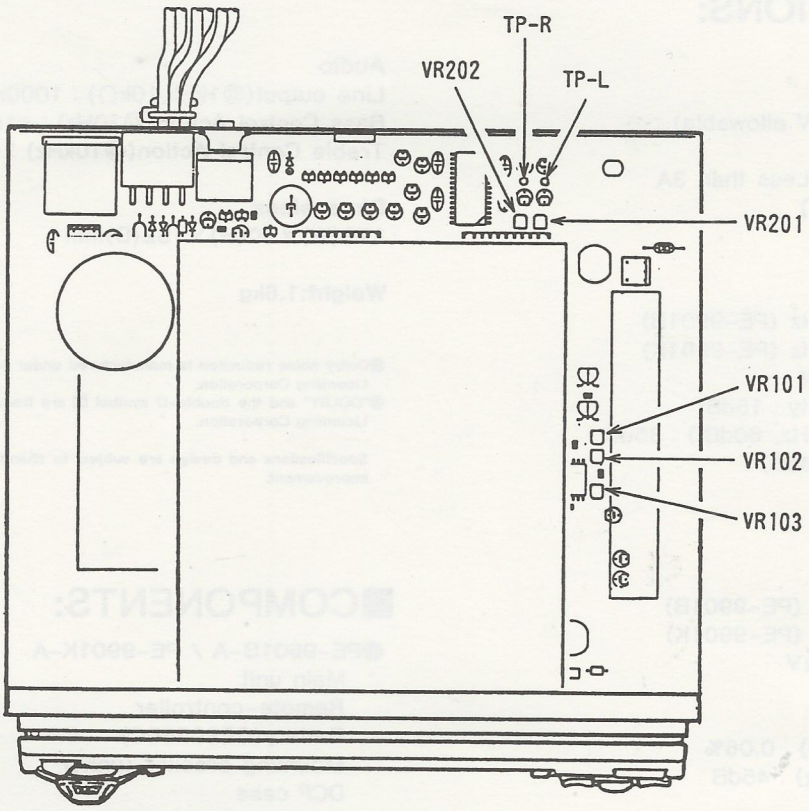

-Top view-

■ EXPLANATION OF IC's:

■ μPD78058GC-038-3B9 052-7006-01 Microcomputer for
μPD78058GC-039-3B9 052-7007-01 indications
μPD78058GC-040-3B9 052-7009-01

* The above-mentioned models are different in destination and functions mounted. They are not compatible with each other.

Outward Form

80-pin plastic QFP

Terminal Description

Pin No.	Symbol	I/O	Function
1 ∫ 3	NC	–	Not in use.
4	V_{SS}	–	GND terminal.
5	DISP REQ	I	Terminal to input REQ signal from master microcomputer.
6	NC	–	Not in use.
7	AVref 1	–	D/A reference voltage terminal.
8 9	BB RX BB TX	I O	Terminal to transmit and receive start/stop of synchronous communications.
10	NC	–	Not in use.
11 12 13	M DISP SI M DISP SO M DISP SCK	O I I	Terminal to input and output bus line data to master side.
14 ∫ 18	NC	–	Not in use.
19 ∫ 26	D 0 ∫ D 7	O	Terminal to output data to LCD driver.
27 ∫ 35	NC	–	Not in use.
33	V_{SS}	–	GND terminal.
36 ∫ 39	KO 0 ∫ KO 3	O	Terminal to output key scan signal.
40	RD	O	Strobing terminal for LCD driver lead.
41	WR	O	Strobing terminal for LCD driver light.
42	AO	O	Terminal to output data to LCD driver.
43	CS	O	Chip selection terminal for LCD driver.
44 ∫ 51	NC	–	Not in use.
52 ∫ 57	KI 0 ∫ KI 5	I	Terminal to input key scan signal.
58 59	NC	–	Not in use.
60	RESET	I	Terminal to input reset signal.
61	REMOCON	I	Terminal to input data from remote controller.
62	NC	–	Not in use.
63	BB REQ	O	Terminal to call for communication permission.
64	BUSY	I	Terminal to input signal from master side.
65 ∫ 67	NC	–	Not in use.
68	V_{DD}	–	Power supply terminal (+5V).
69 70	X 2 X 1	–	System clock terminal (4.915 MHz).

Note: Only new microcomputers are described here.

Pin No.	Symbol	I/O	Function
71 73	V_{SS}	–	GND terminal.
72	NC	–	Not in use.
74	AV_{DD}	–	DA power supply voltage terminal.
75	AVref 0	–	DA reference voltage terminal.
76 ∫ 80	NC	–	Not in use.

Key Matrix Table

Note) Some of the sets equipped with this microcomputer are not provided with all the above keys.

KEY IN / KEY OUT	KI 0 (52 pin)	KI 1 (53 pin)	KI 2 (54 pin)	KI 3 (55 pin)	KI 4 (56 pin)	KI 5 (57 pin)
KO 0 (36 pin)	ADJ		A-M	DSP	EQ	RDM
KO 1 (37 pin)	V-DW	S-UP	SCN	4	5	6
KO 2 (38 pin)	V-UP	S-DW	RPT	1	2	3
KO 3 (39 pin)		ENT	ISR TA/PTY (*1)	BAND	DISP	

(*1) Key specification depends on the destination.
Japan, North America and the third area : ISR

■ μPD78058GC-017-3B9 052-3312-00 System Controller
μPD78058GC-020-3B9 052-3313-00(Master Microcomputer)

* 052-3312-00 and 052-3313-00 are different in destination and used sets. They are not compatible with each other.

Outward Form

80-pin plastic QFP

Terminal Description (052-3312-00)

No.	Symbol	I/O	Function
77 78 79 80 1 2 3	60 Hz 125 Hz 250 Hz 500 Hz 1 KHz 3 KHz 10 KHz	I	Terminal to input analogue signal for indication of spectrum analyzer.
4	GND	–	GND terminal.
5 30	DEST 0 DEST 1	I O	Terminal to select destination. Pin No. / Destination: North America, Japan, 3rd area 5: GND, GND, VDD 30: VDD, GND, GND
6	PLL CE	O	Terminal to output CHIP ENABLE signal to PLL IC.
7	AVREF 1	I	A/D converter reference voltage input. Connected to ACC 5V.
8 9 10	PLL SI PLL SO PLL SCK	I O O	Terminal to input and output serial data to PLL IC.
11 12	M DISP SI M DISP SO	I O	Terminal to input and output data of serial bus line.
13 14 15	DISP SCK DISP RESET DISP BUSY	O I I	Terminal to input and output signal to DCP microcomputer.
16 17 18	C-BUS SI C-BUS SO C-BUS SCK	I O O	C-BUS line SI/SO/SCK terminal on master side.
19 ∫ 26 27 ∫ 29	AD 0 ∫ AD 7 A 8 ∫ A 10	I/O O	Address/data bus for SRAM interface.
31	C-BUSS SRQ	I	C-BUS line SRQ terminal on master side.
32	ACC CONT	O	ACC controlling terminal of serial bus line.
33	V_{SS}	–	GND terminal.
34	ILLUMI 1	O	"H" is outputted in the case of AMBER.
35	ILLUMI 2	O	"H" is outputted in the case of GREEN.
36	ACC 5V REM	O	Terminal to control ON/OFF of 5V system power supply (ACC 5V).
37	REM +B	O	Terminal to control ON/OFF of +B (audio system) power supply.
38	MUTE	O	Terminal to output SYSTEM MUTE signal. It is open in U.S.A. and the third area.
39	MOTOR INT	O	Terminal to control motor antenna.
40	RD	O	Strobing terminal for SRAM lead.
41	WR	O	Strobing terminal for SRAM light.
42	WAIT	O	Terminal to enable SRAM chip.
43	ASTB	O	Latch terminal for SRAM light.
44	MASTER ON	O	Terminal to output signal transmitted to be on to master side.
45	SLAVE ON	I	Terminal to input signal transmitted to be on from slave side.
46 47 48	EVOL CLK EVOL DATA EVOL CE	O O O	Terminal to transfer serial data to electric volume.
49	PHONE INT	I	Terminal to input interruption signal from telephone.
50	BEEP	O	Sensor tone output terminal.
51	ST DET	O	Terminal to detect stereo signal.
52 53	FM SD AM SD	I	Terminal to input stop signal during automatic frequency tuning.
54 55	MOTOR – MOTOR +	O	Terminal to control direction of motor revolution of flap. MOTOR + / MOTOR – / Direction of flap movement H / H / Brake H / L / In the direction of OPEN L / H / In the direction of CLOSE L / L / —
56	REM MOTOR	O	Flap block battery ON/OFF control terminal. Flap power ON: H
57	DR SENC	I	Input terminal to detect opening and closing of cassette door. Pack in : "H" No pack : "L"
58	OPEN SENC	I	Terminal to detect opening of flap. Active "L".
59	CLOSE SENC	I	Terminal to detect closing of flap. Active "L".
60	RESET	I	Terminal to input reset signal.
61	ILLUMI DET	I	Input terminal for ILLUMI detection.
62	B/U	I	Input terminal for BACK UP detection. Active "L".
63	ACC IN	I	Input terminal for ACC ON/OFF detection. "H" at ACC ON. "L" at ACC OFF.
64	EJECT	I	Input terminal for EJECT key detection. The terminal turns "H" when key is pressed.
65	DISP REQ	I	Terminal to input REQ signal from DCP microcomputer.
66	DCP IN	I	Input terminal for DCP detection. The terminal turns "L" when DCP is detected.
67	FUNC SW	I	Input terminal for power (function) SW detection. The terminal turns "L" when FUNCTION SW is ON.
68	V_{DD}	–	Power supply voltage terminal (+5V).
69 70	X 2 X 1	–	System clock terminal.
71 73	V_{SS}	–	GND terminal.
72	NC	–	Not in use.
74	AV_{DD}	–	A/D power supply terminal (+5V).
75	AVREF 0	–	A/D reference voltage terminal (+5V).
76	V_{SS}	–	GND terminal.

Differences (052-3313-00)

Pin No.	Symbol	I/O	Function
59 60	DEST 0 DEST 1	I O	Terminal to select destination by connecting to V_{DD} or GND. Pin No. / GND / V_{DD} 59 / J / U·K 58 / J·U / K J: Japan U: USA K: 3rd area

* 5, 30, 54~56, 77~3··· Not in use.

■PARTS LIST: ◎Electrical section

Note) Several different parts listed in the column are alternative parts. One of those parts is used in the set.

◎MAIN PWB

REF NO.	PART NO.	DESCRIPTION	QTY
D301, 302, 304	001-0330-00	Diode 1SS119	3
D401-407	001-0367-00	Diode 1SS226	7
	001-0541-00	Diode MA157A	
D307	001-0377-37	Diode MA4068L	1
	001-0400-37	Diode HZS6.8JB1	
D201	001-0377-46	Diode MA4091L	1
	001-0376-47	Diode MTZJ9.1B	
	001-0400-46	Diode HZS9.1JB1	
D306	001-0423-22	Diode MA4075	1
D303, 318	001-0466-00	Diode S5688B	2
D202, 204, 205 311-313, 320	001-0516-00	Diode MA111	7
IC203, 204	051-0350-55	IC NJM4558M	2
IC401, 402	051-0556-01	IC NJM2058M	2
IC302	051-0869-05	IC MB3771PF	1
IC304	051-1014-05	IC TA7291F	1
	051-1014-35	IC MC13591M	
IC306	051-1046-46	IC LC3517BML-12	1
IC305	051-1051-05	IC TC74HC573A	1
	051-1051-35	IC MC74HC573AF	
IC103	051-1717-05	IC LC2719M	1
IC303	051-3201-00	IC AN77L06	1
IC202	051-5004-00	IC CXA1946Q	1
IC201	051-5200-90	IC CXA1332M	1
IC307	051-7400-06	IC HD74LS07FP	1
IC301	052-3312-00	IC μPD78058GC-017-3B9	1
Q209	100-1162-00	Transistor 2SA1162	1
Q102, 103, 304, 328	101-1237-00	Transistor 2SB1237	4
Q322	101-1243-00	Transistor 2SB1243	1
Q303	101-1274-00	Transistor 2SB1274	1
Q208, 305, 315, 316	102-2712-00	Transistor 2SC2712	4
	102-2412-00	Transistor 2SC2412	
Q107, 108	102-2712-51	Transistor 2SC2712GL	2
	103-0601-50	Transistor 2SD601A-R, S	
Q201-206	103-1306-00	Transistor 2SD1306	6
	103-1328-00	Transistor 2SD1328	
Q207, 311, 314	103-1802-60	Transistor 2SD1802FA (R, S, T, U)	3
Q312, 313	103-1858-50	Transistor 2SD1858Q, R	2

REF NO.	PART NO.	DESCRIPTION	QTY
Q309	125-0002-02	Transistor RN2402	1
Q301, 310, 319-321	125-2004-02	Transistor RN1402	5
Q323, 329	125-2004-06	Transistor RN1406	2
L101	010-2003-03	Coil AM	1
L301-303	010-2198-56	Coil 2.2μH	3
L105, 106	010-2230-14	Coil 2.2μH	2
L104, 107	010-2230-26	Coil 22μH	2
L103	010-2230-38	Coil 220μH	1
VR101, 201, 202	012-5123-06	Semi Fixed VR 10kΩ	3
VR102, 103	012-5123-13	Semi Fixed VR 220kΩ	2
SUP101	060-0122-10	Surge Protector DSP-201M	1
X301	061-1062-10	X-tal 4.19MHz	1
X101	061-1066-00	X-tal 7.2MHz	1
C320	042-0458-06	Electro-C 10V 22μF	1
C316	042-0467-00	D-layer-C 5.5V 0.1F	1
C206, 213	042-0537-00	Electro-C 50V 0.56μF	2
C319, 371	172-1041-11	Polyestor-C 0.1μF J	2
C305	172-4731-11	Polyestor-C 0.047μF J	1
C204, 205, 211, 212	173-2221-10	Polyestor-C 2200pF J	4
C142-145, 172, 173 176, 177, 179, 183 186, 188, 324, 334 340-342, 344, 346 347, 349, 351-358 360, 361, 363, 366 368	176-1011-00	Ceramic-chip-C 100pF CH	34
C310, 311	176-1201-00	Ceramic-chip-C 12pF CH	2
C138	176-1501-00	Ceramic-chip-C 15pF CH	1
C139	176-1801-00	Ceramic-chip-C 18pF CH	1
C251, 252, 338, 339 367	176-2211-00	Ceramic-chip-C 220pF CH	5
C119	178-1022-78	Ceramic-chip-C 1000pF K	1
C113, 146, 163, 174 180, 309, 313, 365 369	178-1032-78	Ceramic-chip-C 0.01μF K	9
C406, 407	178-1042-78	Ceramic-chip-C 0.1μF K	2
C217, 227	178-1222-78	Ceramic-chip-C 1200pF K	2
C402, 403	178-1522-78	Ceramic-chip-C 1500pF K	2
C404, 405	178-1532-78	Ceramic-chip-C 0.015μF K	2

REF NO.	PART NO.	DESCRIPTION	QTY
C221, 231	178-1822-78	Ceramic-chip-C 1800pF K	2
C118, 141, 149, 168 175, 181, 185, 303 321, 323, 328, 329 333, 345, 370, 374	178-2232-78	Ceramic-chip-C 0.022μF K	16
C408, 409	178-2242-78	Ceramic-chip-C 0.22μF	2
C120, 121, 410, 411	178-2732-78	Ceramic-chip-C 0.027μF K	4
C414, 415	178-4722-78	Ceramic-chip-C 4700pF K	2
C116, 216, 226, 246 250, 312	178-4732-78	Ceramic-chip-C 0.047μF K	6
C412, 413	178-5632-78	Ceramic-chip-C 0.056μF K	2
C114	178-6832-78	Ceramic-chip-C 0.068μF K	1
C236	183-1053-61	Electro-C 50V 1μF	1
C112, 117, 202, 208 218, 222, 224, 228 232, 234, 247, 308 417-423, 425-431	183-1063-31	Electro-C 16V 10μF	26

REF NO.	PART NO.	DESCRIPTION	QTY
C245	183-1073-21	Electro-C 10V 100μF	1
C301	183-2253-61	Electro-C 50V 2.2μF	1
C184	183-2263-31	Electro-C 16V 22μF	1
C165, 207, 214	183-3343-61	Electro-C 50V 0.33μF	3
C147	183-3353-61	Electro-C 50V 3.3μF	1
C401	183-3363-21	Electro-C 10V 33μF	1
C201, 203, 209, 210 215, 220, 225, 230 235, 238, 239 240-243, 248, 249	183-4753-51	Electro-C 35V 4.7μF	17
C140, 237, 306, 432	178-4763-11	Electro-C 6.3V 47μF	4
C150, 244	178-4763-31	Electro-C 16V 47μF	2
C223, 233	178, 6843, 61	Electro-C 50V 0.68μF	2
C318	184-4773-32	Electro-C 16V 470μF	1

◎SWITCH PWB

REF NO.	PART NO.	DESCRIPTION	QTY
IC101	051-6010-00	IC SED1526F0A	1
IC102	052-7006-01	IC μPD78058GC-038-3B9	1
L101	010-2198-56	Coil 2.2μH	1
IR101	060-0321-00	IR receiver RS-21-B01	1
X101	060-1009-00	Ceramic resonator 4.915MHz	1
C101, 103	042-0397-00	Tantal-C 16V 1μF	2

REF NO.	PART NO.	DESCRIPTION	QTY
C109	042-0406-01	Tantal-C 6.3V 47μF	1
C110	042-0416-02	Tantal-C 10V 10μF	1
C112, 113	176-1011-00	Ceramic-chip-C 100pF CH	2
C111	176-2211-00	Ceramic-chip-C 220pF CH	1
C114, 115	178-1032-78	Ceramic-chip-C 0.01μF	2
C104-108	178-1042-78	Ceramic-chip-C 0.1μF	5

■ CIRCUIT DIAGRAM: 1/4

◎ SWITCH PWB

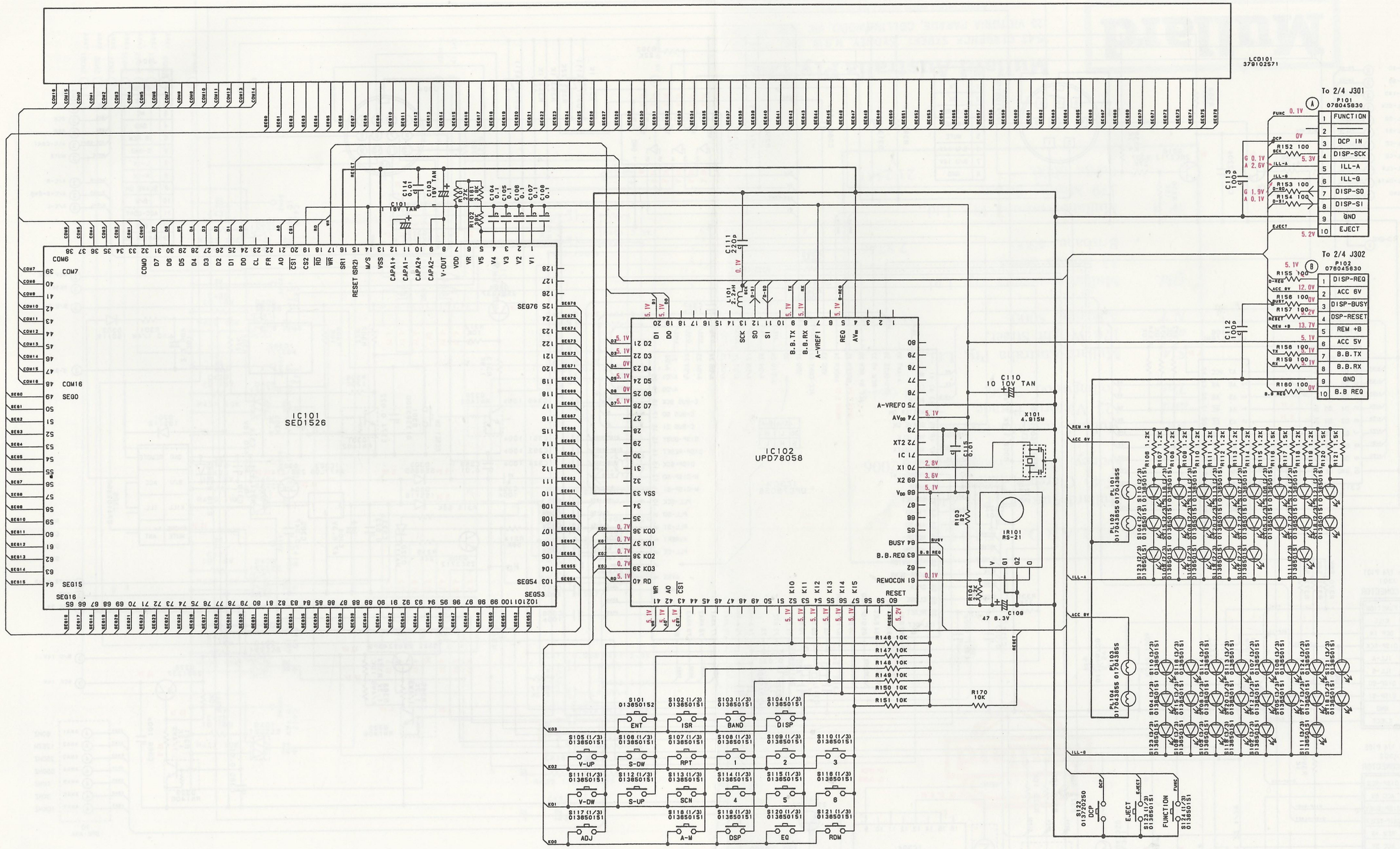

■ CIRCUIT DIAGRAM: 2/4

◎ MAIN PWB

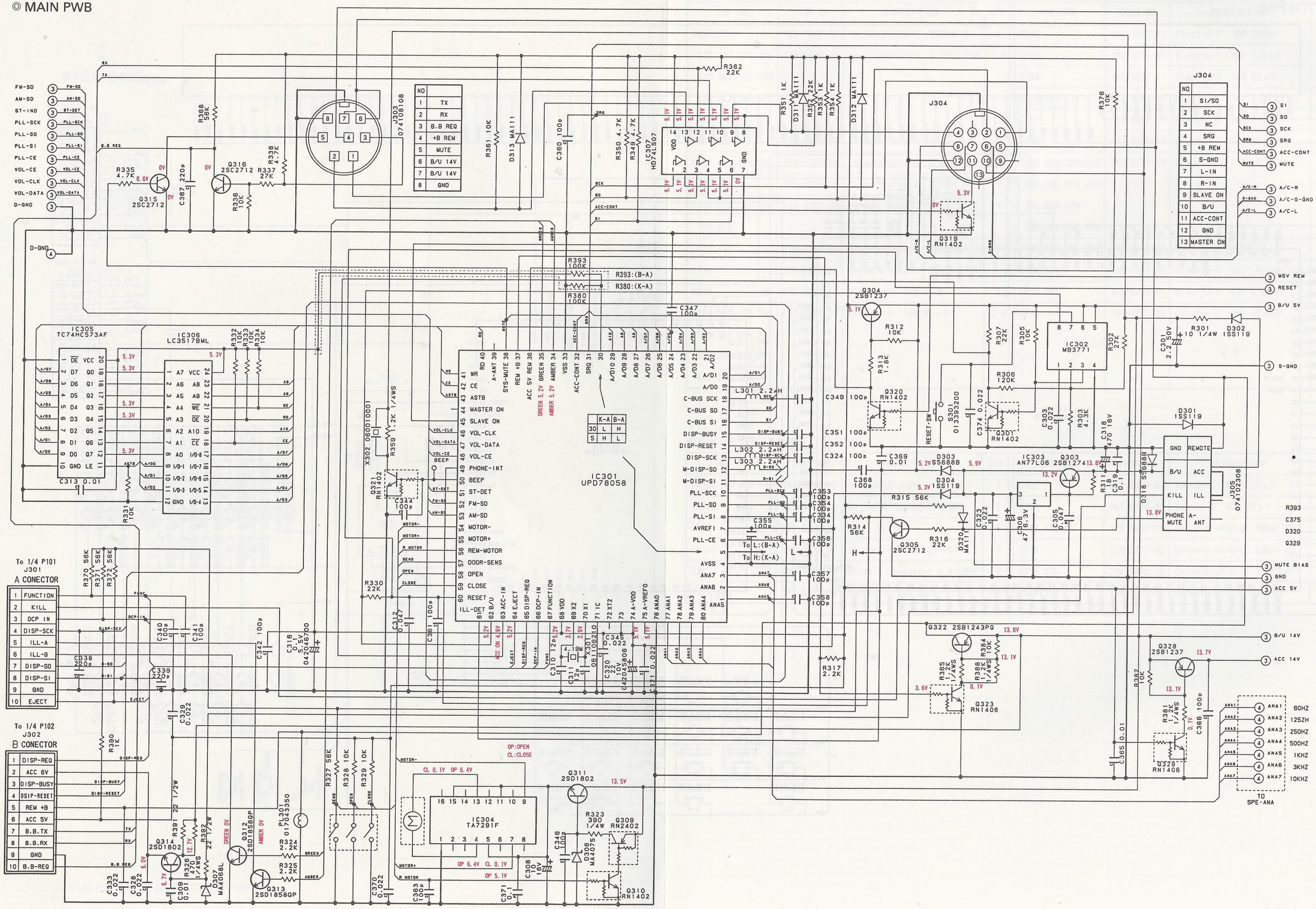

ARX9170

ARX9170

■ CIRCUIT DIAGRAM: 3/4

◎ MAIN PWB

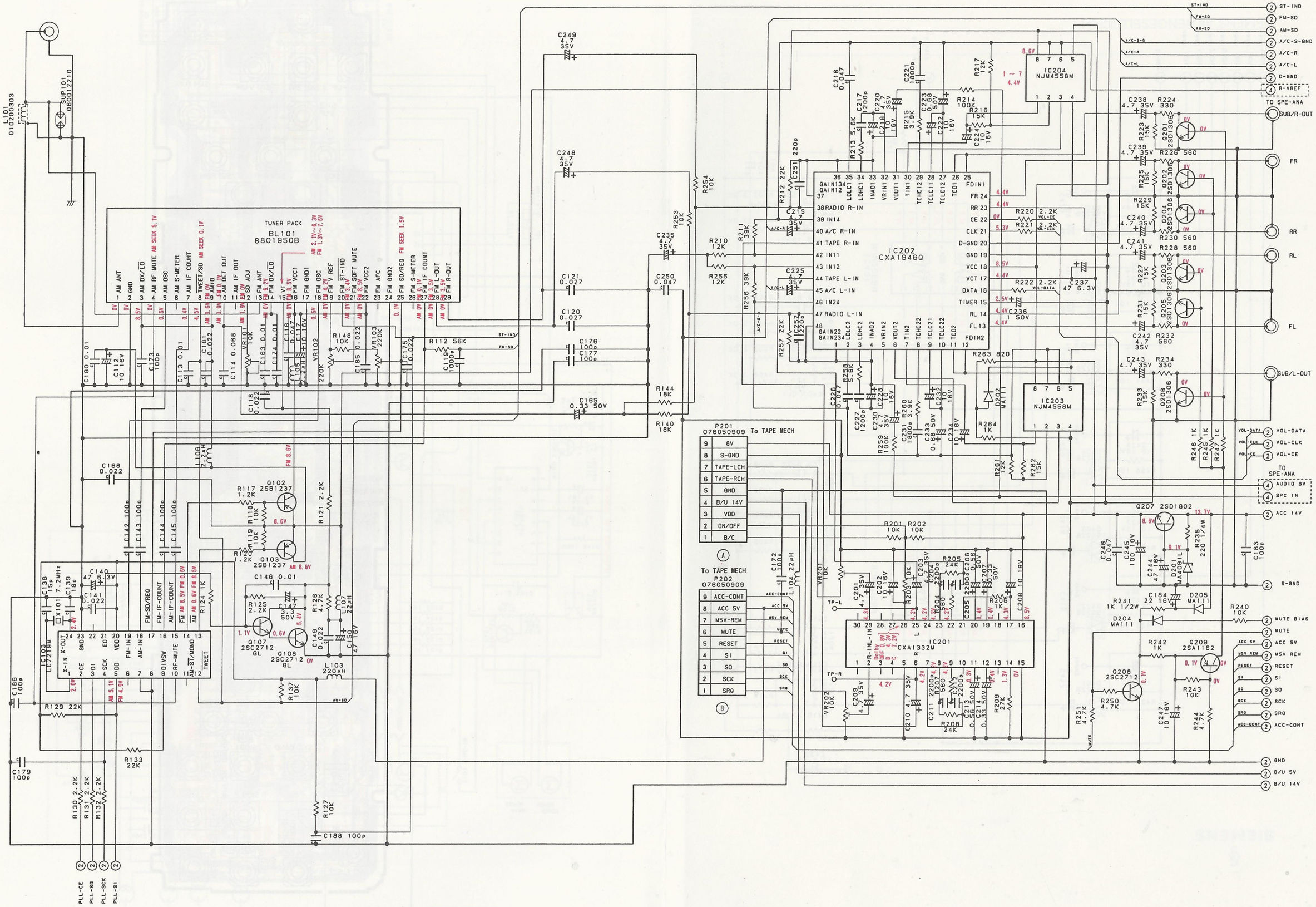

ARX9170

ARX9170

■ CIRCUIT DIAGRAM: 4/4

◎ MAIN PWB

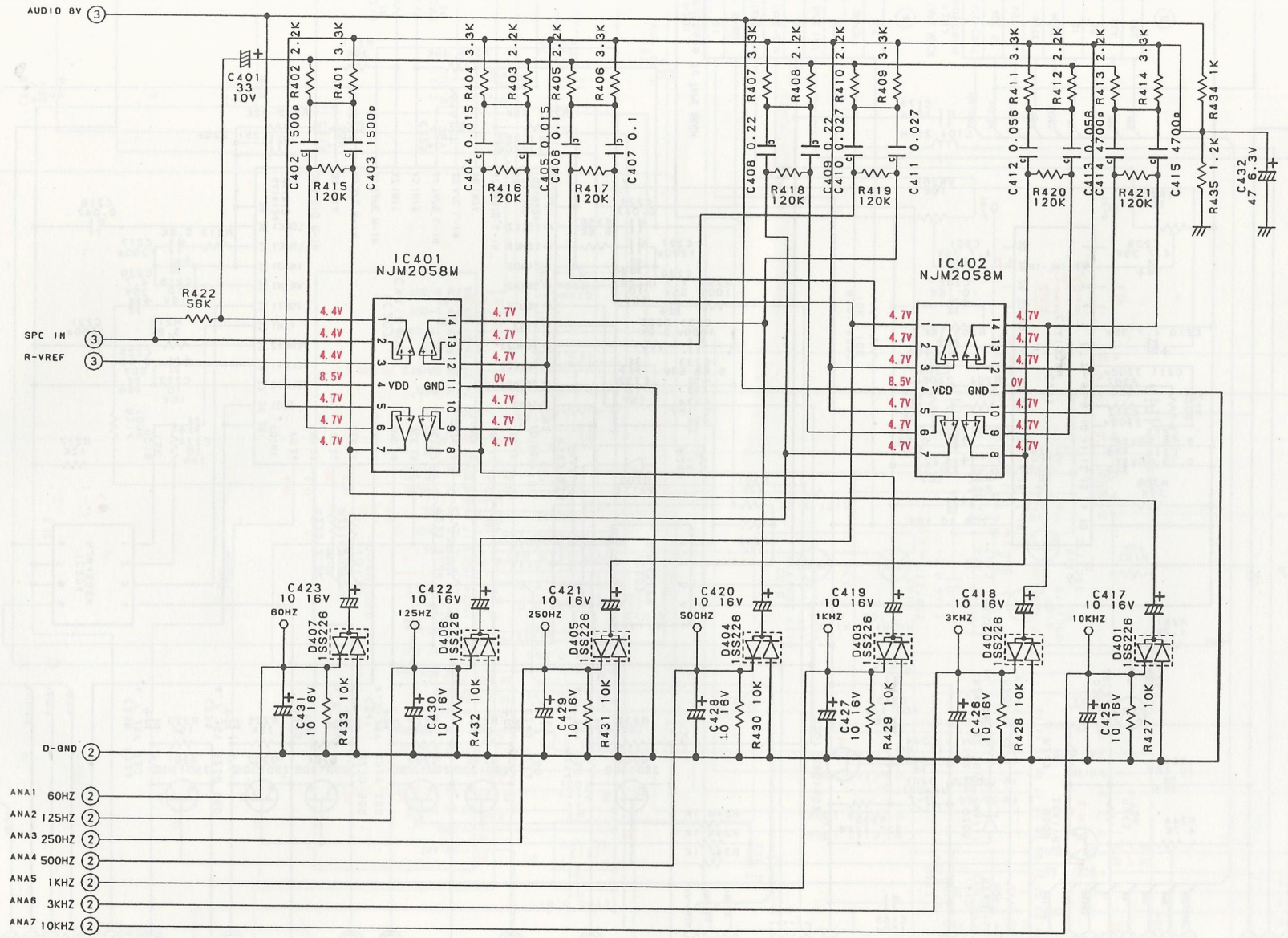

■ PRINTED WIRING BOARD: SWITCH PWB

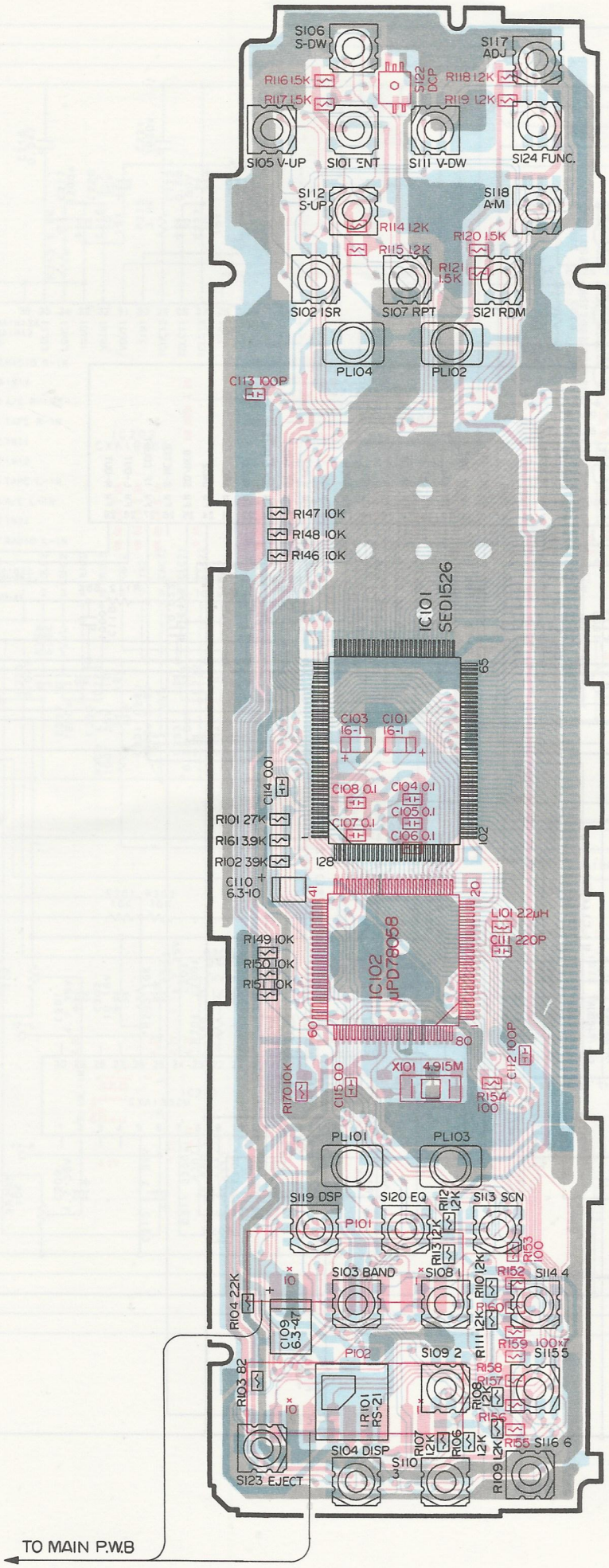

ARX9170

■ PRINTED WIRING BOARD: MAIN PWB

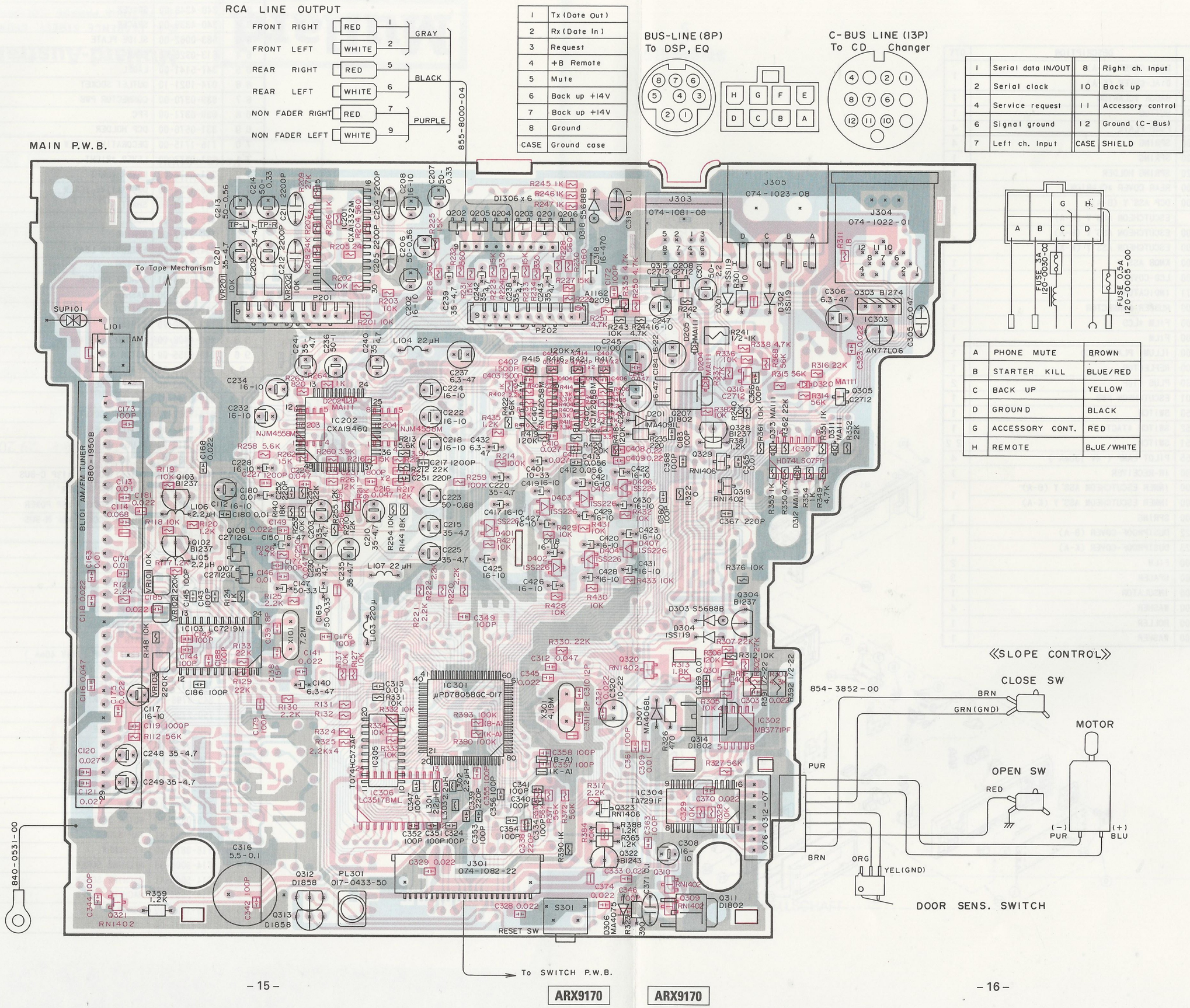

1	Tx (Date Out)
2	Rx (Date In)
3	Request
4	+B Remote
5	Mute
6	Back up +14V
7	Back up +14V
8	Ground
CASE	Ground case

1	Serial data IN/OUT	8	Right ch. Input
2	Serial clock	10	Back up
4	Service request	11	Accessory control
6	Signal ground	12	Ground (C-Bus)
7	Left ch. Input	CASE	SHIELD

A	PHONE MUTE	BROWN
B	STARTER KILL	BLUE/RED
C	BACK UP	YELLOW
D	GROUND	BLACK
G	ACCESSORY CONT.	RED
H	REMOTE	BLUE/WHITE

■EXPLODED VIEW・PARTS LIST:

REF NO.	PART NO.	DESCRIPTION	QTY
1	373-0774-00	DIAL-COVER (B-A)	1
	373-0774-03	DIAL-COVER (K-A)	
2	378-0134-00	BADGE *CLARION	1
3	382-7665-00	BUTTON	1
4	335-4846-00	PUSH PLATE	4
5	750-3172-00	SPRING	4
6	750-3149-00	SPRING	1
7	331-0587-20	SPRING HOLDER	1
8	335-4839-00	REAR COVER *CLARION	1
9	DCP-038-600	DCP ASS'Y (B-A)	1
	940-1731A	ESCUTCHEON ASS'Y (K-A)	
10	940-7703-00	ESCUTCHEON ASS'Y (B-A)	1
	940-7705-00	ESCUTCHEON ASS'Y (K-A)	
24	947-0385-00	KNOB ASS'Y	1
28	331-0580-00	LCD-COVER	1
29	379-1025-71	INDICATOR	1
30	345-7646-00	RUBBER CONNECTOR	1
31	347-5138-00	FILM *LCD	1
32	347-5140-00	FILM	1
33	335-4842-00	ILLUMI PLATE *LCD	1
34	347-5139-00	REFLECTOR	1
35	076-0456-30	PLUG *10P	2
37	039-0470-01	ESCUTCHEON PWB	1
40	013-7202-50	SWITCH	1
41	013-6501-52	SWITCH *TACT	1
42	013-6501-51	SWITCH	22
43	017-0438-55	PILOT LAMP (4V 150mA)	4
46	060-0321-90	IR-RECEIVER	1
48	940-7707-00	INNER ESCUTCHEON ASS'Y (B-A)	1
	940-7708-00	INNER ESCUTCHEON ASS'Y (K-A)	
50	750-2626-00	SPRING	1
51	320-0442-22	DUSTPROOF-COVER (B-A)	1
	320-0442-23	DUSTPROOF-COVER (K-A)	
54	347-5142-00	FILM	2
55	340-4341-00	SPACER	3
56	347-4082-00	INSULATOR	1
57	745-0640-00	WASHER	4
58	340-4340-00	ROLLER	1
59	746-0887-00	WASHER	1

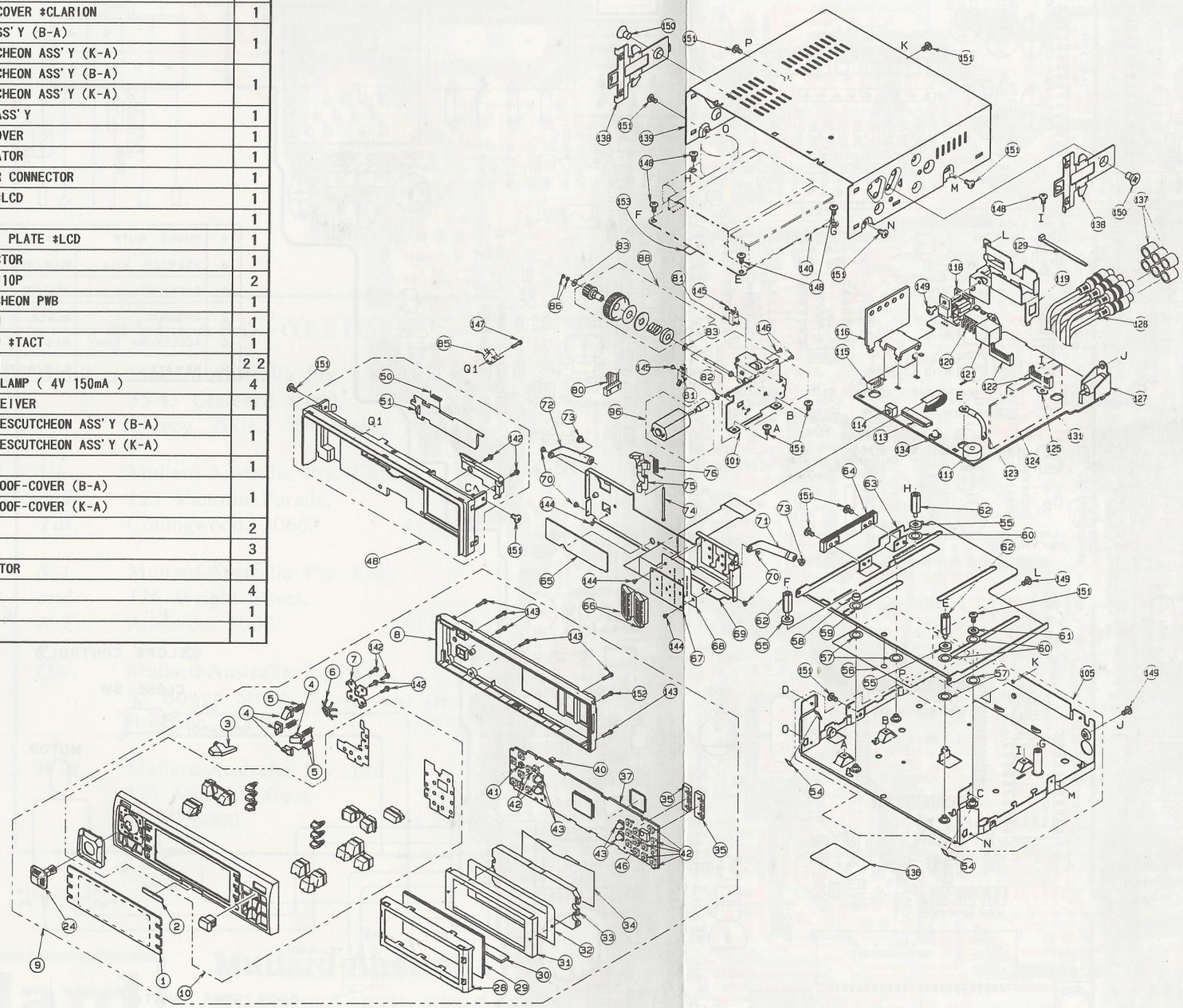

REF NO.	PART NO.	DESCRIPTION	QTY
60	746-0623-01	WASHER	3
61	340-4348-00	SPACER	1
62	340-4339-00	SPACER	3
63	683-0062-00	SLIDE PLATE	1
64	613-0326-00	GEAR	1
65	347-5141-00	LABEL	1
66	074-1021-10	OUTLET SOCKET	2
67	039-0370-00	CONNECTOR PWB	1
68	039-0371-00	FPC	1
69	331-0576-00	DCP HOLDER	1
70	716-1715-00	DECORATIVE SCREW	4
71	331-0577-00	LEVER *RIGHT	1
72	331-0578-00	LEVER *LEFT	1
73	716-1724-00	DECORATIVE SCREW	2
74	341-1593-00	SHAFT	1
75	335-4841-00	HOOK	1
76	750-3177-00	SPRING	1
80	854-3852-00	EXTENSION LEAD	1
81	013-3757-00	SWITCH	2
82	621-0034-01	THRUST HOLDER	1
83	745-0646-00	WASHER	2
85	013-3880-00	SWITCH	1
86	743-1500-20	E-RING	2
88	960-4409-00	T LOAD GEAR ASS'Y	1
96	948-0355-00	MOTOR ASS'Y	1
101	946-0054-00	GEAR BOX ASS'Y	1
105	946-0053-00	LOWER CASE ASS'Y	1
111	060-0100-01	BUZZER	1
113	074-1082-22	OUTLET SOCKET	1
114	013-3932-00	SWITCH *RESET	1
115	076-0312-07	PLUG	1
116	331-0639-00	IC HOLDER	1
118	074-1022-01	OUTLET SOCKET *13P C-BUS	1
119	331-0579-00	CONNECTOR HOLDER	1
120	074-1023-08	OUTLET SOCKET *8P POWER	1
121	074-1081-08	OUTLET SOCKET *8P N-BUS	1
122	076-0509-09	PLUG	2
123	840-0531-00	BONDING WIRE	1
124	880-1950B	AM/FM TUNER	1
125	073-0731-00	TERMINAL	1
127	092-9000-00	ANT-RECEPT	1
128	855-8000-04	RCA PIN CORD	1
129	335-0833-01	LEAD HOLDER	1
131	039-0472-01	MAIN PWB	1
134	017-0433-50	PILOT LAMP (14V 40mA)	1
136	286-8366-00	SET PLATE (B-A)	1
	286-8375-00	SET PLATE (K-A)	
137	345-3799-00	RUBBER PARTS	6
138	750-2796-01	SPRING *SIDE	2
139	310-1564-00	UPPER CASE	1
140	930-0738-80	TAPE MECH *GFC-1	1
142	716-0778-00	WAVE SCREW	6
143	716-1721-00	P-TIGHT SCREW	6
144	738-1725-17	PRECISION SCREW	3
145	716-0670-01	SCREW	2
146	716-0882-00	MOTOR SCREW	2
147	702-2008-81	TAP SCREW	1
148	716-0878-00	IT-SCREW	5
149	714-3006-80	MACHINE SCREW	3
150	714-5008-41	MACHINE SCREW	2
151	714-2604-80	MACHINE SCREW	13
152	716-1726-00	SCREW	1
153	347-2931-00	INSULATOR	1

CIRCUIT DIAGRAM:

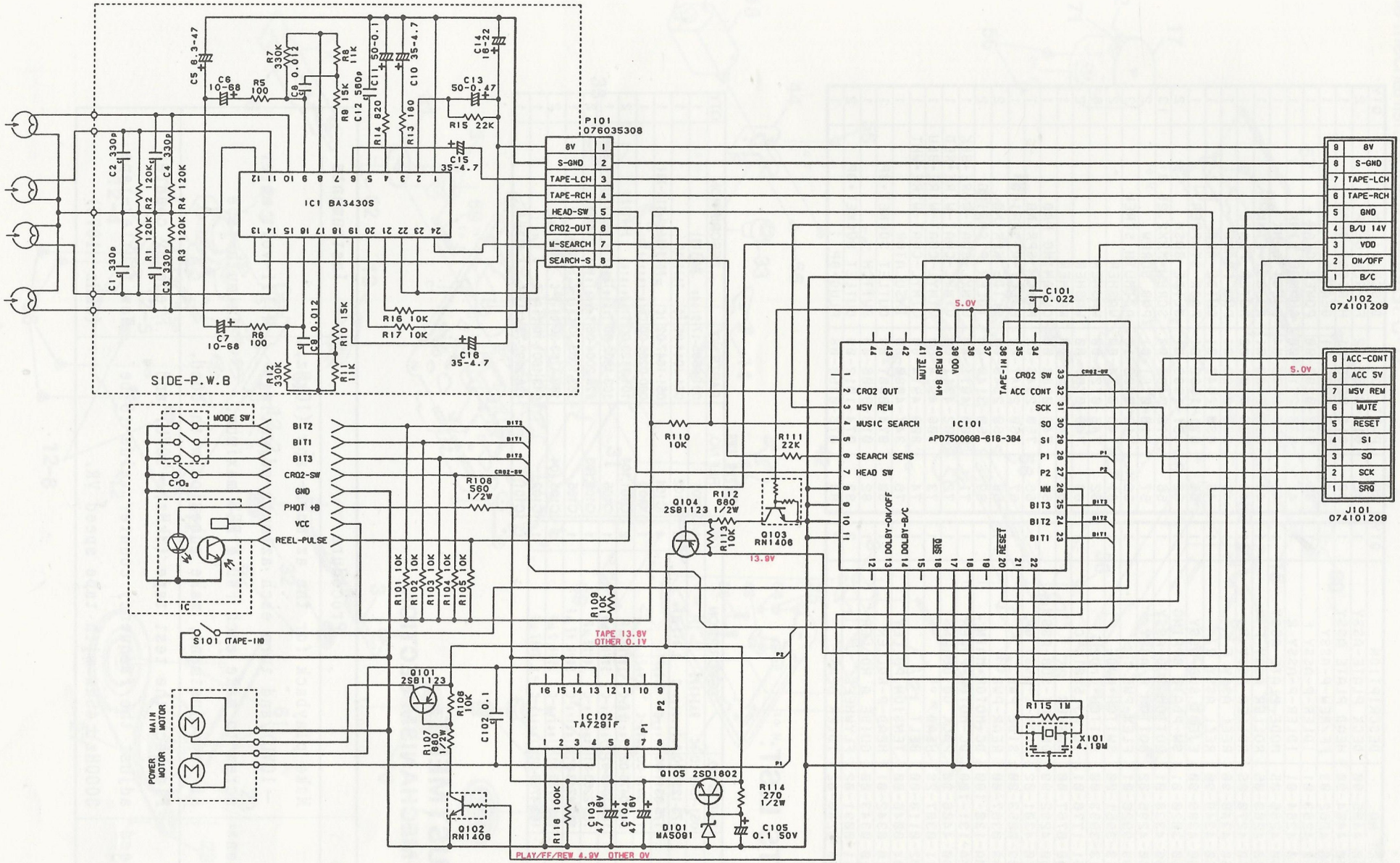

■ PRINTED WIRING BOARD:

◎ Tape mechanism (GFC-1)

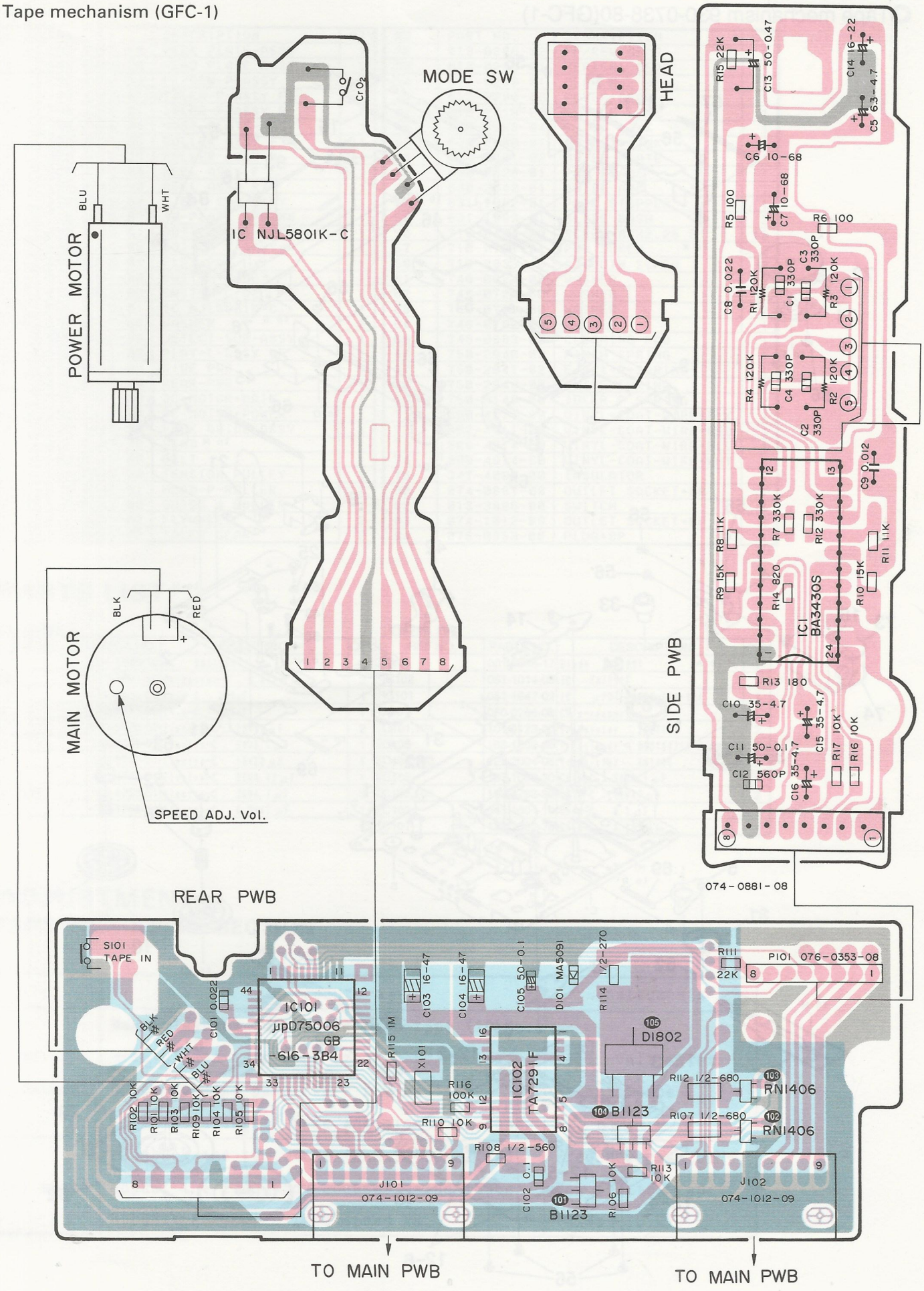

■EXPLODED VIEW · PARTS LIST:

◎Tape mechanism 930-0738-80(GFC-1)

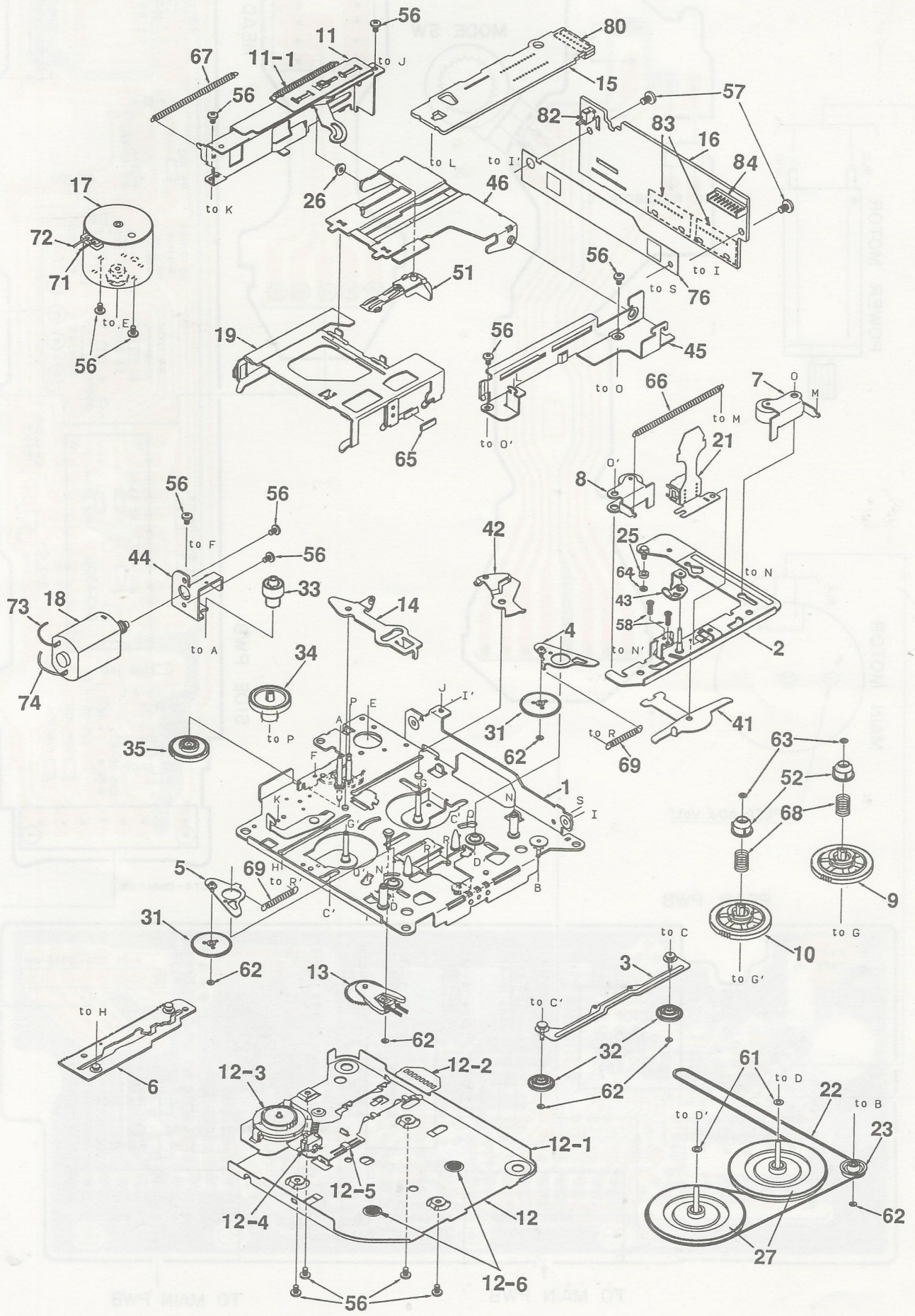

NO	PART NO.	DESCRIPTION	QTY
1	960-4405-90	DECK PLATE-ASSY	1
2	960-4404-90	HEAD PLATE ASSY	1
3	960-4262-03	FF/REW-P-ASSY	1
4	960-4263-01	IDLER-P-ASSY F	1
5	960-4264-01	IDLER-P-ASSY R	1
6	960-4266-05	MODE PLATE-ASSY	1
7	960-4269-05	ROLLER ASSY F	1
8	960-4270-05	ROLLER ASSY R	1
9	960-4348-90	REEL ASSY F	1
10	960-4349-90	REEL ASSY R	1
11	960-4389-90	EJECT SUB-ASSY	1
11-1	750-3020-01	SW-PLATE SPRING	1
12	960-4338-01	BOTTOM SUB-ASSY	1
12-1	960-4295-02	BOTTOM P-ASSY	1
12-2	099-9926-01	FLEX PWB	1
12-3	013-3951-00	SWITCH*MODE	1
12-4	013-3953-00	SWITCH*CrO2	1
12-5	051-1776-01	IC NJL5801K-C	1
12-6	746-0767-00	WASHER	2
13	960-4282-99	DETECT-SUB-ASSY	1
14	960-4301-02	PLAY-L-ASSY GF	1
15	039-0053-00	SIDE PWB	1
16	039-0367-00	REAR-PWB	1
17	SMA-130-100	DC-MOTOR*MAIN	1
18	SMA-131-100	DC-MOTOR*POWER	1
19	960-4406-90	PACK GUIDE ASSY	1
21	011-0307-28	HEAD	1
22	602-0118-00	BELT	1
23	604-0046-00	TENSION PULLEY	1
25	610-0342-01	HEAD-P-ROLLER	1
26	610-0343-00	GUIDE A ROLLER	1
27	611-0091-02	FLYWHEEL	2
31	613-0285-02	IDLER GEAR	2

NO	PART NO.	DESCRIPTION	QTY
32	613-0286-02	FF/REW GEAR	2
33	613-0288-01	HERICAL GEAR	1
34	613-0289-01	GEAR A	1
35	613-0290-00	POWER GEAR	1
41	630-2718-00	CHANGE LINK	1
42	630-2598-04	EJECT LINK	1
43	630-2600-01	ADJUST LINK	1
44	630-2601-02	MOTER PLATE	1
45	630-2626-01	PWB FRAME	1
46	630-2642-01	GUIDE ARM	1
51	631-1992-01	PACK STOPPER	1
52	631-1993-01	SLIDE BUSH	2
56	716-0484-00	SCREW*M2X2.25 B	13
57	716-0761-01	PWB SCREW	2
58	716-0833-10	AZIMUTH SCREW	2
61	746-0624-00	WASHER	2
62	746-0724-00	WASHER	6
63	746-0761-00	WASHER	2
64	746-0762-00	WASHER	1
65	746-0883-00	CLEANING PAD	1
66	750-2946-02	PINCH SPRING	1
67	750-2947-02	EJECT-P-SPRING	1
68	750-2949-00	SLIDE SPRING	2
69	750-3148-00	IDLER P SPRING	2
71	800-4911-60	VINYL-COAT-WIRE*BLK	1
72	802-4911-60	VINYL-COAT-WIRE*RED	1
73	806-4914-60	VINYL-COAT-WIRE*BLU	1
74	809-4914-60	VINYL-COAT-WIRE*WHT	1
76	347-4080-00	INSULATOR	1
80	074-0881-08	OUTLET SOCKET*8P	1
82	013-3906-00	SWITCH	1
83	074-1012-09	OUTLET SOCKET*9P	2
84	076-0353-08	PLUG*8P	1

■PARTS LIST:

○Side PWB

REF NO.	PARTS NO.	DESCRIPTION	QTY
IC1	051-1546-10	IC BA3430S	1
C8,9	173-1231-10	Polyester-C 0.012μF	2
C1-4	175-3311-00	Chip-C 330pF	4
C12	175-5611-00	Chip-C 560pF	1
C6,7	042-0476-02	Electro-C 10V68μF	2
C11	183-1043-61	Electro-C 50V0.1μF	1
C14	183-2263-31	Electro-C 16V22μF	1
C13	183-4743-61	Electro-C 50V0.47μF	1
C10,15,16	183-4753-51	Electro-C 35V4.7μF	3
C5	183-4763-11	Electro-C 6.3V47μF	1

○REAR PWB

REF NO.	PARTS NO.	DESCRIPTION	QTY
D101	001-0595-17	Diode MA5091	1
IC102	051-1014-05	IC TA7291F	1
IC101	051-1647-02	IC μPD75006GB-616-3B4	1
X101	060-0266-00	Cera-resonator	1
Q101,104	101-1123-00	Transistor 2SB1123	2
Q105	103-1802-60	Transistor 2SD1802FA-R, S, T, U	1
Q102,103	125-2004-06	Transistor RN1406	2
C105	163-1063-30	Chip-C 50V0.1μF	1
C103,104	163-4763-30	Chip-C 16V47μF	2
C102	043-1601-10	Chip-C 0.1μF	1
C101	178-2232-78	Chip-C 0.022μF	1

■ADJUSTMENT:

●TAPE MECHANISM SECTION

Item	Procedure	Instruments
Azimuth Adjustment	Make playback for the azimuth-tape (10kHz, −10VU), and turn each azimuth-adjusting screw to make each FWD & REV maximum. After adjustment, make adhesion with bond.	Milli-volt meter Azimuth-tape
Tape speed	Playback the test tape (3kHz, −10VU) and adjust the frequency counter value to be 3000Hz±45Hz with tape speed VR.	Freqency counter Wow flutter-tape (3kHz−10VU)