Clarion

Clarion (Taiwan) Manufacturing Co., Ltd.
Export Dividsion-5F.,Building F,No.69-8,Sec. 2,Chung Tsun East Road,Tamsui,Taipei Shien,Taiwan,R.O.C.
Tel:02-2809-1333 Fax:02-2808-3348
Clarion Co., Ltd.
Export Division-22-3, Shibuya 2-chome, Shibuyaku, Tokyo, 150-8335 Japan Tel:03-3400-1121

Published by Service Dept.
298-5788-00 MAR.2000P
Printed in Taiwan R.O.C.

Service Manual

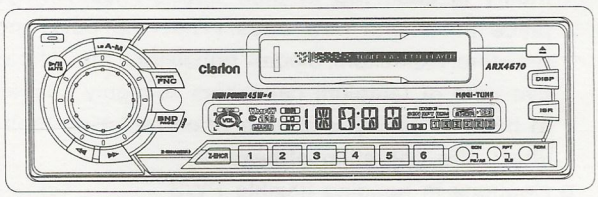

(ARX4670)

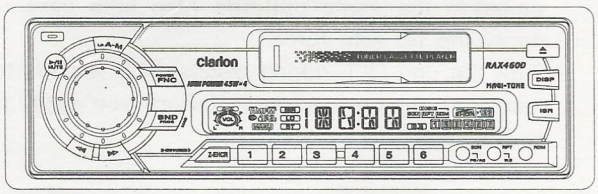

(RAX460D)

AM/FM Cassette Player With CD Changer Control

Model ***ARX4670***

(PE-1683B-A FOR U.S.A.)

(PE-1683K-A FOR OTHER COUNTRIES)

Model ***RAX460D***

(PE-1684B-A FOR U.S.A.)

■SPECIFICATIONS

FM tuner section

Frequency range:	87.9MHz to 107.9MHz (PE-1683B/PE-1684B) 87.5MHz to 108.0MHz (PE-1683K)
Usable sensitivity:	11dBf
50dB quieting sensitivity:	17dBf
Alternate channel selectivity:	75dB
Stereo separation:	More than 35dB(1kHz)
Frequency response:	30Hz to 15kHz(±3dB)

AM tuner section

Frequency range:	530kHz to 1710kHz (PE-1683B/PE-1684B) 531kHz to 1602kHz (PE-1683K)
Usable sensitivity:	25 μ V

Tape deck section

Wow & flutter:	0.08%(WRMS)
Channel separation:	45dB(1kHz)
Frequency response(±3dB)	
120 μ s(normal):	30Hz to 18kHz
70 μ s(CrO2,FeCr,Metal):	30Hz to 20kHz
Signal to nolso ratio 70 μ s(CrO2,FeCr,Metal):	58dB
FF/REW time:	110ec.(c-60)

Audio section

Maximum power output:	180W(45W×4ch)
Continuous average power output:	16W×4,into 4Ω ,20Hz to 20kHz, 1%THD
Bass control action:	±13dB(30Hz)
Treble control action:	±10dB(10kHz)
Line output(TAPE):	1.8V

General

Power supply voltage:	14.4V DC(10.8V to 15.6V allowable), negative ground
Current consumption:	Less than 15A
Speaker impedance:	4Ω(4Ω to 8Ω allowable)
Weight:	Source unit 1.6kg
Dimensions(mm):	Source unit 178(W)×50(H)×155(D)

※Specifications comply with EIA Standards.
※Specifications and design are subject to change without notice for further improvement.

■NOTE

※We cannot supply PWB with component parts in principle. When a circuit on PWB has failure, please repair it by component parts base. Parts which are not mentioned in service manual are not supplied.

■ COMPONENTS

PE-1683B-A/PE-1683K-A/PE-1684B-A

Main unit	————	1
Remote controller	RCB-130-600	1
Mounting bracket	300-7742-00	1
DCP cass	335-5734-30	1
Extension lead	854-6349-57	1
Part's bag	————	
Removal tool	331-2497-00	2
Lead holder	335-0833-07	1
Screw	716-0496-01	1

■ FEATURES

1. DIN Chassis with Detachable Control Panel
2. Z-Enhancer with 3 Mode Sound Selector
3. AM/FM Bands - 1AM, 3FM/18FM/6AM Touch button Memory
4. Full Logic Tape Transport with True Function
5. Hard Permaloy Head(PE-1683K)
6. Auto Reverse with Azimuth Adjust
7. Auto Metal Tape EQ
8. Multi-Color LC Display
9. 2-Channel RCA Line Level Output with Fader Control
10. 180W(45W×4)Maximum Power Output
11. IR-Remote Control Capability

■ To engineers in charge of repair or inspection of our products.

Before repair or inspection, make sure to follow the instructions so that customers and Engineers in charge of repair or inspection can avoid suffering any risk or injury.

1. Use specified parts.
   The system uses parts with special safety features against fire and voltage. Use only parts with equivalent characteristics when replacing them.
   The use of unspecified parts shall be regarded as remodeling for which we shall not be liable. The onus of product liability (PL) shall not be our responsibility in cases where an accident or failure is as a result of unspecified parts being used.
2. Place the parts and wiring back in their original positions after replacement or re-wiring.
   For proper circuit construction, use of insulationtubes, bonding, gaps to PWB, etc, is involved. The wiring connection and routing to the PWB are specially planned using clamps to keep away from heated and high voltage parts. Ensure that they are placed back in their original positions after repair or inspection.
   If extended damage is caused due to negligence during repair, the legal responsibility shall be with the repairing company.
3. Check for safety after repair.
   Check that the screws, parts and wires are put back securely in their original position after repair. Ensure for safety reasons there is no possibility of secondary ploblems around the repaired spots.
   If extended damage is caused due to negligence of repair, the legal responsibility shall be with the repairing company.
4. Caution in removal and making wiring connection to the parts for the automobile.
   Disconnect the battery terminal after turning the ignition key off. If wrong wiring connections are made with the battery connected, a short circuit and/or fire may occur. If extensive damage is caused due to negligence of repair, the legal responsibility shall be with the repairing company.
5. Cautions regarding chips.
   Do not reuse removed chips even when no abnormality is observed in their appearance. Always replace them with new ones. (The chip parts include resistors, capacitors, diodes, transistors, etc). The negative pole of tantalum capacitors is highly susceptible to heat, so use special care when replacing them and check the operation afterwards.
6. Cautions in handing flexible PWB
   Before working with a soldering iron, make sure that the iron tip temperature is around 270℃. Take care not to apply the iron tip repeatedly (more than three times) to the same patterns. Also take care not to apply the tip with force.
7. Turn the unit OFF during disassembly and parts replacement. Recheck all work before you apply power to the unit.

■ CHANGING THE RECEPTION AREA

Model PE-1683B/PE-1684B (U.S.model) is initially set to U.S.A. frequency intervals of 10kHz for AM and 200kHz for FM deviation. When using the player outside the U.S.A., the frequency reception range can switch to the intervals below:

		Initial setting (U.S. standard)	New setting (outside U.S.)
AM	Frequency intervals	10kHz	9kHz
	Frequency range	530 to 1710kHz	531 to 1629kHz
FM	Frequency intervals	200kHz	50kHz
	Frequency range	87.9 to 107.9MHz	87.5 to 108MHz

Setting the reception area

1. Press the FNC button and select the desired radio mode (FM or AM).
2. Pressing the RDM button, add the 1 button less than using the 2sec to change the area from inside the U.S. to outside the U.S. One more press RDM button. Add the 1 button less than 2sec to change the area from outside the U.S. to inside the U.S.

■ TROUBLESHOOTING

Problem	Cause	Measure
Power dose not turn on. (or no sound is produced.)	Fuse is blown.	Replace with a fuse of the same amperage as the old fuse.
	Connections are improper.	Read the attached "Installation/Wire Connection Guide" once again and wire properly.
Sound quality is poor.	Playback head is dirty.	Use a cleaning tape, etc. to clean the head.
No sound while unit can be operated.	Power ANT lead is shorted to the ground.	Turn the unit off. first. Remove all connecting wires from the power ANT lead, and turn the unit on, then re-connect a wire one by one to the power ANT lead. When sound is muted again, check the unit with a wire connected last.

■ ERROR DISPLAYS

This unit is equipped with a number of self-diagnosis functions to protect the system. If a problem should occur, the user is warned through various error displays. Eliminate the problem using the procedures shown below.

Error Display	Cause	Procedure
Er 1	The cassette tape does not play normally due to tape cut.	Eject the cassette tape.
Er 2	The cassette tape does not play normally due to tape jam.	Remove the cassette tape which has been jammed or gotten caught in the mechanism.
Er 4	The mode detection switch is not normally activated due to mechanism failure.	Repair the mechanism or replace it.
Er 8	The cassette tape is jammed and cannot be ejected due to some reason.	Remove the jammed tape.

If a display other than one of the displays above appears, press the reset button. If the problem persists, turn the power off and contact your store of purchase.

■ ADJUSTMENT

Tape mechanism section 930-4310-00

Item	Procedure	Measuring instrument
Tape speed	1.Insert a wow speed tape and adjust speed-VR of main motor so that a reading of wow flutter meter is 3000----3090Hz.	Wow speed tape Wow flutter meter

■BLOCK DIAGRAM

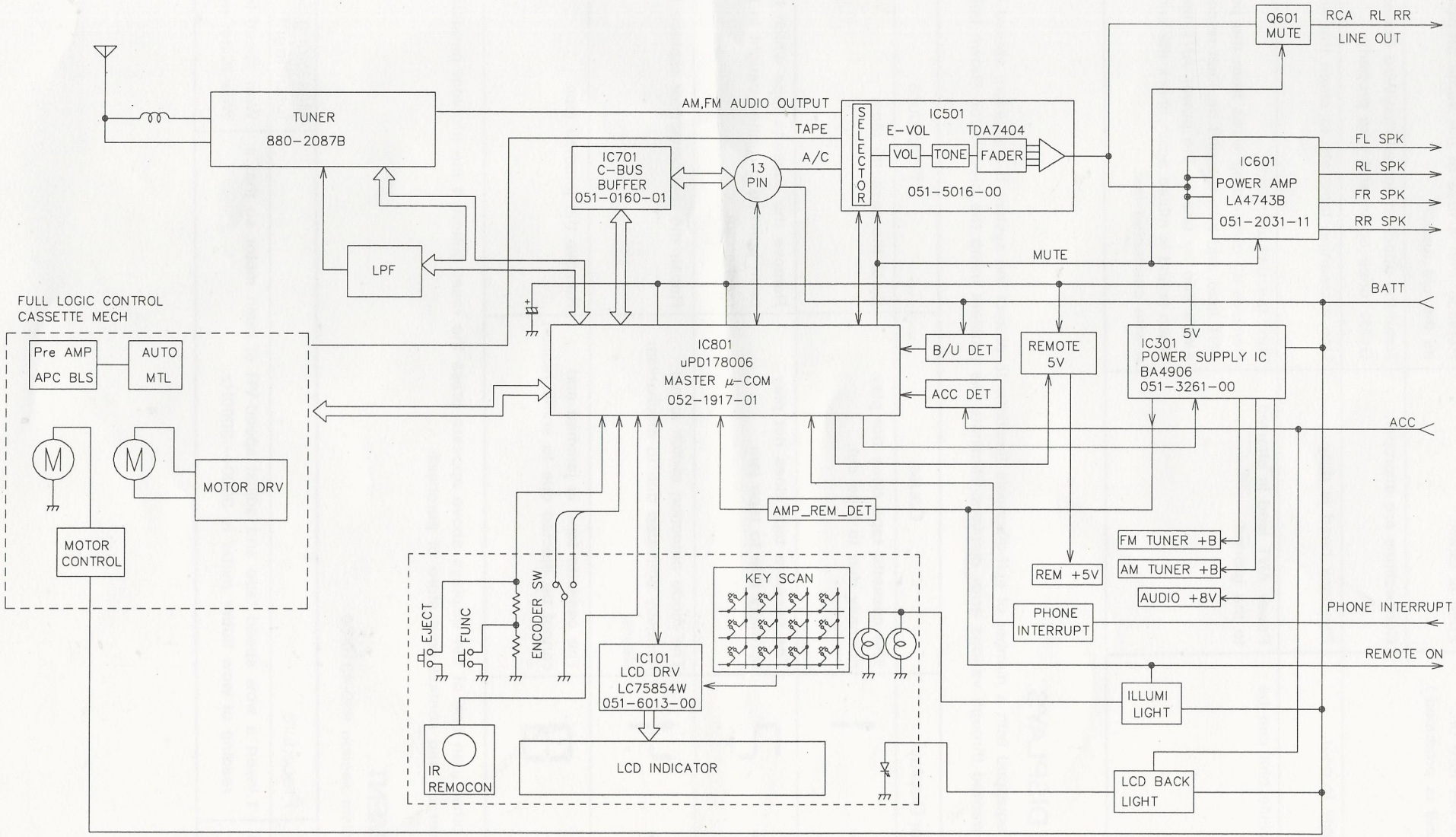

■ EXPLANATION OF IC:

■UPD178006AGC-535-3B9 052-1917-01 MASTER MICRO COMPUTER

1.Outward Form : 80 pins QFP
2.Terminal Description

pin 1 : KEY AD : IN : Detects FUNC/EJECT/DCP KEY
pin 2 : RDS S-METER : IN : RDS S-METER Detection terminal
pin 3 : RDS NOISE : IN : RDS NOISE Detection terminal
pin 4 : VOL CW : IN : Rotary VR input terminal (R)
pin 5 : VOL CCW : IN : Rotary VR input terminal (L)
pin 6 : NOISE DISCHG : O : NC
pin 7 : LCD SI : IN : Serial data communication line to LCD control IC
pin 8 : LCD SO : O : Serial data communication line to LCD control IC
pin 9 : LCD SCK : O : Serial data communication line to LCD control IC
pin 10 : LCD CE : O : LCD chip enable
pin 11 : C-BUS $\overline{SRQ}$: IN : "C-BUS" service request singal input terminal
pin 12 : C-BUS SI : IN : "C-BUS" serial data communication line
pin 13 : C-BUS SO : O : "C-BUS" serial data communication line
pin 14 : C-BUS SCK : O : "C-BUS" serial data communication line
pin 15 : BLINK LED : O : BLINK LEN
pin 16 : SYS MUTE : O : Outputs SYSTEM MUTE signal
pin 17 : REM +5V : O : 5V power supply control terminal
pin 18 : STAND BY : O : Power supply IC(BA4906) control terminal
pin 19 : E_VOL CLK : O : Serial data communication line to E-VOL IC
pin 20 : E_VOL DATA : O : Serial data communication line to E-VOL IC
pin 21 : GND : — : GND
pin 22 : VDD : — : Power supply terminal
pin 23 : MODE1. FM/AM : O : " HI "=FM, " LO"=AM power on
pin 24 : MODE2 ANT : O : " HI "=ANT power on
pin 25 : MUTE SPEED : O : NC
pin 26 : IF REQ : O : " HI "=SEEK, " LO"=RDS SD judge
pin 27 : ST : O : NC
pin 28 : AM IF CNT : IN : Inputs AM IF signal
pin 29 : FM IF CNT : IN : Inputs FM IF signal
pin 30 : VDD : — : Power supply terminal
pin 31 : FM OSC : IN : Inputs FM local oscillation frequency
pin 32 : AM OSC : IN : Inputs AM local oscillation frequency
pin 33 : GND : — : GND
pin 34 : FM-VT : O : NC
pin 35 : AM-VT : O : AM/FM PLL ANT
pin 36 : GND(IC) : — : GND
pin 37 : U/K : IN : Initial set-up terminal. " LO "USA, " HI "3rd
pin 38 : J/U : IN : Initial set-up terminal. " LO "USA, " HI "JAPAN
pin 39 : SD/ST-IND : IN : AM/FM SD IN, " LO "=FM ST
pin 40 : RDS MUTE : O : NC
pin 41 : AM $\overline{DX}$/LO : O : AM DX/LO output terminal, " HI " =LOCAL
pin 42 : AMP REM-DET : IN : REM voltage detection terminal
pin 43 : SLAVE ON : IN : Remote IN connunication terninal SLAVE ON " LO "
pin 44 : MASTER ON : O : Remote OUT connunication terninal MASTER ON " HI "
pin 45 : AUTO-ANT : O : MOTOR ANT control terminal
pin 46 : FM $\overline{DX}$/LO : O : FM DX/LO output terminal, " HI " =LOCAL
pin 47 : M-MOTOR : O : Outputs signal terminal for MECH MOTOR
pin 48 : MECH-ON : O : Outputs mechanism ON signal
pin 49 : PHONE AUDIO : IN : GND
pin 50 : NC : IN : GND
pin 51 : REEL-PULSE : IN : Inputs Reel pulse signal input
pin 52 : NC : IN : GND
pin 53 : STAND-BY-SW : IN : STAND BY POSITION SW
pin 54 : MODE-SW : IN : MODE SW
pin 55 : NC : IN : GND
pin 56 : TAPE-IN : IN : Tape loading start detection terminal
pin 57 : APC-SENS(MUTE) : O : Outputs APC sensitivity switching signal Outputs LOW in play
pin 58 : APC-DET : IN : Inputs " HI " in playing unrecorded part
pin 59 : NC : IN : GND
pin 60 : $\overline{FWD}$/REV : O : Outputs LOW in FORWARD
pin 61 : P2 : O : Outputs for cassette mechanism
pin 62 : P1 : O : Outputs motors forward/reverse control
pin 63 : BNR-B/C : O : NC
pin 64 : BNR-ON : IN : GND
pin 65 : L/M : O : NC
pin 66 : RDS DATA : IN : NC
pin 67 : RDS CLK : IN : NC
pin 68 : B/U DET : IN : Detects BACK UP
pin 69 : ACC DET : IN : ON/OFF detection terminal for ACC power supply
pin 70 : REMOCON : IN : IR REMOCON input
pin 71 : KEY-INT : IN : DCP SW detects terminal
pin 72 : NC : IN : GND
pin 73 : PHONE-INT : IN : Input terminal for phone interrupt/cellular
pin 74 : CPU-REG : — :
pin 75 : GND : — : GND
pin 76 : X-OUT : O : Connecting terminal for oscillating crystal for main system clock
pin 77 : X-IN : IN : Connecting terminal for oscillating crystal for main system clock
pin 78 : OSC-REG : — :
pin 79 : VDD : — : Power supply terminal
pin 80 : RESET : IN : Input reset signal

TO CONVERT TO MIC/PA INPUT.

USE OWN MIC P/A MODULE & LINK IN VIA DPDT RELAY

TO RADIO INPUT - REMOVE LINKS (P14/15 FROM TUNER)

ACCS in display - check 4 leaks between pin 42 & 43.

DRB 3675.

■ EXPLODED VIEW · PARTS LIST:

● ARX4670(PE-1683B/PE-1683K)

DCP Section

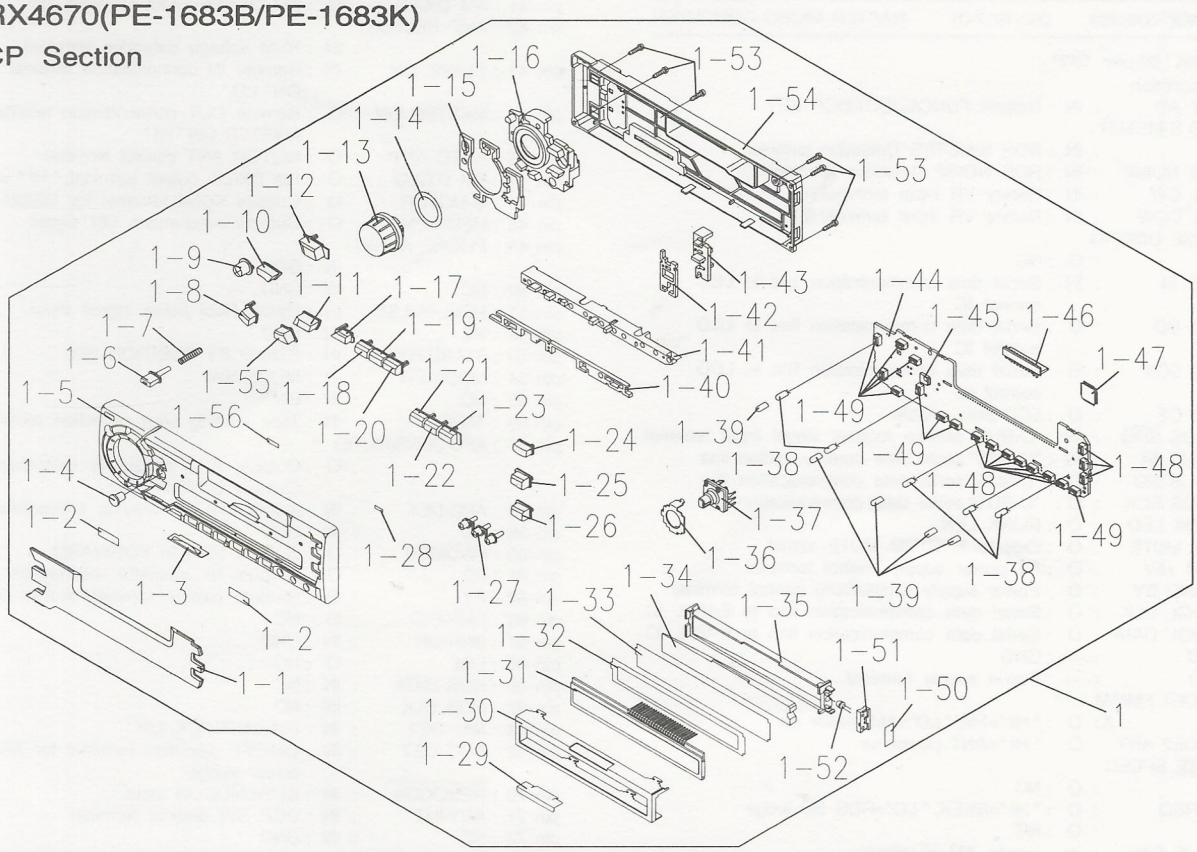

NO.	PARTS NO.	DESCRIPTION	Q'TY
1	DCP-210-600	DCP ASSY	1
1-1	373-0920-00	DIAL-CVR	1
1-2	347-6207-00	DOUBLE FACE	2
1-3	335-5926-00	ILLUMI.PLATE	1
1-4	335-5828-00	IR-FILTER	1
1-5	370-5858-00	ESCUTCHEON	1
1-6	382-5665-00	BUTTON	1
1-7	750-6699-00	SPRING	1
1-8	382-5650-00	BUTTON	1
1-9	382-5651-00	BUTTON	1
1-10	382-5652-00	BUTTON	1
1-11	382-5648-01	BUTTON	1
1-12	382-5647-00	BUTTON	1
1-13	380-5467-01	KNOB	1
1-14	347-6206-00	SHADE	1
1-15	345-8406-00	SPONGE(L)	1
1-16	335-6206-00	ILLUMI.PLATE(L)	1
1-17	382-5653-00	BUTTON	1
1-18	382-5654-00	BUTTON	1
1-19	382-5655-00	BUTTON	1
1-20	382-5656-00	BUTTON	1
1-21	382-5657-00	BUTTON	1
1-22	382-5658-00	BUTTON	1
1-23	382-5659-00	BUTTON	1
1-24	382-5662-00	BUTTON	1
1-25	382-5661-00	BUTTON	1
1-26	382-5660-00	BUTTON	1
1-27	382-5663-00	BUTTON	1
1-28	347-6192-00	SHADE(R)	1

NO.	PARTS NO.	DESCRIPTION	Q'TY
1-29	347-6230-00	SHADE	1
1-30	331-2810-00	LCD-CVR	1
1-31	379-1176-41	INDICATOR	1
1-32	347-6171-00	SHADE	1
1-33	347-6170-00	FILM	1
1-34	335-6214-00	LCD ILLUMI.	1
1-35	335-6210-00	LCD HOLDER	1
1-36	331-2814-00	JOG-SW HOLDER	1
1-37	016-9900-66	ROTARY ENCODER	1
1-38	017-0444-00	PILOT LAMP	5
1-39	345-4441-37	LAMP CAP	5
1-40	345-8405-00	SPONGE(M)	1
1-41	335-6205-00	ILLUMI.PLATE(M)	1
1-42	345-8404-00	SPONGE(R)	1
1-43	335-6204-00	ILLUMI.PLATE(R)	1
1-44	039-1623-00	SWITCH PWB (WITHOUT COMPONENT)	1
1-45	060-4008-00	IR-RECEIVE	1
1-46	076-0615-00	PLUG	1
1-47	051-6013-00	IC	1
1-48	013-6001-50	SWITCH	10
1-49	013-6305-50	SWITCH	9
1-50	347-6191-00	SHADE(LED)	1
1-51	335-6216-00	LED HOLDER	1
1-52	001-7046-00	DIODE	1
1-53	716-1721-00	P-TIGHT SCREW	6
1-54	335-6201-00	REAR-CVR	1
1-55	382-5649-00	BUTTON	1
1-56	347-6193-00	SHADE(L)	1

● RAX460D(PE-1684B)

DCP Section

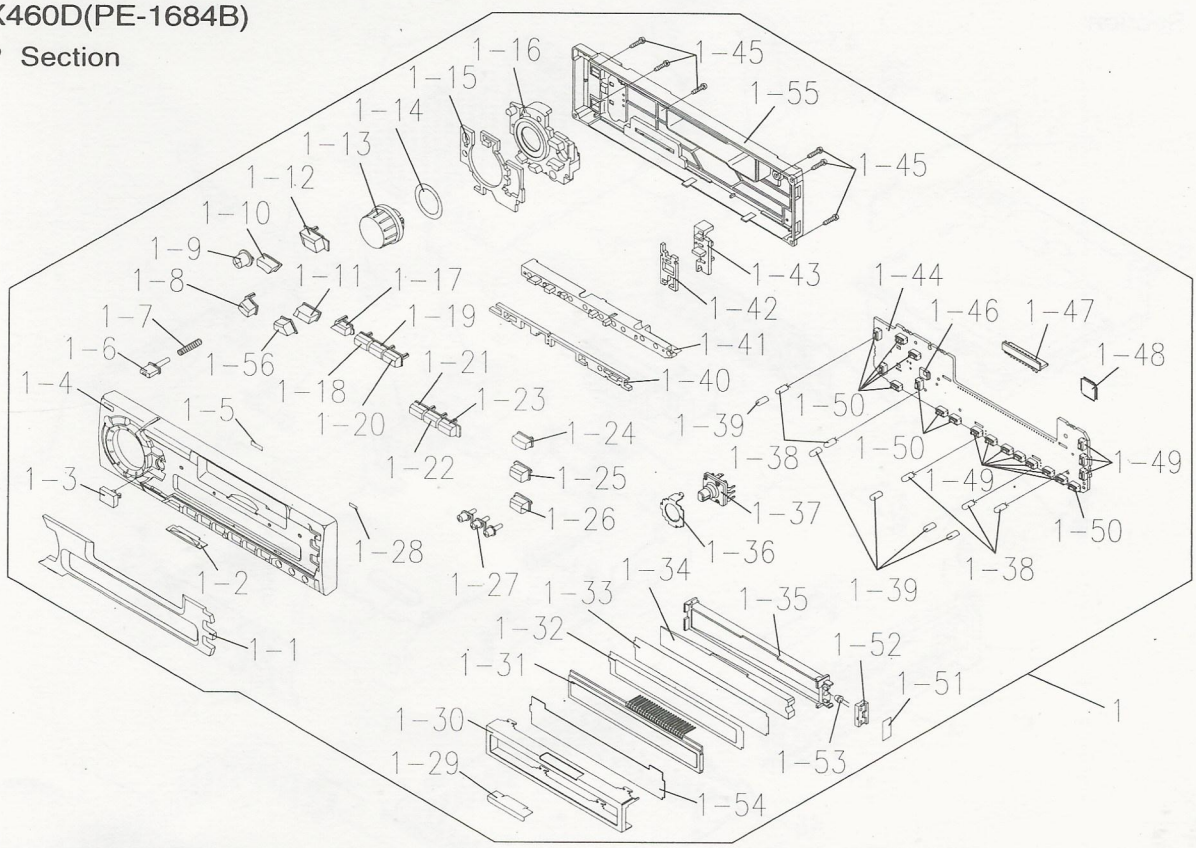

NO.	PARTS NO.	DESCRIPTION	QTY
1	DCP-209-600	DCP ASSY	1
1-1	373-0921-00	DIAL-CVR	1
1-2	335-5926-00	ILLUMI.PLATE	1
1-3	335-6203-00	IR-FILTER	1
1-4	370-5858-02	ESCUTCHEON	1
1-5	347-6193-00	SHADE(L)	1
1-6	382-5665-00	BUTTON	1
1-7	750-6699-00	SPRING	1
1-8	382-5650-00	BUTTON	1
1-9	382-5651-00	BUTTON	1
1-10	382-5652-00	BUTTON	1
1-11	382-5648-01	BUTTON	1
1-12	382-5647-00	BUTTON	1
1-13	380-5467-01	KNOB	1
1-14	347-6206-00	SHADE	1
1-15	345-8406-00	SPONGE(L)	1
1-16	335-6206-00	ILLUMI.PLATE(L)	1
1-17	382-5653-00	BUTTON	1
1-18	382-5654-00	BUTTON	1
1-19	382-5655-00	BUTTON	1
1-20	382-5656-00	BUTTON	1
1-21	382-5657-00	BUTTON	1
1-22	382-5658-00	BUTTON	1
1-23	382-5659-00	BUTTON	1
1-24	382-5662-00	BUTTON	1
1-25	382-5661-00	BUTTON	1
1-26	382-5660-00	BUTTON	1
1-27	382-5663-00	BUTTON	1
1-28	347-6192-00	SHADE(R)	1

NO.	PARTS NO.	DESCRIPTION	QTY
1-29	347-6230-00	SHADE	1
1-30	331-2810-00	LCD-CVR	1
1-31	379-1176-41	INDICATOR	1
1-32	347-6171-00	SHADE	1
1-33	347-6170-00	FILM	1
1-34	335-6214-00	LCD ILLUMI.	1
1-35	335-6210-00	LCD HOLDER	1
1-36	331-2814-00	JOG-SW HOLDER	1
1-37	016-9900-66	ROTARY ENCODER	1
1-38	017-0444-00	PILOT LAMP	5
1-39	345-4441-37	LAMP CAP	5
1-40	345-8405-00	SPONGE(M)	1
1-41	335-6205-00	ILLUMI.PLATE(M)	1
1-42	345-8404-00	SPONGE(R)	1
1-43	335-6204-00	ILLUMI.PLATE(R)	1
1-44	039-1623-00	SWITCH PWB (WITHOUT COMPONENT)	1
1-45	716-1721-00	P-TIGHT SCREW	6
1-46	060-4008-00	IR-RECEIVE	1
1-47	076-0615-00	PLUG	1
1-48	051-6013-00	IC	1
1-49	013-6001-50	SWITCH	10
1-50	013-6305-50	SWITCH	9
1-51	347-6191-00	SHADE(LED)	1
1-52	335-6216-00	LED HOLDER	1
1-53	001-7046-00	DIODE	1
1-54	347-6165-00	SURGE PROTECT	1
1-55	335-6201-00	REAR-CVR	1
1-56	382-5649-00	BUTTON	1

Main Section

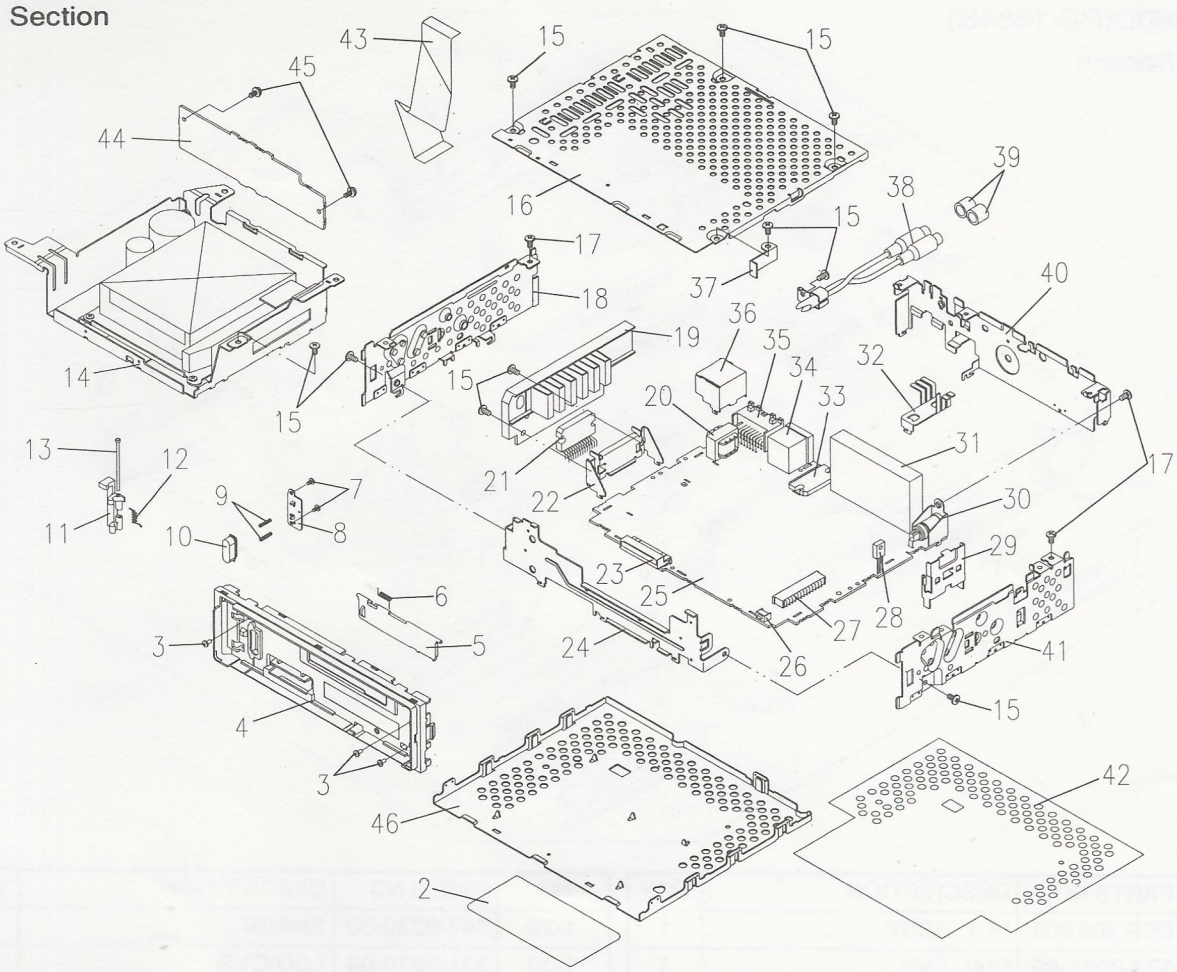

NO.	PARTS NO.	DESCRIPTION	QTY
2	286-9328-00	SETPLATE(PE-1683B)	1
	286-9382-00	SETPLATE(PE-1683K)	1
	286-9329-00	SETPLATE(PE-1684B)	1
3	780-2004-01	SCREW	3
4	370-5794-03	ESCUTCHEON(I)	1
5	320-0562-00	DUSTPROOF-CVR	1
6	750-3343-01	SPRING	1
7	716-0778-00	WAVE SCREW	2
8	331-2594-00	HOOK PLATE	1
9	750-3173-00	SPRING	2
10	382-4078-00	BUTTON	1
11	335-5915-01	HOOK	1
12	750-3219-00	SPRING	1
13	341-1627-00	SHAFT	1
14	930-4310-00	TAPE-MECH	1
15	731-3006-80	TAPTIGHT	10
16	303-0472-00	UPPER-CVR	1
17	714-3006-81	MACHINE SCREW	3
18	305-0274-00	SIDE-CVR(L)	1
19	313-1744-20	HEAT SINK	1
20	009-9006-50	CHOKE	1
21	051-2031-11	IC	1
22	331-2255-20	IC-HOLDER	1
23	074-1217-00	OUTLET SOCKET	1
24	309-0721-01	FRONT PLATE	1

NO.	PARTS NO.	DESCRIPTION	QTY
25	039-1613-00	MAIN PWB (WITHOUT COMPONENT)	1
26	013-6100-00	SWITCH	1
27	074-0986-22	OUTLET SOCKET	1
28	103-2012-00	TRANSISTOR	1
29	313-1651-20	HEAT SINK	1
30	092-9000-41	ANT RECEPT	1
31	880-2087B	TUNER	1
32	313-1772-00	HEAT SINK	1
33	051-3261-00	IC	1
34	074-1126-10	OUTLET SOCKET	1
35	074-1214-00	OUTLET SOCKET	1
36	331-2820-00	SHIELD CASE	1
37	331-2744-00	STOPPER	1
38	855-5426-52	RCA PIN CORD	1
39	345-3799-20	RUBBER CAP	2
40	307-0626-01	REAR-CVR	1
41	305-0275-00	SIDE-CVR(R)	1
42	347-5918-00	INSULATOR	1
43	816-2478-00	SPECIAL LEAD	1
44	039-1617-00	MECH PWB (WITHOUT COMPONENT)	1
45	716-0878-00	IT SCREW	2
46	304-0460-00	LOWER-CVR	1

■ ELECTRICAL PARTS LIST:

Main PWB (B1) section

REF No.	PART No.	DESCRIPTION
IC 301	051-3261-00	BA4906
IC 501	051-5016-90	TDA7404
IC 601	051-2031-11	TDA4743B
IC 701	051-0160-01	HD74LS07
IC 801	052-1917-01	uPD178006
Q 102	102-2712-51	2SC2712GL
Q 103	102-2712-51	2SC2712GL
Q 108	125-2004-03	RN1403
Q 301	102-2712-00	2SC2712
Q 303	125-2004-02	RN1402
Q 304	102-2712-00	2SC2712
Q 305	101-1237-00	2SB1237
Q 306	125-0002-02	RN2402
Q 307	125-0002-02	RN2402
Q 308	101-1243-00	2SB1243
Q 309	125-2004-02	RN1402
Q 310	103-1858-00	2SD1858
Q 402	125-0002-06	RN2406
Q 403	125-2004-06	RN1406
Q 404	125-2004-06	RN1406
Q 405	101-1243-00	2SB1243
Q 406	103-2012-00	2SD2012
Q 501	125-4001-00	XN1504
Q 601	125-0002-02	RN2402
Q 701	125-2004-02	RN1402
Q 702	100-1162-00	2SA1162
Q 703	125-2004-02	RN1402
Q 704	102-2712-00	2SC2712
Q 901	100-1162-00	2SA1162
D 301	001-0376-41	MTZ7.5JB
D 302	001-0376-26	MTZ4.7JB
D 303	001-0466-01	S5688G
D 305	001-0330-00	1SS119
D 306	001-0330-00	1SS119
D 307	001-0466-01	S5688G
D 309	001-0330-00	1SS119
D 310	001-0376-47	MTZ9.1JB
D 311	001-0330-00	1SS119
D 402	001-0376-47	MTZ9.1JB
D 601	001-0592-00	RM4Z
D 602	001-0466-01	S5688G
D 603	001-0466-01	S5688G
D 604	001-0466-01	S5688G
D 605	001-0466-01	S5688G
D 606	001-0466-01	S5688G
D 607	001-0466-01	S5688G
D 608	001-0466-01	S5688G
D 609	001-0466-01	S5688G
D 701	001-0330-00	1SS119
D 702	001-0330-00	1SS119
D 801	001-0330-00	1SS119
D 901	001-0330-00	1SS119

REF No.	PART No.	DESCRIPTION
L 101	010-4007-00	AM COIL
L 102	010-2230-14	2.2 μH
L 103	010-2230-31	56 μH
L 601	009-9006-50	CHOKE
L 701	010-2230-26	22 μH
L 801	010-2230-38	220 μH
X 801	061-1064-00	4.5MHz
C 101	176-1801-00	50V 18PF
C 102	178-1032-78	25V 0.01 μF
C 103	178-1032-78	25V 0.01 μF
C 105	183-1073-22	10V 100 μF
C 106	183-1073-22	10V 100 μF
C 107	183-1073-22	10V 100 μF
C 108	176-1011-00	50V 100PF
C 109	176-1011-00	50V 100PF
C 110	178-2232-78	25V 0.022 μF
C 111	176-1011-00	50V 100PF
C 112	176-3311-00	50V 330PF
C 114	183-1053-62	50V 1 μF
C 117	178-2732-78	25V 0.027 μF
C 118	178-2732-78	25V 0.027 μF
C 122	042-9002-01	50V 3.3 μF
C 123	178-1032-78	25V 0.01 μF
C 125	178-4722-78	50V 4700PF
C 126	178-6822-78	50V 6800PF
C 127	178-1032-78	25V 0.01 μF
C 128	178-1032-78	25V 0.01 μF
C 129	176-1007-00	50V 10PF
C 130	178-1032-78	25V 0.01 μF
C 302	172-1031-10	50V 0.01 μF
C 303	172-1031-10	50V 0.01 μF
C 305	183-1063-52	35V 10 μF
C 308	183-1063-52	35V 10 μF
C 309	177-1032-55	50V 0.01 μF
C 310	177-1032-55	50V 0.01 μF
C 311	177-1032-55	50V 0.01 μF
C 312	183-1063-32	16V 10 μF
C 403	183-1073-22	10V 100 μF
C 404	183-1063-52	35V 10 μF
C 501	178-1042-78	25V 0.1 μF
C 502	178-1042-78	25V 0.1 μF
C 503	183-1043-62	50V 0.1 μF
C 504	183-1043-62	50V 0.1 μF
C 505	183-1053-62	50V 1 μF
C 506	183-1053-62	50V 1 μF
C 509	183-4763-32	16V 47 μF
C 510	183-1063-52	35V 10 μF
C 511	183-1063-52	35V 10 μF
C 514	183-1063-52	35V 10 μF
C 515	178-1032-78	25V 0.01 μF
C 516	178-1022-78	50V 1000PF
C 517	178-2222-78	50V 2200PF

REF No.	PART No.	DESCRIPTION
C 518	178-2222-78	50V 2200PF
C 521	178-1022-78	50V 1000PF
C 522	176-4711-00	50V 470PF
C 523	176-4711-00	50V 470PF
C 601	172-2231-10	50V 0.022 μF
C 602	042-0447-00	16V 2200 μF
C 603	183-3353-62	50V 3.3 μF
C 604	183-2263-32	16V 22 μF
C 605	183-4763-32	16V 47 μF
C 606	182-4746-63	50V 0.47 μF
C 607	182-4746-63	50V 0.47 μF
C 608	182-4746-63	50V 0.47 μF
C 609	182-4746-63	50V 0.47 μF
C 611	172-1041-10	50V 0.1 μF
C 612	172-1041-10	50V 0.1 μF
C 613	172-1041-10	50V 0.1 μF
C 614	172-1041-10	50V 0.1 μF
C 615	173-1021-11	50V 1000PF
C 701	178-4732-78	25V 0.047 μF
C 801	176-2201-00	50V 22PF
C 802	176-2201-00	50V 22PF
C 803	178-4732-78	25V 0.047 μF
C 804	178-4732-78	25V 0.047 μF
C 805	178-1032-78	25V 0.01 μF
C 806	182-4763-33	16V 47 μF
C 807	183-1073-12	6.3V 100 μF
C 808	178-1032-78	25V 0.01 μF
C 809	178-1032-78	25V 0.01 μF
C 810	178-1042-78	25V 0.1 μF
C 811	178-4732-78	25V 0.047 μF
C 813	178-1022-78	50V 1000PF
C 814	177-1022-55	50V 1000PF
R 101	117-2221-10	1/10W 2.2KΩ
R 103	117-2221-10	1/10W 2.2KΩ
R 105	117-1021-10	1/10W 1KΩ
R 106	117-1231-10	1/10W 12KΩ
R 111	117-4721-10	1/10W 4.7KΩ
R 115	117-1021-10	1/10W 1KΩ
R 116	117-1021-10	1/10W 1KΩ
R 120	117-5631-10	1/10W 56KΩ
R 121	117-4741-10	1/10W 470KΩ
R 122	117-1011-10	1/10W 100Ω
R 206	117-1041-10	1/10W 100KΩ
R 301	117-4731-10	1/10W 47KΩ
R 302	117-2231-10	1/10W 22KΩ
R 303	117-2231-10	1/10W 22KΩ
R 304	117-4721-10	1/10W 4.7KΩ
R 305	117-2231-10	1/10W 22KΩ
R 307	117-4721-10	1/10W 4.7KΩ
R 308	111-3321-91	1/4WSS 3.3KΩ
R 309	117-1031-10	1/10W 10KΩ
R 310	111-5611-81	1/2WS 560Ω

REF No.	PART No.	DESCRIPTION
R 311	117-1031-10	1/10W 10KΩ
R 312	117-1031-10	1/10W 10KΩ
R 313	117-4721-10	1/10W 4.7KΩ
R 314	111-4711-91	1/4WSS 470Ω
R 318	117-1031-10	1/10W 10KΩ
R 401	117-4731-10	1/10W 47KΩ
R 402	117-1041-10	1/10W 100KΩ
R 403	117-4731-10	1/10W 47KΩ
R 405	117-1041-10	1/10W 100KΩ
R 406	111-2211-91	1/4WSS 220Ω
R 411	111-1221-91	1/4WSS 1.2KΩ
R 412	117-4731-10	1/10W 47KΩ
R 413	117-1041-10	1/10W 100KΩ
R 415	117-1041-10	1/10W 100KΩ
R 501	117-4721-10	1/10W 4.7KΩ
R 502	117-4721-10	1/10W 4.7KΩ
R 503	117-1021-10	1/10W 1KΩ
R 504	117-1021-10	1/10W 1KΩ
R 505	117-1031-10	1/10W 10KΩ
R 506	117-1031-10	1/10W 10KΩ
R 507	117-3311-10	1/10W 330Ω
R 508	117-3311-10	1/10W 330Ω
R 515	111-4721-91	1/4WSS 4.7KΩ
R 516	111-4721-91	1/4WSS 4.7KΩ
R 517	111-4721-91	1/4WSS 4.7KΩ
R 518	111-4721-91	1/4WSS 4.7KΩ

REF No.	PART No.	DESCRIPTION
R 519	111-4721-91	1/4WSS 4.7KΩ
R 520	111-4721-91	1/4WSS 4.7KΩ
R 524	111-1031-91	1/4WSS 10KΩ
R 602	117-1031-10	1/10W 10KΩ
R 604	117-1231-10	1/10W 12KΩ
R 605	116-4721-10	1/8W 4.7KΩ
R 606	111-4721-91	1/4WSS 4.7KΩ
R 607	111-4721-91	1/4WSS 4.7KΩ
R 608	116-4721-10	1/8W 4.7KΩ
R 609	117-4721-10	1/10W 4.7KΩ
R 701	117-4721-10	1/10W 4.7KΩ
R 702	117-4721-10	1/10W 4.7KΩ
R 703	117-1021-10	1/10W 1KΩ
R 704	117-4721-10	1/10W 4.7KΩ
R 705	117-1021-10	1/10W 1KΩ
R 706	117-4721-10	1/10W 4.7KΩ
R 707	117-1021-10	1/10W 1KΩ
R 709	117-1031-10	1/10W 10KΩ
R 710	116-1021-10	1/8W 1KΩ
R 711	117-4731-10	1/10W 47KΩ
R 712	117-2231-10	1/10W 22KΩ
R 713	117-2231-10	1/10W 22KΩ
R 714	117-1031-10	1/10W 10KΩ
R 715	117-2231-10	1/10W 22KΩ
R 803	117-1031-10	1/10W 10KΩ
R 810	117-2231-10	1/10W 22KΩ

REF No.	PART No.	DESCRIPTION
R 812	117-2221-10	1/10W 2.2KΩ
R 813	117-2221-10	1/10W 2.2KΩ
R 818	111-4731-91	1/4WSS 47KΩ
R 819	117-1041-10	1/10W 100KΩ
R 820	117-1041-10	1/10W 100KΩ
R 821	111-1031-91	1/4WSS 10KΩ
R 822	111-1031-91	1/4WSS 10KΩ
		(PE-1683K)
R 823	111-1031-91	1/4WSS 10KΩ
		(PE-1683B)
		(PE-1684B)
R 825	117-1031-10	1/10W 10KΩ
R 826	117-1031-10	1/10W 10KΩ
R 827	111-2231-91	1/4WSS 22KΩ
R 830	117-1031-10	1/10W 10KΩ
R 831	117-4731-10	1/10W 47KΩ
R 832	117-4731-10	1/10W 47KΩ
R 901	117-1031-10	1/10W 10KΩ
R 902	117-4721-10	1/10W 4.7KΩ
R 903	117-4731-10	1/10W 47KΩ
SUP101	060-0122-20	DSP-414N
CN 101	074-1217-00	OUTLET SOCKET
CN 102	074-1214-00	OUTLET SOCKET
CN 105	074-1126-10	OUTLET SOCKET
CN 106	074-0986-22	OUTLET SOCKET
S 301	013-6100-00	SKHILLB(RESET)

Switch PWB (B2) section

REF No.	PART No.	DESCRIPTION
IC 101	051-6013-00	LC75854W
Q 101	100-1162-00	2SA1162
D 101	001-0529-29	MA8051M
D 102	001-0529-14	MA8030L
D 103	001-0529-41	MA8075M
D 104	001-7046-00	NSPW310BS
C 101	178-4732-78	25V 0.047 μF
C 102	178-4732-78	25V 0.047 μF
C 103	178-1022-78	50V 1000PF
C 104	042-0416-51	6.3V 10 μF
C 105	042-0416-51	6.3V 10 μF
R 101	117-2221-10	1/10W 2.2KΩ
R 102	117-2221-10	1/10W 2.2KΩ
R 103	117-2221-10	1/10W 2.2KΩ
R 104	117-4731-10	1/10W 47KΩ
R 105	117-1031-10	1/10W 10KΩ
R 106	117-3311-10	1/10W 330Ω
R 107	117-3921-10	1/10W 3.9KΩ

REF No.	PART No.	DESCRIPTION
R 108	117-1241-10	1/10W 120KΩ
R 109	117-1011-10	1/10W 100Ω
R 110	117-1011-10	1/10W 100Ω
R 111	117-2731-10	1/10W 27KΩ
R 112	032-0092-80	1/10W 330Ω 1%
R 113	032-0092-80	1/10W 330Ω 1%
R 114	117-1021-10	1/10W 1KΩ
R 115	117-1011-10	1/10W 100Ω
CN 101	076-0615-00	PLUG
PL 101	017-0444-00	14V 50MA
PL 102	017-0444-00	14V 50MA
PL 103	017-0444-00	14V 50MA
PL 104	017-0444-00	14V 50MA
PL 105	017-0444-00	14V 50MA
S 101	013-6001-50	SKQCAB
S 102	013-6305-00	SKQMAH
S 103	013-6305-00	SKQMAH
S 104	013-6001-50	SKQCAB

REF No.	PART No.	DESCRIPTION
S 105	013-6001-50	SKQCAB
S 106	013-6001-50	SKQCAB
S 107	013-6305-00	SKQMAH
S 108	013-6001-50	SKQCAB
S 109	013-6001-50	SKQCAB
S 110	013-6001-50	SKQCAB
S 111	013-6305-00	SKQMAH
S 112	013-6305-00	SKQMAH
S 113	013-6305-00	SKQMAH
S 114	013-6001-50	SKQCAB
S 115	013-6001-50	SKQCAB
S 116	013-6305-00	SKQMAH
S 117	013-6305-00	SKQMAH
S 118	016-9900-66	SIM-026MT
S 119	013-6001-50	SKQCAB
S 120	013-6305-00	SKQMAH
IR 101	060-4008-00	RS-171

MECH PWB (B3) section

REF No.	PART No.	DESCRIPTION
IC 1	051-6048-08	BA6219BFP
IC 2	051-1546-90	BA3430FS
Q 1	102-2412-00	2SC2412
D 1	001-0529-25	MA8047L
C 1	178-1042-78	25V 0.1 μF
C 2	178-2242-78	25V 0.22 μF
C 3	183-4763-32	16V 47 μF
C 4	176-3311-00	50V 330PF
C 5	176-3311-00	50V 330PF
C 6	176-3311-00	50V 330PF
C 7	176-3311-00	50V 330PF
C 8	183-6863-22	10V 68 μF
C 9	183-6863-22	10V 68 μF
C 10	172-1231-10	50V 0.012 μF
C 11	172-1231-10	50V 0.012 μF
C 12	183-4763-32	16V 47 μF
C 13	183-4753-52	35V 4.7 μF
C 14	183-4753-52	35V 4.7 μF
C 15	176-5611-00	50V 560PF

REF No.	PART No.	DESCRIPTION
C 16	183-1043-62	50V 0.1 μF
C 17	183-4753-52	35V 4.7 μF
C 18	183-4743-62	50V 0.47 μF
C 19	183-2263-32	16V 22 μF
C 20	178-1042-78	25V 0.1 μF
C 21	178-1042-78	25V 0.1 μF
C 22	178-2242-78	25V 0.22 μF
C 23	178-2242-78	25V 0.22 μF
R 1	117-2221-10	1/10W 2.2KΩ
R 10	117-1241-10	1/10W 120KΩ
R 11	117-1241-10	1/10W 120KΩ
R 12	117-1241-10	1/10W 120KΩ
R 13	117-1011-10	1/10W 100Ω
R 14	117-1011-10	1/10W 100Ω
R 15	117-3341-10	1/10W 330KΩ
R 16	117-3341-10	1/10W 330KΩ
R 17	117-1131-10	1/10W 11KΩ
R 18	117-1131-10	1/10W 11KΩ
R 19	117-1531-10	1/10W 15KΩ

REF No.	PART No.	DESCRIPTION
R 2	117-2231-10	1/10W 22KΩ
R 20	117-1531-10	1/10W 15KΩ
R 21	117-1031-10	1/10W 10KΩ
R 22	117-1031-10	1/10W 10KΩ
R 23	117-8211-10	1/10W 820Ω
R 24	117-1811-10	1/10W 180Ω
R 25	117-2231-10	1/10W 22KΩ
R 26	117-3391-10	1/10W 3.3Ω
R 27	117-3301-10	1/10W 33Ω
R 3	117-2231-10	1/10W 22KΩ
R 4	117-6831-10	1/10W 68KΩ
R 5	117-5631-10	1/10W 56KΩ
R 6	117-3311-10	1/10W 330Ω
R 7	117-2221-10	1/10W 2.2KΩ
R 8	114-1001-21	2WSS 10Ω
R 9	117-1241-10	1/10W 120KΩ
CN 1	074-0986-11	OUTLET SOCKET
CN 2	076-0351-06	PLUG

■ ELECTRICAL PARTS LIST

Tape mechanism section 930-4310-00

Note)Several different parts of the same reference number are alternative parts.
One of those parts is used in the set.

REEL PWB (B4) section

REF No.	PART No.	DESCRIPTION
Q 1	658-0223-52	ON2170-QR
S 1	658-0223-51	SPPB 64

REF No.	PART No.	DESCRIPTION
S 2	658-0223-50	ESE22MH2L
S 3	658-0223-50	ESE22MH2L

REF No.	PART No.	DESCRIPTION
S 4	658-0223-51	SPPB 64
	658-0223-53	FLAT CABLE 11P

HEAD PWB (B5) section

REF No.	PART No.	DESCRIPTION
J 1	658-0223-56	JOINT WIRE ASSY 6P

■ EXPLODED VIEW · PARTS LIST:

Tape mechanism section 930-4310-00

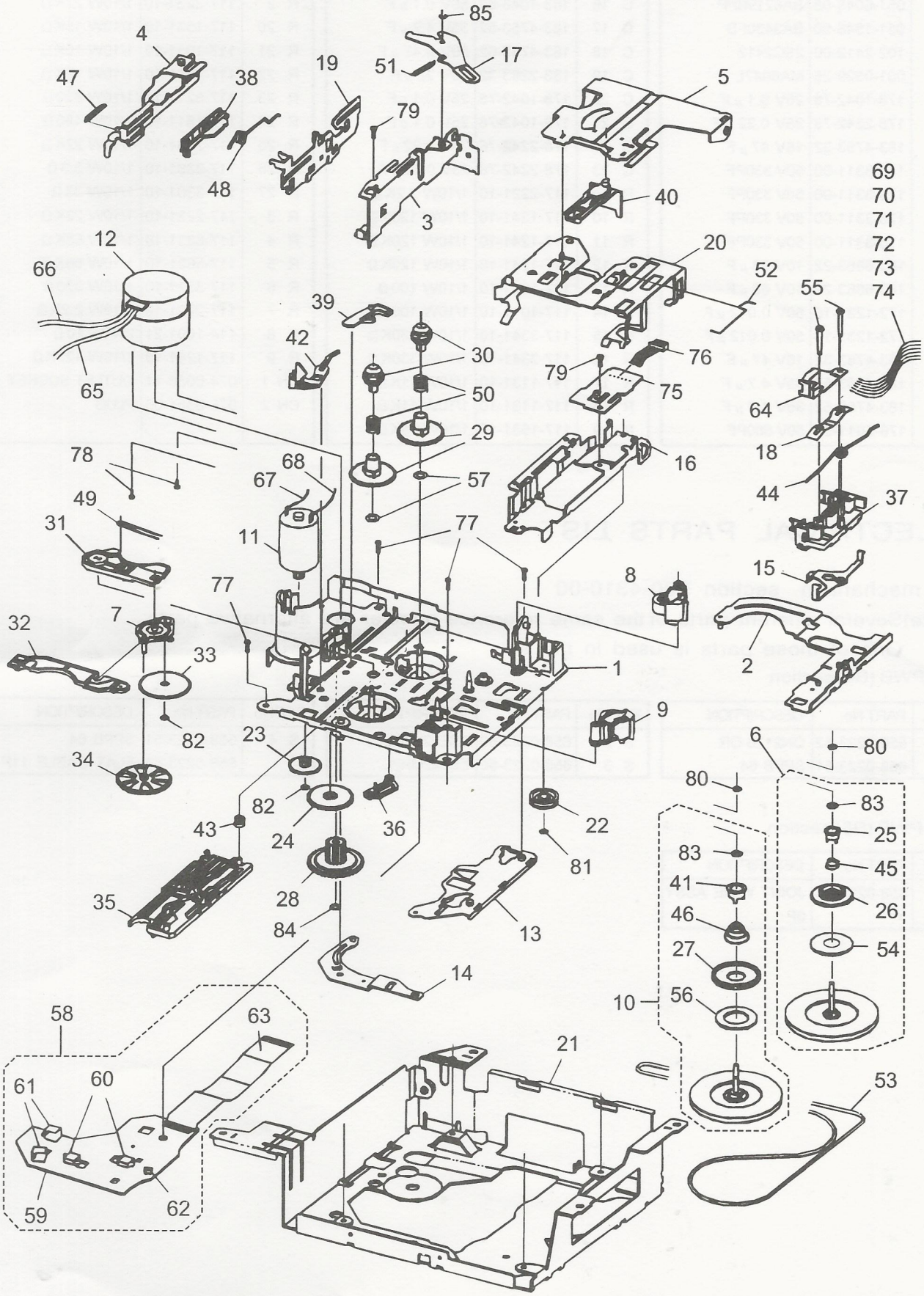

NO.	PARTS NO.	DESCRIPTION	Q'TY
1	— — —	MAIN CHASSIS ASSY	1
2	658-0223-01	SLIDE CHASSIS ASSY	1
3	658-0223-02	SIDE BKT ASSY	1
4	658-0223-03	EJECT CAM LIMITER ASSY	1
5	658-0223-04	CASSETTE HANGER ASSY	1
6	658-0223-05	FLYWHEEL ASSY F	1
7	658-0223-06	GEAR BASE ASSY	1
8	658-0223-07	PINCH ARM F ASSY	1
9	658-0223-08	PINCH ARM R ASSY	1
10	658-0223-09	FLYWHEEL ASSY R	1
11	658-0223-10	SUB MOTOR ASSY	1
12	658-0223-11	MAIN MOTOR ASSY	1
13	658-0223-12	DIRECTION PLATE	1
14	658-0223-13	DIRECTION LINK	1
15	658-0223-14	PINCH SPG ARM	1
16	658-0223-15	CASSETTE GUIDE	1
17	658-0223-16	LOAD ARM	1
18	658-0223-17	HEAD SUPPORT SPG	1
19	658-0223-18	EJECT CAM PLATE	1
20	658-0223-19	CASSETTE HOLDER	1
21	658-0223-20	BOTTOM PLATE	1
22	658-0223-21	IDLE PULLEY(A1)	1
23	658-0223-22	REDUCTION GEAR A	1
24	658-0223-23	REDUCTION GEAR B	1
25	— — —	SPG HOLDER F	1
26	— — —	FRICTION GEAR PLAY	1
27	— — —	FRICTION GEAR FF	1
28	658-0223-24	MODE GEAR	1
29	658-0223-25	REEL SPINDLE	2
30	658-0223-26	REEL DRIVER	2
31	658-0223-27	GEAR BASE ARM	1
32	658-0223-28	GEAR BASE LINK	1
33	658-0223-29	TAKE UP GEAR	1
34	658-0223-30	REFLECTOR GEAR	1
35	658-0223-31	MODE RACK	1
36	658-0223-32	MODE SW ACTUATER	1
37	658-0223-33	TAPE GUIDE	1
38	658-0223-34	LOAD RACK	1
39	658-0223-35	RACK LINK	1
40	658-0223-36	CASSETTE CATCH	1
41	— — —	SPG HOLDER R	1
42	658-0223-37	TAPE DETECTOR	1
43	658-0223-38	RACK COLLAR	1
44	658-0223-39	PINCH ARM SPG	1
45	— — —	TU SPG	1

NO.	PARTS NO.	DESCRIPTION	Q'TY
46	— — —	FF SPG	1
47	658-0223-40	EJECT CAM PLATE SPG	1
48	658-0223-41	HOLDER CUSHION SPG	1
49	658-0223-42	GEAR BASE SPG	1
50	658-0223-43	REEL DRIVER SPG	2
51	658-0223-44	LOAD ARM SPG	1
52	658-0223-45	HOLDER STABILIZER SPG	1
53	658-0223-46	BELT	1
54	— — —	FELT	1
55	658-0223-47	AZIMUTH SCREW	2
56	— — —	FELT	1
57	658-0223-48	REEL WASHER	2
58	— — —	REEL PWB ASSY (WITH COMPONENT)	1
59	658-0223-49	REEL PWB (WITHOUT COMPONENT)	1
60	658-0223-50	SW (ESE22MH2L)	2
61	658-0223-51	SW (SPPB 64)	2
62	658-0223-52	PHOTO SENSOR (ON2170-QR FS)	1
63	658-0223-53	FLAT CABLE 11P-C	1
64	658-0223-54	HEAD (P-5544-CD)	1
65	— — —	MAIN MOTOR WIRE BLACK	1
66	— — —	MAIN MOTOR WIRE RED	1
67	— — —	SUB MOTOR WIRE ORANGE	1
68	— — —	SUB MOTOR WIRE BROWN	1
69	— — —	HEAD WIRE BLACK	1
70	— — —	HEAD WIRE BROWN	1
71	— — —	HEAD WIRE RED	1
72	— — —	HEAD WIRE ORANGE	1
73	— — —	HEAD WIRE YELLOW	1
74	— — —	HEAD WIRE WHITE	1
75	658-0223-55	HEAD PWB (WITHOUT COMPONENT)	1
76	658-0223-56	JOINT WIRE ASSY 6P	1
77	658-0223-57	SCREW (M2.6×4)	4
78	658-0223-58	SCREW (M2×2.5)	2
79	658-0223-59	SCREW (M2×3.5)	2
80	658-0223-60	WASHER (1.6×3.2)	2
81	658-0223-61	WASHER (1.2×3.2)	1
82	658-0223-62	WASHER (1.5×3.2)	2
83	658-0223-63	WASHER (2.1×4.0)	2
84	658-0223-64	WASHER (2.1×4.0)	1
85	658-0223-65	E-RING	1

■ DISASSEMBLY AND ASSEMBLY PROCEDURES

Tape mechanism section 930-4310-00

Note: Follow the disassembly procedures in the numerical order given.

Cassette holder section

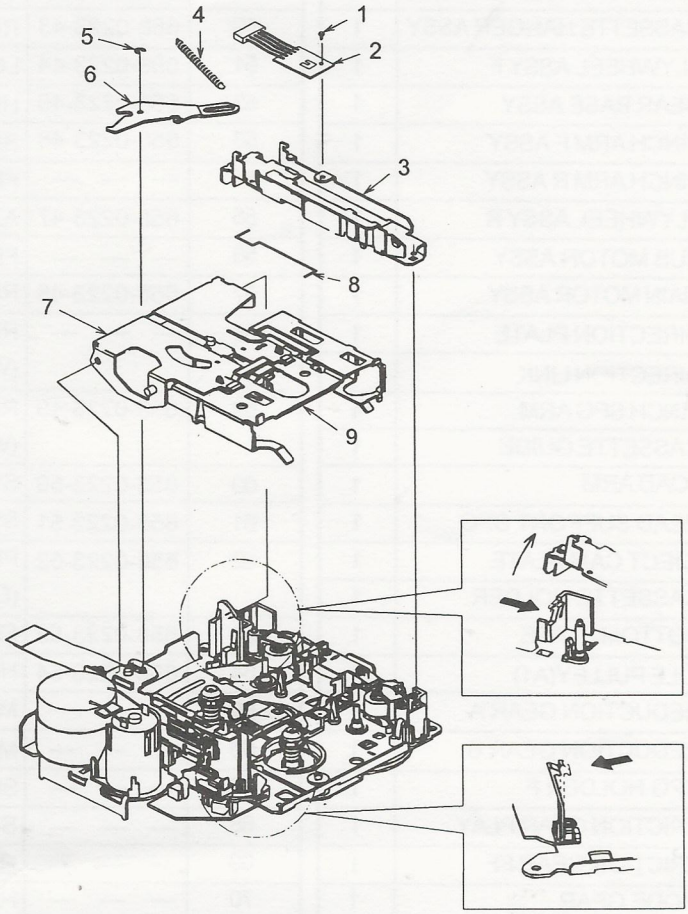

Head section

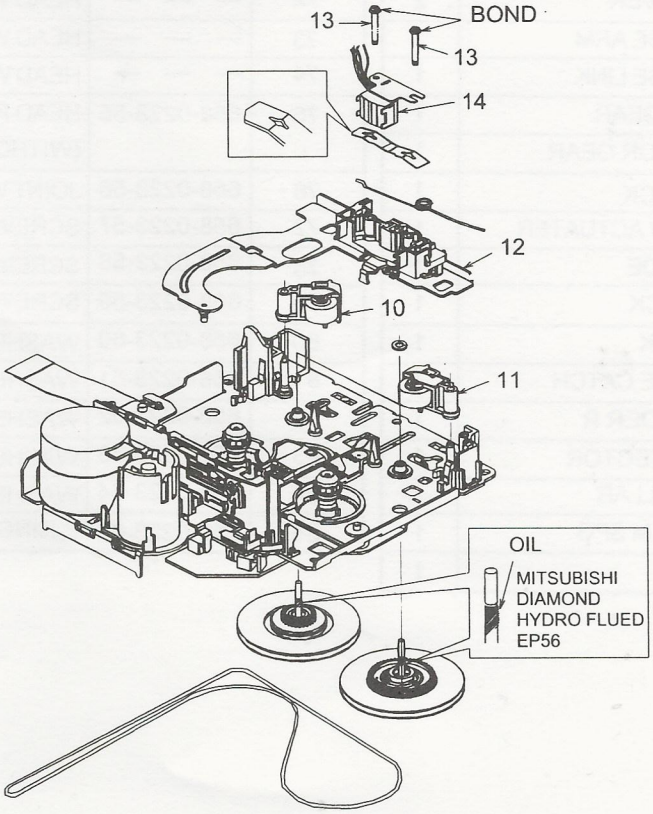

■ POINT FOR GREASING

Tape mechanism section 930-4310-00

Grease on the points marked by < ⊂⊃ >

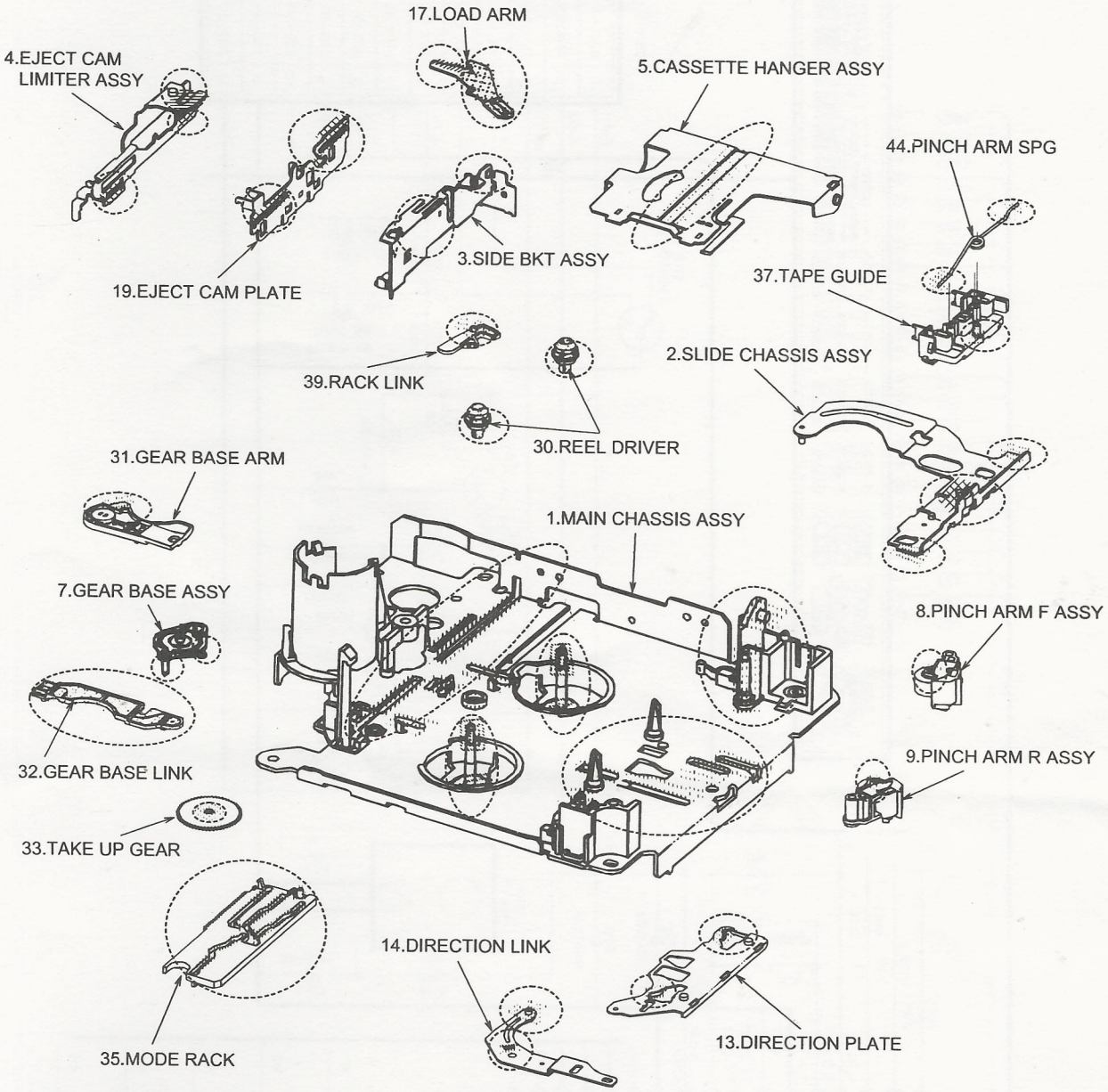

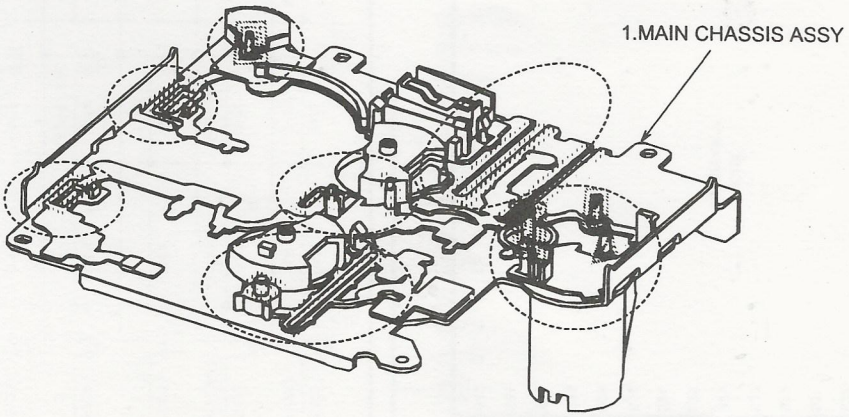

■ CIRCUIT DIAGRAM:
Switch PWB (B2) section

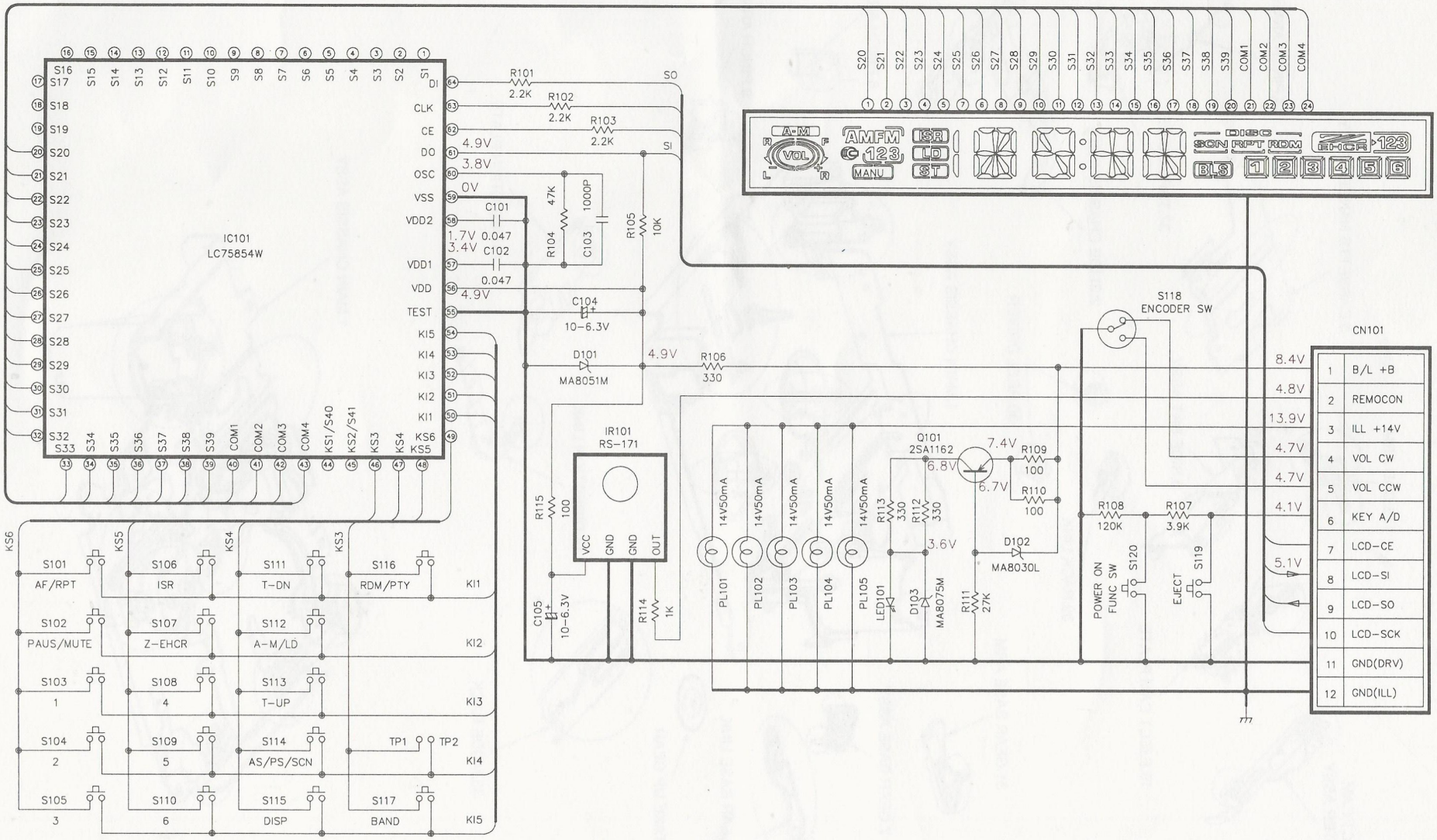

■ PRINTED WIRING BOARD:

Switch PWB (B2) section

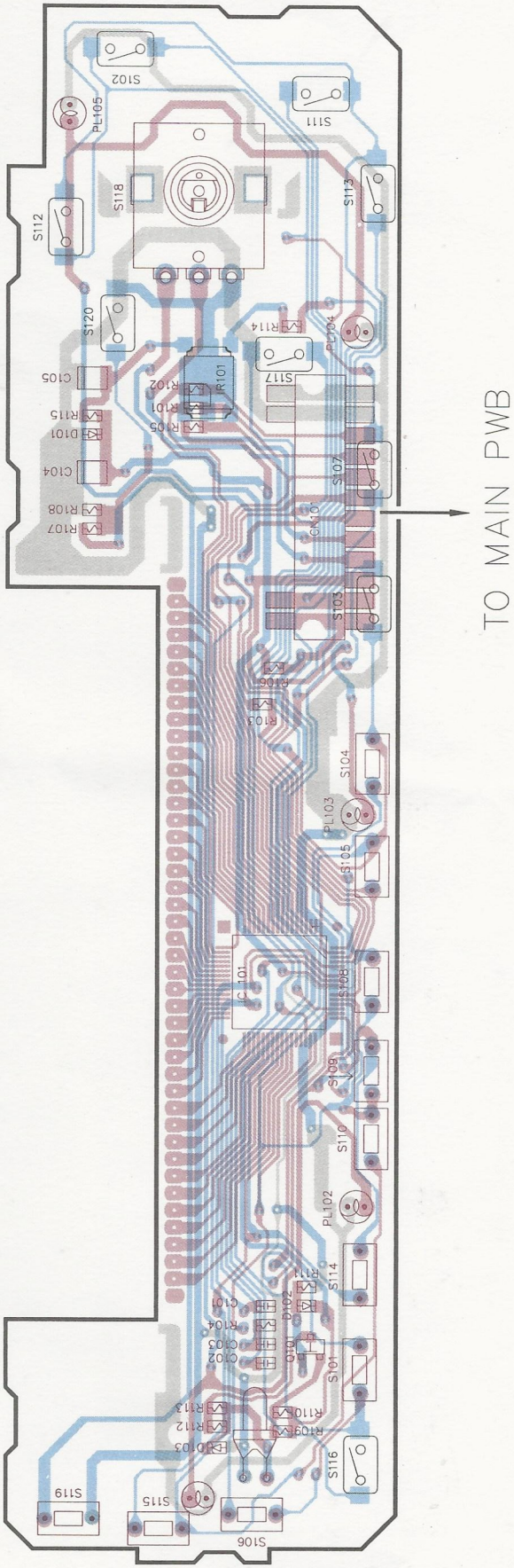

■ CIRCUIT DIAGRAM:

MECH PWB (B3) section

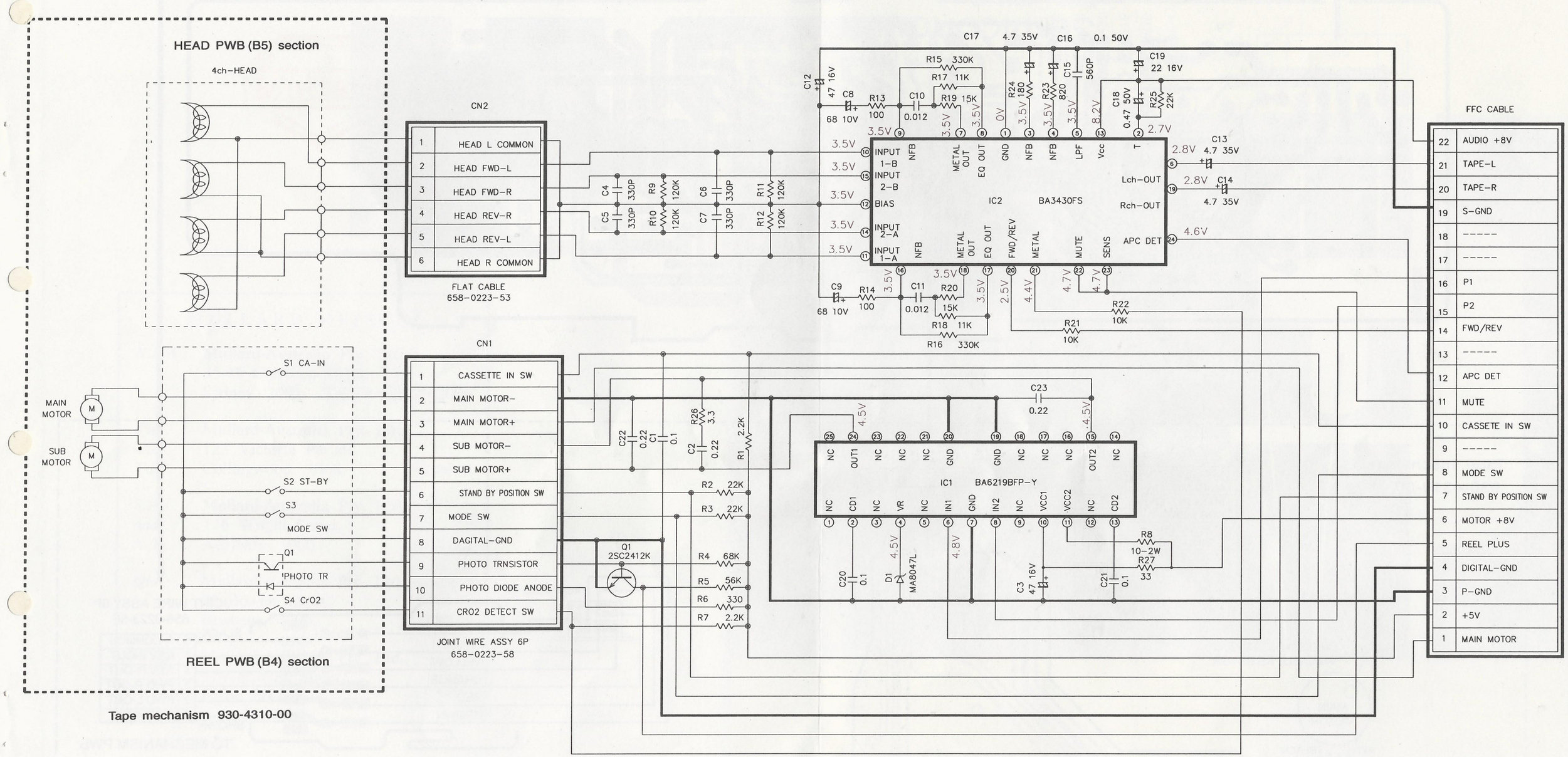

■ PRINTED WIRING BOARD:

MECH PWB (B3) section

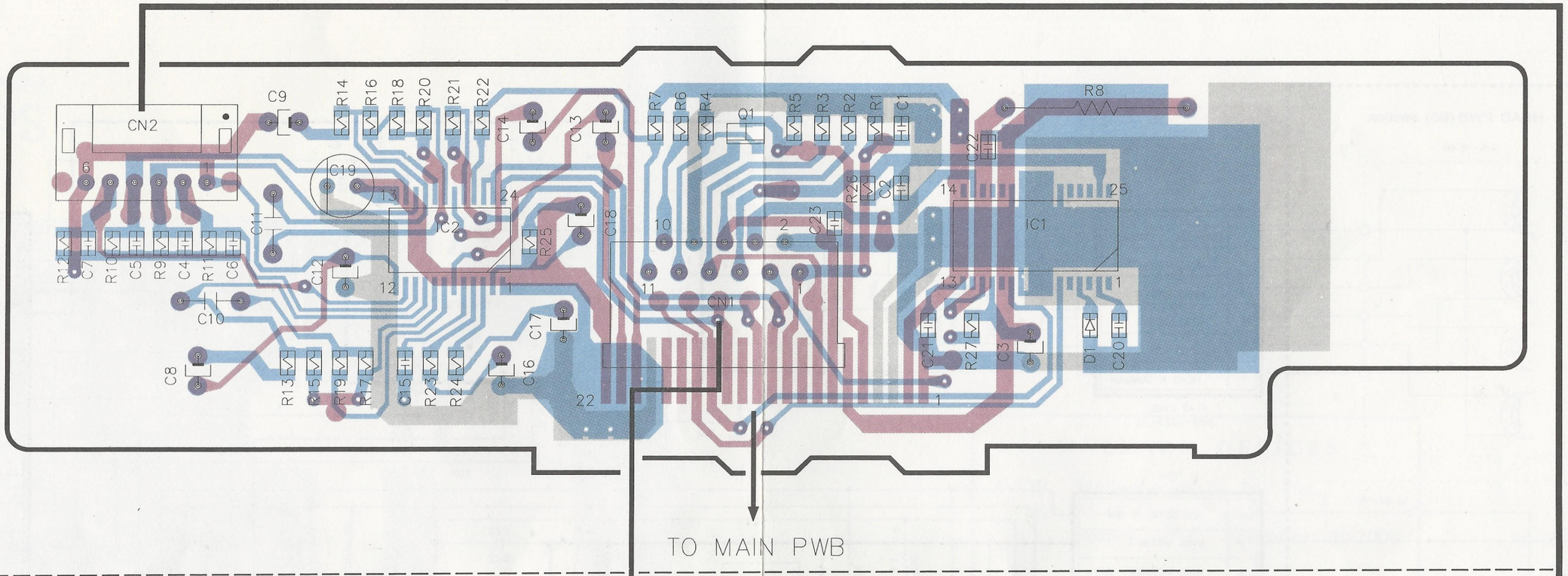

Tape mechaism
930-4310-00

1	CASSETTE IN SW
2	MAIN MOTOR −
3	MAIN MOTOR +
4	SUB MOTOR −
5	SUB MOTOR +
6	STAND BY POSITION SW
7	MODE SW
8	DAGITAL-GND
9	PHOTO TRNSISTOR
10	PHOTO DIODE ANODE
11	CRO2 DETECT SW

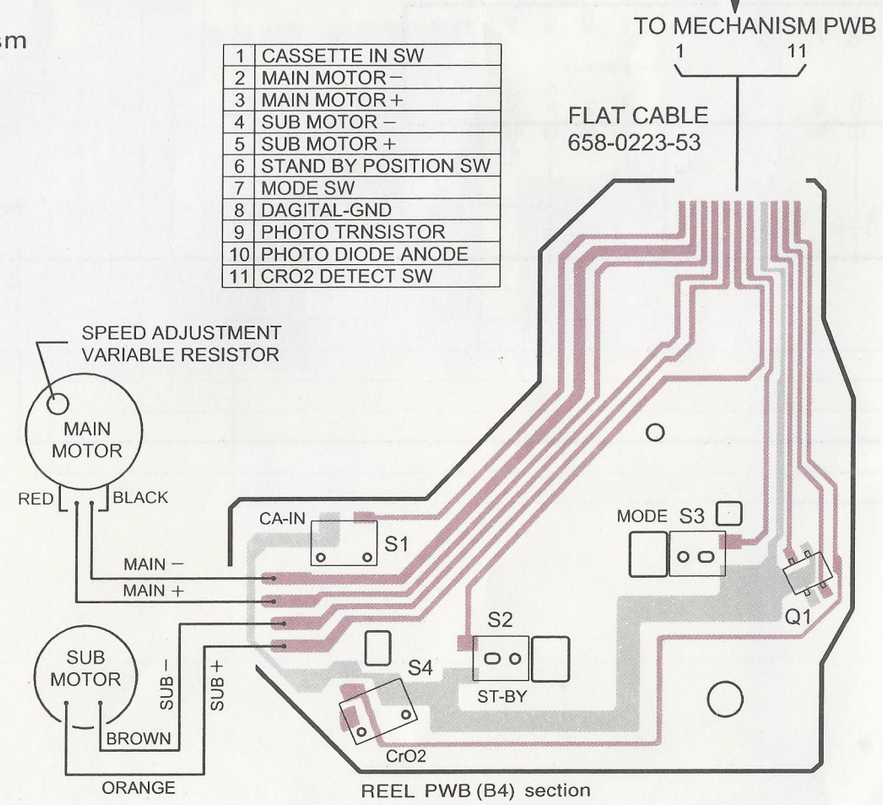

REEL PWB (B4) section

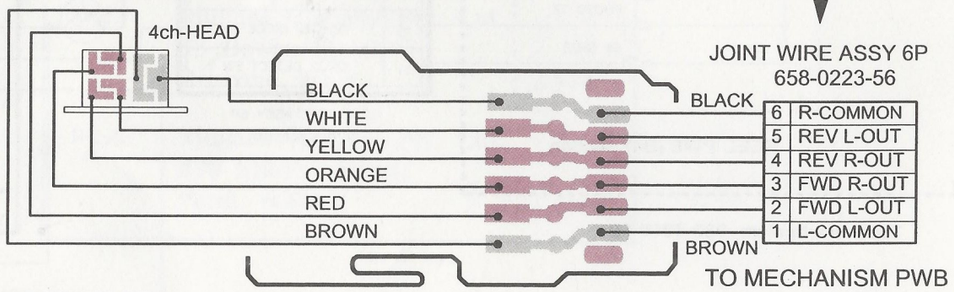

HEAD PWB (B5) section

■ PRINTED WIRING BOARD:

Main PWB (B1) section

C-BUS LINE

CASE	SHIELD
6	S-GND
5	REM +B
4	SRQ
3	
2	SCK
1	SO/SI
PIN NO.	NOTE

C-BUS LINE

13	MASTER ON
12	GND
11	ACC CONTROL
10	B/U
9	SLAVE ON
8	Rch-IN
7	Lch-IN
PIN NO.	NOTE

13P DIN (C-BUS)

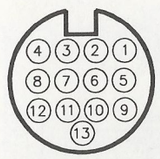

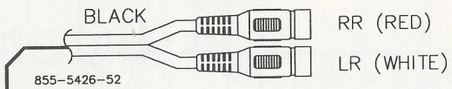

092-9000-41

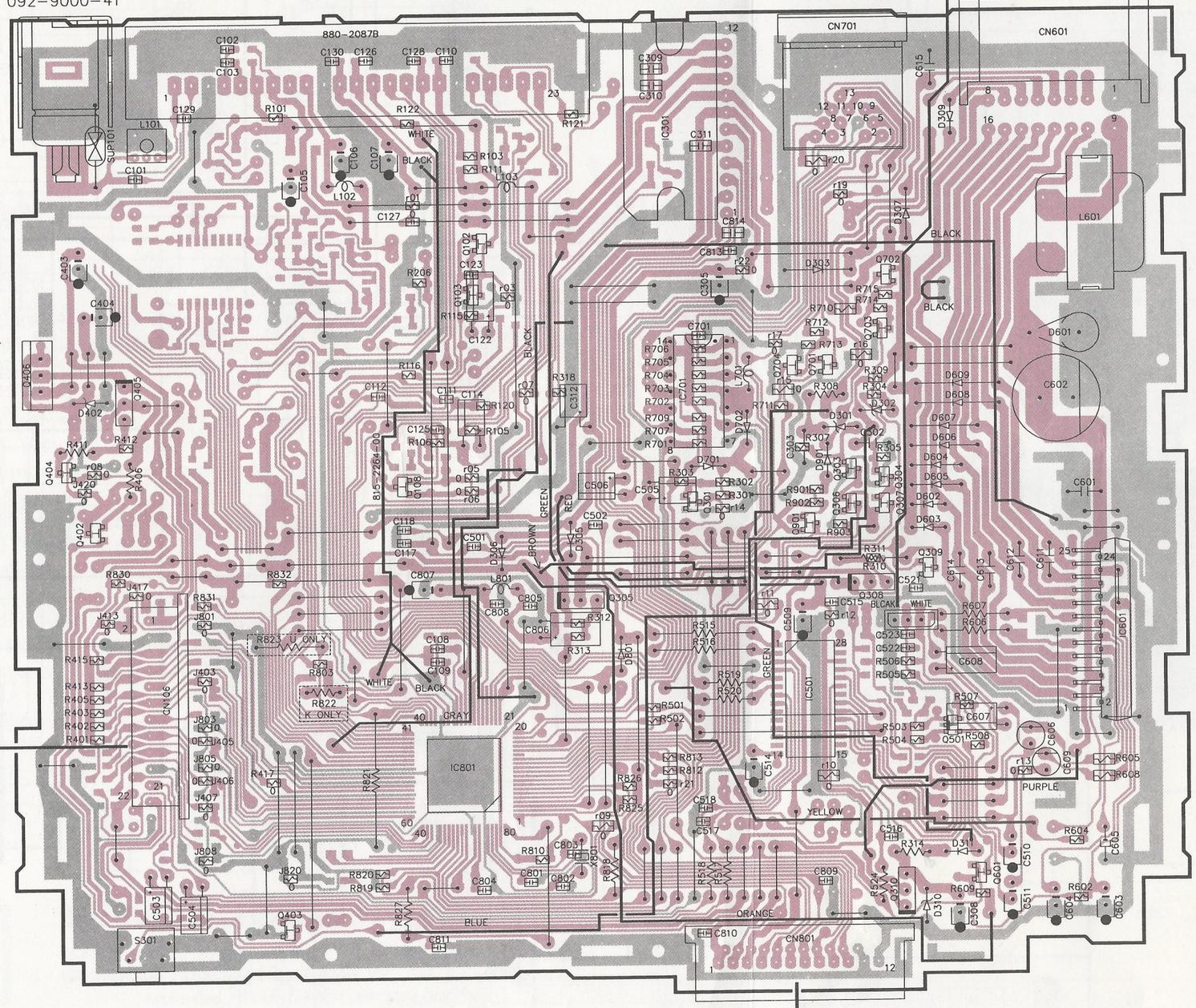

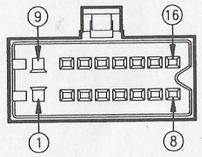

EX-LEAD (CONNECTOR)

16	RL(+)
15	FL(-)
14	FL(+)
13	FR(+)
12	FR(-)
11	RR(+)
10	RR(-)
9	BACK UP
8	RL(-)
7	PHONE INT
6	ACC
5	
4	REMOTE
3	
2	
1	GND
PIN NO	NOTE

■ CIRCUIT DIAGRAM:
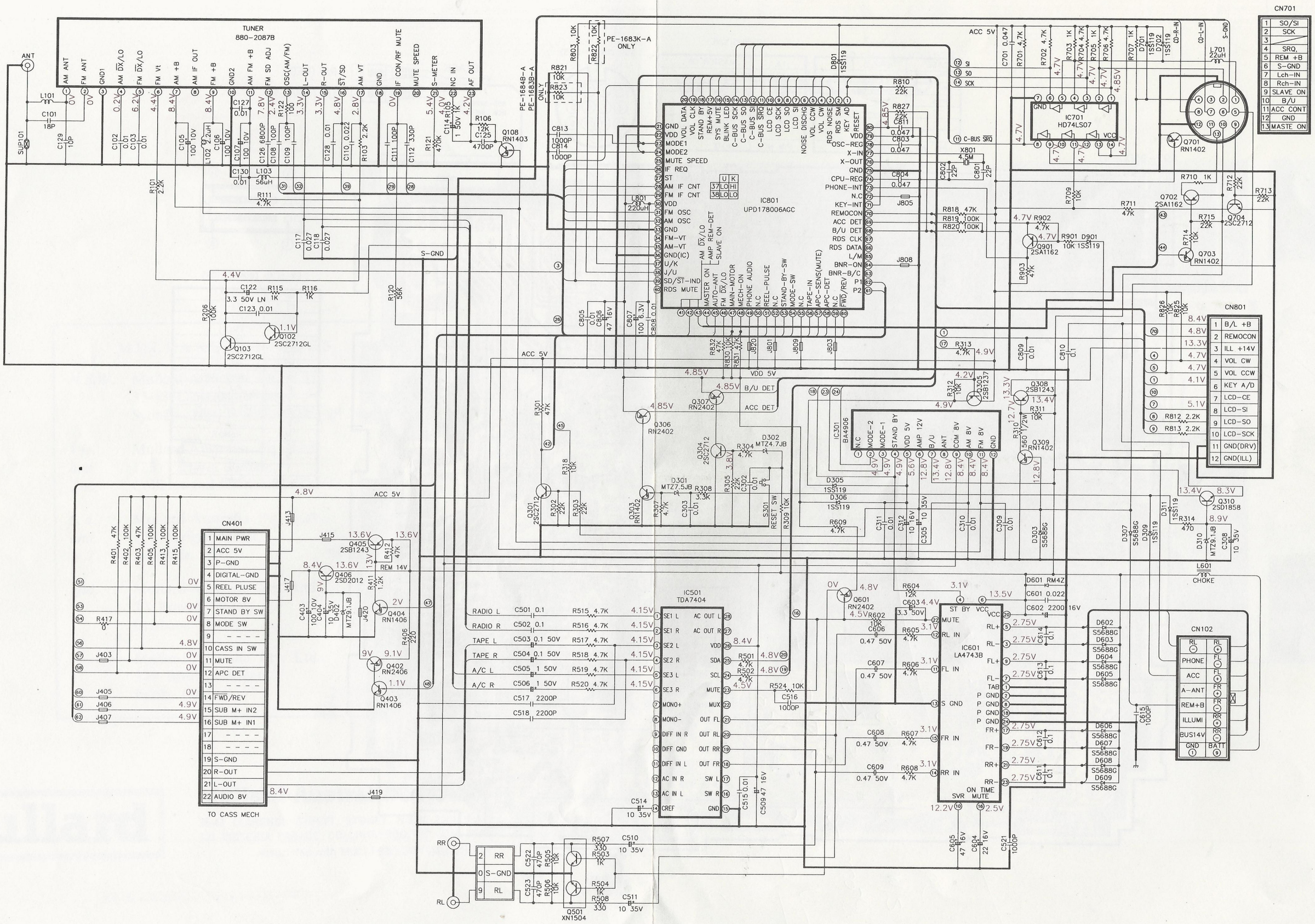
Main PWB (B1) section