SANYO

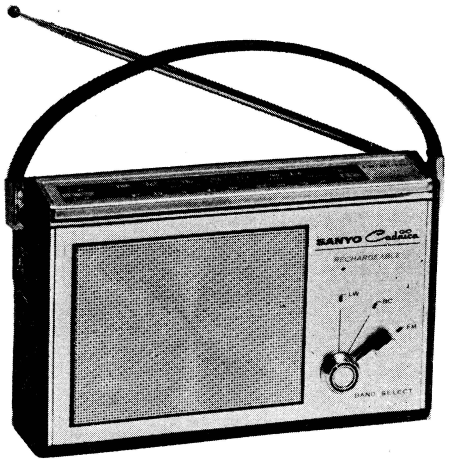

ALL-TRANSISTOR BC/LW/FM
PORTABLE RADIO

MODEL **AFT-60**

SERVICE MANUAL

SANYO ELECTRIC CO., LTD.
INTERNATIONAL DIVISION: SANYO ELECTRIC TRADING CO., LTD.
OSAKA, JAPAN

SPECIFICATIONS

FREQUENCY RANGE	BC	530—1605 Kc
	LW	150— 250 Kc
	FM	87— 108 Mc
INTERMEDIATE FREQUENCY	BC	455 Kc
	LW	455 Kc
	FM	10.7 Mc
SENSITIVITY	BC	125 μV/m (average for 10 mW output)
	LW	300 μV/m (average for 10 mW output)
	FM	2.5 μV (average for 50 mW output)
OUTPUT POWER	Undistorted	280 mW
	Maximum	400 mW
BATTERY	4 × 1¼V Sanyo rechargeable Ni–Cd battery or 4 × 1½V penlight battery or 6V radio battery	
CURRENT DRAIN	No signal	25 mA
	Maximum	120 mA

LOUDSPEAKER	3⅛″ (8 cm) permanent dynamic speaker Voice coil impedance 7 ohms, 4 watts	
TRANSISTORS	2SA240	FM/RF amplifier
	2SA240	FM converter
	2SA93	AM converter & FM/IF amplifier
	2SA93 × 2	FM/AM IF amplifier
	2SB54	Audio amplifier
	2SB54	Driver
	2SB22 × 2	Power amplifier
DIODES	1S188(1N60) × 2	FM dynamic damper
	1S188(1N60)	AM osc limiter
	1S188(1N60) × 2	FM detector
	1S188(1N60)	AM detector & AGC
THERMISTORS	SDT–20 × 2	Current regulator
DIMENSIONS	7″ wide × 4¼″ high × 2″ deep (18 × 11 × 5 cm)	
NET WEIGHT	1½ lbs (700 grs)	

ALIGNMENT PROCEDURES

LIGNMENT OF AM SECTION

Apply volt-meter across the voice coil. Volume control should be at maximum position. Output of signal generator should be no higher than necessary to obtain output reading.

STEP	SIGNAL GENERATOR COUPLING	SIGNAL GENERATOR FREQUENCY	RADIO SETTING	ADJUST FOR MAX. OUTPUT
IF ALIGNMENT				
1	Connect with standard loop antenna.	455 kc	Lower end	IF trans. T8 T5 T3
BROADCAST RF ALIGNMENT				
2	Connect with standard loop antenna.	525 kc	Lower end	BC osc coil L11
3		1650 kc	Upper end	BC osc trim. Ct5
4		Repeat steps 2 and 3.		
5		1400 kc	1400 kc	BC ant trim. Ct3
6		600 kc	600 kc	BC ant coil L6 L7

LONGWAVE RF ALIGNMENT

7	Connect with standard loop antenna	200 kc	200 kc	LW osc trim. Ct6
8		250 kc	250 kc	LW ant trim. Ct4
9		150 kc	150 kc	LW ant coil L8 L9
10		Repeat steps 8 and 9.		

BROADCAST RF REALIGNMENT

11	Exactly same as above.	Repeat steps 5 and 6.

ALIGNMENT OF FM SECTION

IF ALIGNMENT

1. CONNECTION OF APPARATUS

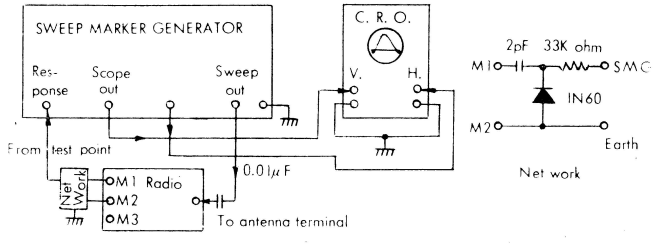

PARTS LIST

PART NO.	STOCK NO.	DESCRIPTION

TRANSISTORS

Tr1	2SA240	FM RF amplifier
Tr2	2SA240	FM converter (B2) green
Tr3	2SA93	AM converter & FM IF amplifier orange
Tr4	2SA93	FM/AM IF amplifier green
Tr5	2SA93	FM/AM IF amplifier green
Tr6	2SB54	Audio amplifier
Tr7	2SB54	Driver
Tr8	2SB22	Power amplifier
Tr9	2SB22	Power amplifier

DIODES AND THERMISTORS

D1	1S188(1N60)	FM dynamic damper
D2	1S188(1N60)	AM osc limiter
D3	1S188(1N60)	FM dynamic damper
D4	1S188(1N60)	FM detector } matched pair
D5	1S188(1N60)	FM detector } matched pair
D6	1S188(1N60)	AM detector & AGC
	SDT-20	Current regulator
	SDT-20	Current regulator

CONTROLS

CV1 CV4	R-C1075a	Tuning capacitor with trimmer
Ct6	R-C0027a	Trimmer mica 10～60pF
Ct2	R-C0042	Trimmer 1.7～7pF
VR	R-R11637	Volume control 10K 0.05W T-taper
S1, S6	R-S4186a	Rotary switch

TRANSFORMERS

T1	R-W5T085	FM 1st IF transformer GAN1942BM black 30K : 200
T2	R-W5T075	FM 3rd IF transformer GAC-930A black 25K : 200
T4	R-W5T075	FM 3rd IF transformer GAC-930A black 25K : 200
T6	R-W5T086	FM detector transformer GFN1357PZ orange 15K
T7	R-W5T087	FM detector transformer GFC1358SZ blue 8K
T3	R-W5T115	AM 1st IF transformer yellow 150K : 1.7K
T5	R-W5T098	AM 2nd IF transformer JFHC-9367 white 20K : 1.5K
T8	R-W5T073	AM 3rd IF transformer FLC-5846A black 10K : 5K
T9	R-W6173a	Input transformer 1K : 200

COILS

L1, L2	R-W2145	FM antenna coil 0.18μH, 0.21μH
L3	R-W4037a	FM RF coil 4½ turns
L5	R-W8134	FM oscillator coil 3½ turns
L4	R-W1014	FM RF choke coil 0.29μH 5½ turns
L6, L9	R-W2122a	AM antenna coil BC 345μH, SW 3.18mH
L10, L11	R-W8065	AM oscillator coil FTO-5221 15μH red

LOUDSPEAKER

SPKR	R-S6173	3″ permanent dynamic speaker 7 ohms 0.4W

PART NO.	STOCK NO.	DESCRIPTION

MISCELLANEOUS (Continued)

	D5-60	Charger
	R-S6250a	Earphone
	R-S1169	Ni-Cd battery
	S-39109a	Case -for charger
	R-48150a	Leather case
	R-31545a	Cabinet
	R-32388a	Dial panel -transparent polystyrol
	R-26862a	Metal dial
	R-26860	Punched panel
	R-26869	Front metal panel
	R-26868	Top panel
	R-32391a	Jack mtg base
	R-31546	Back cover
	R-26863	Specification sheet
	R-35235a	Antenna lock holder
	R-S8834	Band select knob
	R-S8375a	Tuning control knob
	R-33302	Volume control knob
	R-S8831	Carrying strap
	R-24565	Band fixing screw
	R-24399	Screw for fixing back cover
	R-39040a	Drum
	R-33303d	Pulley
	R-35180	Ferrite core holder
	R-39046d	Ferrite core holder with metal
	R-32390a	Plastic bar -visible thru dial panel
	R-24782a	Pointer
	——	Dial cord 0.3 1120mm tetron
	R-15168	Coiled spring -pointer guide cord
	R-15041	Coiled spring -dial cord tension
	R-S1210	Collapsable rod antenna
	R-S2040	Earphone jack
	R-S8019a	Battery case
	R-S1027a	Battery snap-on terminal
	R-24401	Stud nut -seaker mtg.
	R-23730	Heat sink
	R-S3129a	Input receptacle plug

ELECTROLYTIC CAPACITORS

C21	R-C9079	10 μF 3 WV
C36	R-C9079	10 〃 〃
C37	R-C9079	10 〃 〃
C38	R-C9080	30 〃 〃
C40	R-C9080	30 〃 〃
C41	R-C9077a	200 〃 6 WV
C42	R-C9077a	200 〃 〃
C43	R-C9059	200 〃 3 WV
C45	R-C9103	0.1 〃 25 WV Titan

PACKED CAPACITORS AND RESISTORS

	R-CXC023	(2.2K ohms ±5%) + (0.001μF ±20% 25V)
	R-CXC004	(1K ohms ±10% 1/10W) + (0.04μF +80 −20% 25V)
	R-CXC026	(820 ohms ±10% 1/10W) + (0.04μF +80 −20% 25V)

Printed in Japan

2. Volume control at minimum. Tuning gang at its maximum capacitance. Signal input (10.7 mc, sweep range 1 mc) is just high enough to provide sufficient pattern.
3. Adjust T6, T4, T2 and T1 to obtain maximum gain as well as to orient the 10.7 mc marker at the top center of the pattern, and to make the response curve symmetric.

DISCRIMINATOR ALIGNMENT

1. CONNECTION OF APPARATUS

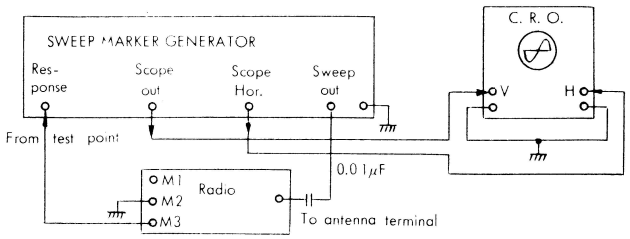

2. Volume control at minimum. Tuning gang at its maximum capacitance.
3. Adjust T6 for optimum symmetrical response curve with T7 detuned. After adjustment of T6, tune and adjust T7 in order to obtain S-shaped curve (symmetrical double curve) in which 10.7 mc marker locates at zero level and which is symmetric in viewing from the reference point of symmetry, i. e. 10.7 mc.

RF ALIGNMENT

Apply volt-meter across the voice coil. Volume control should be at maximum position. Output of signal generator should be no higher than necessary to avoid limiting effect.

STEP	SIGNAL GENERATOR COUPLING	SIGNAL GENERATOR FREQUENCY	RADIO DIAL SETTING	ADJUST FOR MAX. OUTPUT
1	Terminate output cables of generator with dummy antenna. Apply the signal (developped across the dummy) to antenna terminal of receiver.	106 mc	106 mc	Osc trim Ct2
2		90 mc	90 mc	Osc coil L5
3		Repeat steps 1 and 2.		
4		106 mc	106 mc	RF trim Ct1
5		90 mc	90 mc	RF coil L3
6		Repeat steps 4 and 5.		
7		Repeat entire steps 1 to 6.		

MAIN PARTS TERMINAL IDENTIFICATION

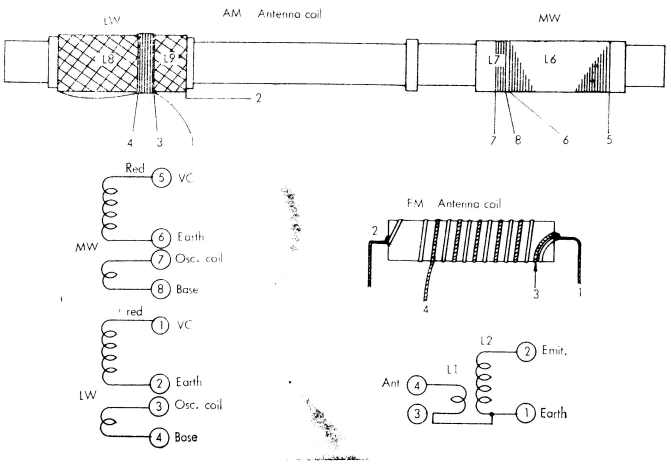

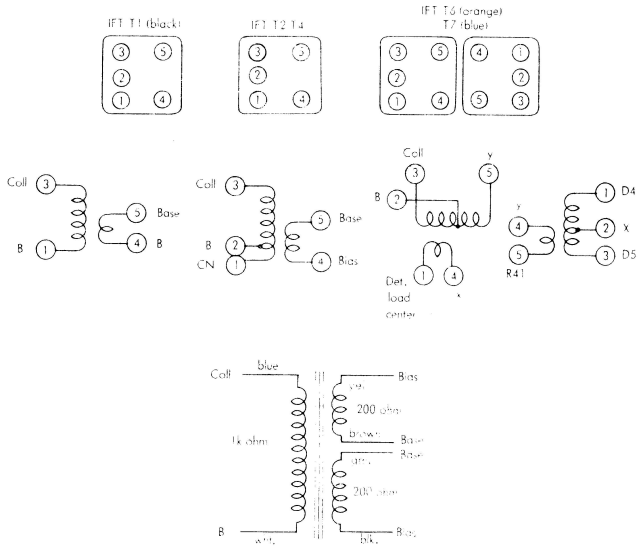

MAIN PARTS LAYOUT

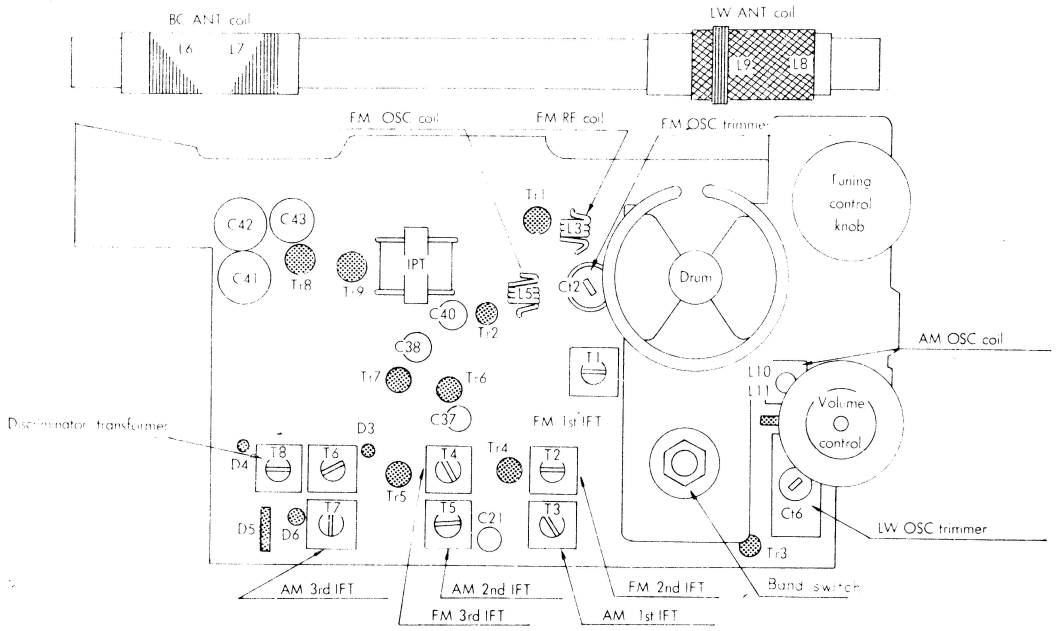

INTER-PARTS WIRING ILLUSTRATION

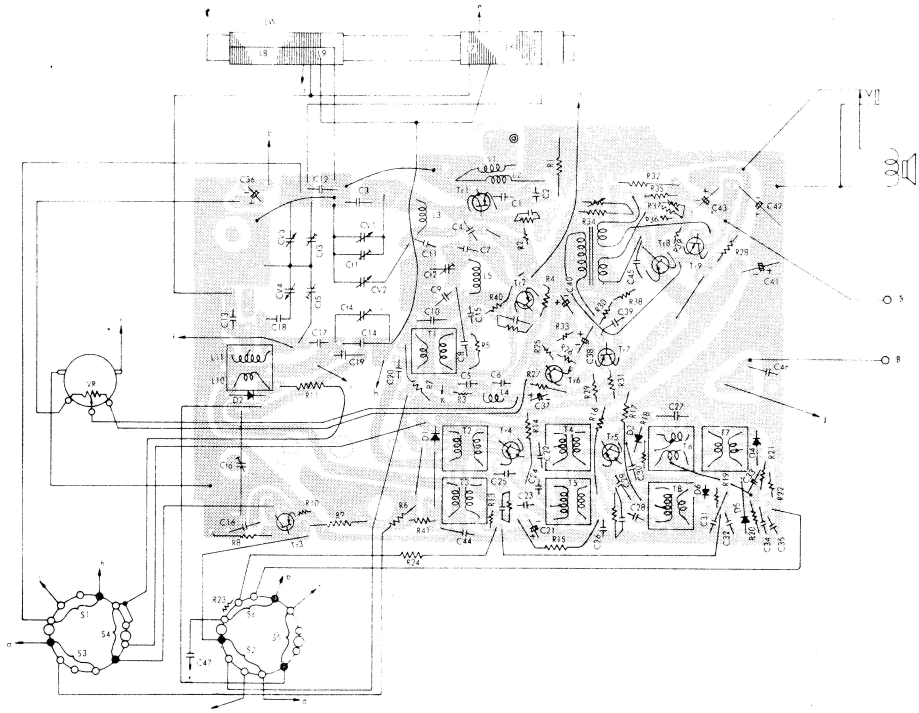
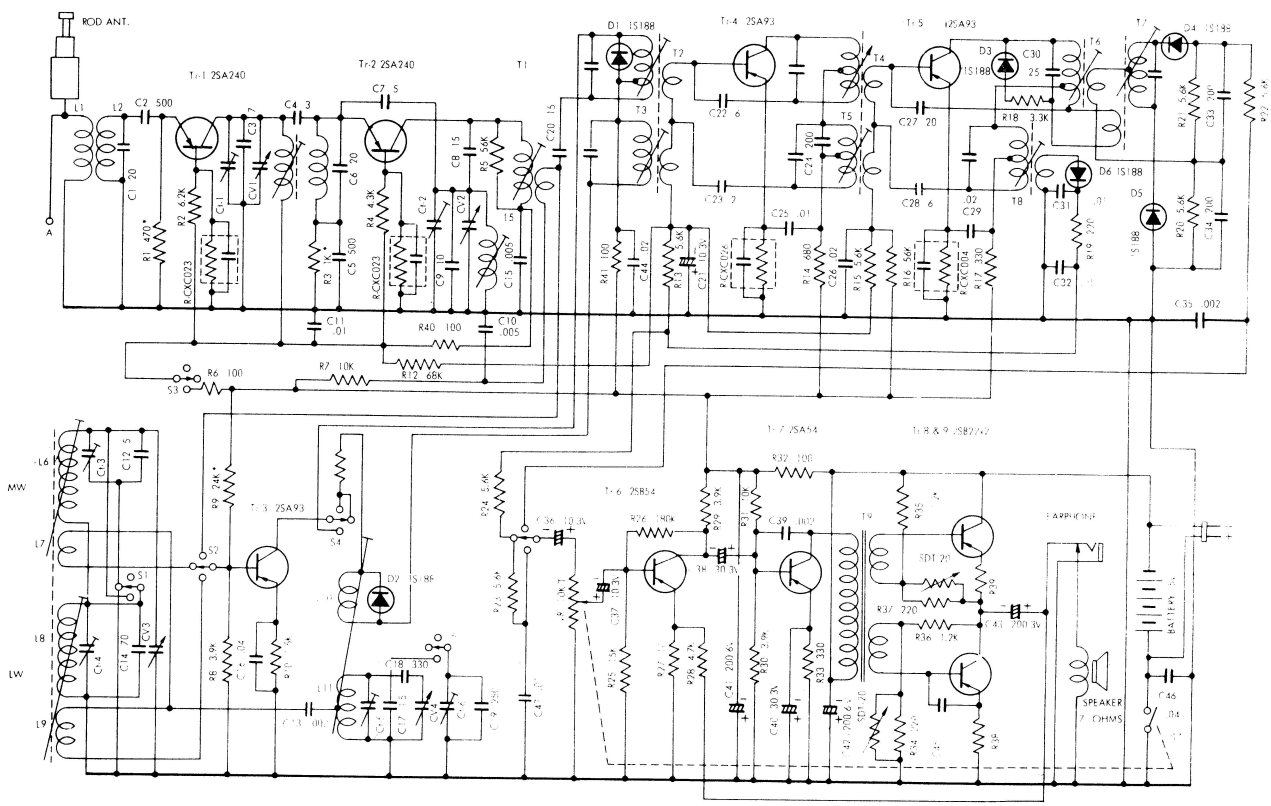
CIRCUIT DIAGRAM