Clarion

Clarion Co., Ltd.
5-35-2, Hakusan, Bunkyouku, Tokyo, 112-8608 Japan
Service Dept.- 50 kamitoda,Toda-shi,Saitama,335-8511 Japan Tel: 048-443-1111 FAX:048-433-6996

Published by Service Dept.
298-5915-00 Jun.2001 P
Printed in Japan

Service Manual

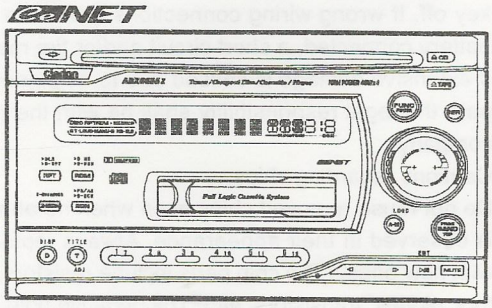

AM/FM CD/Cassette Player with CD/MD Changer Control

Model **ADX6655z**
(PE-2450K)

SPECIFICATIONS

FM tuner section

Frequency range:	87.5MHz to 108.0MHz
Usable sensitivity:	11dBf
50dB quieting sensitivity:	17dBf
Alternate channel selectivity:	75dB
Stereo separation:	35dB(1kHz)
Frequency response:	30Hz to 15kHz(±3dB)

AM tuner section

Frequency range:	531kHz to 1629kHz
Usable sensitivity:	25 μV

CD player section

System:	Compact disc digital audio system
Usable discs:	Compact disc
Frequency response:	10Hz to 20kHz(±1dB)
S/N ratio:	100dB(1kHz)
Dynamic range:	95dB(1kHz)
Harmonic distortion:	0.01%

Tape deck section

Wow & flutter:	0.06%(WRMS)
Channel separation:	45dB(1kHz)
Frequency response:	120 μs(normal) 30Hz to 18kHz 70 μs(metal) 30Hz to 20kHz
Signal to noise ratio:	70 μa(metal) 58dB/67dB (Dolby B NR on)

Audio section

Max. power output:	180W(45W×4)(JEITA)
Continous average power output:	16W×4 (4Ω,20Hz to 20kHz,1%THD)
Bass control action:	±13dB(30Hz)
Treble controle action:	±10dB(10kHz)
Line output lelvel:	1.8V(CD 1kHz)

General

Power supply voltage:	14.4V DC(10.8 to 15.6V allowable) negative ground
Current consumption:	Less than 15A
Speaker impedance:	4Ω(4Ω to 8Ω allowable)
Dimensions(mm):	Source unit 178(W)×100(H)×155(D) Remote control unit 44(W)×110(H)×27(D)
Weight:	Source unit 2.6kg Remote control unit 30g (including battery)

※ Specifications and design are subject to change without notice for further improvement.

NOTE

※ We cannot supply PWB with component parts in principle. When a circuit on PWB has failure , please repair it by component parts base. Parts which are not mentioned in service manual are not supplied.
※ CD-ROMs cannot be played by this unit.
※ Some CDs recorded in CD-R mode may not be usable.
※ Even when recorded in CD-RW mode,some CDs not be usable.
※ Titles of CD-text CDs cannot be displayed with this unit.
※ Dolby noise reduction manufactured under license from Dolby Laboratories Licensing Corporation. "DOLBY" and the double-D symbol are trademarks of Dolby Laboratories Licensing Corporation.

■ COMPONENTS

PE-2450K-A

Source unit	—————	1
Remote control unit	RCB-130-600	1
Battery(SUM-3)	—————	2
Extension lead	854-6349-56	1
Fuse(15A)	120-0150-00	1
Parts bag	—————	
Spacer	340-1581-00	8
Double face	347-3913-00	2
Machine screw(M5×8)	714-5008-41	8
Screw	716-0496-01	7
D-sems hex-bolt(M5×8)	734-5008-31	1
Parts bag	—————	
Finisher	383-0591-00	1

■ CAUTIONS

Use of controls,adjustments,or performance of procedures other than those specified herein,may result in hazardous radiation exposure.

The COMPACT DISC player and MINI DISC player should not be adjusted or repaired by anyone except properly qualified service personnel.

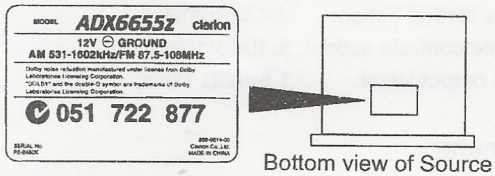

Bottom view of Source unit

■ To engineers in charge of repair or inspection of our products.

Before repair or inspection, make sure to follow the instructions so that customers and Engineers in charge of repair or inspection can avoid suffering any risk or injury.

1. Use specified parts.
   The system uses parts with special safety features against fire and voltage. Use only parts with equivalent characteristics when replacing them.
   The use of unspecified parts shall be regarded as remodeling for which we shall not be liable. The onus of product liability (PL) shall not be our responsibility in cases where an accident or failure is as a result of unspecified parts being used.
2. Place the parts and wiring back in their original positions after replacement or re-wiring.
   For proper circuit construction, use of insulation tubes, bonding, gaps to PWB, etc, is involved. The wiring connection and routing to the PWB are specially planned using clamps to keep away from heated and high voltage parts. Ensure that they are placed back in their original positions after repair or inspection.
   If extended damage is caused due to negligence during repair, the legal responsibility shall be with the repairing company.
3. Check for safety after repair.
   Check that the screws, parts and wires are put back securely in their original position after repair. Ensure for safety reasons there is no possibility of secondary ploblems around the repaired spots.
   If extended damage is caused due to negligence of repair, the legal responsibility shall be with the repairing company.
4. Caution in removal and making wiring connection to the parts for the automobile.
   Disconnect the battery terminal after turning the ignition key off. If wrong wiring connections are made with the battery connected, a short circuit and/or fire may occur.
   If extensive damage is caused due to negligence of repair, the legal responsibility shall be with the repairing company.
5. Cautions regarding chips.
   Do not reuse removed chips even when no abnormality is observed in their appearance. Always replace them with new ones. (The chip parts include resistors, capacitors, diodes, transistors, etc). The negative pole of tantalum capacitors is highly susceptible to heat, so use special care when replacing them and check the operation afterwards.
6. Cautions in handling flexible PWB
   Before working with a soldering iron, make sure that the iron tip temperature is around 270℃. Take care not to apply the iron tip repeatedly(more than three times)to the same patterns. Also take care not to apply the tip with force.
7. Turn the unit OFF during disassembly and parts replacement. Recheck all work before you apply power to the unit.
8. Cautions in checking that the optical pickup lights up.
   The laser is focused on the disc reflection surface through the lens of the optical pickup. When checking that the laser optical diode lights up, keep your eyes more than 30cms away from the lens. Prolonged viewing of the laser within 30cms may damage your eyesight.
9. Cautions in handling the optical pickup
   The laser diode of the optical pickup can be damaged by electrostatic charge caused by your clothes and body. Make sure to avoid electrostatic charges on your clothes or body, or discharge static electricity before handling the optical pickup.

9-1. Laser diode
   The laser diode terminals are shorted for transportation in order to prevent electrostatic damage. After replacement, open the shorted circuit. When removing the pickup from the mechanism, short the terminals by soldering them to prevent this damage.

9-2. Actuator
   The actuator has a powerful magnetic circuit. If a magnetic material is put close to it. its characteristics will change. Ensure that no foreign substances enter through the ventilation slots in the cover.

9-3. Cleaning the lens
   Dust on the optical lens affects performance. To clean the lens, apply a small amount of isopropyl alcohol to lens paper and wipe the lens gently.

CHANGING THE RECEPTION AREA

This unit is initially set to outside the USA frequency intervals of 9kHz for AM and 50kHz for FM. When using it inside the USA,the frequency reception range can be switched to the intervals below.

Setting the reception area

1. Press BND button and select the desired radio band(FM or AM).
2. While pressing DISP button,each time you press and hold the number "6" of the preset buttons for 2 seconds or longer,the reception area switches from outside the USA to inside the USA or from inside the USA to outside the USA.

※ Any station preset memories are lost when the reception area is changed.

TROUBLESHOOTING

Problem	Cause	Measure
Nothing happens when buttons are pressed. Display is not accurate.	The microprocessor has malfunctioned due to noise,etc.	Press the reset button with a thin rod. 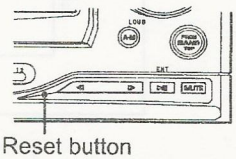 Reset button

ERROR DISPLAYS

If an error occurs,one of the following displays is displayed.
Take the measure described below to eliminate the problem.

	Error display	Cause	Measure
CD	ERROR 2	A CD is caught inside the CD deck and is not ejected.	This is a failure of CD deck's mechanism.
	ERROR 3	A CD cannot be played due to scratches,etc.	Replace with a non-scratched,non-warped disc.
TAPE	ERROR 1	Tape cannot be played due to defective tape such as cut tape.	Eject the tape then replace it with a new one.
	ERROR 2	Tape is caught and cannot be played.	Remove the caught or wound tape.
	ERROR 4	Tape mode cannot be detected.	This is a failure of tape mechanism.
	ERROR 8	Tape is caught and cannot be ejected.	Eliminate the reason for which the tape is caught.
CD CHANGER	ERROR 2	A CD inside the CD changer is not loaded.	This is a failure of CD changer's mechanism.
	ERROR 3	A CD inside the CD changer cannot be played due to scratches,etc.	Replace with a non-scratched,non-warped disc.
	ERROR 6	A CD inside the CD changer cannot be played because it is loaded upside-down.	Eject the disc then reload it properly.
MD CHANGER	ERROR H	Displayed when the temperature in the MD changer is too high and playback has been stopped automatically.	Lower the surrounding temperature and wait for a while to cool off MD changer.
	EEROR 2	An MD inside the MD changer is not loaded.	This is a failure of MD changer's mechanism.
	ERROR 3	An MD inside the MD changer cannot be played due to scratches,etc.	Replace with a non-scratched,non-warped disc.
	ERROR 6	Displayed when a non-recorded MD is loaded in the MD changer.	Load a pre-recorded MD in the MD changer.

If an error display other than the ones described above appears,press the reset button.

SETTING THE CLOCK

1. Press and hold ADV button for 1 second or longer to switch to the adjustment selection display.
2. Press Right button(▶▶) or Left button(◀◀) to select "CLOCK".
3. Press ENT button.
4. Press Right button or Left button to select the hour or the minute.
5. Turn the volume knob in clockwise or counterclockwise direction to set the correct time.(The clock is displayed in 12-hour format)
6. Press ENT button to store the time into memory.
7. Press ADJ button to return to the previous mode.

ADJUSTMENT

Dolby level

1. Playback a Dolby level test tape(400Hz,200nWb/m) and connect the Milli-volt meter to TP101(L)/TP102(R).
2. Adjust VR101(L)/VR102(R) to obtain an output of TP101(L)/TP102(R) is 388mV±1dB.(Dolby SW:off)

Azimuth

1. Playback a azimuth test tape(10kHz,−10VU) and turn each azimuth-adjusting screw to make each FOW & REV Maximum.
2. After adjustment,make adhesion with bond.

Tape speed

1. Playback a Wow & flutter test tape(3kHz,−10VU) and connect the frequency counter to TP101(L) or TP102(R).
2. Adjust Speed VR of the motor to obtain an output of TP101(L),TP102(R) is 3000Hz±45Hz.

BLOCK DIAGRAM

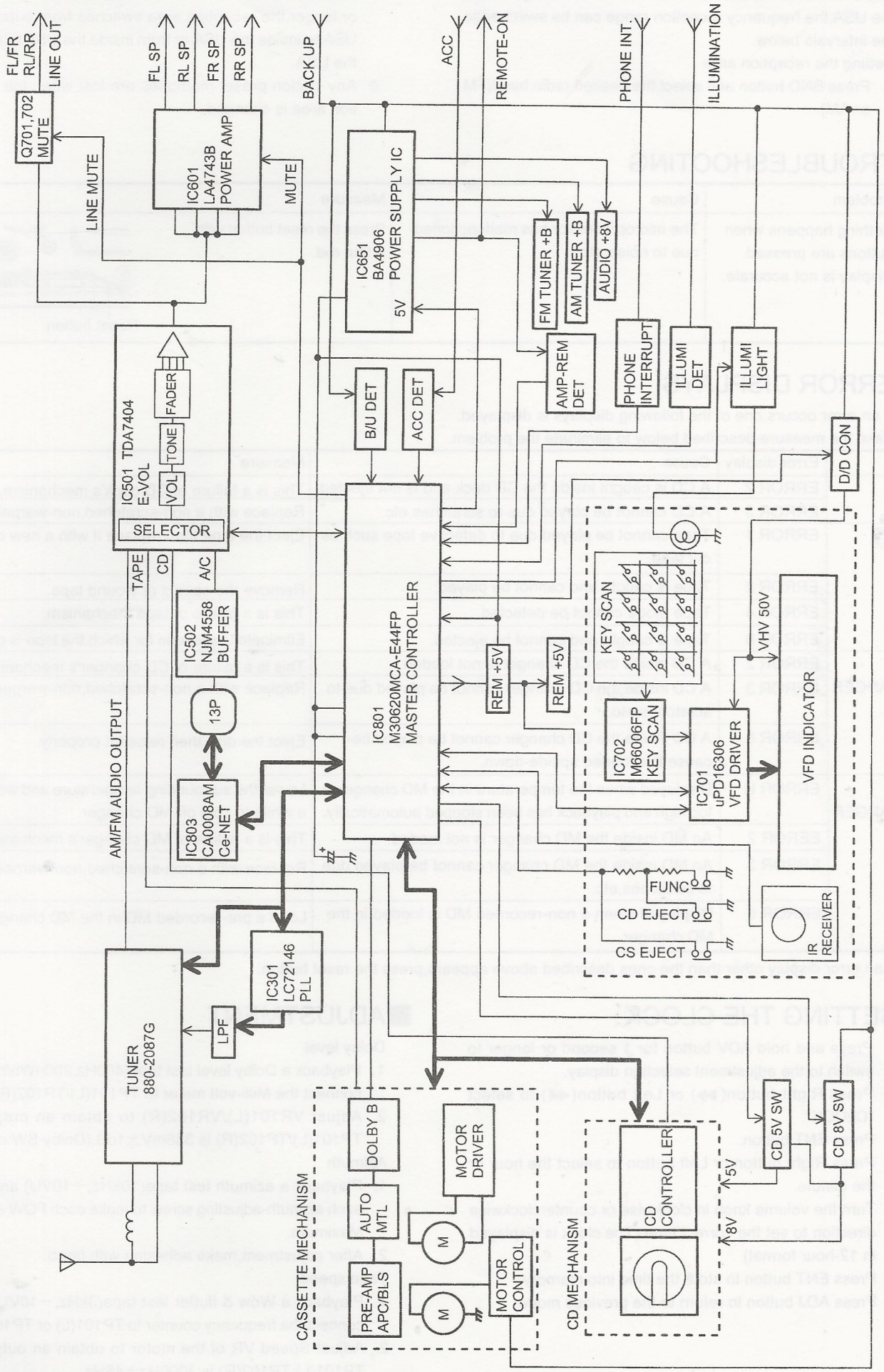

EXPLANATION OF IC

052-3364-00 M30620MCA-E44FP Radio & Tape System Controller

1.Terminal Description

pin 1: NU : - : Not in use.
pin 2: NU : - : Not in use.
pin 3: NU : - : Not in use.
pin 4: REMOCON : IN : Remote controller signal input terminal.
pin 5: SBSY : IN : CD IC Sub Q data request signal input.
pin 6: DOLBY ON : O : Dolby ON signal output.
pin 7: TIME BASE : IN : Time base signal input from the PLL IC.
pin 8: BYTE : IN : The data length selection(8bit/16bit).
pin 9: CN VSS : IN : Input "L" at single mode operation.
pin 10: NU : - : Not in use.
pin 11: ST_ / SD : IN : Station detection signal input in seeking. And stereo detection signal input in receiving FM.
pin 12: RESET_ : IN : Reset signal input.
pin 13: X OUT : O : Crystal connection.
pin 14: VSS : - : Negative supply voltage.
pin 15: X IN : IN : Crystal connection.
pin 16: VCC : - : Positive supply voltage.
pin 17: NU : - : Not in use.
pin 18: ACC DET : IN : ACC detection signal input.
pin 19: B/U OFF DET_ : IN : Backup voltage OFF signal input.
pin 20: KEY INT_ : IN : Interrupt signal input of FUNC or EJECT key.
pin 21: 29pinCONN : IN : Connect to pin29.
pin 22: DDC ON : O : The DDC ON signal output.
pin 23: KEY DO : O : The serial data output to the Key scan IC.
pin 24: NU : - : Not in use.
pin 25: KEY CLK : O : The clock pulse output to the Key scan IC.
pin 26: KEY CS : O : The chip selection signal output to the Key scan IC.
pin 27: KEY S : O : The serial data output to the Key scan IC.
pin 28: VFD STB : O : The latch strove signal output to the VFD driver.
pin 29: IE BUS RX : IN : IE Bus communication line.
pin 30: IE BUS TX : O : IE Bus communication line.
pin 31: PLL DO : O : Serial data output to the PLL IC.
pin 32: PLL DI : IN : Serial data input from the PLL IC.
pin 33: PLL SCK : O : Clock pulse output to the PLL IC.
pin 34: PLL CE : O : Chip enable signal output to the PLL IC.
pin 35: VFD B : O : The left data output to the VFD driver.
pin 36: VFD BLK : O : BLK output to the VFD driver.
pin 37: VFD CLK : O : Clock pulse output to the VFD driver.
pin 38: CHACK SW_ : IN : Chucking switch signal input.
pin 39: P 1 : O : Power motor control signal output. Ref. Table 1.
pin 40: P 2 : O : Power motor control signal output. Ref. Table 1.
pin 41: FWD_ / REV : O : "L"= FWD, "H"= REV.
pin 42: APC DET : IN : "H"= Non recorded part.
pin 43: APC SENSE : O : Sensitivity selection signal output to the APC circuit. "L"= play.
pin 44: BIT 2 : IN : Mechanism-mode detect signal input. Ref. Table 2.
pin 45: BIT 1 : IN : Mechanism mode switch signal input. Ref. Table 2.
pin 46: BIT 3 : IN : Mechanism mode switch signal input. Ref. Table 2.
pin 47: TAPE IN : IN : Tape loading start signal input.
pin 48: NU : - : Not in use.
pin 49: REEL PULSE : IN : Reel pulse input.
pin 50: MAIN MOTOR : O : "H"= Tape main motor ON.
pin 51: Mechanism ON : O : "H"= Tape mechanism power ON.
pin 52: VOL CLOCK : O : Serial data clock output for the electric volume IC.
pin 53: VOL DO : O : Serial data output to the electric volume IC.
pin 54: NU : - : Not in use.
pin 55: 5V REM : O : 5V power supply ON signal output for Micro computer.
pin 56: KEY ILL REM : O : Key illumination ON signal output.
pin 57: KEY DI : O : Key scan data input.
pin 58: SYS MUTE_ : O : System mute signal output.
pin 59: NU : - : Not in use.
pin 60: NU : - : Not in use.
pin 61: SYS ACC : O : ACC detect signal output.
pin 62: VCC : - : Positive supply voltage.
pin 63: AMP REM DT_ : IN : Remote controller wire short detection.
pin 64: VSS : - : Negative supply voltage.
pin 65: STANDBY : IN : Standby signal input. "H"= Standby.
pin 66: MODE2 ANT : O : The antenna power ON signal output.
pin 67: PHONE INT : IN : Telephone interrupt signal input.
pin 68: CD 5V REM : O : 5V CD power supply circuit control signal output.
pin 69: CD 8V REM : O : 8V CD power supply circuit control signal output.
pin 70: MCW : O : Loading motor control output. Ref. Table 3.
pin 71: MCCW : O : Loading motor control output. Ref. Table 3.
pin 72: TR C : IN : Photo sensor signal input from the CD mechanism.
pin 73: TR B : IN : Photo sensor signal input from the CD mechanism.
pin 74: TR A : IN : Photo sensor signal input from the CD mechanism.
pin 75: NU : - : Not in use.
pin 76: RST_ : IN : Reset signal input.
pin 77: CCE : O : Chip enable signal output to CD IC.
pin 78: BUC CLOCK : O : CD IC clock pulse output.
pin 79: BUC 3 : I/O: CD IC Data input / output.
pin 80: BUC 2 : I/O: CD IC Data input / output.
pin 81: BUC 1 : I/O: CD IC Data input / output.
pin 82: BUC 0 : I/O: CD IC Data input / output.
pin 83: NU : - : Not in use.
pin 84: NU : - : Not in use.
pin 85: NU : - : Not in use.
pin 86: NU : - : Not in use.
pin 87: NU : - : Not in use.
pin 88: NU : - : Not in use.
pin 89: NU : - : Not in use.
pin 90: INIT 1 : IN : Destination setting input. Ref. Table 4.
pin 91: INIT 2 : IN : Destination setting input. Ref. Table 4.
pin 92: NU : - : Not in use.
pin 93: NU : - : Not in use.
pin 94: ILL DET_ : IN : Illumination ON signal input.
pin 95: NU : - : Not in use.
pin 96: A VSS : - : Analog ground.
pin 97: KEY A/D : IN : Input terminal of A/D converter for Key judgment.
pin 98: Vref : - : Reference voltage
pin 99: A VCC : - : Positive supply voltage for the internal analog section.
pin100: NU : - : Not in use.

Table 1. Power motor control signal output

	LOAD	EJECT	BRAKE	STOP
P1 (pin 39)	H	L	H	L
P2 (pin 40)	L	H	H	L

Table 2. Mechanism mode switch signal input

	BIT1 (pin 45)	BIT2 (pin 44)	BIT3 (pin 46)
EJECT	H	H	H
LOAD	H	H	L
STOP	L	H	L
F-FF	L	L	H
F-REW	H	L	L
FWD-PLY	H	L	H
REV-PLY	L	H	H

Table 3. Loading motor control output. Table 3.

	LOAD	EJECT	BRAKE	STOP
MCW (pin 70)	H	L	H	L
MCCW (pin 71)	L	H	H	L

Table 4. Destination setting input

	INIT 1 (pin 90)	INIT 2 (pin 91)
The third area	L	L
Japan	L	H
North America	H	L
North America	H	H

■EXPLODED VIEW・PARTS LIST

Escutcheon section

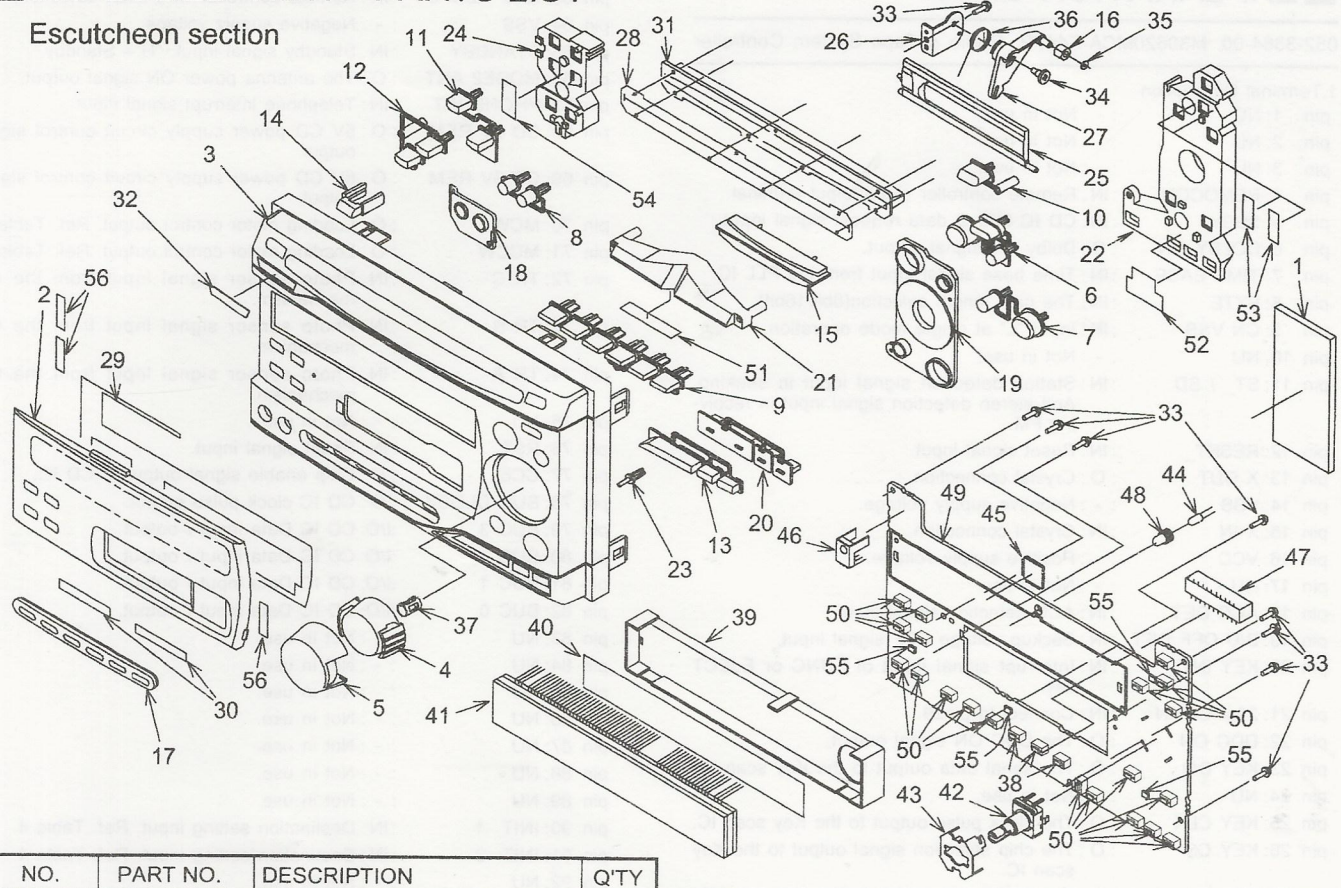

NO.	PART NO.	DESCRIPTION	Q'TY
1	345-8090-00	CUSHION RUBBER	1
2	373-0949-00	DIAL COVER	1
3	370-5926-00	ESCUTCHEON	1
4	380-5504-00	KNOB(IN)	1
5	380-5505-00	KNOB(OUT)	1
6	382-6069-01	BUTTON(ISR/TAPE-EJ)	1
7	382-6070-01	BUTTON(A-M)	1
8	382-6071-00	BUTTON(TITLE)	1
9	382-6072-01	BUTTON	1
10	382-6073-00	BUTTON	1
11	382-6074-00	BUTTON(SCN)	1
12	382-6075-00	BUTTON(ZECHR)	1
13	382-6076-00	BUTTON(ENT/MUTE)	1
14	335-6456-00	IR FILTER	1
15	335-6457-00	ILLUMI. PLATE(CD-IN)	1
16	335-5343-20	ROLLER	1
17	335-6459-00	TRIM PLATE(PRESET)	1
18	335-6460-00	ILUMI. PLATE(DT)	1
19	335-6461-00	ILLUMI. PLATE(VOL)	1
20	335-6462-00	BUTTON HOLDER（SRC/EN）	1
21	335-6463-00	ILLUMI. PLATE(PRESET)	1
22	335-6464-00	ILLUMI. PLATE(VOL)	1
23	382-6077-00	BUTTON(RESET)	1
24	335-6466-00	ILLUMI. PLATE	1
25	320-0537-06	DUSTPROOF COVER	1
26	331-2022-20	LEVER PLATE	1
27	335-5342-20	LEVER	1
28	346-0118-20	LEATHER SHEET	1
29	347-6437-01	DOUBLE FACE	1

NO.	PART NO.	DESCRIPTION	Q'TY
30	347-6299-00	DOUBLE FACE	2
31	371-3827-20	TRIM PLATE	1
32	378-0515-00	BADGE(Clarion)	1
33	716-0778-00	WAVE SCREW	9
34	716-1469-00	SCREW	1
35	746-0898-20	POLY-WASHER	1
36	750-3222-21	SPRING	1
37	399-2437-00	SPACER	1
38	013-6305-00	SWITCH	3
39	335-6465-00	VFD HOLDER	1
40	347-6296-00	DOUBLE FACE	1
41	379-4033-24	INDICATOR(VFD)	1
42	016-9900-79	ROTARY SWITCH	1
43	331-3080-00	VOL HOLDER	1
44	017-0444-00	PILOT LAMP(14V50mA)	1
45	051-6029-00	IC	1
46	060-4005-00	IR RECEIVER	1
47	074-1105-22	OUTLET SOCKET(22P)	1
48	345-3436-66	LAMP CAP	1
49	039-1793-00	SWITCH PWB (WITHOUT COMPONENT)	1
50	013-6001-50	SWITCH	20
51	347-6459-00	FILM	1
52	347-6460-00	FILM	1
53	347-6461-00	FILM	2
54	347-6462-00	FILM	1
55	001-7040-01	LED(WHT)	4
56	347-6535-00	DOUBLE FACE	3

Main section

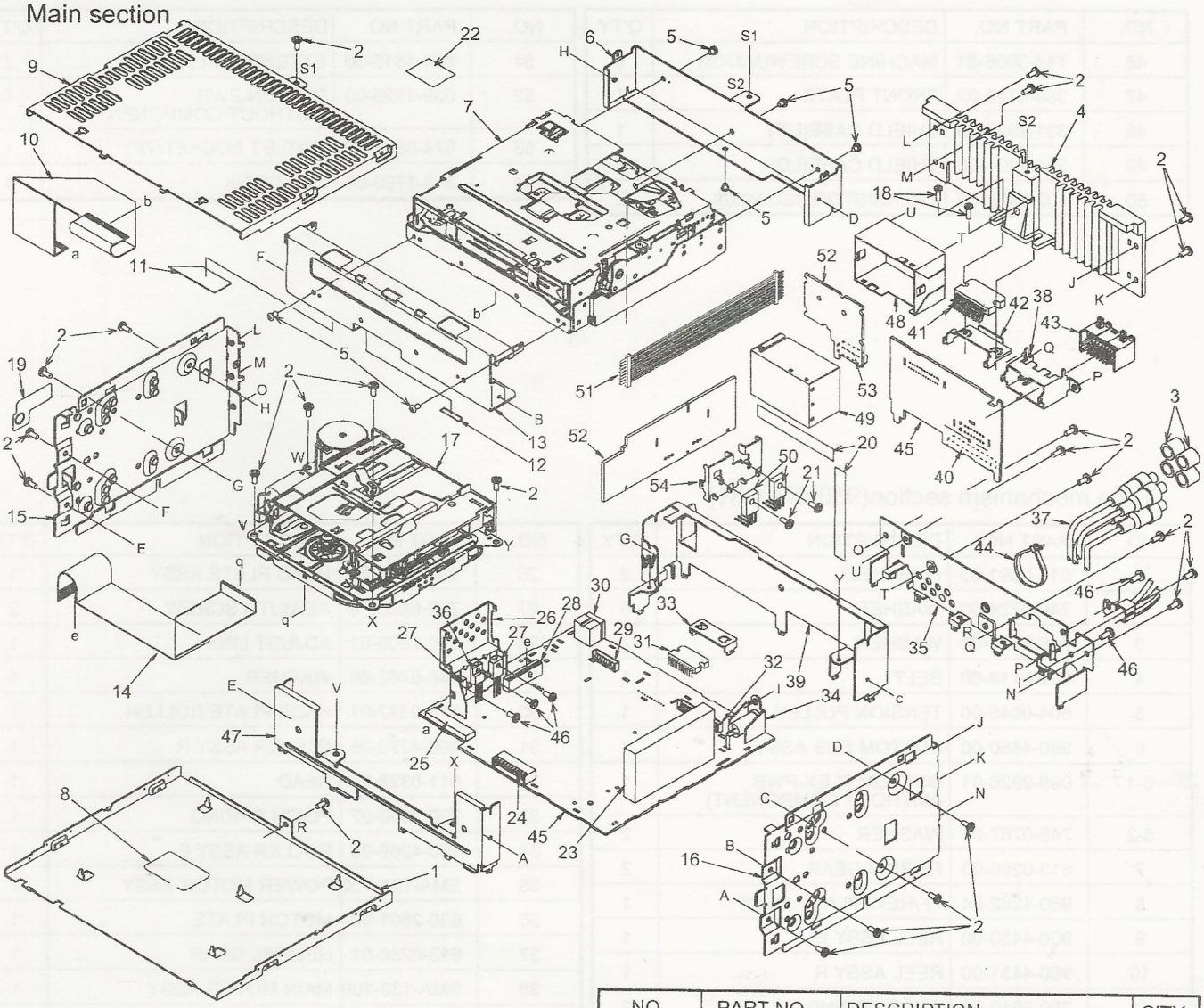

NO.	PART NO.	DESCRIPTION	Q'TY
1	311-1772-01	LOWER CASE	1
2	714-2606-81	MACHINE SCREW(M2.6×6)	24
3	345-3799-20	CAP	4
4	313-1709-00	HEAT SINK	1
5	714-2303-81	MACHINE SCREW(M2.3×3)	6
6	331-2282-20	MECHANISM BRACKET(R)	1
7	929-0092-82	CD MECHANISM	1
8	286-9614-00	SET PLATE	1
9	310-1639-20	UPPER CASE	1
10	816-2451-50	FLAT WIRE	1
11	347-5679-22	DOUBLE FACE	1
12	347-6036-00	DOUBLE FACE	1
13	331-2281-21	MECHANISM BRACKET(F)	1
14	816-2478-00	FLAT WIRE	1
15	305-0279-00	SIDE PLATE(LH)	1
16	305-0278-00	SIDE PLATE(RH)	1
17	930-0798-81	TAPE MECHANISM	1
18	714-2612-81	MACHINE SCREW(M2.6×12)	2
19	285-1809-00	GUIDE LABEL	1
20	347-6397-00	TAPE	2
21	714-3006-81	MACHINE SCREW(M3×6)	2
22	347-6309-00	INSULATOR	1

NO.	PART NO.	DESCRIPTION	Q'TY
23	880-2087G	FM/AM TUNER	1
24	076-0515-22	PLUG(22P)	1
25	074-1186-26	OUTLET SOCKET(26P)	1
26	313-1789-00	HEAT SINK	1
27	102-3420-50	TRANSISTOR(2SC3420)	2
28	074-0834-22	OUTLET SOCKET(22P)	1
29	076-0353-07	PLUG(7P)	1
30	074-1194-00	OUTLET SOCKET	1
31	051-3261-00	IC	1
32	076-0353-17	PLUG(17P)	1
33	313-1772-02	HEAT SINK	1
34	092-4000-51	ANTENNA RECEPTACLE	1
35	307-0650-00	REAR PLATE	1
36	103-2012-00	TRANSISTOR(2SD2012)	1
37	855-5401-00	RCA PIN CORD	1
38	331-2644-00	OUTLET HOLDER	1
39	331-2920-01	MECHANISM PLATE	1
40	074-0881-17	OUTLET SOCKET(17P)	1
41	051-2031-11	IC(LA4743B)	1
42	331-2277-20	IC HOLDER	1
43	074-1214-01	OUTLET SOCKET(16P)	1
44	335-0833-07	LEAD HOLDER	1
45	039-1926-00	MAIN PWB (WITHOUT COMPONENT)	1

NO.	PART NO.	DESCRIPTION	Q'TY
46	714-3006-81	MACHINE SCREW(M3×6)	5
47	309-0728-02	FRONT PLATE	1
48	331-2923-00	SHIELD CASE(UP)	1
49	331-2924-00	SHIELD CASE(LO)	1
50	102-3420-50	TRANSISTOR(2SC3420)	2

NO.	PART NO.	DESCRIPTION	Q'TY
51	854-4515-50	EXTENSION LEAD	1
52	039-1925-00	DD-CON PWB (WITHOUT COMPONENT)	1
53	074-0881-07	OUTLET SOCKET(7P)	1
54	313-1790-00	HEAT SINK	1

Tape mechanism section(930-0798-81)

NO.	PART NO.	DESCRIPTION	Q'TY
1	611-0091-03	FLYWHEEL	2
2	746-0724-00	WASHER	6
3	746-0624-00	WASHER	2
4	602-0118-00	BELT	1
5	604-0046-00	TENSION PULLEY	1
6	960-4450-00	BOTTOM SUB ASSY	1
6-1	099-9926-01	BOTTOM FLEX-PWB (WITHOUT COMPONENT)	1
6-2	746-0767-00	WASHER	2
7	613-0286-03	FF/REW GEAR	2
8	960-4262-04	FF/REW PLATE ASSY	1
9	960-4430-00	REEL ASSY F	1
10	960-4431-00	REEL ASSY R	1
11	750-2949-00	SLIDE SPRING	2
12	631-1993-01	SLIDE BUSH	2
13	746-0761-00	WASHER	2
14	960-4266-20	MODE PLATE ASSY	1
15	960-4282-06	DETECT SUB ASSY	1
16	613-0662-00	IDLER GEAR	2
17	960-4264-03	IDLER PLATE ASSY R	1
18	750-3017-02	IDLER SPRING	1
19	613-0337-00	POWER GEAR	1
20	613-0289-01	GEAR A	1
21	960-4294-22	DECK PLATE ASSY	1
22	960-4301-02	PLAY LINK ASSY	1
23	630-2598-05	EJECT LINK	1
24	960-4263-03	IDLER PLATE ASSY F	1
25	630-2597-01	CHANGE LINK	1

NO.	PART NO.	DESCRIPTION	Q'TY
26	960-4261-20	HEAD PLATE ASSY	1
27	716-0833-10	AZIMUTH SCREW	2
28	630-2600-01	ADJUST LINK	1
29	746-0762-00	WASHER	1
30	610-0342-01	HADE PLATE ROLLER	1
31	960-4270-05	ROLLER ASSY R	1
32	011-0328-00	HEAD	1
33	750-2946-02	PINCH SPRING	1
34	960-4269-05	ROLLER ASSY F	1
35	SMA-131-100	POWER MOTOR ASSY	1
36	630-2601-02	MOTOR PLATE	1
37	613-0288-01	HELICAL GEAR	1
38	SMA-130-100	MAIN MOTOR ASSY	1
39	606-0093-82	PACK GUIDE	1
40	630-2626-06	PWB FRAME	1
41	631-1992-02	PACK STOPPER	1
42	630-2642-01	GUIDE ARM	1
43	610-0343-00	GUIDE A ROLLER	1
44	750-2947-04	EJECT PLATE SPRING	1
45	960-4389-20	EJECT SUB ASSY	1
46	039-0053-00	SIDE PWB (WITHOUT COMPONENT)	1
47	716-0484-00	SCREW	13
48	HBS-487-100	REAR PWB ASSY (WITH COMPONENT)	1
49	716-0761-01	PWB SCREW	2
50	347-4080-01	INSULATOR	1
51	013-3906-00	SWITCH	1

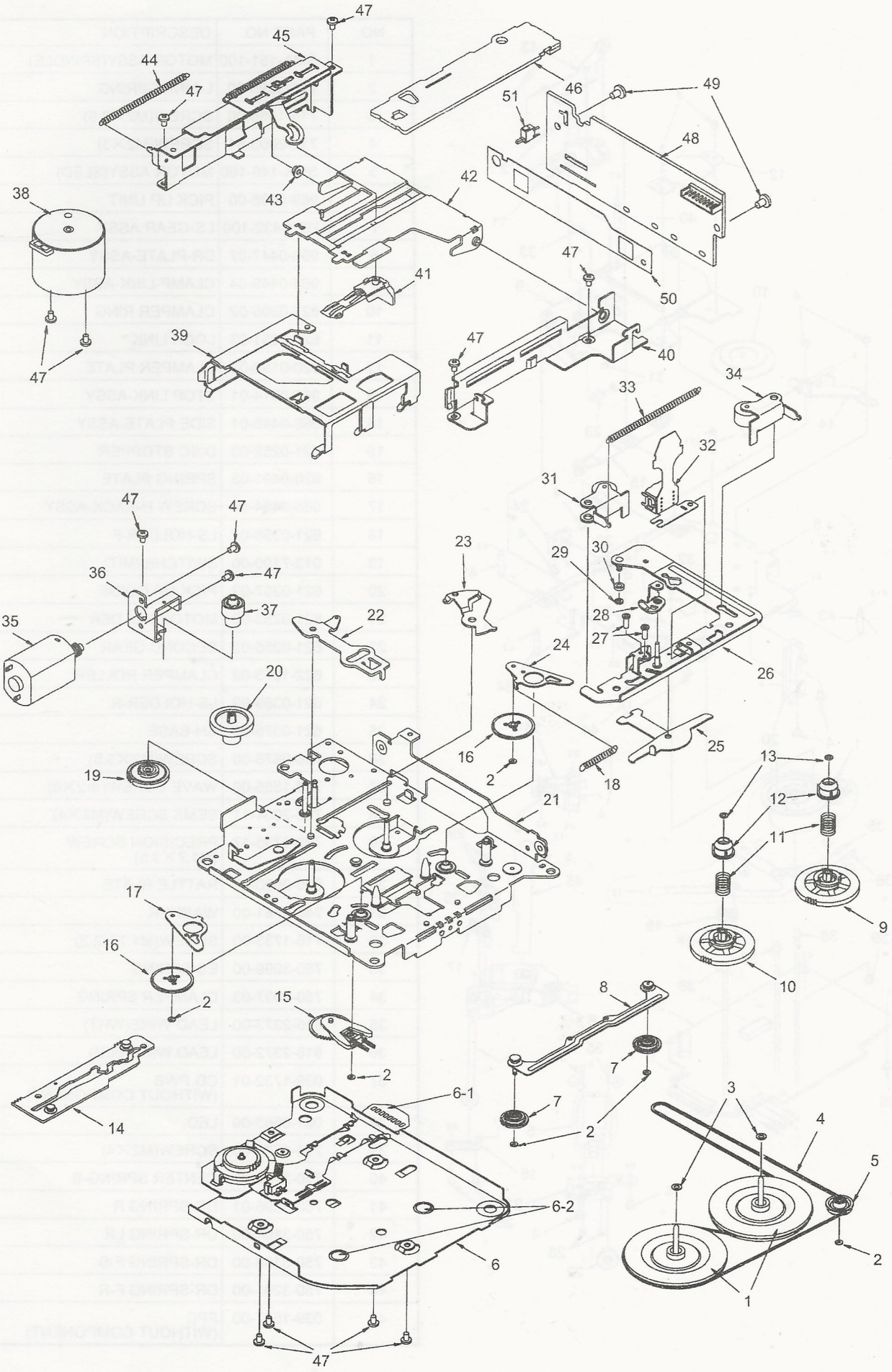
47
45
44
47
46
49
51
48
43
42
38
47
41
50
39
47
40
47
34
33
32
31
47
47
23
29
30
36
47
28
37
27
35
22
24
26
20
25
16
2
18
19
13
21
12
11
17
9
16
10
2
15
8
7
2
6-1
7
3
14
2
4
5
6-2
6
2
1
47

ADX6655z

CD mechanism section(929-0092-82) : Drive unit

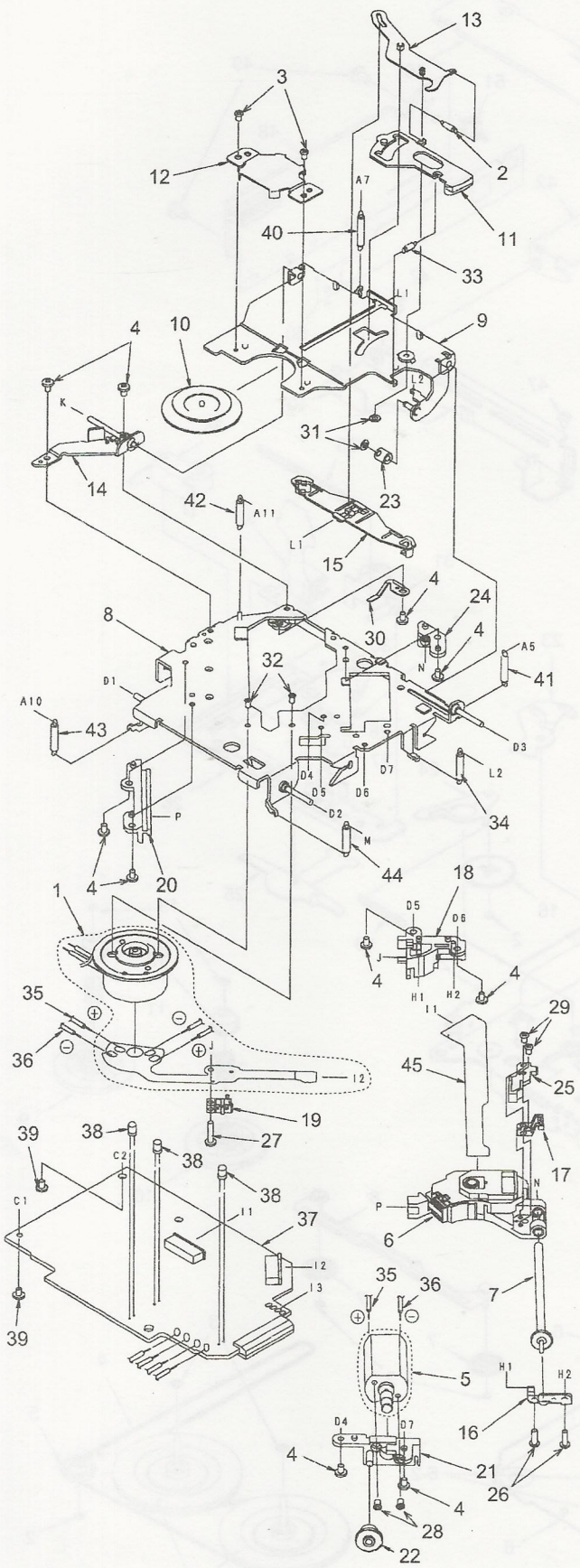

NO.	PART NO.	DESCRIPTION	Q'TY
1	SMA-151-100	MOTOR ASSY(SPINDLE)	1
2	750-3098-00	L-LINK SPRING	1
3	716-1468-00	SCREW(M2×2.5)	2
4	716-2003-81	SCREW(M2×3)	10
5	SMA-146-100	MOTOR ASSY(SLED)	1
6	969-0008-00	PICK UP UNIT	1
7	HBS-432-100	LS-GEAR ASSY	1
8	966-0447-07	DR-PLATE-ASSY	1
9	966-0449-04	CLAMP-LINK-ASSY	1
10	621-0205-02	CLAMPER RING	1
11	621-0251-03	LOCK LINK	1
12	620-0198-03	CLAMPER PLATE	1
13	966-0314-01	STOP LINK-ASSY	1
14	966-0448-01	SIDE PLATE-ASSY	1
15	621-0252-03	DISC STOPPER	1
16	620-0491-03	SPRING PLATE	1
17	966-0454-00	SCREW H-RACK-ASSY	1
18	621-0358-02	LS-HOLDER-F	1
19	013-7100-00	SWITCH(LIMIT)	1
20	621-0357-03	PICK UP GUIDE	1
21	621-0253-02	MOTOR HOLDER	1
22	621-0255-02	SECOND GEAR	1
23	622-1073-02	CLAMPER ROLLER	1
24	621-0359-02	LS-HOLDER-R	1
25	621-0375-00	SH-BASE	1
26	716-0675-00	SCREW(M2×5.5)	2
27	716-1555-00	WAVE SCREW(Φ2×8)	1
28	732-2004-11	SEMS SCREW(M2×4)	2
29	739-1735-17	PRECISION SCREW (M1.7×3.5)	2
30	620-0690-01	RATTLE PLATE	1
31	746-0761-00	WASHER	2
32	716-1733-00	SCREW(M1.7×2.3)	2
33	750-3099-00	ES-SPRING	1
34	750-3097-03	CLAMPER SPRING	1
35	816-2373-00	LEAD WIRE(WHT)	1
36	816-2372-00	LEAD WIRE(BLU)	1
37	039-1732-01	CD PWB (WITHOUT COMPONENT)	1
38	001-0563-00	LED	3
39	716-1670-00	SCREW(M2×4)	2
40	750-3202-00	CENTER SPRING-B	1
41	750-3096-01	DR-SPRING R	1
42	750-3164-00	DR-SPRING LR	1
43	750-3188-00	DR-SPRING F-B	1
44	750-3201-00	DR-SPRING F-R	1
45	039-1587-00	FPC (WITHOUT COMPONENT)	1

Main chassis

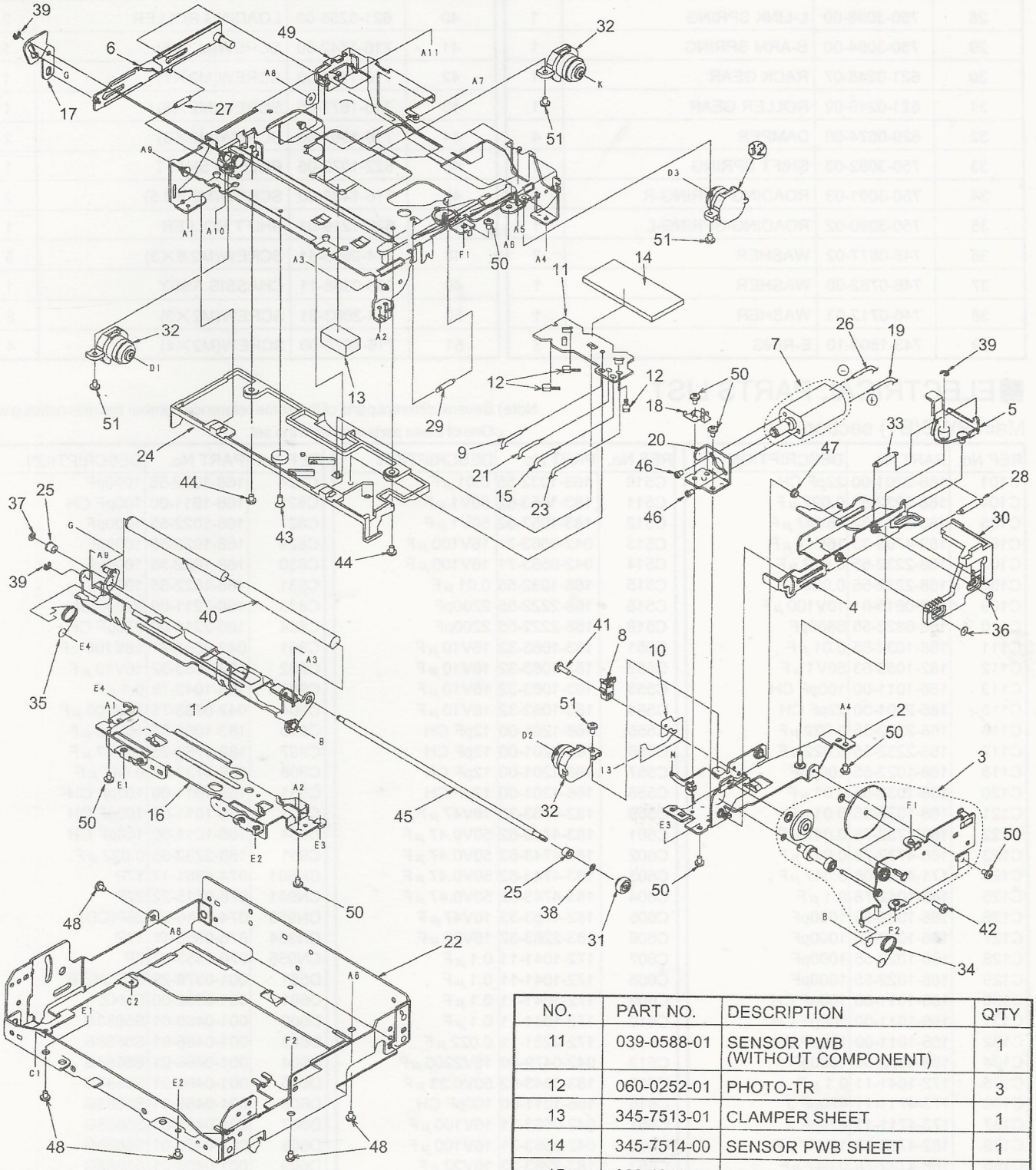

NO.	PART NO.	DESCRIPTION	Q'TY
1	966-0309-05	L-DISC-G-ASSY	1
2	966-0310-06	SHIFT-P-CH-ASSY	1
3	HBS-430-100	GEAR PLATE ASSY	1
4	966-0312-06	SHIFT-PLATE-ASSY	1
5	966-0358-01	DRIVE-L-PLATE-ASSY	1
6	966-0359-03	SIDE-L-PLATE-ASSY	1
7	SMA-147-100	MOTOR ASSY(LOADING)	1
8	013-3879-01	CHUCKING SWITCH	1
9	804-4910-60	VINYL-COAT-WIRE(YEL)	1
10	039-0586-01	CHUCKING SWITCH PWB (WITHOUT COMPONENT)	1

NO.	PART NO.	DESCRIPTION	Q'TY
11	039-0588-01	SENSOR PWB (WITHOUT COMPONENT)	1
12	060-0252-01	PHOTO-TR	3
13	345-7513-01	CLAMPER SHEET	1
14	345-7514-00	SENSOR PWB SHEET	1
15	802-4910-60	VINYL-COAT-WIRE(RED)	1
16	620-0485-04	FRONT PLATE	1
17	620-0488-01	S-L-LINK PLATE	1
18	620-0489-02	MOTOR PLATE	1
19	802-4904-60	VINYL-COAT-WIRE(RED)	1
20	620-0492-01	MOTOR BRACKET	1
21	801-4910-60	VINYL-COAT-WIRE(BRN)	1
22	620-0773-01	CD-MECH-BRKT	1
23	800-4910-60	VINYL-COAT-WIRE(BLK)	1
24	621-0402-01	U-DISC GUIDE-F	1
25	621-0243-02	ROLLER SLEEVE	2
26	800-4904-60	VINYL-COAT-WIRE(BLK)	1
27	750-3189-00	SIDE-L-SPRING	1

NO.	PART NO.	DESCRIPTION	Q'TY
28	750-3098-00	L-LINK SPRING	1
29	750-3094-00	S-ARM SPRING	1
30	621-0248-07	RACK GEAR	1
31	621-0249-02	ROLLER GEAR	1
32	629-0074-00	DAMPER	4
33	750-3092-03	SHIFT SPRING	1
34	750-3091-03	ROADING-SPRING-R	1
35	750-3090-02	ROADING-SPRING-L	1
36	746-0877-02	WASHER	2
37	746-0762-00	WASHER	1
38	746-0712-03	WASHER	1
39	743-1500-10	E-RING	3

NO.	PART NO.	DESCRIPTION	Q'TY
40	621-0258-03	LOADING ROLLER	2
41	716-1742-00	SCREW(M2×5)	1
42	716-1704-00	SCREW(M2×7)	1
43	716-1677-00	SCREW(M2×5)	1
44	716-1507-00	SCREW(M2×3)	2
45	622-1072-05	ROLLER SHAFT	1
46	716-1468-00	SCREW(M2×2.5)	2
47	622-1219-01	SHIFT ROLLER	1
48	714-2603-81	SCREW(M2.6×3)	5
49	966-0308-11	CHASSIS ASSY	1
50	714-2003-81	SCREW(M2×3)	8
51	716-1670-00	SCREW(M2×4)	4

■ELECTRICAL PARTS LIST

Note) Several different parts of the same reference number are alternative parts. One of those parts is used in the set.

Main PWB(B1) section

REF No.	PART No.	DESCRIPTION
C101	166-2201-00	22pF CH
C104	168-2232-55	0.022 μF
C105	183-4763-32	16V47 μF
C106	182-4763-33	16V47 μF
C107	168-2232-55	0.022 μF
C108	168-2232-55	0.022 μF
C109	042-0615-01	10V100 μF
C110	168-6822-55	6800pF
C111	168-1032-55	0.01 μF
C112	182-1053-63	50V1 μF
C113	166-1011-00	100pF CH
C115	166-2201-00	22pF CH
C116	168-2232-55	0.022 μF
C117	168-2232-55	0.022 μF
C118	168-1022-55	1000pF
C120	168-1032-55	0.01 μF
C121	168-1032-55	0.01 μF
C122	168-4732-78	0.047 μF
C123	168-4732-78	0.047 μF
C124	171-4732-06	0.047 μF
C125	168-1042-78	0.1 μF
C126	168-1022-55	1000pF
C127	168-1022-55	1000pF
C128	168-1022-55	1000pF
C129	168-1022-55	1000pF
C130	166-1011-00	100pF CH
C131	166-1011-00	100pF CH
C132	166-1011-00	100pF CH
C134	168-1022-55	1000pF
C135	172-1041-11	0.1 μF
C136	173-4711-11	470pF J
C137	173-4711-11	470pF J
C139	182-4763-33	16V47 μF
C150	168-4732-78	0.047 μF
C301	168-2232-55	0.022 μF
C302	183-4763-32	16V47 μF
C303	166-3311-00	330pF CH
C304	166-1011-00	100pF CH
C305	166-1011-00	100pF CH
C306	168-1042-78	0.1 μF
C307	183-1053-62	50V1 μF
C310	166-1501-00	15pF CH
C311	166-1501-00	15pF CH
C501	168-2732-78	0.027 μF
C502	168-2732-55	0.027 μF
C503	183-1053-62	50V1 μF
C504	183-1053-62	50V1 μF
C505	183-1053-62	50V1 μF
C506	183-1053-62	50V1 μF
C507	183-1053-62	50V1 μF
C508	183-1053-62	50V1 μF
C509	168-1032-55	0.01 μF

REF No.	PART No.	DESCRIPTION
C510	168-1032-55	0.01 μF
C511	183-1053-62	50V1 μF
C512	183-1053-62	50V1 μF
C513	042-0563-71	16V100 μF
C514	042-0563-71	16V100 μF
C515	168-1032-55	0.01 μF
C518	168-2222-55	2200pF
C519	168-2222-55	2200pF
C551	183-1063-32	16V10 μF
C552	183-1063-32	16V10 μF
C553	183-1063-32	16V10 μF
C554	183-1063-32	16V10 μF
C555	166-1201-00	12pF CH
C556	166-1201-00	12pF CH
C557	166-1201-00	12pF CH
C558	166-1201-00	12pF CH
C559	182-4763-33	16V47 μF
C601	183-4743-62	50V0.47 μF
C602	183-4743-62	50V0.47 μF
C603	183-4743-62	50V0.47 μF
C604	183-4743-62	50V0.47 μF
C605	182-4763-33	16V47 μF
C606	183-2263-32	16V22 μF
C607	172-1041-11	0.1 μF
C608	172-1041-11	0.1 μF
C609	172-1041-11	0.1 μF
C610	172-1041-11	0.1 μF
C612	172-2231-11	0.022 μF
C613	042-0479-00	16V2200 μF
C615	183-3343-62	50V0.33 μF
C616	166-1011-00	100pF CH
C651	042-0563-71	16V100 μF
C652	042-0563-71	16V100 μF
C653	183-2263-32	16V22 μF
C701	183-2263-32	16V22 μF
C702	183-2263-32	16V22 μF
C703	183-2263-32	16V22 μF
C704	183-2263-32	16V22 μF
C801	182-2263-33	16V22 μF
C802	172-1031-11	0.01 μF
C803	172-1031-11	0.01 μF
C804	183-1063-32	16V10 μF
C805	168-4732-78	0.047 μF
C808	168-1032-55	0.01 μF
C809	042-0577-00	6.3V100 μF
C810	042-0576-00	5.5V0.1F
C811	166-1011-00	100pF CH
C812	182-2263-33	16V22 μF
C818	166-1011-00	100pF CH
C819	168-1022-55	1000pF
C820	166-1007-00	10pF CH
C821	166-1011-00	100pF CH

REF No.	PART No.	DESCRIPTION
C824	168-1022-55	1000pF
C825	166-1011-00	100pF CH
C827	168-1022-55	1000pF
C829	168-1022-55	1000pF
C830	168-1022-55	1000pF
C831	168-1022-55	1000pF
C833	166-2211-00	220pF CH
C834	166-2211-00	220pF CH
C901	042-0563-71	16V100 μF
C902	183-1063-32	16V10 μF
C903	168-1042-78	0.1 μF
C904	042-0563-71	16V100 μF
C905	183-1063-32	16V10 μF
C907	182-4763-33	16V47 μF
C908	168-4732-78	0.047 μF
C931	166-1011-00	100pF CH
C933	166-1011-00	100pF CH
C934	166-1011-00	100pF CH
C951	168-2232-55	0.022 μF
CN601	074-0881-17	17P
CN951	076-0515-22	22P
CN953	074-1186-26	26P(CD)
CN954	076-0353-17	17P
CN955	076-0353-07	7P
D551	001-0376-26	MTZJ4.7B
D601	001-0592-00	RM4Z
D602	001-0466-01	S5688G
D603	001-0466-01	S5688G
D604	001-0466-01	S5688G
D605	001-0466-01	S5688G
D606	001-0466-01	S5688G
D607	001-0466-01	S5688G
D608	001-0466-01	S5688G
D609	001-0466-01	S5688G
D611	001-0466-01	S5688G
D612	001-0466-01	S5688G
D613	001-0330-00	1SS119
D614	001-0330-00	1SS119
D651	001-0330-00	1SS119
D652	001-0330-00	1SS119
D801	001-0330-00	1SS119
D802	001-0330-00	1SS119
D803	001-0330-00	1SS119
D805	001-0330-00	1SS119
D806	001-0376-41	MTZJ7.5B
D807	001-0376-30	MTZJ5.1C
D901	001-0466-01	S5688G
D903	001-0376-47	MTZJ9.1B
D905	001-0376-47	MTZJ9.1B
D906	001-0330-00	1SS119
D907	001-0376-32	MTZJ5.6B
IC301	051-6201-00	LC72146M

REF No.	PART No.	DESCRIPTION
IC501	051-5016-90	TDA7404DTR
IC502	051-0350-55	NJM4558M
IC601	051-2031-11	LA4743B
IC651	051-3261-00	BA4906-V2
IC801	052-3364-00	M30620MCA-E44FP
IC803	051-6600-38	CA0008AM
IC821	051-5403-08	S-80725-SN-DN-T1
J601	074-1214-01	16P
J903	074-0834-22	22P(CASSETTE)
J801	074-1194-00	13P CE-NET
L101	010-4007-00	30 μH
L103	010-2230-38	220 μH
L104	010-2230-38	220 μH
L105	010-2230-32	COIL
L301	010-2230-38	220 μH
L601	010-8020-01	COIL
L801	010-2230-10	COIL
L802	010-2230-14	2.2 μH
L951	010-2230-69	5.6 μH
L952	010-2230-35	120 μH
Q104	125-2004-02	RN1402
Q651	101-1237-00	2SB1237
Q652	102-2712-00	2SC2712
Q653	125-0002-02	RN2402
Q654	125-2004-03	RN1403
Q701	125-4001-00	XN1504
Q702	125-4001-00	XN1504
Q801	102-2712-00	2SC2712
Q802	100-1162-00	2SA1162
Q803	100-1162-00	2SA1162
Q804	125-0002-02	RN2402
Q805	125-0002-02	RN2402
Q806	102-2712-00	2SC2712
Q807	102-2712-00	2SC2712
Q811	125-2004-02	RN1402
Q812	100-1298-00	2SA1298
Q813	125-2004-02	RN1402
Q816	125-2004-04	RN1404
Q901	101-1240-00	2SB1240
Q902	125-2004-06	RN1406
Q904	103-2012-00	2SD2012
Q905	125-0002-06	RN2406
Q906	125-2004-06	RN1406
Q907	125-0002-06	RN2406
Q908	102-3420-50	2SC3420GR,BL
Q909	125-2004-06	RN1406
Q910	125-2004-06	RN1406
Q911	102-3420-50	2SC3420GR,BL
Q912	125-0002-06	RN2406
Q913	125-2004-06	RN1406
Q951	100-1298-00	2SA1298
Q952	125-2004-02	RN1402
R104	119-1031-10	1/16W 10kΩ
R105	119-1031-10	1/16W 10kΩ

REF No.	PART No.	DESCRIPTION
R106	119-4741-10	1/16W 470kΩ
R107	119-1021-10	1/16W 1kΩ
R111	119-1831-10	1/16W 18kΩ
R301	119-1021-10	1/16W 1kΩ
R302	119-2221-10	1/16W 2.2kΩ
R304	119-2221-10	1/16W 2.2kΩ
R308	119-5631-10	1/16W 56kΩ
R309	119-8211-10	1/16W 820Ω
R310	119-1021-10	1/16W 1kΩ
R311	119-1021-10	1/16W 1kΩ
R312	119-1041-10	1/16W 100kΩ
R313	119-1031-10	1/16W 10kΩ
R501	119-4721-10	1/16W 4.7kΩ
R502	119-4721-10	1/16W 4.7kΩ
R503	119-4721-10	1/16W 4.7kΩ
R504	119-4721-10	1/16W 4.7kΩ
R505	119-4721-10	1/16W 4.7kΩ
R506	119-4721-10	1/16W 4.7kΩ
R510	119-4721-10	1/16W 4.7kΩ
R511	119-4721-10	1/16W 4.7kΩ
R551	119-5131-10	1/16W 51kΩ
R552	119-5131-10	1/16W 51kΩ
R553	119-5131-10	1/16W 51kΩ
R554	119-5131-10	1/16W 51kΩ
R555	119-2031-10	1/16W 20kΩ
R556	119-2031-10	1/16W 20kΩ
R557	119-2031-10	1/16W 20kΩ
R558	119-2031-10	1/16W 20kΩ
R559	119-3311-10	1/16W 330Ω
R601	119-4721-10	1/16W 4.7kΩ
R602	119-4721-10	1/16W 4.7kΩ
R603	119-4721-10	1/16W 4.7kΩ
R604	119-4721-10	1/16W 4.7kΩ
R605	119-1231-10	1/16W 12kΩ
R606	119-1031-10	1/16W 10kΩ
R607	119-1821-10	1/16W 1.8kΩ
R651	119-4731-10	1/16W 47kΩ
R652	111-1021-91	1/4WS 1kΩ
R653	119-1031-10	1/16W 10kΩ
R654	119-2231-10	1/16W 22kΩ
R655	119-4721-10	1/16W 4.7kΩ
R656	119-1021-10	1/16W 1kΩ
R657	119-2231-10	1/16W 22kΩ
R658	119-1031-10	1/16W 10kΩ
R701	119-1021-10	1/16W 1kΩ
R702	119-2231-10	1/16W 22kΩ
R703	119-2231-10	1/16W 22kΩ
R704	119-3311-10	1/16W 330Ω
R705	119-3311-10	1/16W 330Ω
R706	119-1021-10	1/16W 1kΩ
R707	119-2231-10	1/16W 22kΩ
R708	119-2231-10	1/16W 22kΩ
R709	119-3311-10	1/16W 330Ω
R710	119-3311-10	1/16W 330Ω

REF No.	PART No.	DESCRIPTION
R801	119-4721-10	1/16W 4.7kΩ
R802	119-1031-10	1/16W 10kΩ
R803	119-4721-10	1/16W 4.7kΩ
R804	119-4731-10	1/16W 47kΩ
R805	119-4731-10	1/16W 47kΩ
R806	119-1531-10	1/16W 15kΩ
R807	119-1031-10	1/16W 10kΩ
R808	119-3311-10	1/16W 330Ω
R809	119-3321-10	1/16W 3.3kΩ
R810	119-1531-10	1/16W 15kΩ
R811	119-2231-10	1/16W 22kΩ
R812	119-1041-10	1/16W 100kΩ
R813	119-1041-10	1/16W 100kΩ
R814	119-5621-10	1/16W 5.6kΩ
R816	119-4731-10	1/16W 47kΩ
R817	119-2231-10	1/16W 22kΩ
R821	119-1031-10	1/16W 10kΩ
R822	111-1221-91	1/4WS 1.2kΩ
R823	119-2231-10	1/16W 22kΩ
R824	119-1041-10	1/16W 100kΩ
R826	119-3321-10	1/16W 3.3kΩ
R827	111-1811-91	1/4WS 180Ω
R828	111-1811-91	1/4WS 180Ω
R829	111-6801-91	1/4WS 68Ω
R831	119-1031-10	1/16W 10kΩ
R834	119-3321-10	1/16W 3.3kΩ
R835	119-3321-10	1/16W 3.3kΩ
R836	119-3321-10	1/16W 3.3kΩ
R855	111-3311-91	1/4WS 330Ω
R901	119-1031-10	1/16W 10kΩ
R902	111-4711-91	1.4WS 470Ω
R903	111-4711-91	1.4WS 470Ω
R904	111-3311-91	1/4WS 330Ω
R905	111-3311-91	1/4WS 330Ω
R908	119-4731-10	1/16W 47kΩ
R909	119-1041-10	1/16W 100kΩ
R910	119-1041-10	1/16W 100kΩ
R911	119-1041-10	1/16W 100kΩ
R914	119-1041-10	1/16W 100kΩ
R915	119-1031-10	1/16W 10kΩ
R916	119-1031-10	1/16W 10kΩ
R917	119-1031-10	1/16W 10kΩ
R918	119-1031-10	1/16W 10kΩ
R919	119-1031-10	1/16W 10kΩ
R922	119-2231-10	1/16W 22kΩ
R923	111-5611-91	1/4WS 560Ω
R951	119-1031-10	1/16W 10kΩ
R952	111-1221-91	1/4WS 1.2kΩ
R953	111-4711-91	1/4WS 470Ω
R954	111-4711-91	1/4WS 470Ω
R955	119-1021-10	1/16W 1kΩ
SUP101	060-0122-20	DSP-141N-S00B
X301	061-1066-00	7.2MHz
X801	060-1505-50	10MHz

DD-CON PWB(B2) section

REF No.	PART No.	DESCRIPTION
C101	042-9034-00	63V47 μF
C102	043-0324-50	6800pF
C103	043-0324-02	0.022 μF
C104	042-0393-00	35V100 μF
C105	042-0393-00	35V100 μF
C201	172-1041-11	0.1 μF
C202	172-1041-11	0.1 μF
C203	042-0617-00	63V330 μF
C204	184-4773-32	16V470 μF
C205	172-3331-11	0.033 μF
C206	172-3331-11	0.033 μF
	854-4515-50	EX-LEAD
CON101	074-0881-07	SOCKET(7P)

REF No.	PART No.	DESCRIPTION
D101	001-2002-00	AL01Z
D102	001-2002-00	AL01Z
D103	001-2002-00	AL01Z
D104	001-2002-00	AL01Z
D201	001-0377-50	MA4100M
D202	001-0377-42	MA4075H
L101	010-2272-07	COIL
L102	010-2272-08	COIL
L103	007-1156-00	TRANS
L104	007-1157-00	TRANS
L201	010-2272-03	RCH110-10
Q101	102-3303-00	2SC3303
Q102	102-3303-00	2SC3303

REF No.	PART No.	DESCRIPTION
Q103	192-3669-00	2SC3669-Q,Y-TPF2
Q104	192-3669-00	2SC3669-Q,Y-TPF2
Q201	102-3420-50	2SC3420GR,BL
Q202	102-3420-50	2SC3420GR,BL
R101	111-2731-91	1/4WS 27kΩ
R102	119-7521-10	1/16W 7.5kΩ
R103	119-7521-10	1/16W 7.5kΩ
R104	119-7521-10	1/16W 7.5kΩ
R105	119-7521-10	1/16W 7.5kΩ
R106	119-1631-10	1/16W 16kΩ
R107	119-1631-10	1/16W 16kΩ
R201	111-3311-91	1/4WS 330Ω
R202	111-3311-91	1/4WS 330Ω

Switch PWB(B3) section

REF No.	PART No.	DESCRIPTION
C701	168-1522-05	1500pF
C702	166-1011-00	100pF
C703	043-0318-00	5600pF
C713	043-0318-00	5600pF
C721	168-1522-05	1500pF
C722	166-1011-00	100pF
C723	168-1042-78	0.1 μF
C724	043-0265-00	470pF
C725	183-4763-11	6.3V47 μF
C726	168-1022-05	1000pF
C727	168-1022-05	1000pF
C728	168-1042-78	0.1 μF
D701	001-0516-00	MA111
D702	001-0516-00	MA111
D703	001-0516-00	MA111
D704	001-0516-00	MA111
D705	001-0516-00	MA111
D706	001-7040-01	NSCW100
D707	001-7040-01	NSCW100
D708	001-7040-01	NSCW100
D709	001-7040-01	NSCW100
FL701	379-4033-24	VFD
IC701	051-6029-00	μPD16306B
IC702	051-6618-08	M66006FP-41A

REF No.	PART No.	DESCRIPTION
IR701	060-4005-00	IR-RECEIVER
J701	074-1105-22	22P
L701	010-2174-28	220 μH
PL701	017-0444-00	14V 50mA
R701	119-1031-10	1/16W 10kΩ
R702	119-1031-10	1/16W 10kΩ
R703	119-1031-10	1/16W 10kΩ
R704	119-1031-10	1/16W 10kΩ
R705	119-1031-10	1/16W 10kΩ
R706	119-1041-10	1/16W 100kΩ
R707	119-1041-10	1/16W 100kΩ
R708	119-1041-10	1/16W 100kΩ
R709	119-1041-10	1/16W 100kΩ
R710	119-1041-10	1/16W 100kΩ
R711	119-1031-10	1/16W 10kΩ
R712	119-8201-10	1/16W 82Ω
R713	119-2231-10	1/16W 22kΩ
R714	032-0104-00	1/4W 560Ω
R715	032-0104-00	1/4W 560Ω
R718	119-1021-10	1/16W 1kΩ
R719	119-2421-10	1/16W 2.4kΩ
R720	119-2021-10	1/16W 2kΩ
S701	013-6001-50	SKQCAB
S702	013-6001-50	SKQCAB

REF No.	PART No.	DESCRIPTION
S703	013-6001-50	SKQCAB
S704	013-6001-50	SKQCAB
S705	013-6001-50	SKQCAB
S707	013-6001-50	SKQCAB
S708	013-6001-50	SKQCAB
S709	013-6001-50	SKQCAB
S710	013-6001-50	SKQCAB
S711	013-6001-50	SKQCAB
S712	013-6001-50	SKQCAB
S713	013-6001-50	SKQCAB
S714	013-6001-50	SKQCAB
S715	013-6001-50	SKQCAB
S717	013-6001-50	SKQCAB
S718	013-6305-50	SKQMAH
S719	013-6305-50	SKQMAH
S720	013-6305-50	SKQMAH
S722	013-6001-50	SKQCAB
S723	013-6001-50	SKQCAB
S724	013-6001-50	SKQCAB
S725	013-6001-50	SKQCAB
S726	013-6001-50	SKQCAB
VR701	016-9900-79	VR

Tape mechanism/Side PWB(B4) section

REF No.	PART No.	DESCRIPTION
C1	175-3311-00	330pF CH
C2	175-3311-00	330pF CH
C3	175-3311-00	330pF CH
C4	175-3311-00	330pF CH
C5	183-4763-11	6.3V47 μF
C6	042-0552-02	10V68 μF
C7	042-0552-02	10V68 μF
C8	173-1231-10	0.012 μF J
C9	173-1231-10	0.012 μF J
C10	183-4753-51	35V4.7 μF
C11	183-1043-61	50V0.1 μF
C12	175-5611-00	560pF CH

REF No.	PART No.	DESCRIPTION
C13	183-4743-61	50V0.47 μF
C14	183-2263-31	16V22 μF
C15	183-4753-51	35V4.7 μF
C16	183-4753-51	35V4.7 μF
IC1	051-1546-10	BA3430S
J1	074-0881-08	8P
R1	111-1241-91	1/4WS 120kΩ
R2	111-1241-91	1/4WS 120kΩ
R3	111-1241-91	1/4WS 120kΩ
R4	111-1241-91	1/4WS 120kΩ
R5	116-1011-10	1/8W 100Ω
R6	116-1011-10	1/8W 100Ω

REF No.	PART No.	DESCRIPTION
R7	117-3341-10	1/10W 330kΩ
R8	117-1131-10	1/10W 11kΩ
R9	117-1531-10	1/10W 15kΩ
R10	117-1531-10	1/10W 15kΩ
R11	117-1131-10	1/10W 11kΩ
R12	117-3341-10	1/10W 330kΩ
R13	117-1811-10	1/10W 180Ω
R14	117-8211-10	1/10W 820Ω
R15	116-2231-10	1/8W 22kΩ
R16	117-1031-10	1/10W 10kΩ
R17	117-1031-10	1/10W 10kΩ

Rear PWB(B5) section

REF No.	PART No.	DESCRIPTION
C102	178-1042-78	0.1 μF
C103	163-4763-30	16V47 μF
C107	163-1053-60	50V1 μF
C108	163-1053-60	50V1 μF
C109	163-4763-30	16V47 μF
C110	163-2263-30	16V22 μF
C111	043-0296-50	0.1 μF
C112	043-0296-50	0.1 μF

REF No.	PART No.	DESCRIPTION
C113	163-4753-50	35V4.7 μF
C116	163-4763-30	16V47 μF
IC101	051-5202-00	CCCAX1552M
IC102	051-1014-05	TA7291F
P101	076-0353-08	8P
Q107	125-2004-03	RN1403
R101	117-1831-10	1/10W 18kΩ
R102	117-1031-10	1/10W 10kΩ

REF No.	PART No.	DESCRIPTION
R103	117-2221-10	1/10W 2.2kΩ
R105	117-1031-10	1/10W 10kΩ
R106	117-1031-10	1/10W 10kΩ
R107	116-2711-10	1/8WS 270Ω
S101	013-3906-00	STMR17
VR101	012-4318-06	10kΩ VR
VR102	012-4318-06	10kΩ VR

Bottom PWB(B6) section

REF No.	PART No.	DESCRIPTION
REF301	051-1776-00	NJL5801K-C

REF No.	PART No.	DESCRIPTION
SW301	013-3953-01	SPPB32

REF No.	PART No.	DESCRIPTION
SW302	013-3951-00	HMW0605

CD mechanism/CD PWB(B7) section

REF No.	PART No.	DESCRIPTION
C1	163-1073-10	6.3V100 μF
C3	178-1042-78	0.1 μF
C4	178-2222-78	2200pF
C5	178-1042-78	0.1 μF
C6	178-1042-78	0.1 μF
C7	178-1042-78	0.1 μF
C8	176-1501-00	15pF CH
C9	176-1501-00	15pF CH
C10	176-1201-00	12pF CH
C11	178-1042-78	0.1 μF
C13	178-1042-78	0.1 μF
C14	178-1042-78	0.1 μF
C15	178-1042-78	0.1 μF
C16	178-1042-78	0.1 μF

REF No.	PART No.	DESCRIPTION
C17	163-1073-31	16V100 μF
C18	176-4701-00	47pF CH
C19	178-1532-78	0.015 μF
C20	178-1032-78	0.01 μF
C21	178-2722-78	2700pF
C22	178-4722-78	4700pF
C23	178-1042-78	0.1 μF
C24	178-1042-78	0.1 μF
C25	178-1042-78	0.1 μF
C26	178-4712-78	470pF
C27	178-4712-78	470pF
C28	178-4732-78	0.047 μF
C29	178-4732-78	0.047 μF
C30	178-4732-78	0.047 μF

REF No.	PART No.	DESCRIPTION
C31	178-4732-78	0.047 μF
C32	163-4763-05	4V47 μF
C33	163-4763-05	4V47 μF
C34	176-1801-00	18pF CH
C35	176-6097-00	6pF CH
C36	176-6801-00	68pF CH
C37	176-2201-00	22pF CH
C38	178-1042-78	0.1 μF
C39	163-4763-05	4V47 μF
C44	178-2242-78	0.22 μF
C45	178-2242-78	0.22 μF
C46	163-4763-10	6.3V47 μF
C47	178-8222-78	8200pF
C48	178-1042-78	0.1 μF

REF No.	PART No.	DESCRIPTION
C50	163-1073-10	6.3V100 μF
C51	178-1042-78	0.1 μF
C52	178-2232-78	0.022 μF
C54	176-2201-00	22pF CH
C61	178-1042-78	0.1 μF
C63	178-1042-78	0.1 μF
C64	178-1042-78	0.1 μF
C65	178-1042-78	0.1 μF
D4	001-0516-00	MA111
IC1	051-5704-00	TA2096FN
IC2	051-6342-00	TC9462F
IC3	051-6045-08	BA5984FP
J1	074-1138-66	16P
J2	074-1138-06	6P
L1	010-2155-93	10 μH
L3	010-2199-74	10 μH J
Q1	101-1188-50	2SB1188PQR
R1	117-2211-10	1/10W 220Ω
R2	117-2211-10	1/10W 220Ω

REF No.	PART No.	DESCRIPTION
R3	117-5611-10	1/10W 560Ω
R4	117-5611-10	1/10W 560Ω
R5	117-4711-10	1/10W 470Ω
R6	117-3311-10	1/10W 330Ω
R7	117-4721-10	1/10W 4.7kΩ
R8	117-1041-10	1/10W 100kΩ
R9	117-1031-10	1/10W 10kΩ
R10	117-4731-10	1/10W 47kΩ
R12	117-4741-10	1/10W 470kΩ
R13	117-3331-10	1/10W 33kΩ
R14	117-3321-10	1/10W 3.3kΩ
R15	117-1031-10	1/10W 10kΩ
R16	117-3321-10	1/10W 3.3kΩ
R17	117-3321-10	1/10W 3.3kΩ
R18	117-3321-10	1/10W 3.3kΩ
R19	117-3321-10	1/10W 3.3kΩ
R20	117-3321-10	1/10W 3.3kΩ
R21	117-2221-10	1/10W 2.2kΩ
R22	117-8211-10	1/10W 820Ω

REF No.	PART No.	DESCRIPTION
R23	117-9131-10	1/10W 91kΩ
R24	117-1041-10	1/10W 100kΩ
R25	117-1041-10	1/10W 100kΩ
R26	117-1841-10	1/10W 180kΩ
R27	117-1841-10	1/10W 180kΩ
R28	117-2211-10	1/10W 220Ω
R29	117-2201-10	1/10W 22Ω
R30	117-1041-10	1/10W 100kΩ
R31	117-1041-10	1/10W 100kΩ
R32	117-1041-10	1/10W 100kΩ
R33	117-1041-10	1/10W 100kΩ
R34	117-1041-10	1/10W 100kΩ
R35	117-2241-10	1/10W 220kΩ
R36	117-1041-10	1/10W 100kΩ
R37	117-1041-10	1/10W 100kΩ
R38	117-8231-10	1/10W 82kΩ
R39	117-1841-10	1/10W 180kΩ
X1	061-3500-90	16.920MHz

Sensor PWB(B8) section

REF No.	PART No.	DESCRIPTION
Q101	060-0252-01	PT4850F

REF No.	PART No.	DESCRIPTION
Q102	060-0252-01	PT4850F

REF No.	PART No.	DESCRIPTION
Q103	060-0252-01	PT4850F

Chucking SW PWB(B9) section

REF No.	PART No.	DESCRIPTION
S2	013-3879-01	SPPB12

Limit SW PWB(B10) section

REF No.	PART No.	DESCRIPTION
S1	013-7100-00	SPPB11

■CIRCUIT DIAGRAM

DD-CON PWB(B2) section

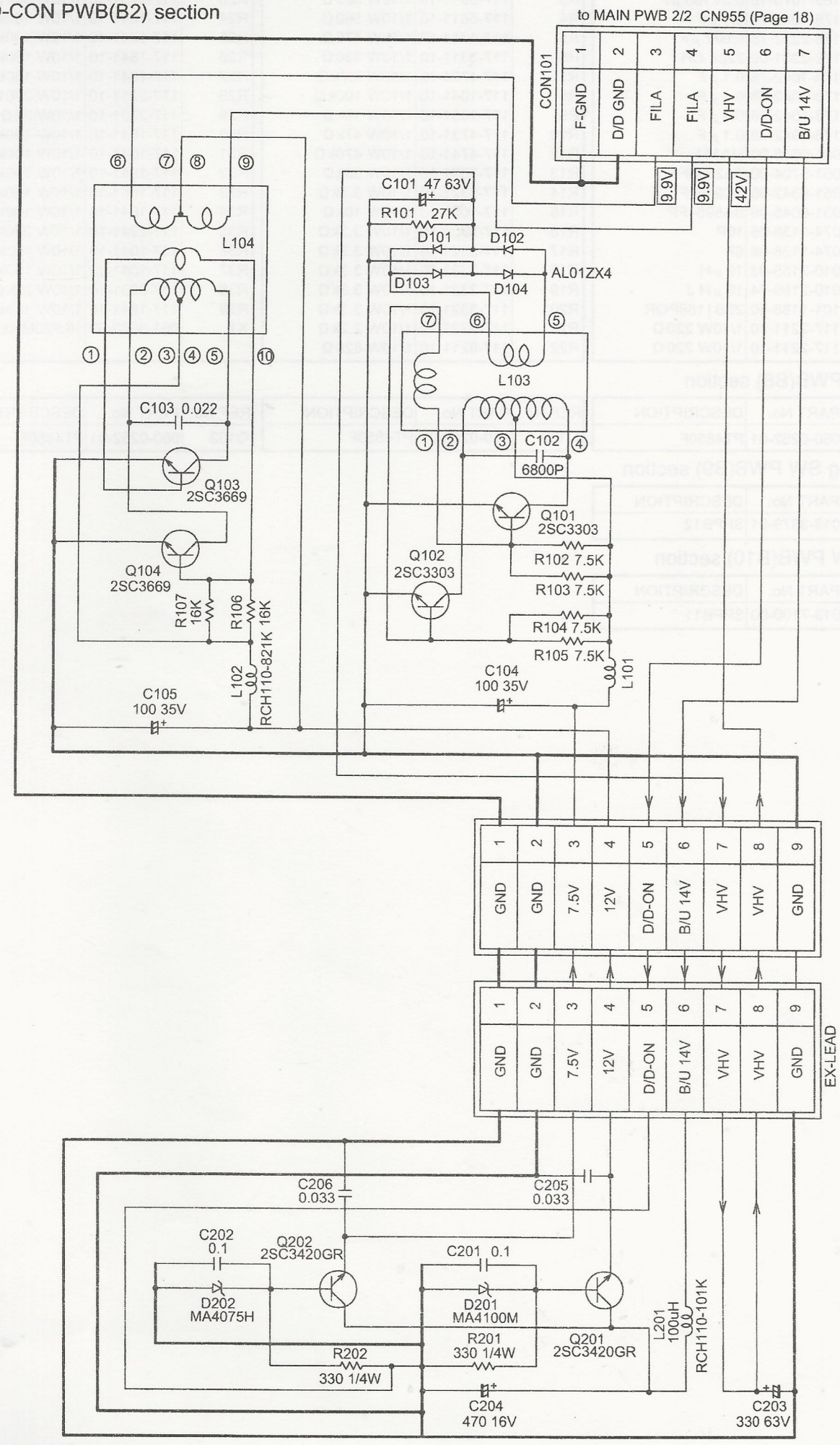

Main PWB 1/2 (B1) section

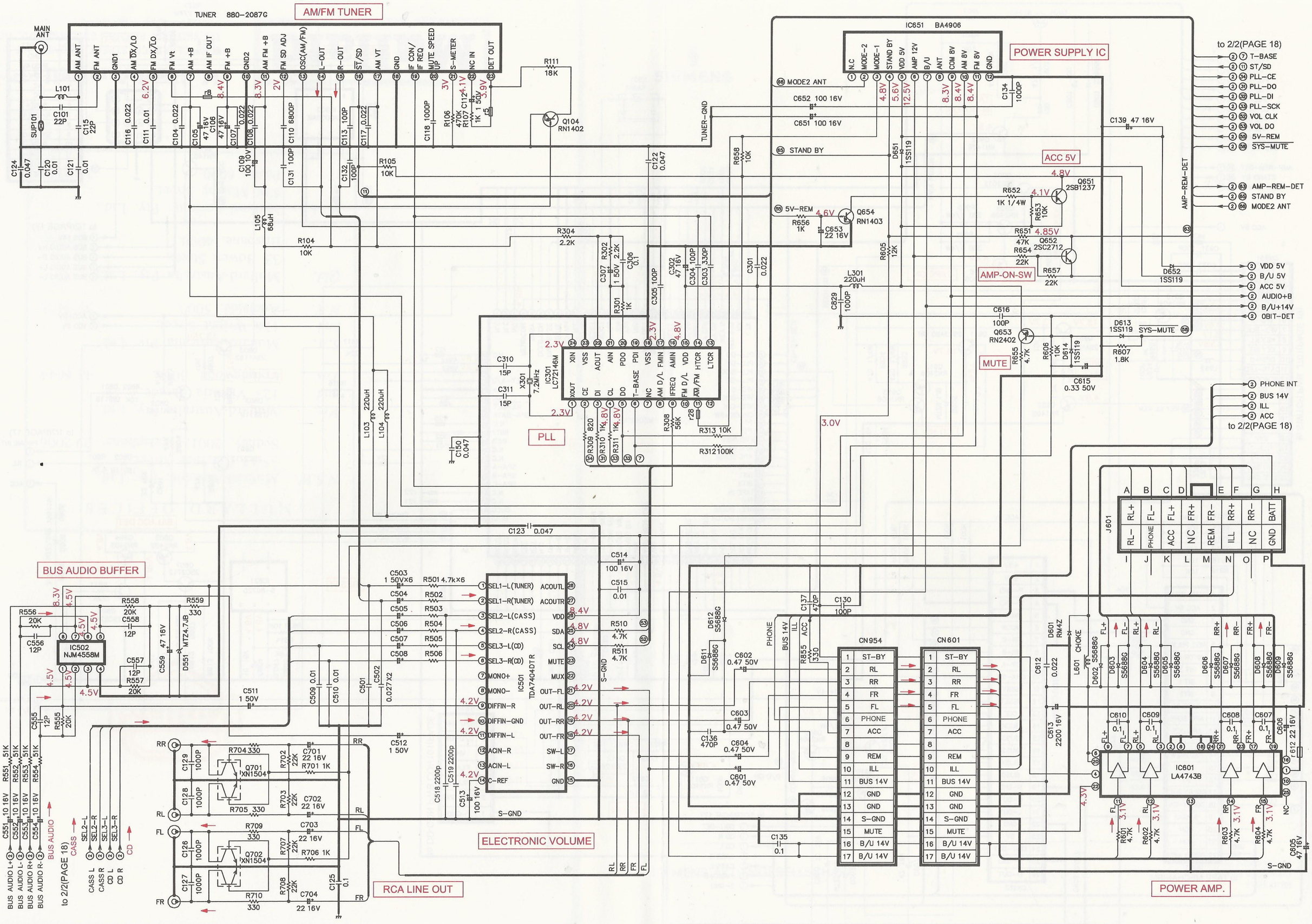

ADX6655z

Main PWB 2/2 (B1) section

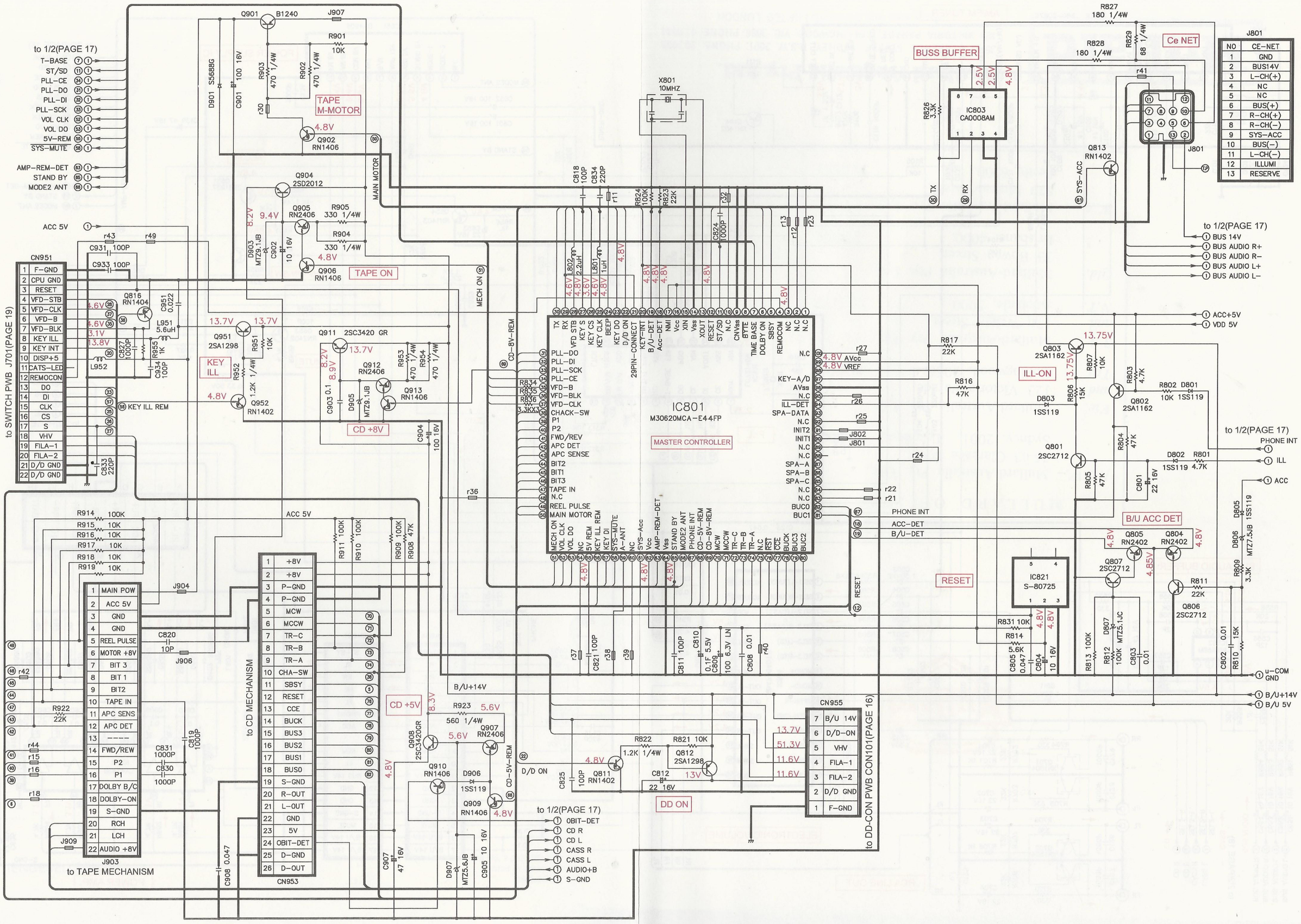

ADX6655z

Switch PWB (B3) section

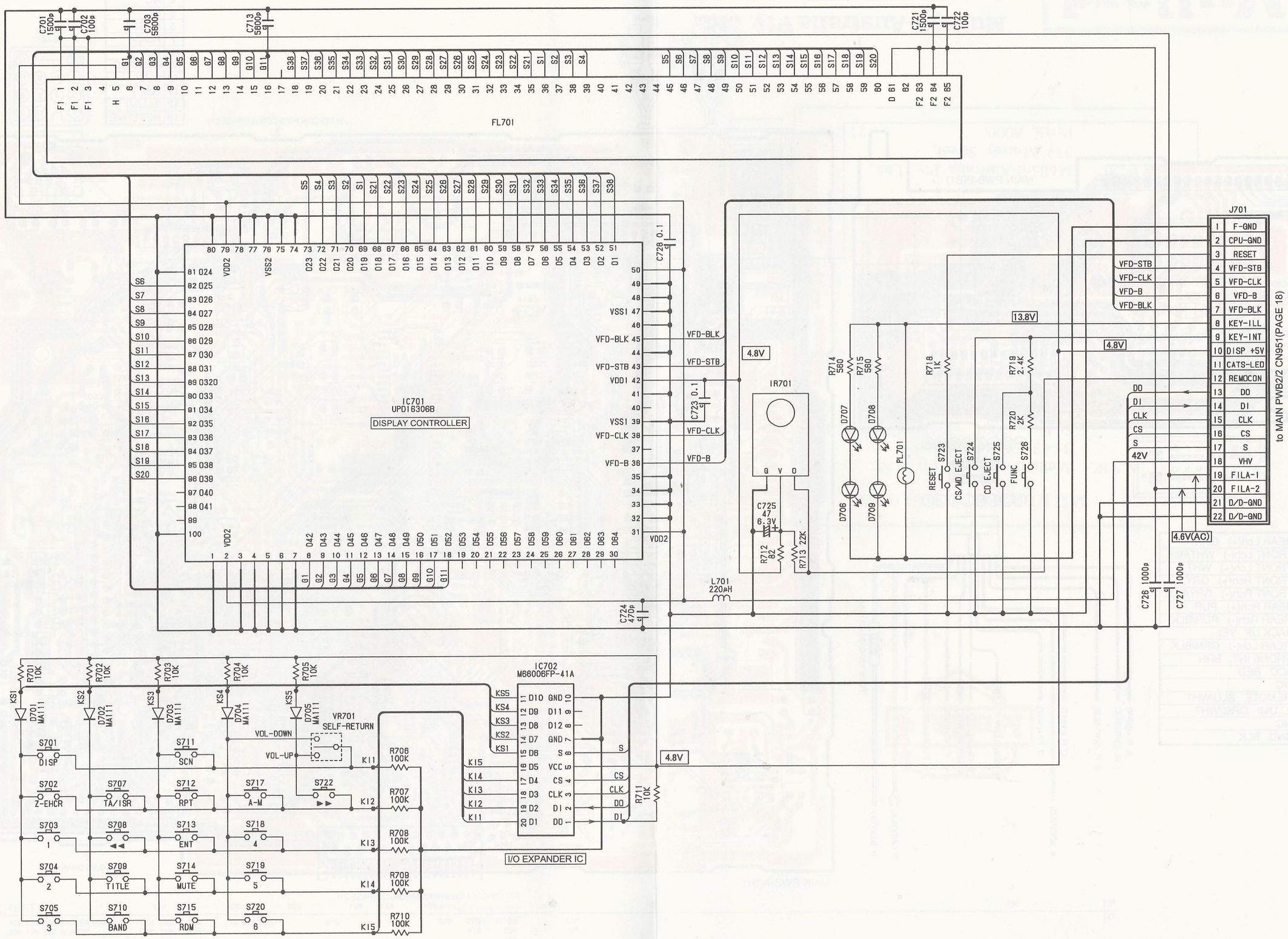

ADX6655z

■ PRINTED WIRING BOARD

Main PWB(B1) section

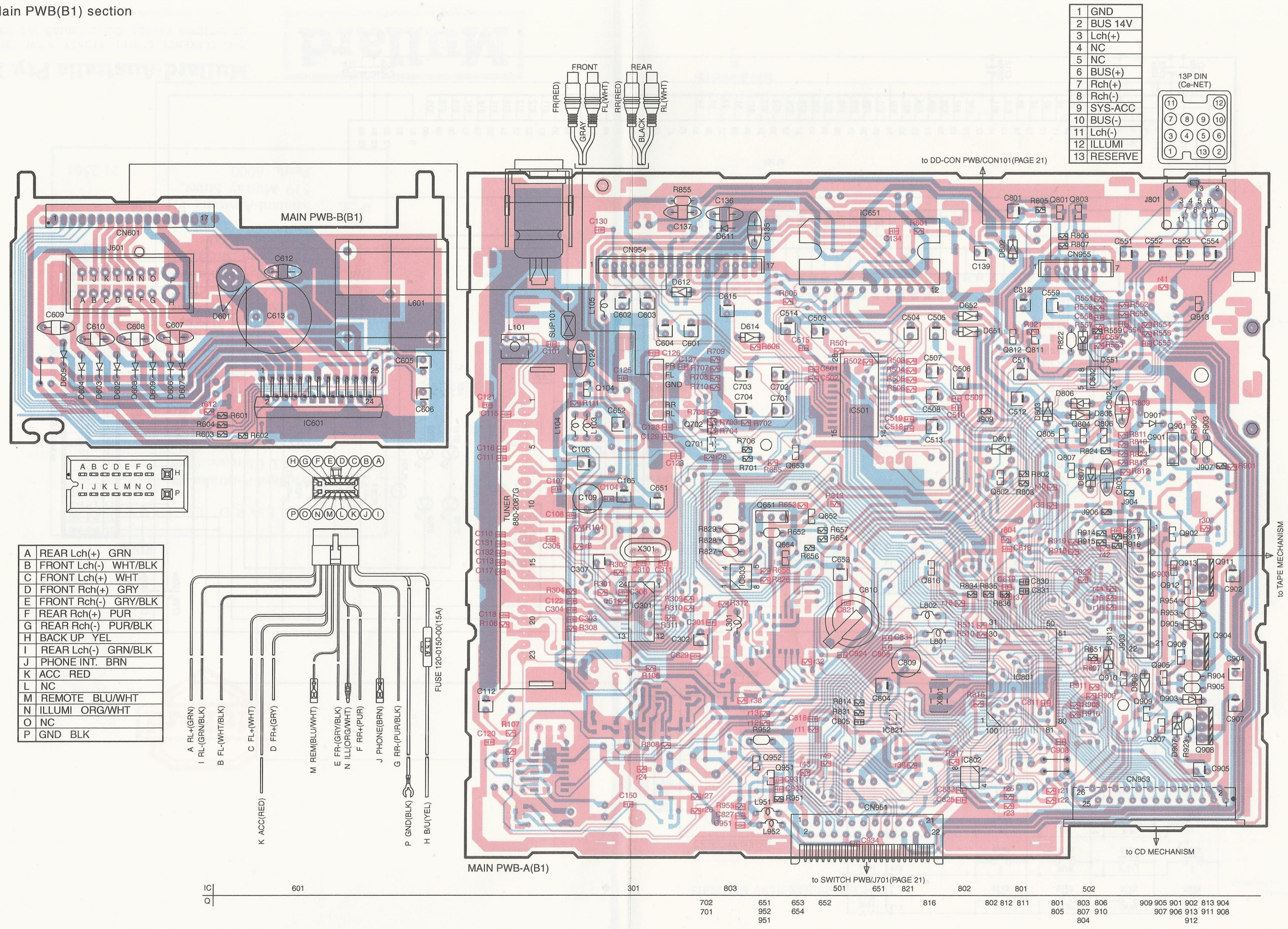

1	GND
2	BUS 14V
3	Lch(+)
4	NC
5	NC
6	BUS(+)
7	Rch(+)
8	Rch(-)
9	SYS-ACC
10	BUS(-)
11	Lch(-)
12	ILLUMI
13	RESERVE

A	REAR Lch(+) GRN
B	FRONT Lch(-) WHT/BLK
C	FRONT Lch(+) WHT
D	FRONT Rch(+) GRY
E	FRONT Rch(-) GRY/BLK
F	REAR Rch(+) PUR
G	REAR Rch(-) PUR/BLK
H	BACK UP YEL
I	REAR Lch(-) GRN/BLK
J	PHONE INT. BRN
K	ACC RED
L	NC
M	REMOTE BLU/WHT
N	ILLUMI ORG/WHT
O	NC
P	GND BLK

ADX6655z

■ PRINTED WIRING BOARD

DD-CON PWB(B2) / Swicth PWB(B3) section

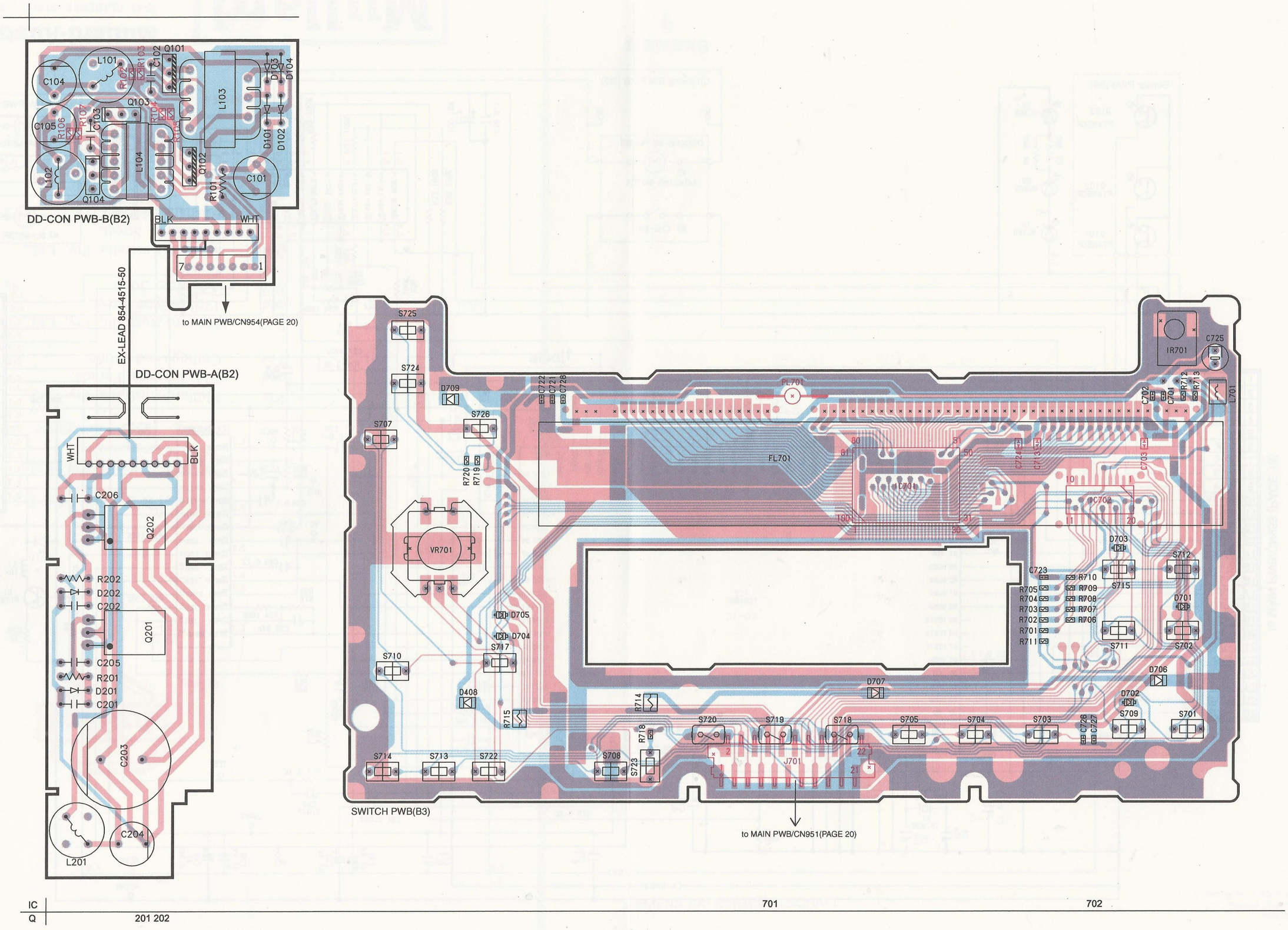

ADX6655z

■CIRCUIT DIAGRAM

CD mechanism (B7 to B10) section

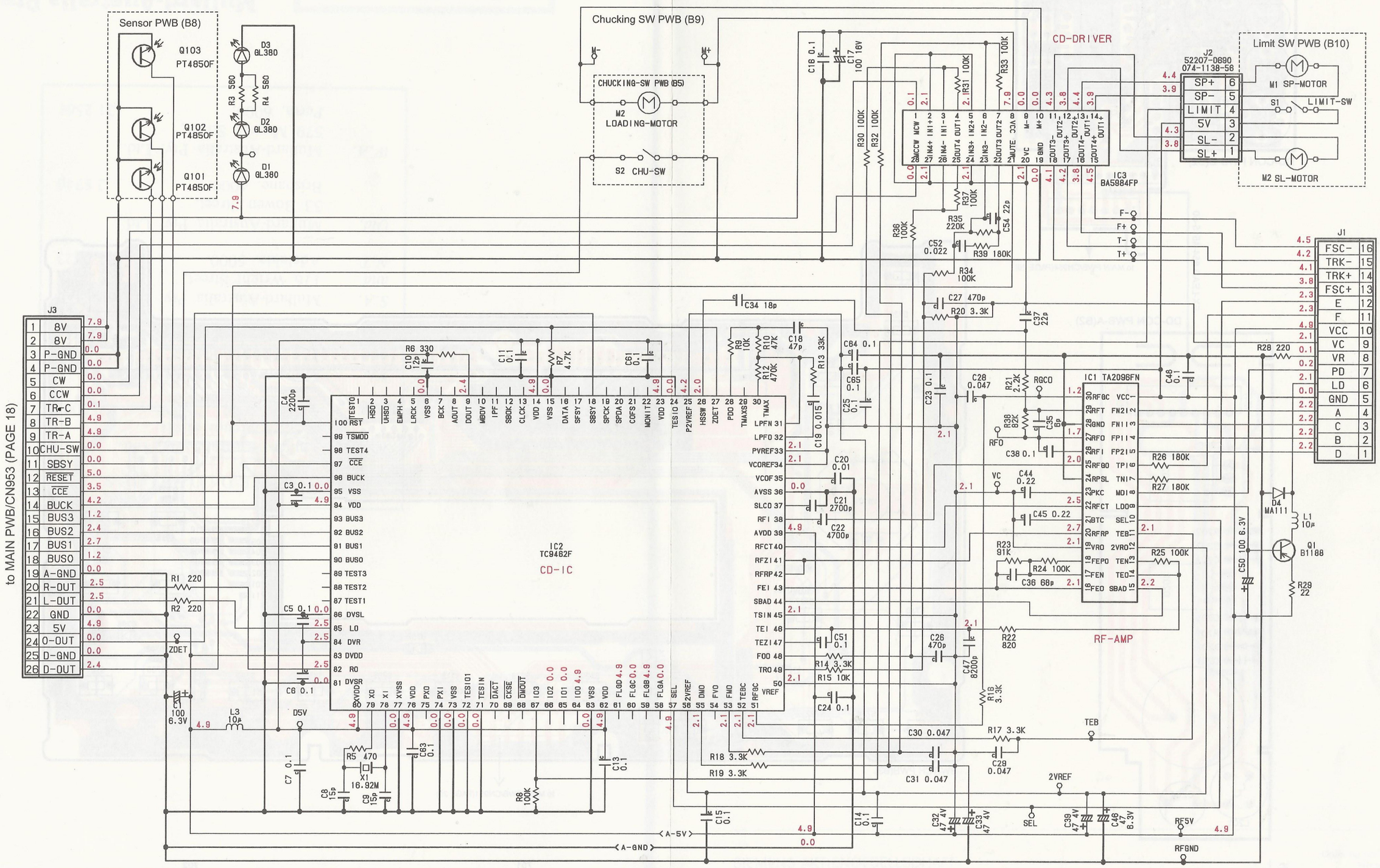

ADX6655z

■PRINTED WIRING BOARD

CD mechanism (B7 to B10) section

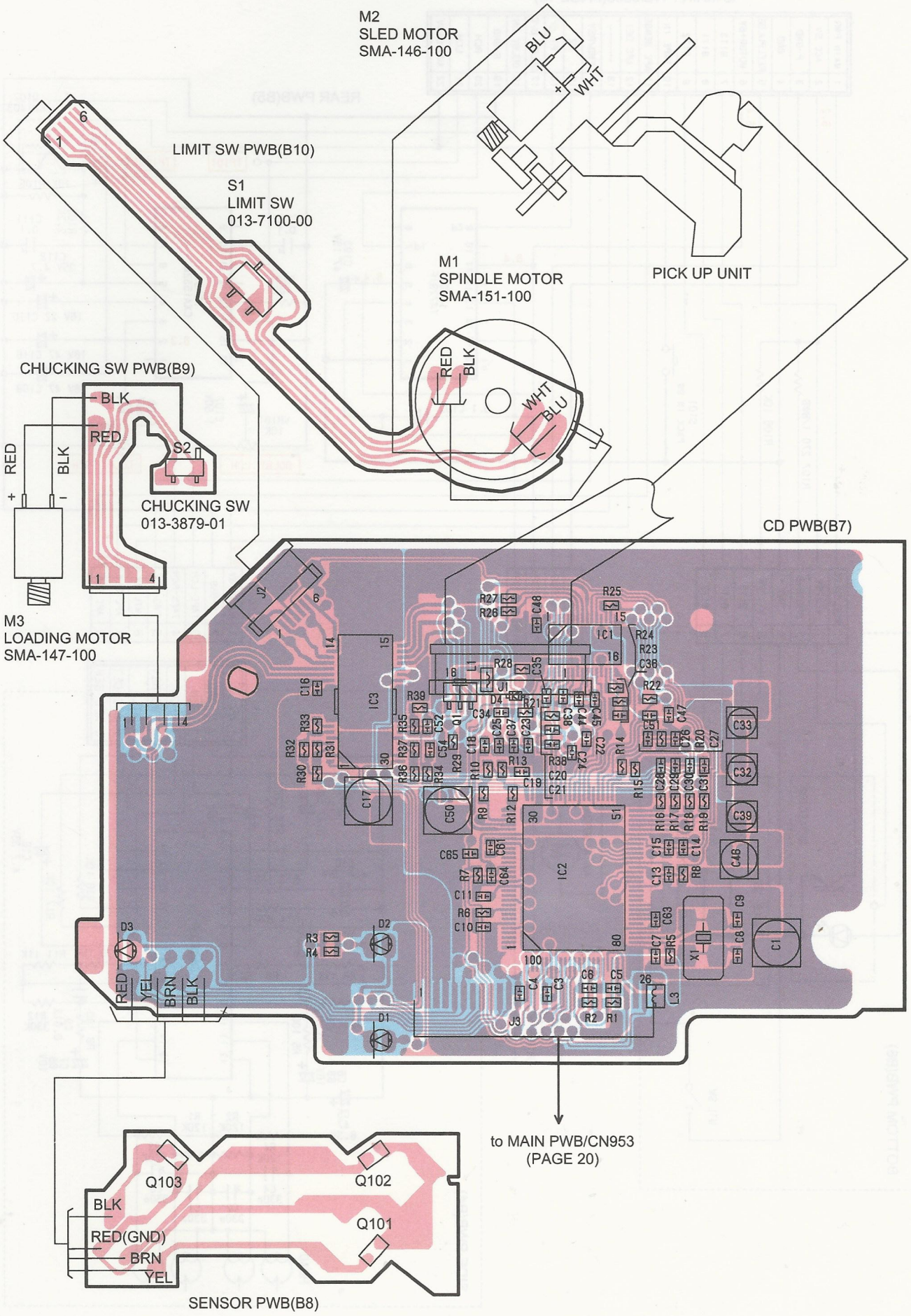

CIRCUIT DIAGRAM

Tape mechanism (B4 to B6) section

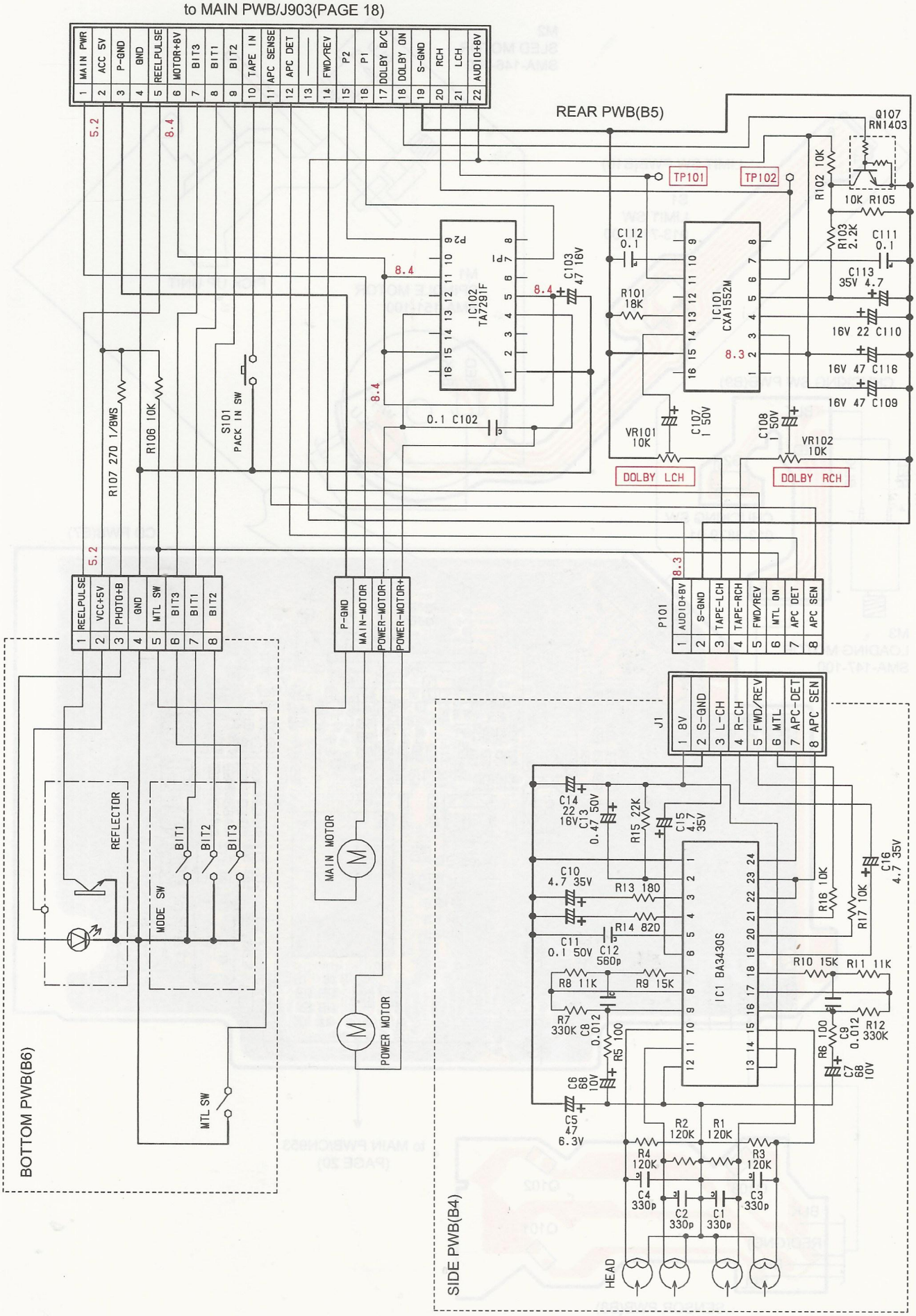

■ PRINTED WIRING BOARD

Tape mechanism(B4 to B6) section