MODEL

AC969

Service
Service
Service

# Service Manual

## FULL AUTO REVERSE CASSETTE PLAYER WITH LCD DIGITAL DISPLAY PLL FREQUENCY SYNTHESIZER(LW)/MW/FM/FM-STEREO TUNING RADIO

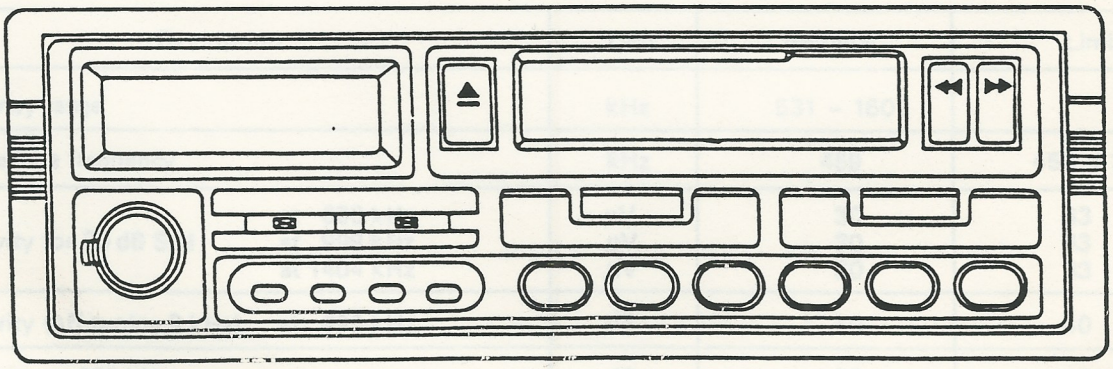

# SPECIFICATIONS

General Section

| | |
|---|---|
| Power supply: | 11 – 16 Volts |
| Ground polarity: | Negative (–) |

LW Section

| | Description | | Unit | Nominal | Limit |
|---|---|---|---|---|---|
| 1. | Frequency range | | kHz | 153 – 281 | |
| 2. | Intermediate frequency | | kHz | 459 | ± 3 |
| 3. | Sensitivity for 20 dB S/N | at 164 kHz<br>at 218 kHz<br>at 272 kHz | µV<br>µV<br>µV | 63<br>63<br>63 | 200<br>200<br>200 |
| 4. | Selectivity (off-tuning 9 kHz) | at 218 kHz | dB | 60 | 40 |
| 5. | If rejection at 218 kHz | | dB | 55 | 45 |
| 6. | Image rejection at 218 kHz | | dB | 40 | 30 |
| 7. | Bandwidth at 6 dB at 218 kHz | | kHz | 7 | 7 ± 3 |
| 8. | S/N with 5 mV at 218 kHz | | dB | 50 | 40 |
| 9. | Distortion at 500 mW input 5 mV | | % | 1 | 3 |
| 10. | Power output | 10% distortion<br>maximum | W<br>W | 16 x 2<br>22 x 2 | 12 x 2<br>16 x 2 |
| 11. | Seek lock-in sensitivity | | µV | 100 | 63 – 600 |

MW Section

| | Description | | Unit | Nominal | Limit |
|---|---|---|---|---|---|
| 1. | Frequency range | | kHz | 531 – 1602 | |
| 2. | Intermediate frequency | | kHz | 459 | 459 ± 3 |
| 3. | Sensitivity for 20 dB S/N | at 603 kHz<br>at 999 kHz<br>at 1404 kHz | µV<br>µV<br>µV | 30<br>30<br>30 | 63<br>63<br>63 |
| 4. | Selectivity (off-tuning 9 kHz) | at 999 kHz | dB | 60 | 40 |
| 5. | If rejection at 603 kHz | | dB | 50 | 40 |
| 6. | Image rejection | at 603 kHz<br>at 1404 kHz | dB<br>dB | 70<br>50 | 60<br>40 |
| 7. | Bandwidth at 6 dB at 999 kHz | | kHz | 7 | 7 ± 3 |
| 8. | S/N with 5 mV at 999 kHz | | dB | 50 | 40 |
| 9. | Distortion at 500 mW input 5 mV | | % | 1 | 3 |
| 10. | Power output | 10% distortion<br>maximum | W<br>W | 16 x 2<br>22 x 2 | 12 x 2<br>16 x 2 |
| 11. | Seek lock-in sensitivity | | µV | 100 | 60 – 180 |

(FM) Section

| | Description | | Unit | Nominal | Limit |
|---|---|---|---|---|---|
| 1. | Frequency range | | MHz | 87.5 – 108.0 | 87.5 ± 0.05<br>108.0 ± 0.05 |
| 2. | Intermediate frequency | | MHz | 10.7 | 10.7 ± 0.05 |
| 3. | Sensitivity for dB S/N | at 90 MHz<br>at 98 MHz<br>at 106 MHz | µV<br>µV<br>µV | 2<br>2<br>2 | 6<br>6<br>6 |
| 4. | IF rejection at 90 MHz | | dB | 70 | 60 |
| 5. | Image rejection at 106 MHz | | dB | 50 | 40 |
| 6. | S/N with 1 mV input at 98 MHz unweighted | | dB | 60 | 50 |
| 7. | Distortion at 500mW | 40 kHz dev.<br>75 kHz dev. | %<br>% | 0.8<br>2 | 1.5<br>3 |
| 8. | Selectivity at 98 MHz 35 dB input ± 300 KHz | | dB | 50 | 40 |
| 9. | Power output | 10% distortion<br>maximum | W<br>W | 16 x 2<br>22 x 2 | 12 x 2<br>16 x 2 |
| 10. | Seek lock-in sensitivity | DX<br>LOCAL | µV<br>µV | 10<br>100 | 5 – 15<br>80 – 150 |

## FM STEREO Section

| Description | Unit | Nominal | Limit |
|---|---|---|---|
| 1. Separation with 1 mV input at 400 Hz<br>at 1000 Hz<br>at 6300 Hz | dB<br>dB<br>dB | 35<br>35<br>30 | 25<br>25<br>20 |
| 2. Stereo lock level at 98 MHz | μV | 25 | 20 – 80 |
| | | | |
| 4. Stereo indicator sensitivity at 98 MHz | μV | 5 | 10 |

## TAPE Section

| Description | TEAC Test Tape | Unit | Nominal | Limit |
|---|---|---|---|---|
| 1. S/N at 1000 Hz 500 mW | MTT-112B | dB | 50 | 45 |
| 2. | | | | |
| 3. Crosstalk at 1000 Hz | MTT-121 | dB | 40 | 30 |
| 4. Channel separation at 1000 kHz | MTT-141 | dB | 40 | 30 |
| 5. Playback frequency response 1000 Hz = 0 –4.5 dB down frequency range | MTT-256 | Hz | 50 – 12500 | 100 – 10000 |
| 6. WOW & Flutter at 3000 Hz | MTT-111 | % | 0.3 | 0.5 |
| 7. Tape speed at 3000 Hz | MTT-111 | % | 0 | ±3 |
| 8. Power output at 1000 Hz 10% distortion maximum | MTT-112B | W | 16 x 2<br>22 x 2 | 12 x 2<br>16 x 2 |
| 9. Distortion at 500mW at 1000 Hz | MTT-118 | % | 1 | 3 |

NOTE: Nominal specs represent the design specs; all units should be able to approximate these — some will exceed and some may drop slightly below these specs. Limit specs represent the absolute worst condition which still might be considered acceptable; in no case should a unit perform to less than within any limit spec.

NOTE: Connect a FM dummy antenna between FM signal generator and antenna receptacle, regarding relationship between a signal output level and a reading of the signal generator.
(1) Count directly a reading of the attenuator, in case the output of the signal generator is "Load type".
(2) Count 1/2 of a reading of the attenuator, in case the output of the signal generator is "Open type".

(B) FM MPX alignment
(1) Connect a digital frequency counter to TP102 and common ground, and connect a 560 kΩ ~ 1 MΩ and common ground. Then, adjust SVR 102 to read 19 kHz ± 50 Hz on the digital frequency counter.
(2) Connect the FM signal generator and stereo modulator. And set the stereo modulator to 6 kHz deviation (8%) fo pilot signal (19 kHz) and 0 kHz deviation for main signal and FM signal generator to 98,000 MHz, 1mV.
(3) Adjust SVR 103 (Pilot canceling) to obtain the minimum indication of the AF millivolt meter.
(4) Set the stereo modulator to 6 kHz deviation (8%) for pilot signal and 75 kHz deviation (100% for L + R main signal, and FM signal generator to 98,000 MHz, 1mV.
(5) Turn mode selector of the stereo modulator to L or R and adjust SVR 102 (separation) for the maximum separation.

TAPE SECTION (See figure 5, 6.)
**Equipment Required**

1. AF voltage meter
2. power supply (DC 14V)
3. LEVEL (MTT-112B) test tape and 1 KHz test tape
4. DC millivolt meter

NOTE: The head must be cleaned degaussed before any adjusting.

(A) HEAD AZIMUTH alignment
(1) Connect AF voltage meter to the speaker output and playback 8 kHz test tape.
(2) Adjust volume control to medium position, and as shown in Fig. 6, adjust the head azimuth alignment screw with a ⊕ driver for the maximum output.
(3) Make sure the reverse position.

**Fig. 1 Dummy antenna for MW and LW alignment**

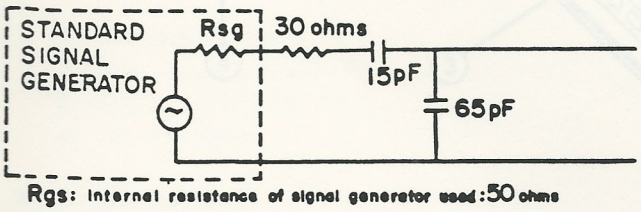


Rgs: Internal resistance of signal generator used: 50 ohms

**Fig. 2 Dummy antenna for FM RF alignment**

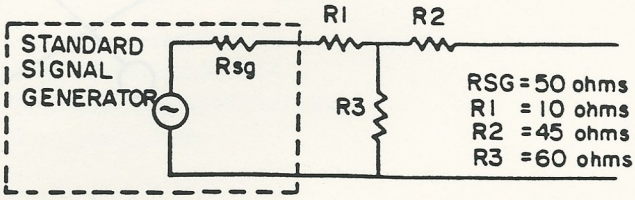


Rsg: Internal restance of SSG

# DISASSEMBLY

TOP METAL CASING

1. CABINET
2. SET
3. HANDLE
4. ACC'Y KEY

Please Release A Locking Part
Between I And 2 By Ass'y Key
And Pull The Set Out.

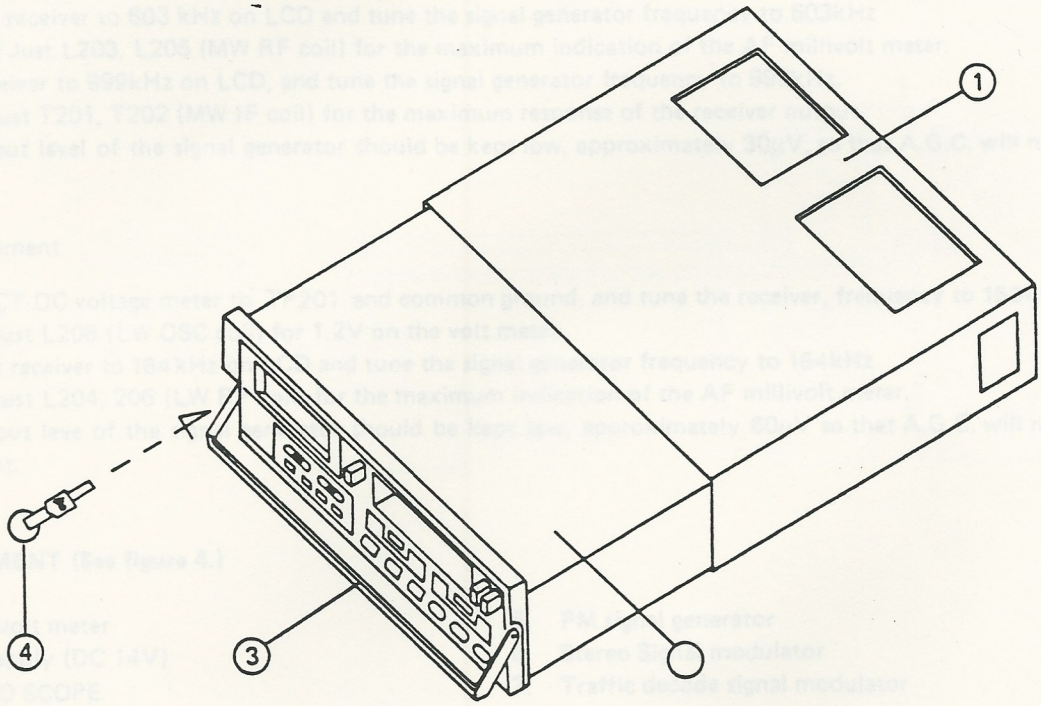

# ALIGNMENT PROCEDURES

RADIO SECTION

1. AF milivoit meter
2. Power Supply (DC14.4V)
3. OSCILLO SCOPE
4. MW signal generator
5. DC volt meter

**1. LW, MW, ALIGNMENT (See figure 3.)**

(A) WM band ALIGNMENT

(1) Conect DC voltage meter to TP201 and common ground, and tune the receiver frequency to 531kHz on LCD. Tune adjust L207 (MW OSC coil) for 1.2V

(2) Connect AF milivolt meter to the speaker output of either channel, and MW signal generator output to the antenna reception through a matching pad shown in fig 1.

(3) Tune the receiver to 603 kHz on LCD and tune the signal generator frequency to 603kHz Then AD Just L203, L205 (MW RF coil) for the maximum indication of the AF millivolt meter.

(4) Tune receiver to 999kHz on LCD, and tune the signal generator frequency to 999kHz. Tune adjust T201, T202 (MW IF coil) for the maximum response of the receiver output. The output level of the signal generator should be kept low, approximately 30μV, so that A.G.C. will not aftect the align.

(B) LW band aignment

(1) CONNECT DC voltage meter to TP201 and common ground, and tune the receiver, frequency to 153kHz on LCD. Then adjust L208 (LW OSC coil) for 1.2V on the volt meter.

(2) Tune the receiver to 164kHz on LCD and tune the signal generator frequency to 164kHz Then adjust L204, 206 (LW RF coil) for the maximum indication of the AF millivolt meter. The output leve of the signal generator should be kept low, approximately 60μV so that A.G.C. will not affect the alignment.

**2. FM ALIGNMENT (See figure 4.)**

1. AF millivolt meter
2. Power supply (DC 14V)
3. OSCILLO SCOPE
4. DC volt meter
5. FM signal generator
6. Stereo Signal modulator
7. Traffic decode signal modulator
8. Frequency cunter

(A) IF ALIGNMENT

(1) Connect AF millivolt meter to the speaker output of either channel, and FM signal generator output to the antennare output through a matching pad shown in Fig 2.

(2) Tune the receiver to 98,000MHz on LCD, and tune the signal generator frequency to 98,000MHz. Then adjust FM Tuner (IFT) for the maximum indication of the AF millivolt meter.

(3) Set the output lever of FM signal generator to 100μV.

(4) Connect the DC voltage meter to IC101 7 PIN and 13 PIN adjust T101 (DET coil for the minimum indication of the DC voltagemeter.

(5) At MONO(DX) position, adjust SVR101 make seek in sensitivity of 5μV-15μV (nomina 10μV)

Fig. 3

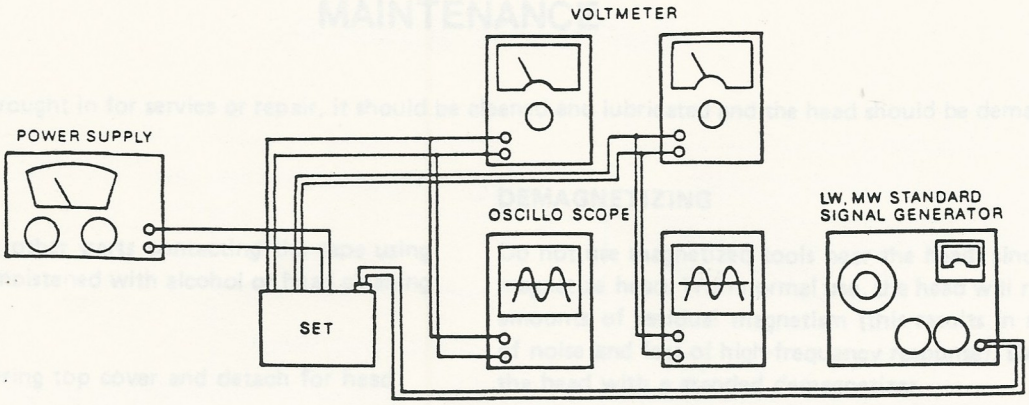


Fig. 4

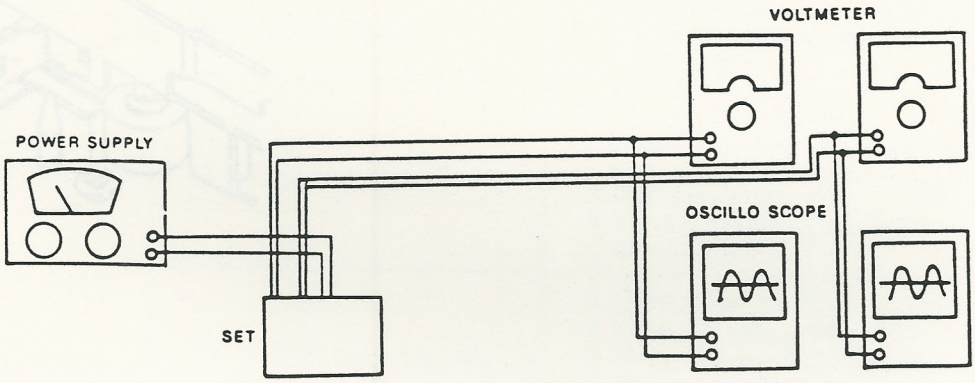


Fig. 5

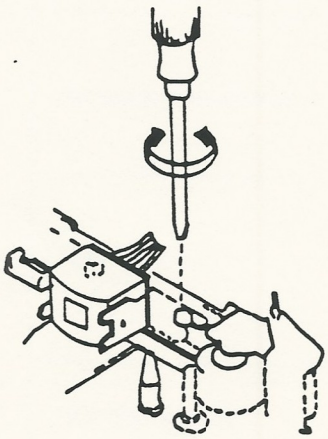

# MAINTENANCE

Whenever a unit is brought in for service or repair, it should be cleaned and lubricated and the head should be demagnetized.

## CLEANING

Clean the head and other parts contacting the tape using a soft cotton swab moistened with alcohol or head cleaning fluid.

Remove screws securing top cover and detach for head cleaning.

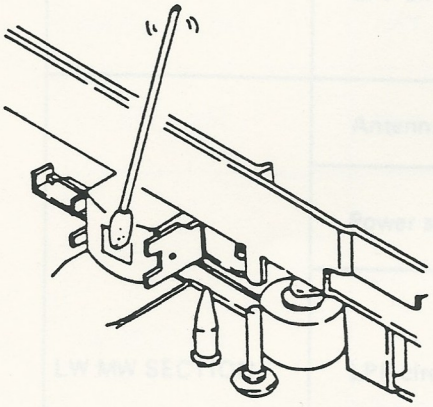

## DEMAGNETIZING

Do not use magnetized tools near the head, since they can magnetize head. With normal use, the head will retain small amounts of residual magnetism (this results in an increase of noise and loss of high-frequency response). Demagnetize the head with a standed demagnetizer.

**Procedure:**

1. Follow directions supplied with standard demagnetized.
2. If the capstan, tape guides or other metal parts become magnetized, a few passes of the demagnetizer along their lengths and a slow withdrawing technique should be adequate.

# TROUBLE SHOOTING

## RADIO SECTION

| SYMPTOM | DEFECTIVE CIRCUIT | | DEFECTIVE POINT AND CAUSE |
|---|---|---|---|
| NO SOUND | LW MW FM SECTION | Antenna circuit | • Antenna input circuit defective.<br>Poor antenna contact. |
| | | Power supply circuit | • Power supply circuit defective.<br>Check voltage changeover of Q523, Q517, Q512, Q518 |
| | | LPF circuit | • LPF circuit defective.<br>Check transistor Q501, Q502.<br>Capacitor C503, C504 short or open.<br>• OSC circuit defective.<br>• Microcomputor circuit defective.<br>Check IC 501 |
| | LW MW SECTION | Antenna input circuit | • Antenna input defective.<br>Poor antenna contact. |
| | | Power supply circuit | • Power supply circuit defective.<br>Check voltage changeover of Q517, Q516 Q515, Q518 |
| | | LPF circuit | • LPF circuit defective.<br>Check transistor Q501, Q502<br>Capacitor C503, C504 short of open.<br>• OSC circuit defective.<br>• Microcomputor circuit defective.<br>Check IC 501 |
| | | RF. OSC. IF output circuit | • L203, L204, L205, L206 open.<br>• Check for voltage of IC 201<br>• IF transformer T201 and T202 open.<br>• Resistor R222, R223 open.<br>• Switching transistor Q204 defective. |
| | MW SECTION | OSC circuit | • Switching transistor Q207, Q206 defective. |
| | LW SECTION | OSC circuit | • Switching transistor Q207, Q206 defective. |
| | FM SECTION | Antenna input circuit | • Antenna input circuit defective. |
| | | Power supply circuit | • Power supply circuit defective.<br>Check voltage changeover of Q512, Q513, Q514, Q518<br>• Resistor R537, R536, R137, R528, R529 open. |
| | | LPF circuit | • LPF circuit defective.<br>Check transistor Q501, Q502<br>Capacito C503, C504 short or open.<br>• OSC circuit defective.<br>• Microcomputor circuit defective.<br>Check IC 501 |
| | | RF OSC circuit | • FM tuner pack defective.<br>Check voltage of +B terminal<br>Check voltage of transistor Q101 |
| | | IF circuit | • Check pin voltage of IF IC101 and Q101<br>• T101 defective |

| SYMPTOM | DEFECTIVE CIRCUIT | | DEFECTIVE POINT AND CAUSE |
|---|---|---|---|
| NO SOUND | FM SECTION | | • MPX circuit defective.<br>Check pin voltage of MPX IC<br>Switching diode D104, D105 defective. |
| | LW MW FM SECTION | Antenna input circuit | • Poor antenna contact.<br>• Antenna input circuit defective. |
| | LW MW SECTION | RF, IF circuit | • Antenna input defective<br>• Deviation in tracking alignment.<br>• Deviation in IF transformer T201 and T202<br>• LW MW IC defective.<br>Check pin voltage of LW MW IC201 |
| | MW SECTION | ANT, RF circuit | • Deviation in tracking alignment.<br>• Capacitor C204 detective. |
| | LW SECTION | ANT, RF circuit | • Deviation in tracking.<br>• Capacitor C213, C218, C230 defective. |
| | FM SECTION | RF, IF or detector circuit | • FM tuner pack defective.<br>Deviation in tracking alignment.<br>Q101, Q102 defective<br>• IF circuit defective.<br>T101 misalignment.<br>Check pin voltage of IF IC.101 |
| | | MPX circuit | • MPX circuit defective.<br>Check pin voltage of MPX IC |
| DISTORTED SOUND | LW MW SECTION | RF. IF output circuit | • Diode D202, D203 defective. |
| | FM SECTION | IF circuit | • Deviation in IF transformer Q101. |
| OSCILLA-TION | LW MW SECTION | Power supply circuit | • Capacitor C221 defective. |
| | | IF detector circuit | • Capacitor C228, C226, defective |
| | FM SECTION | Power supply circuit | • Capacitor C116 defective |
| | | RF, IF circuit | • FM tuner pack defective<br>Capacitor C105 defective.<br>• IF circuit defective.<br>Capacitor C113 defective |
| POOR STEREO EFFECT | MPX circuit | | • Check pin voltage of IC102<br>• SVR102 ~ SVR103 misalignment.<br>• Stereo/mono switch Q104 defective.<br>• Capacitor C133 defective.<br>• Diode D103 open. |
| MUTING INOPERATIVE | Mute circuit | | • Mute circuit defective.<br>Check Q605, Q606, Q604, Q519. |

| SYMPTOM | DEFECTIVE CIRCUIT | | DEFECTIVE POINT AND CAUSE |
|---|---|---|---|
| | LW MW SECTION | Auto stop circuit | • MW LW auto stop circuit defective.<br>Check 16 pin of IC201<br>Check transistor Q504 and diode D208 |
| | FM SECTION | Auto stop circuit | • FM auto stop circuit defective<br>Check 14 pin of IC101<br>Check D102 and Q103<br>SVR101 misalignment. |
| ENGINE NOISE IS EXTREME | Motor compartment | | • Missing or poor connection of resistor wire on high tension coil of car.<br>Insert noise preventing resistor between ingition coil and distributor of car.<br>• Missing or poor connection of noise silencer by alternator of car.<br>Install specified noise silencer on the alternator.<br>• Missing or poor connection of grounding wire between engine chassis and engine, transmission and engine chassis of car. |
| | Antenna ground circuit | | • Missing or poor connection of grounding wire for antenna to grounding point of the car chassis. |
| LESS SENSITIVITY OR FREQUENCY DRIFT OCCURS WHEN AIR CONDITIONER IS ON | | | • If installed the set near blower of air conditioner, the temperature (hot or cold) create tuning or sensitivity drift. Avoid installing the set near air conditioner or if installing the set near air conditioner is unavoidable, isolate the set by isolating material from temperature of air conditioner |

## TAPE SECTION

| SYMPTOM | DEFECTIVE CIRCUIT | DEFECTIVE POINT AND CAUSE |
|---|---|---|
| NO SOUND | Power supply circuit | • Switch S1 defective. |
| | Mechanism or motor | Motor does not run.<br>Motor defective.<br>Mechanism defective.<br>Check for running of tape. |
| | Pre amplifier circuit | • Pre amplifier defective.<br>Check each pin voltage of pre amplifier IC301<br>• Capacitor C311 short.<br>• Head lead wire open |

| SYMPTOM | DEFECTIVE CIRCUIT | DEFECTIVE POINT AND CAUSE |
|---|---|---|
| DISTORTED SOUND OR INSUFFICIENT SOUND | Pre amplifier circuit | • Pre amplifier circuit defective.<br>Check each pin voltage of pre amplifier IC301 |
| | Head | • Head surface dirty.<br>• Head azimuth angle misalignment. |
| | Metal circuit | • Metal circuit defective<br>• Check transistor Q301, Q302 |
| MUTE IMOPERATIVE | Muting circuit | • Muting circuit defective<br>• Resistor R641 capacitor C623 defective.<br>• Check transistor Q605, Q606 and<br>• Diode D604 |
| OSCILLATION | Pre amplifier circuit | • C310 capacitor insufficient or open. |
| ASNORMAL TAPE SPEED | Mechanism or motor | • Mechanism defective<br>• Motor defective. |
| WOW AND FLUTTER | Flywheel drive section | • Flywheel, capstan of intermediate gear defective.<br>• Reel table defective.<br>• Belt, pinchroller, idler, flywheel or puiley defective.<br>• Motor defective |

## RADIO AND TAPE SECTION

| SYMPTOM | DEFECTIVE CIRCUIT | DEFECTIVE POINT AND CAUSE |
|---|---|---|
| NO SOUND | Power supply circuit | • Fuse open.<br>• Fauity connection between battery.<br>• Power switch defective.<br>• Choke transformer L402 or leac were cold soldered. |
| | Output circuit | • Speaker voice coil open.<br>• Faulty connection between speaker and connection core<br>• Power amplifier defective.<br>Check each pin voltage of power amplifier IC703 |
| | Control, Flat amplifier circuit | • Valiable resistor VR1, VR2, VR3, VR4, VR5, VR6, VR7, VR8,<br>• Voltage regulator defective.<br>Check voltage of IC703<br>• BASS, TREBLE circuit defective<br>5 Band EQ IC901 check voltage |
| DISORTED SOUND OR INSUFFICIENT SCOUND | Output circuit | • Speaker wire<br>• Power amplifier defective.<br>Check each pin voltage of power amplifier IC401 |
| DISTORTED SOUND OR INSUFFICIENT SOUND | | • Flat amplifier defective.<br>Check voltage of transistor<br>• BASS, TREBLE circuit defective (OSIO-800L)<br>• 5 Band EQ (OSIO-900L) |

| SYMPTOM | DEFECTIVE CIRCUIT | DEFECTIVE POINT AND CAUSE |
|---|---|---|
| OSCILLATION | Output circuit | • C423, C420, C421, C422 capacitor insufficient or open. |
| | Control, Flat amplifier circuit | • Voltage regulator defective. C736 capacity insufficient or open. |
| ENGINE NOISE IS EXTREME | Power supply circuit | • Missing or poor connection of grounding wire.<br>• L401, L402, choke coil insufficient. |
| | Control, flat amplifier circuit | • Voltage regulator defective. Check voltage of transistor R510, C506 capacity insufficient or open. |

## DISPLAY SECTION

| SYMPTOM | DEFECTIVE CIRCUIT | DEFECTIVE POINT AND CAUSE |
|---|---|---|
| NO DISPLAY (LCD) | Power supply circuit<br>Power supply circuit | • Power supply circuit defective. Check wiring Check voltage of |
| | Microcomputor circuit | • Microcompuor circuit defective. Check IC501 IC502 X'tal defective. LCD defective |
| | Matal display circuit | • Metal display circuit detective. Check IC501, IC502 X'tal defective. LCD defective. |
| NO DISPLAY (LED) | Metal display circuit | • Metal display circuit defective. Check IC501, IC502 |
| NO DISPLAY (LED) | Tape running display circuit | • Tape running circuit defective. LCD defective X-Tal defective |

# DESCRIPTIONS

## 1. BASIC OPERATION OF PULL FREQUENCY SYNTHESIZER

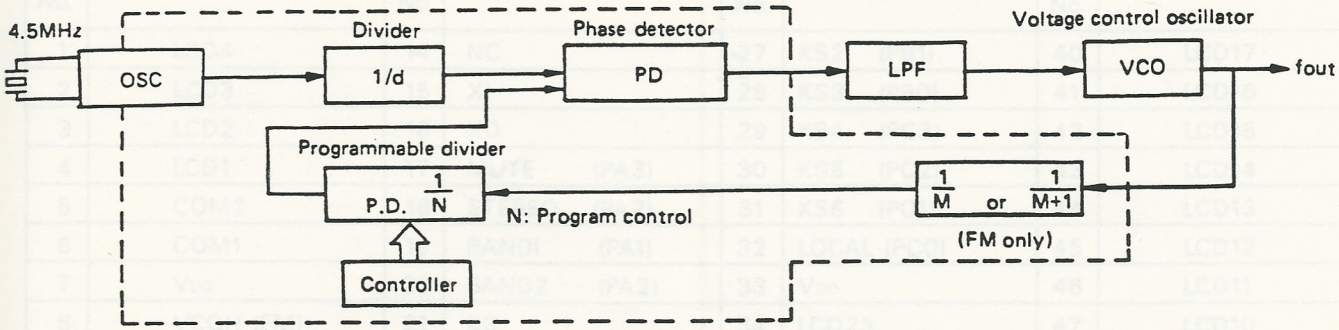


The illustration above is a block diagram which is a fundamental PLL frequency synthesizer.
In order to obtain reference frequency fr, the frequency of 4.5 MHz generated from a crystal oscillator (OSC) is passed into a divider circuit of I/d.
This fr is compared with fr', and runs through phase detector (PD) and low pass filter (LPF) to be inverted to direct-current signal, which is then applied as varicap voltage of voltage control oscillator (VCO), thereby controlling the oscillation frequency.
This oscillation frequency fout is divided down to I/N by programmable divider (PD), so that one closed loop is fixed in the relation of

fout = frxN

therefore, the operation of PLL is stabilized
In the case of automatic channel selection, the dividing ratio N is altered by the PD by a command from controller, and fout is changed accordingly.

### Programmable divider

Since the oscillation frequency of VCO is very high as compared with fr, it is divided down to I/N (in the case of AM) to decrease the difference from fr in this circuit.

### Phase detector

This is a circuit to detect the difference in frequency and phase between reference frequency fr and comparison frequency fr in terms of pulses.

### Low pass filter

This circuit is intended to vary and fix the output voltage in order to deliver a varicap voltage necessary for desired VCO frequency, on the basis of the output of the phase detector.

### Prescaler

The local oscillation frequency in FM is higher than the operating speed of the programmable divider of PLL, thereby opposing to accurate operation. To avoid this, the local oscillation frequency is preliminarily divided down in this circuit to a proper frequency permitting reliable operation of the programmable divider.
Pulse swallow count system is employed. A couple of programble divider (swallow counter and programmable counter) can be selected.

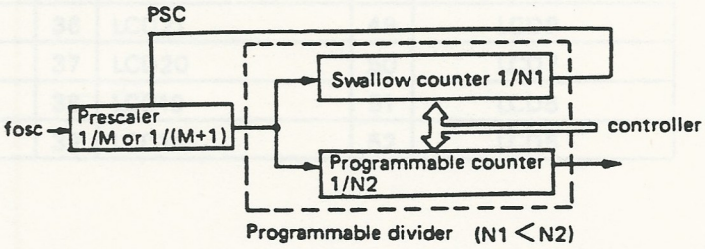


$$f_{osc} = (M+1)\,N1 + M\,(N2 - N1)\quad fr'$$
$$= (MN2 + N1)\,fr'$$

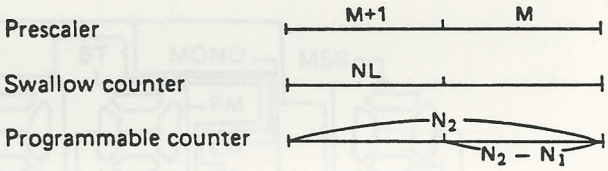


The prescaler at first starts the frequency division with the ration M+1. Then swallow counter and programmable counter start counting simulataneously. When N1 inputs are applied, swallow counter stops counting. Then the frequency division ratio of the prescaller is switched to M. Programmable counter continues to count however and stops when the input reaches N2. The frequency division ratio of the prescaller switches back to M+1 and swallow counter and programmable counter start to count again.
FM reception employs the pulse swallow count system. AM reception does not employ the pulse swallow count system but employs the direct frequency division system and so only programmable counter is operated.

## 2. GENERAL DESCRIPTION OF LOGIC IC (IC501)

a) IC (μPD1708AG-019)

This IC includes PLL and controller is a C MOS LSI for digital tuning of FM/MW/LW PLL frequency synthesizer system and controls such functions as FM/MW/LW auto matic channel selection, preset memory and frequency digital display with Prescaler and liquid crystal digital frequency display driver. It is packed in a 52 pin flat package.

| Pin No. | FUNCTIONAL | Pin No. | FUNCTIONAL | Pin No. | FUNCTIONAL | Pin No. | FUNCTIONAL |
|---|---|---|---|---|---|---|---|
| 1 | LCD4 | 14 | NC | 27 | KS2 (PB1) | 40 | LCD17 |
| 2 | LCD3 | 15 | XI | 28 | KS3 (PB0) | 41 | LCD16 |
| 3 | LCD2 | 16 | XO | 29 | KS4 (PC3) | 42 | LCD15 |
| 4 | LCD1 | 17 | MUTE (PA3) | 30 | KS5 (PC2) | 43 | LCD14 |
| 5 | COM2 | 18 | STEREO (PA2) | 31 | KS6 (PC1) | 44 | LCD13 |
| 6 | COM1 | 19 | BANDI (PA1) | 32 | LOCAL (PC0) | 45 | LCD12 |
| 7 | $V_{DD}$ | 20 | BAND2 (PA2) | 33 | $V_{DD}$ | 46 | LCD11 |
| 8 | VCOH (FM) | 21 | K3 | 34 | LCD23 | 47 | LCD10 |
| 9 | VCOL (AM) | 22 | K2 | 35 | LCD22 | 48 | LCD9 |
| 10 | GND | 23 | K1 | 36 | LCD21 | 49 | LCD8 |
| 11 | E01 | 24 | K0 | 37 | LCD20 | 50 | LCD7 |
| 12 | E02 | 25 | KS0 (PB3) | 38 | LCD19 | 51 | LCD6 |
| 13 | CE | 26 | KS1 (PB2) | 39 | LCD18 | 52 | LCD5 |

SEGMENT

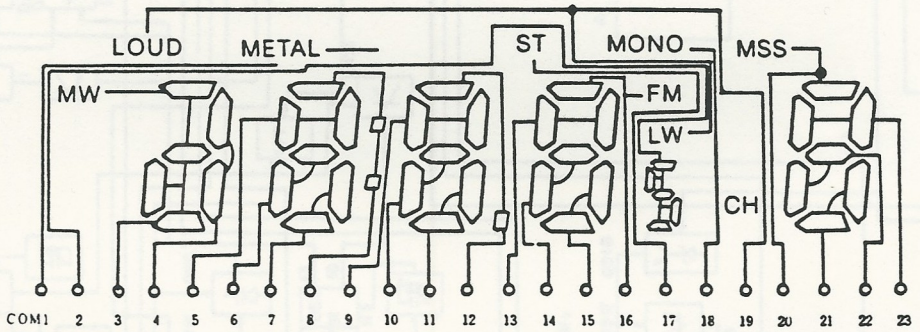


PIN CONNECTIONS

COMMON

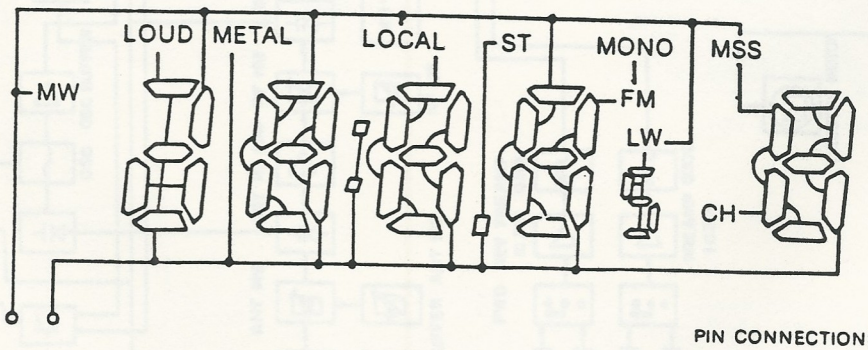


PIN CONNECTIONS

# BLOCK DIAGRAM

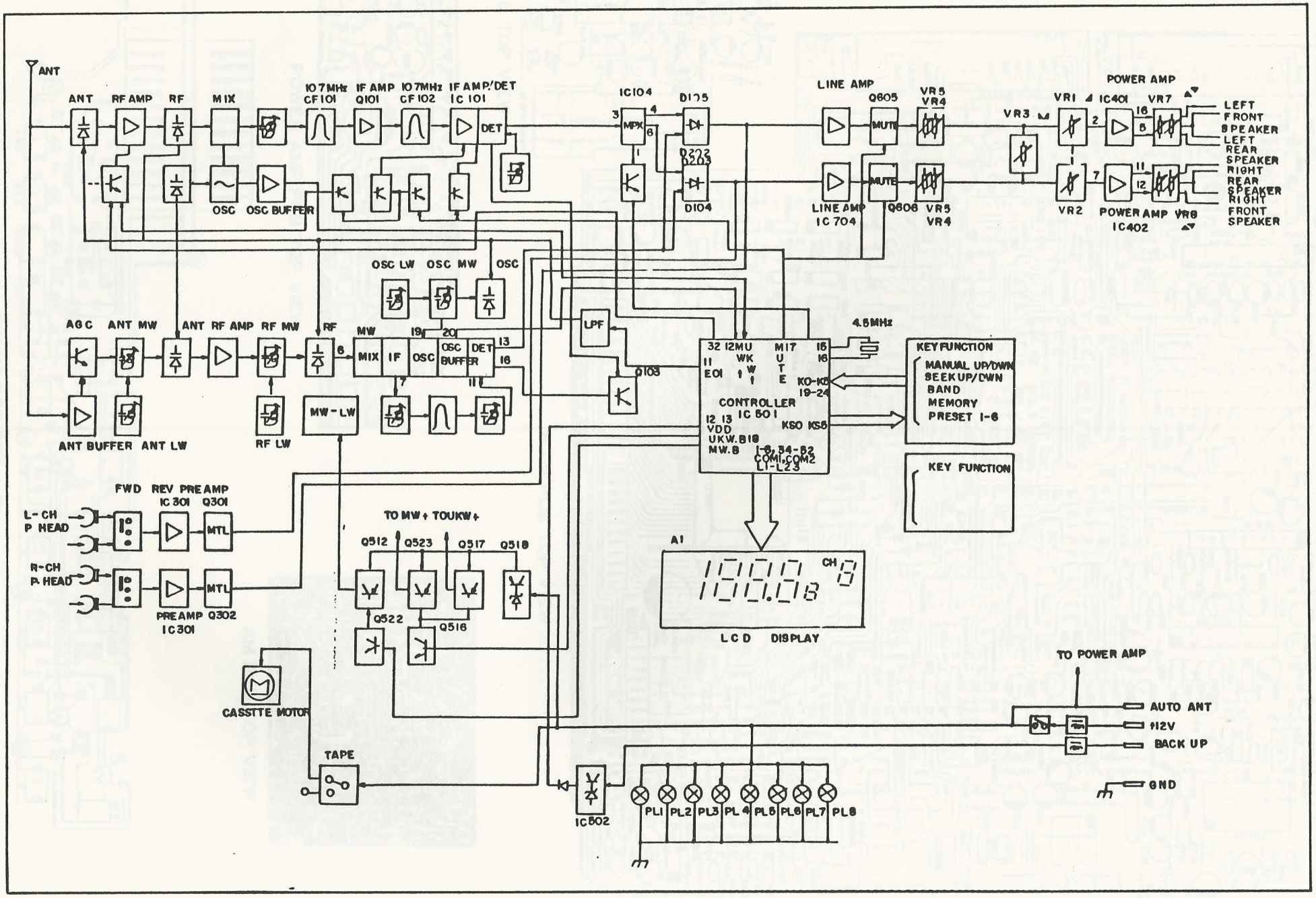

# O-7503 TOP VIEW

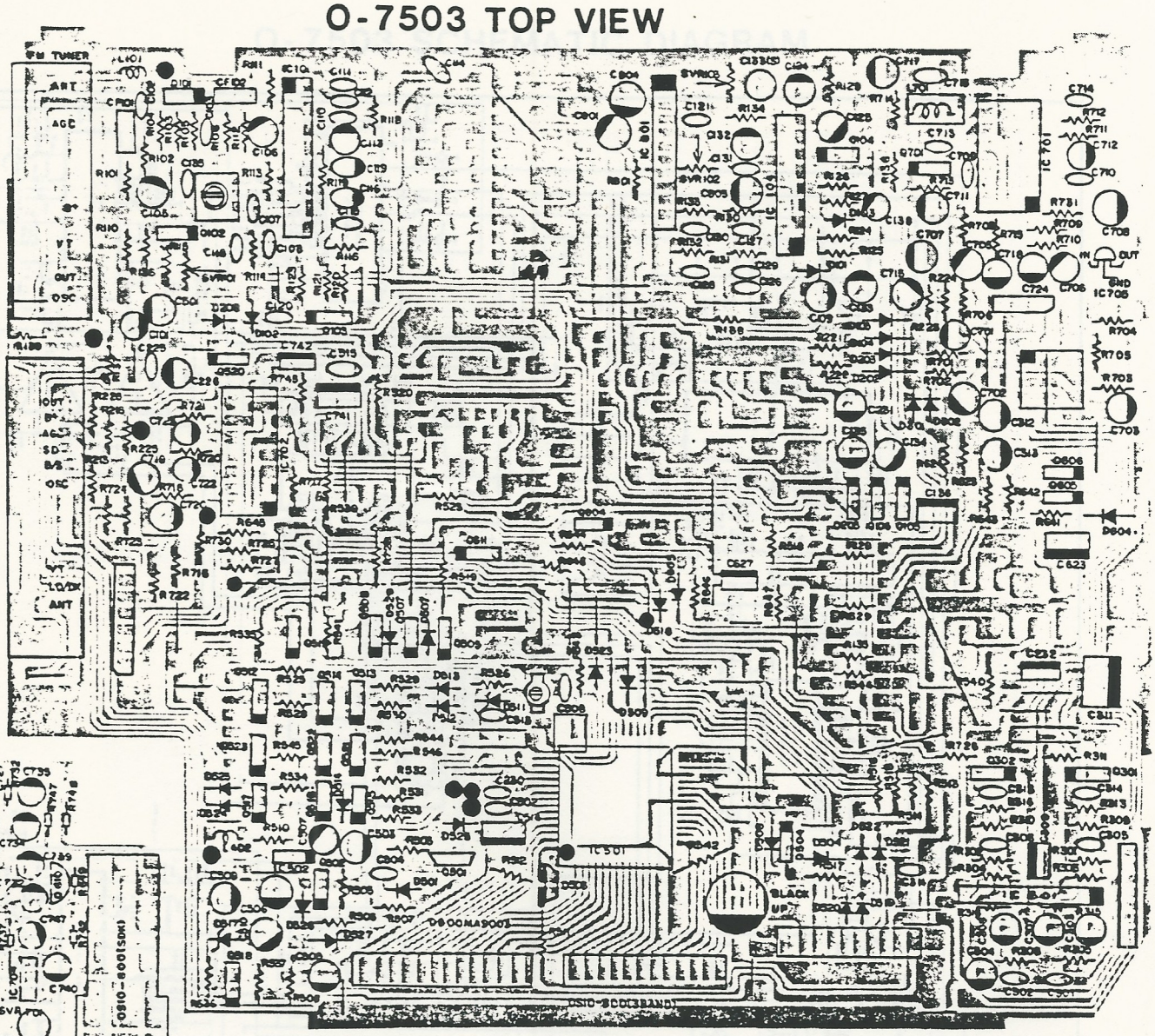

MAIN PCB TOP VIEW

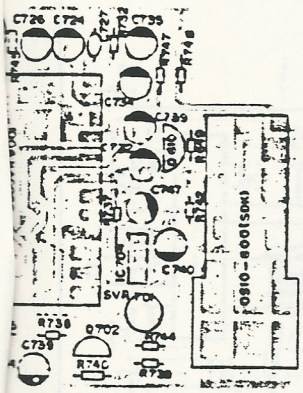

R PCB TOP VIEW

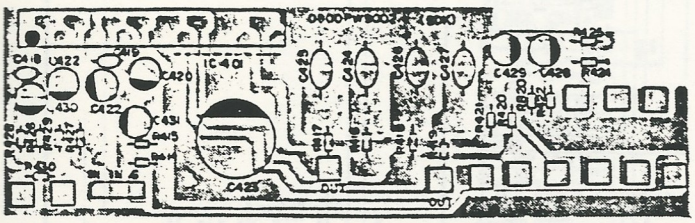

POWER AMP PCB TOP VIEW

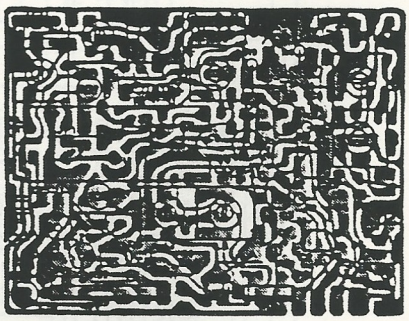

AM PCB TOP VIEW

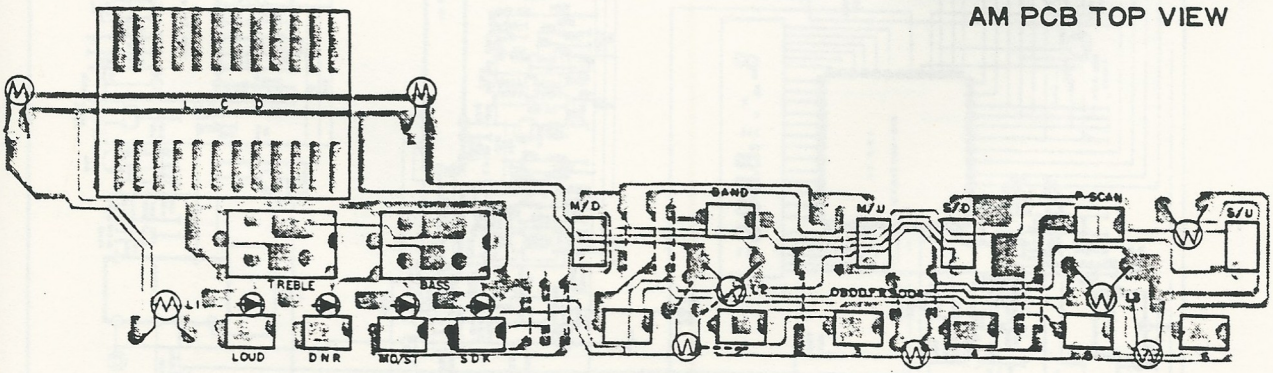


FRONT PCB TOP VIEW

# O-7503 SCHEMATIC DIAGRAM

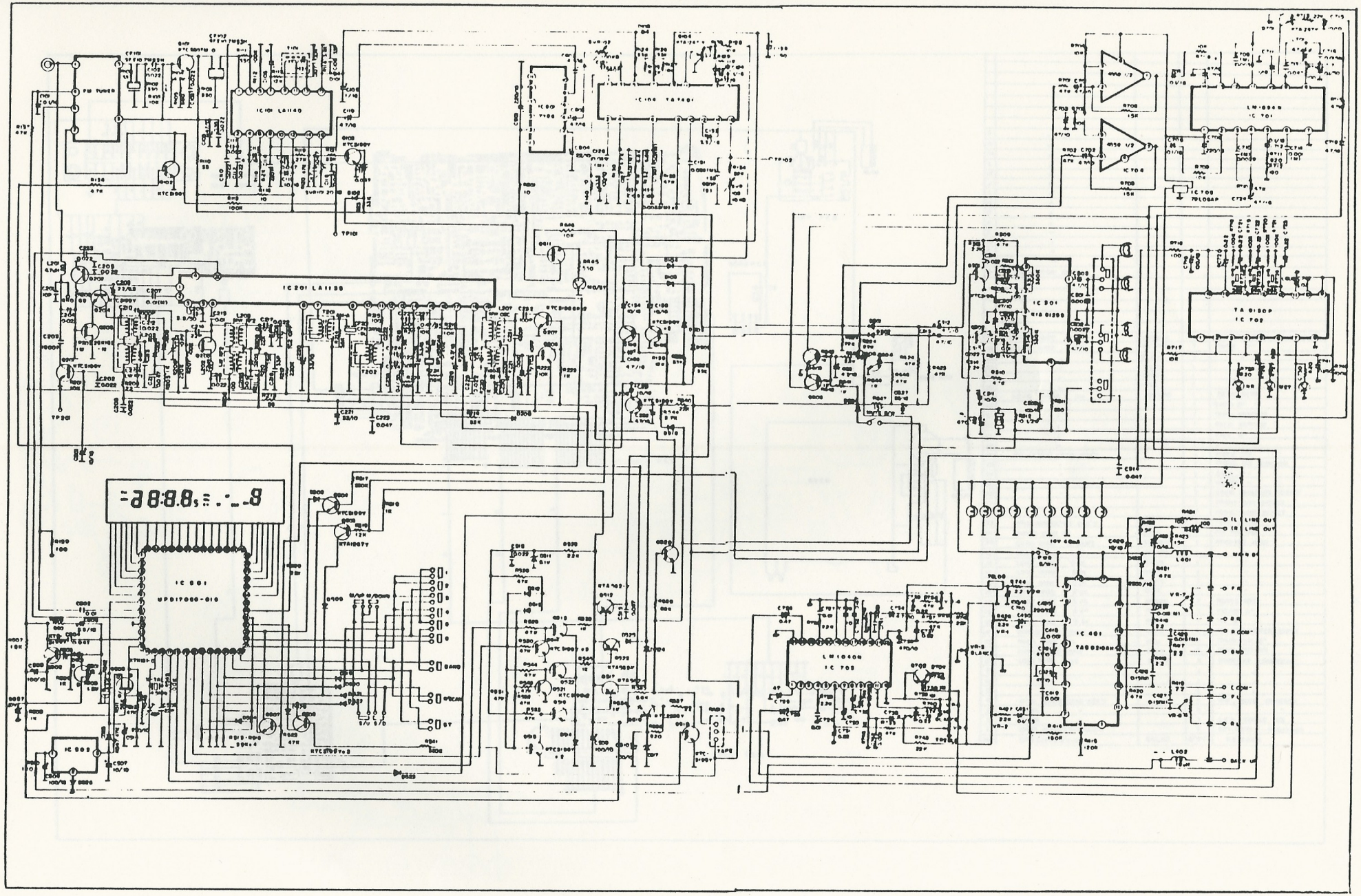

# O-7503 WIRING DIAGRAM

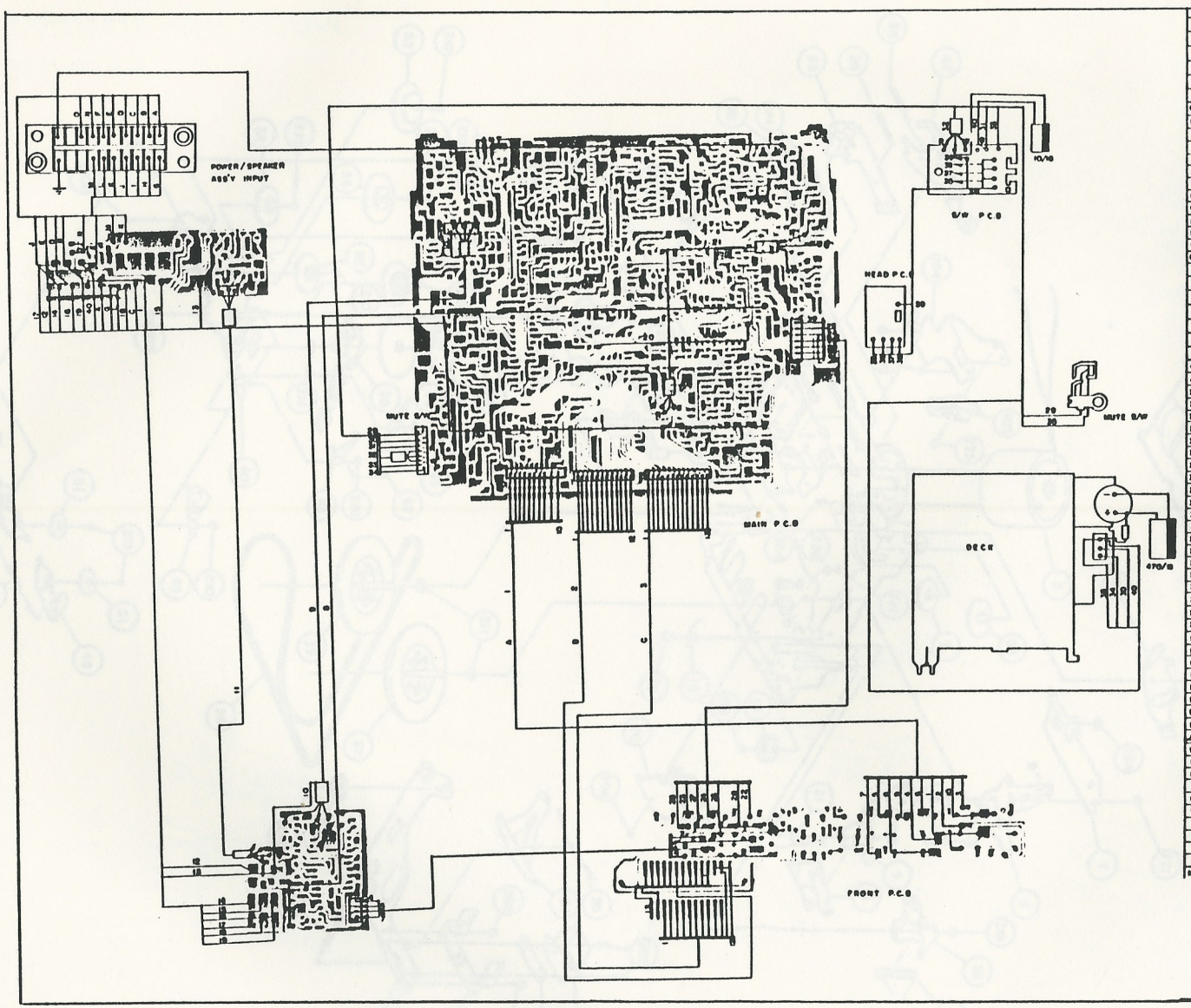


| NO | SPECIFICATION | COLOR | Q'TY | REMARK |
|---|---|---|---|---|
| A | CONNECTOR ASS'Y | | | |
| 41 | LEAD WIRE #20 | ORANGE | 1 | MEMORY B+ |
| 40 | LEAD WIRE #20 | ORANGE | 1 | TAPE B+ |
| 39 | " | BLACK | 1 | " |
| 38 | " | BLUE | 1 | " |
| 37 | " | GREEN | 1 | " |
| 36 | " | RED | 1 | " |
| 35 | LEAD WIRE 20 | YELLOW | 1 | DECK HEAD |
| 34 | " | | 1 | RADIO B+ |
| 33 | " | | 1 | TAPE INDICATE |
| 32 | " | | 1 | DECK OUTPUT |
| 31 | " | | 1 | TAPE B+ |
| 30 | " | | 1 | B+ |
| 29 | BP SHIELD LEAD ASS'Y | | 1 | MUTE SW |
| 28 | " | | 1 | METAL SW INDICATE |
| 27 | " | | 1 | DOLBY " |
| 26 | " | | 1 | NO/NT " |
| 25 | " | | 1 | LOUD INDICATE EFFECT |
| 24 | " | | 1 | FRONT-DNR EFFECT |
| 23 | " | | 1 | FRONT-LOUD EFFECT |
| 22 | TPIN CONNECTOR ASS'Y | | 1 | TAPE METAL |
| 21 | SHIELD WIRE #P | GRAY | 1 | AM. FM. DIC |
| 20 | LEAD WIRE # ASS'Y | YELLOW | 1 | MAIN PCB. JUMP |
| 19 | LEAD WIRE # 24 | YELLOW | 1 | " |
| 18 | LEAD WIRE # 24 | GREEN | 1 | " |
| 17 | LEAD WIRE # 24 | GRAY | 1 | " |
| 16 | LEAD WIRE # 24 | WHITE | 1 | " |
| 15 | LEAD WIRE # 24 | BLUE | 1 | " |
| 14 | LEAD WIRE # 24 | BROWN | 1 | POWER ASS'Y |
| 13 | LEAD WIRE # 24 | RED | 1 | VR/SW B+ |
| 12 | LEAD WIRE # 24 | RED | 1 | VR B+ |
| 11 | SHIELD WIRE #P18 | GRAY | 1 | VR OUT POWER INPUT |
| 10 | HEAD WIRE #9 | RED | 1 | MAIN-VR B+ |
| 9 | SHIELD WIRE #P18 | GRAY | 1 | MAIN OUTPUT |
| 8 | LEAD WIRE 20 | BROWN | 1 | MAIN-VR LOUDNESS |
| 7 | " | | 1 | " |
| 6 | " | | 1 | " |
| 5 | " | | 1 | " |
| 4 | 4PIN CONNECTOR ASS'Y | | 1 | TRE - BASS. INDICATE |
| 3 | 18PIN " | | 1 | " |
| 2 | 12PIN " | | 1 | LCD - FRONT PCB |
| 1 | 10PIN CONNECTOR ASS'Y | | 1 | KEY MATRIX - FRONT PCB |

# MECHANISM EXPLODED VIEW

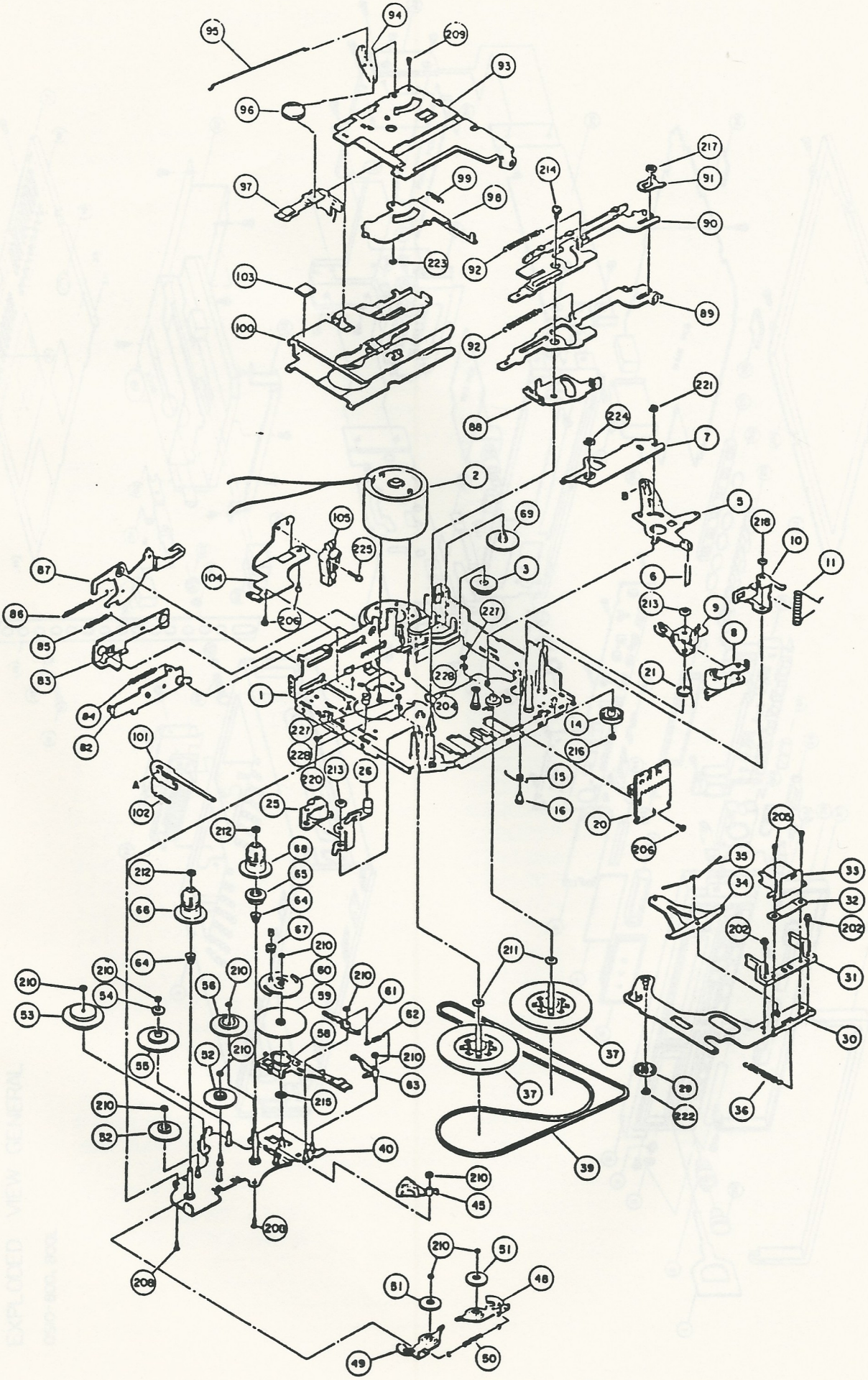

# O-7503 EXPLODED VIEW

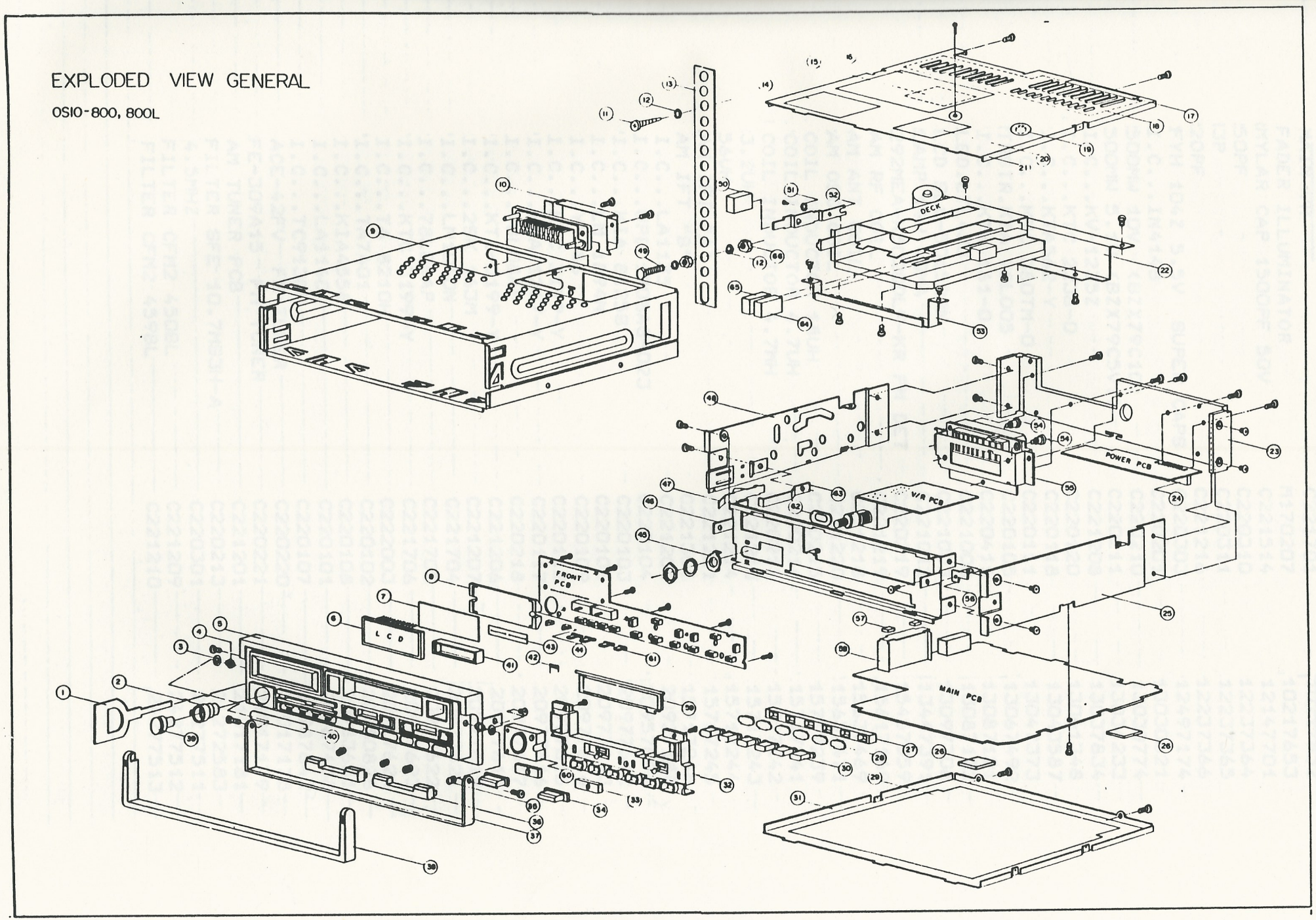

| DESCRIPTION | | PART NUMBER |
|---|---|---|
| MAIN VR | C221701 | 10217652 |
| FADER ILLUMINATOR | M170207 | 10217653 |
| MYLAR CAP 1500PF 50V | C221514 | 12147701 |
| 50PF | C220310 | 12237364 |
| 3P | C220311 | 12237365 |
| 20PF | C221216 | 12237366 |
| FYH 104Z 5.5V SUPER CAPS | C220303 | 12497174 |
| I.C...IN4148 | C220201 | 13030621 |
| 500MW 10V (BZX79C10) | C220210 | 13030774 |
| 500MW 5.1V (BZX79C5V1) | C220211 | 13034233 |
| I.C...KV-1235Z | C221208 | 13037834 |
| I.C...KTC 2236-O | C220120 | 13041348 |
| I.C...KTA562-Y | C220118 | 13043587 |
| I.C...KTC 380TM-O | C220111 | 13047373 |
| TRSTR.KIA 78L005 | C220105 | 13067492 |
| I.C...KTK 161-O | C220411 | 13087121 |
| LED.LTL433 | C221008 | 13087122 |
| LCD SLC-50152RN | C221003 | 13097308 |
| LAMP 14V 40MA | C221012 | 13447391 |
| 292MEA-K5020DLF-KR FM DET | C220219 | 15457059 |
| AM RF COIL | C221219 | 15617169 |
| AM ANT. COIL | C221218 | 15637469 |
| AM OSC COIL | C221220 | 15637471 |
| COIL INDUCTOR 18UH | C220215 | 15717239 |
| COIL INDUCTOR 4.7UH | C220216 | 15717241 |
| COIL INDUCTOR 4.7MH | C220217 | 15717242 |
| 3.2UH | C221213 | 15717243 |
| 56UH | C221214 | 15717244 |
| AM IFT "A" | C221221 | 15717245 |
| AM IFT "B" | C221301 | 15717246 |
| I.C...LA1135 | C221204 | 20927154 |
| I.C...UPD 1708AG-023 | C220104 | 20957096 |
| I.C...KIA 8125S | C220103 | 20977612 |
| I.C...LM 1894N | C220106 | 20977613 |
| I.C...YY 86 | C220109 | 20977614 |
| I.C...KTC 3199-Y | C220112 | 20977615 |
| I.C...KTA 1267-Y | C220117 | 20977616 |
| I.C...78L08AP | C220218 | 20977617 |
| I.C...KTC-3199-Y | C221206 | 20977618 |
| I.C...2SK 163M | C221207 | 20977619 |
| I.C...LM1040N | C221704 | 20977621 |
| I.C...78L08AP | C221705 | 20977622 |
| I.C...KTC 3199-Y | C221706 | 20977623 |
| I.C...TA 8210H | C222003 | 20977624 |
| I.C...TA7401 | C220102 | 20980826 |
| I.C...KIA4558 | C220108 | 20983631 |
| I.C...LA1140 | C220101 | 20987458 |
| I.C...TC9130P | C220107 | 20987842 |
| ACE-42FV FM TUNER | C220220 | 21017178 |
| FE-309A15 FM TUNER | C220221 | 21017179 |
| AM TUNER PCB | C221201 | 21017181 |
| FILTER SFE 10.7MS3H-A | C220213 | 24272583 |
| 4.5MHZ | C220301 | 24277511 |
| FILTER CFM2 450BL | C221209 | 24277512 |
| FILTER CFM2 459BL | C221210 | 24277513 |