RADIO SERVICE BULLETIN

Issue: No 146
Date of Issue: September, 1959
Subject: Model A5182/1 EM

SPECIFICATION OF S.T.C. MODEL A5812/1 TABLE RADIO

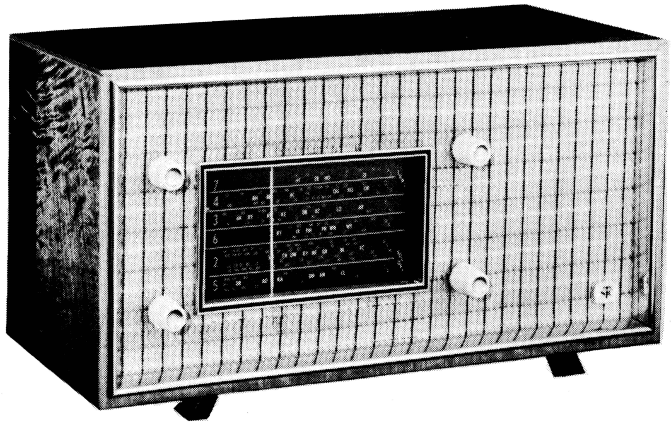

DESCRIPTION:

Inbuilt high gain aerial.
Aerial and earth leads provided.
Inverse feedback used to minimise distortion.
Heavy duty elliptical speaker.
Large size power transformer.
Large clear slide rule dial, fully calibrated with all Australian stations in state lanes.
Knob control functions marked on dial scale.
Radio gramophone change over switch and pick-up terminals for connection of external record player.
Mains on-off switch coupled with tone control.
Modern styled polished timber veneer cabinet with plastic grille, available in Walnut or Natural Maple finish.

Improved I.F. Selectivity.

TUNING RANGE:

530–1620 Kc/s.

INTERMEDIATE FREQUENCY:

455 Kc/s.

MODEL 5182/1

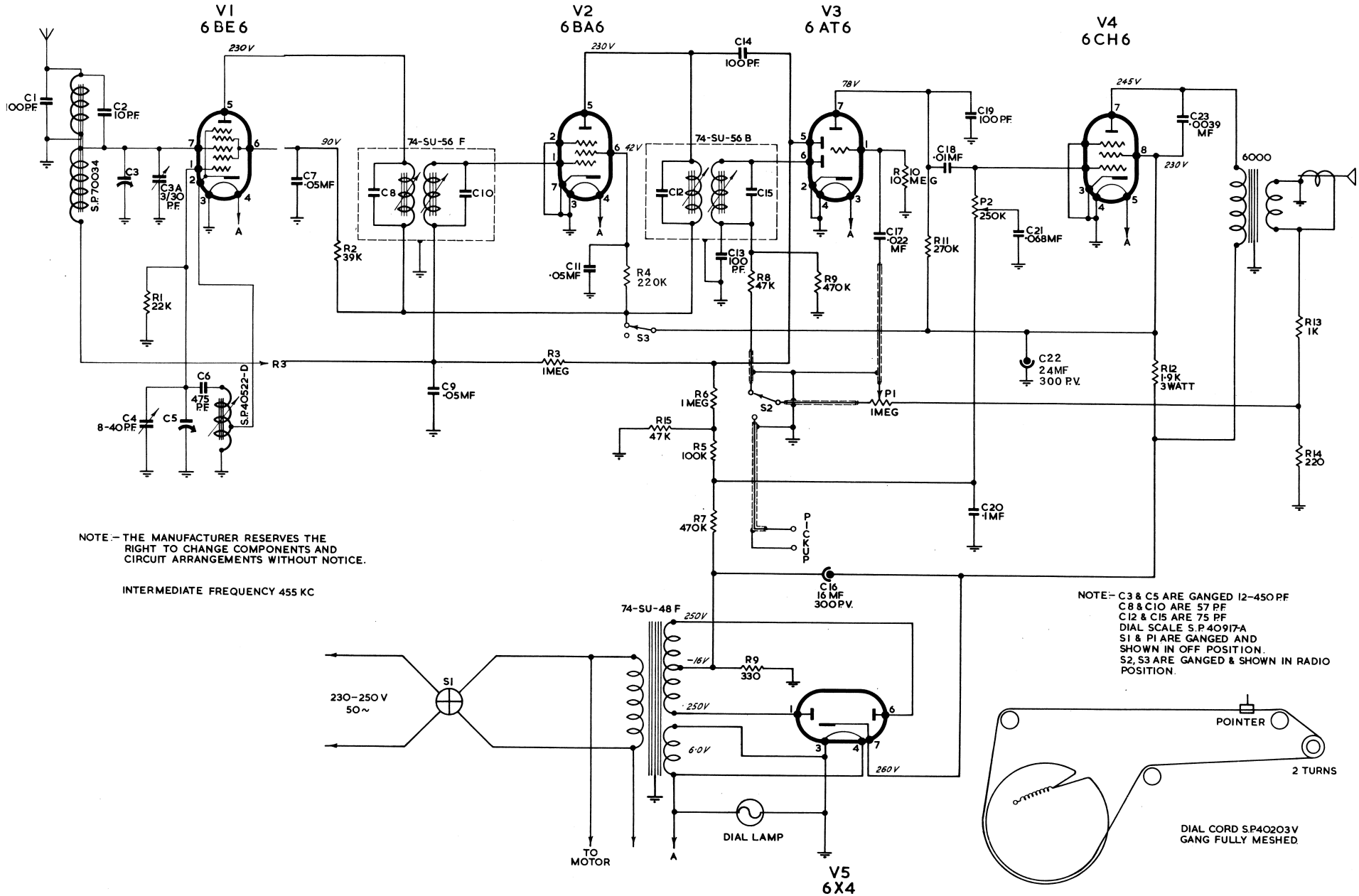

NOTE:- THE MANUFACTURER RESERVES THE RIGHT TO CHANGE COMPONENTS AND CIRCUIT ARRANGEMENTS WITHOUT NOTICE.

INTERMEDIATE FREQUENCY 455 KC

NOTE:- C3 & C5 ARE GANGED 12-450 P.F.
C8 & C10 ARE 57 P.F.
C12 & C15 ARE 75 P.F.
DIAL SCALE S.P.40917-A
S1 & P1 ARE GANGED AND SHOWN IN OFF POSITION.
S2, S3 ARE GANGED & SHOWN IN RADIO POSITION.

Incidentally, the effect of direct sunlight on a highly polished cabinet will cause the colour to fade.

DIMENSIONS:

	RECEIVER	CARTON
Length	18''	20''
Height	9 3/8''	10''
Depth	7''	10''
Weight	14lbs.	17lbs.

PART NUMBER	PART NAME
SP40917A	Dial Scale
SP40794	Tuning Knob, located at upper right hand side of dial
SP40852	Circlip for knob
SP40534P	Mains switch and volume control, located at lower left hand side of dial.
SP40783B	Tone control, located at lower left hand side of dial.
RS.517.96	5'' x 7'' Speaker
RS.507.28	Speaker Transformer
–	6.3 volt .3 amps MES Dial Lamps
SR111	Grille Material "Sarlon"
74–SU–48F	Power Transformer
74–SU–56F	1st I.F. Transformer
74–SU–56C	2nd I.F. Transformer
SP70034A	Ferrite Rod Aerial
SP30669D	Switch Assy. "Radio-gram" located at upper left hand side of dial
MSP 18621	2 Gang Tuning Condenser
SP40914DD	Cabinet "Plaza"
SP40522D	Oscillator Coil
SP30534A	Locknut
Goldring 3 1/8'' Dia.	Dial Drum
SP40835	Dial Pointer
Efco No. 3	Dial Light Holder
679–2–5	Pick up Plate Assy.
SP40815	Dial Plate
SP40819B	Dial Backing
SP30104C	Dial Clamp
SP40246B	Pulley Stud
SP40245A	Pulley
SP40834A	Spindle
SP21134B	Circlip
A3	Grommett
SP40209	Valve Shield
H184	Dial Cord (4 ft.)

VALVE COMPLEMENT:

V1 Frequency converter 6BE6
V2 I.F. amplifier 6BA6
V3 Detector, A.G.C. and audio amplifier 6AT6 (6AV6)
V4 Power output pentode 6CH6
V5 H.T. rectifier 6X4

POWER SUPPLY:

230–250 Volts at 50 cycles A.C. only.
180 milliamps at 240 volts input.

LOUDSPEAKER:

5 inch by 7 inch elliptical permanent magnet type with 6000 ohms transformer, mounted on the chassis.

CIRCUIT VOLTAGES:

Refer to circuit diagram.
These voltages may vary within 10% of their stated values.

Measuring meter must be at least 20,000 ohms per volt.

MEASUREMENT SPECIFICATION:

I.F. Sensitivity – V1 grid – 30 microvolts
I.F. Sensitivity – V2 grid – 2 millivolts
Broadcast Sensitivity – 5 microvolts average.

NOTE: It may be difficult to measure the overall sensitivity if the signal generator has any leakage.

The above input signals are required to produce 17 volts between the plate of V4 and pin 7 of V5, through a series capacitor of 1 mfd.

No wiring should be disconnected when checking sensitivity, and a 1 mfd capacitor should be used in series with the "HOT" signal generator lead and the grid of V1 or V2.

Incorporated in this model is a ferrite rod aerial which gives high gain and good selectivity, and allows the receiver to be moved from room to room in most locations without the necessity of an aerial connection.

In areas of weak reception or where the inbuilt ferrite rod aerial does not provide a sufficiently strong signal, leads (which are suitably marked) are provided for connection to an external aerial and earth.

The external aerial is coupled through a high impedance winding to the ferrite rod and the average size external aerial will not cause any mistuning.

The tone control is a continuously variable type to allow a greater choice of tone variation.

To maintain the high lustre of the polished cabinet, it is advisable to use "Wattyl" Burnisher. Apply sparingly on a soft (cotton) cloth, but rub vigorously and then polish with a soft (cotton) clean cloth.

VENTILATION:

Due to the fact that most thermionic devices such as radio valves, etc., develop heat, which must be conducted away, our cabinets are designed to provide appropriate ventilation.

However, with a widely varying ambient temperature, it is most important that the ventilation is not restricted by placing the receiver too close to a wall or near a window through which direct sunlight enters.