SANYO

MODEL
9U-290

All-transistor Radio

Service Manual

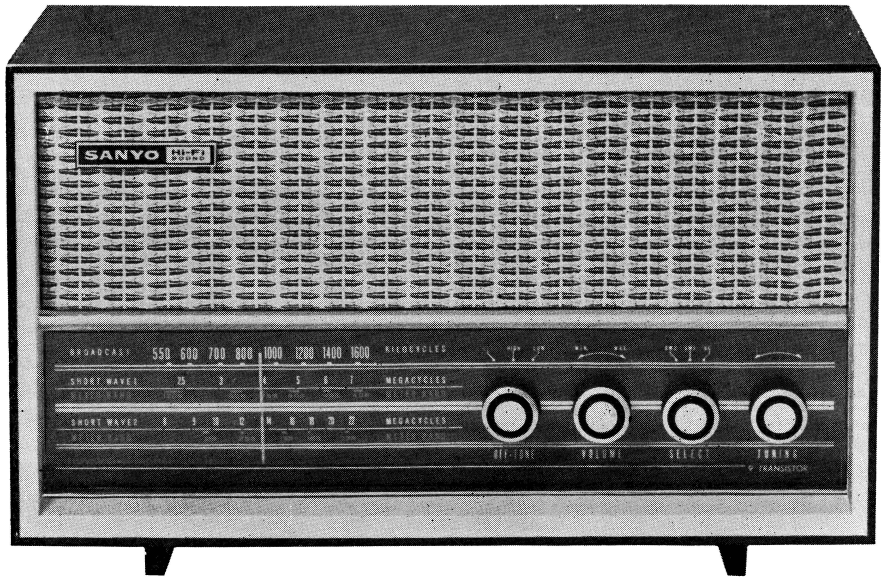

SPECIFICATIONS

FREQUENCY RANGE

BC	530–1,605 Kc
SW 1	2.3–7.3 Mc
SW 2	8.0–22 Mc

INTERMEDIATE FREQUENCY
455 Kc

TRANSISTORS

(1)	2SA223	Local oscillator
(2)	2SA222	Mixer
(3)	2SA322	1st IF amplifier
(4)	2SA203	2nd IF amplifier
(5)	2SB185	Audio pre-amplifier
(6)	2SB185	Audio amplifier
(7)	2SB185	Driver
(8)	2SB272×2	Power amplifier

DIODE & THERMISTOR

(1)	1S188	Diode : Detector & AGC
(2)	SDT–06	Thermistor : Temperature compensator

OUTPUT POWER

Undistorted	0.8 W
Maximum	1.3 W

SENSITIVITY

BC	35 μV/m	for 50 mW output
SW1	30 μV/m	for 50 mW output
SW2	3.5 μV	for 50 mW output

CURRENT DRAIN

No signal	20 mA
Maximum	215 mA

POWER SUPPLY
DC 9 volt : 6 D–size flashlight batteries

LOUDSPEAKER
6″ permanent dynamic speaker 4 ohms

DIMENSIONS
18″ wide × 11″ high × 8″ deep

WEIGHT
11 lbs. Excl. batteries

SANYO ELECTRIC CO., LTD.

SANYO ELECTRIC CO., LTD.

OSAKA, JAPAN.

INTERNATIONAL DIVISION : SANYO ELECTRIC TRADING CO., LTD.

Printed in Japan

MAIN PARTS CONNECTION

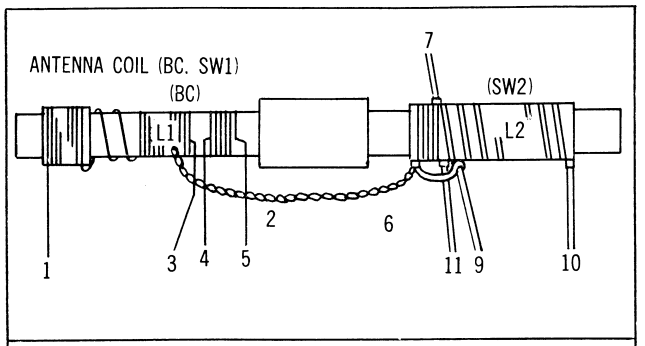

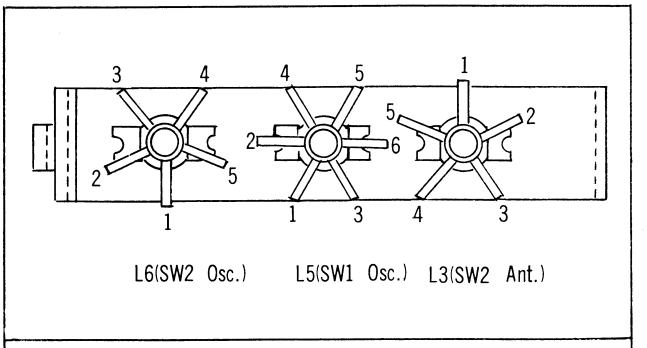

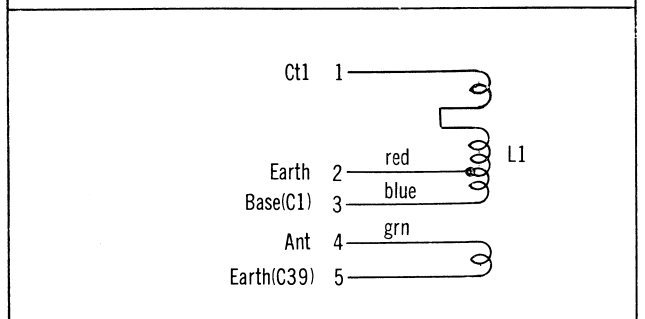

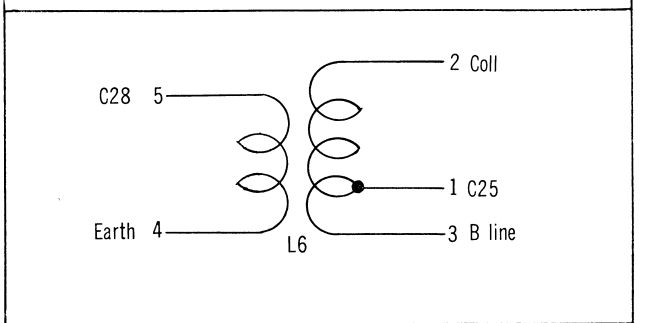

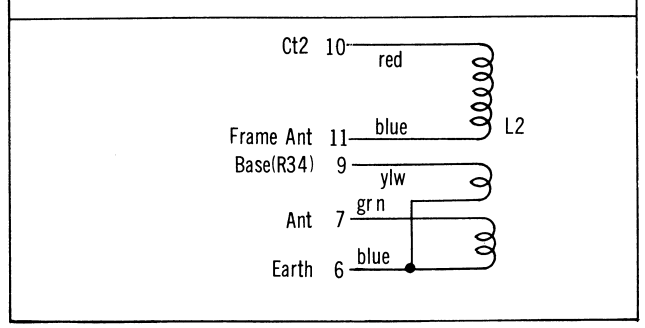

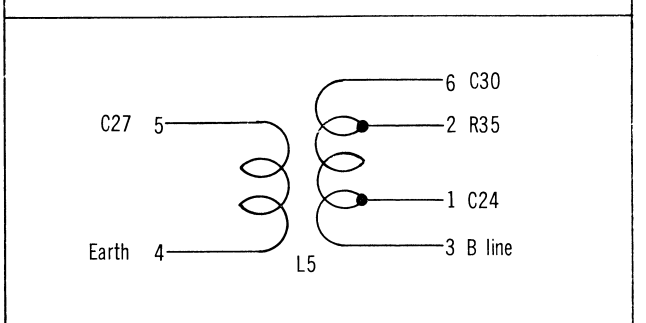

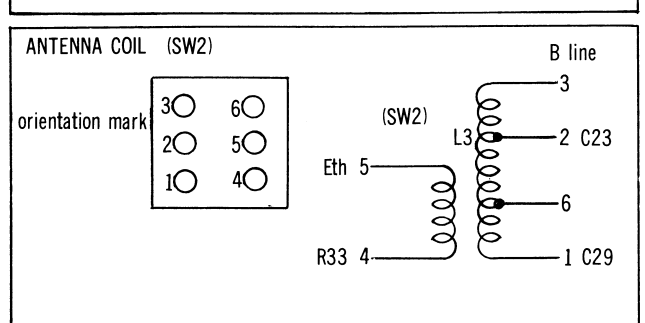

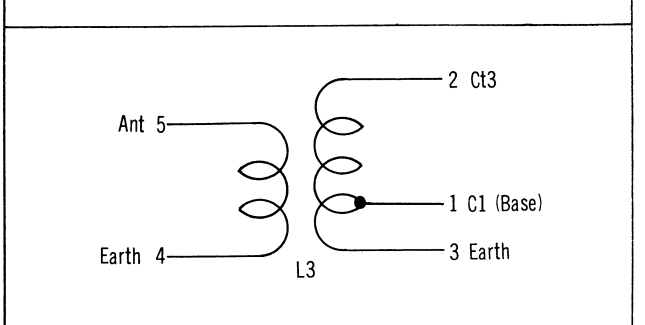

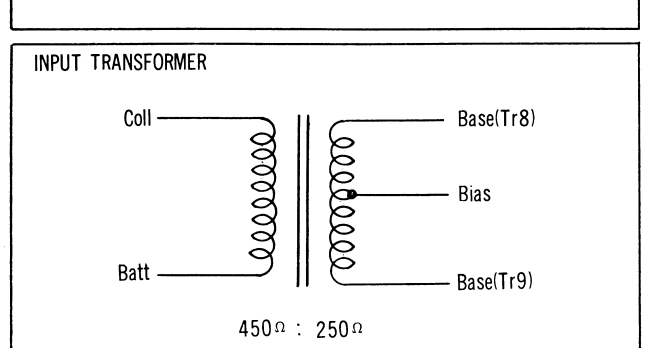

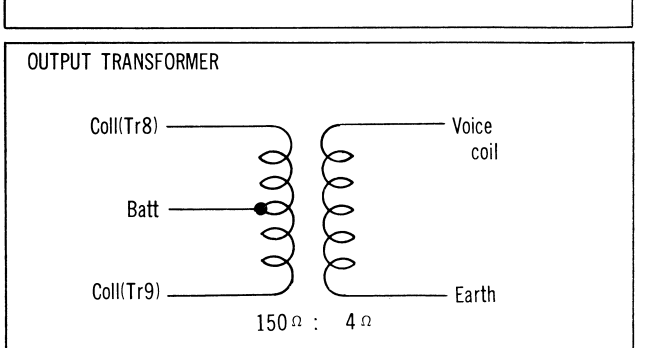

INTER-PARTS CONNECTION

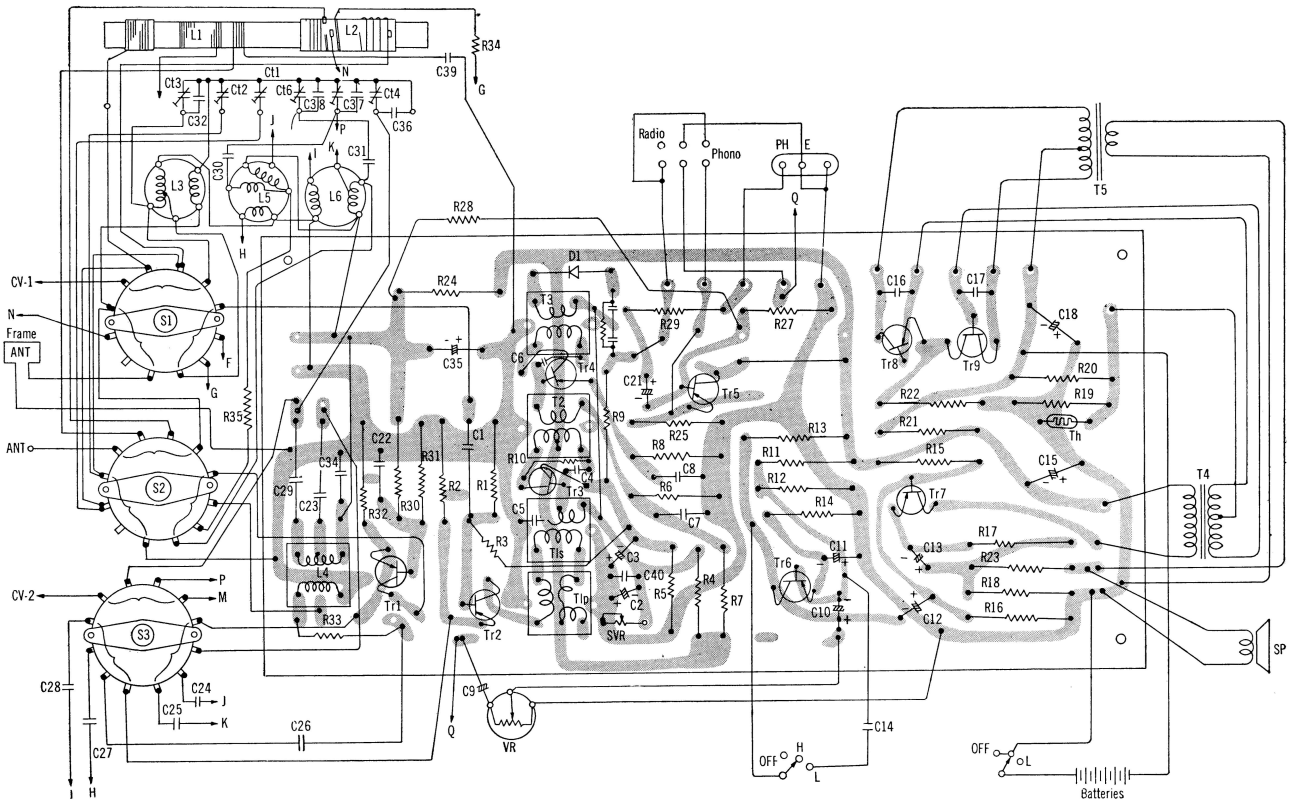

CONSTRUCTIONS

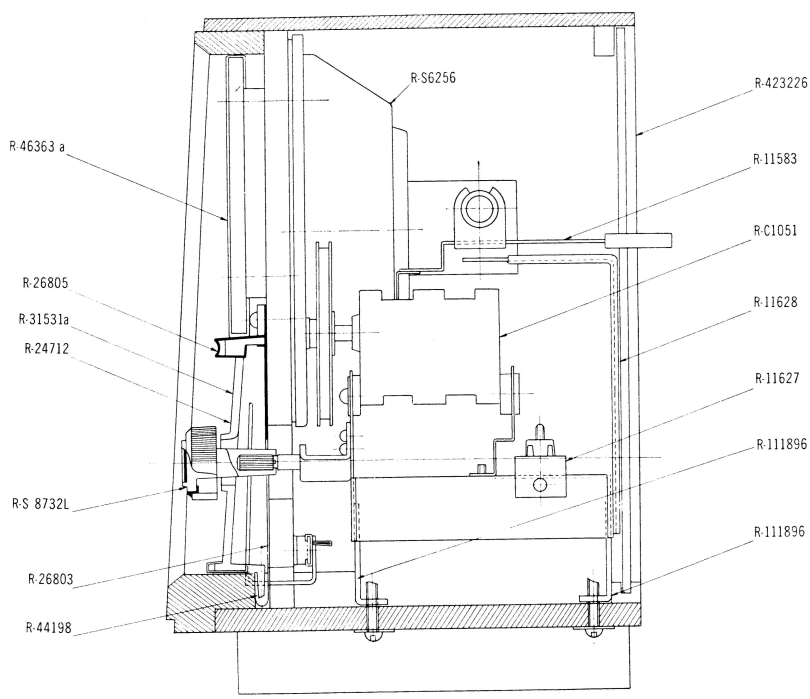

ALIGNMENT PROCEDURES

Apply volt-meter across the voice coil. Volume control should be at maximum position. Output of signal generator should be not higher than necessary to obtain output reading in order to avoid AGC function. (Tone control in HIGH position)

STEP	SIGNAL GENERATOR COUPLING	SIGNAL GENERATOR FREQUENCY	RADIO DIAL SETTING	ADJUST FOR MAXIMUM OUTPUT
IF ALIGNMENT (Band select in BC position)				
1	Radiate signal through the loop antenna, which connected with signal generator output cable.	455 Kc	530 Kc	IF Trans. T3 IF Trans. T2 IF Trans. T1
BROADCAST RF ALIGNMENT (Band select in BC position)				
2	Radiate signal through the loop antenna, which connected with signal generator output cable.	515 Kc	left end	BC osc coil L4
3		1,650 Kc	right end	BC osc trim. Ct4
4		Repeat steps 2 and 3.		
5		600 Kc	600 Kc	BC Ant. coil L1
6		1,400 Kc	1,400 Kc	BC Ant. trim. Ct1
7		Repeat steps 5 and 6.		
SHORTWAVE 1 RF ALIGNMENT (Band select in SW1 position)				
8	Radiate signal throngh the loop antenna, which connected with signal generator output cable.	2.23 Mc	left end	SW1 osc coil L5
9		7.5 Mc	right end	SW1 osc trim. Ct5
10		Repeat steps 8 and 9.		
11		2.5 Mc	2.5 Mc	SW1 Ant. coil L2
12		6.5 Mc	6.5 Mc	SW1 Ant. trim. Ct2
13		Repeat steps 11 and 12.		
SHORTWAVE 2 RF ALIGNMENT (Band select in SW2 position)				
14	Inject signal through the dummy antenna, which connected with signal generator output cable.	7.7 Mc	left end	SW2 osc coil L6
15		22.8 Mc	right end	SW2 osc trim Ct6
16		Repeat steps 14 and 15.		
17		8.5 Mc	8.5 Mc	SW2 Ant. coil L3
18		22.8 Mc	22.8 Mc	SW2 Ant. trim. Ct3
19		Repeat steps 17 and 18.		

ADJUSTMENT OF Tr3 BIAS VOLTAGE

Connect a mili-ammeter between collector of Tr3 and primary of T2. Adjust a value of SVR (variable resistor) so as to obtain 400 μA meter reading. After that, short-circuit the break between Tr3's collector and T2.

CIRCUIT DIAGRAM

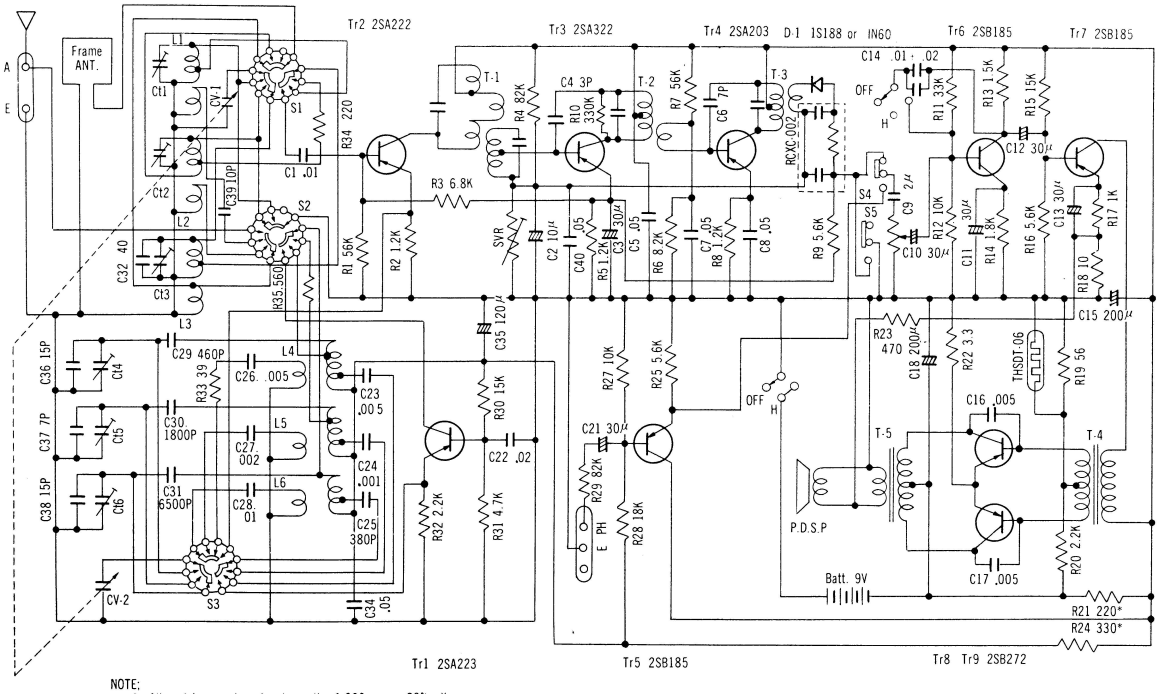

NOTE;
§ All resistance values in ohms. K = 1,000 * = 20% allowance
§ All capacitance values less than 1.0 in "μF" and 1.0 & above in "μμF" except those indicated.

PARTS LAYOUT

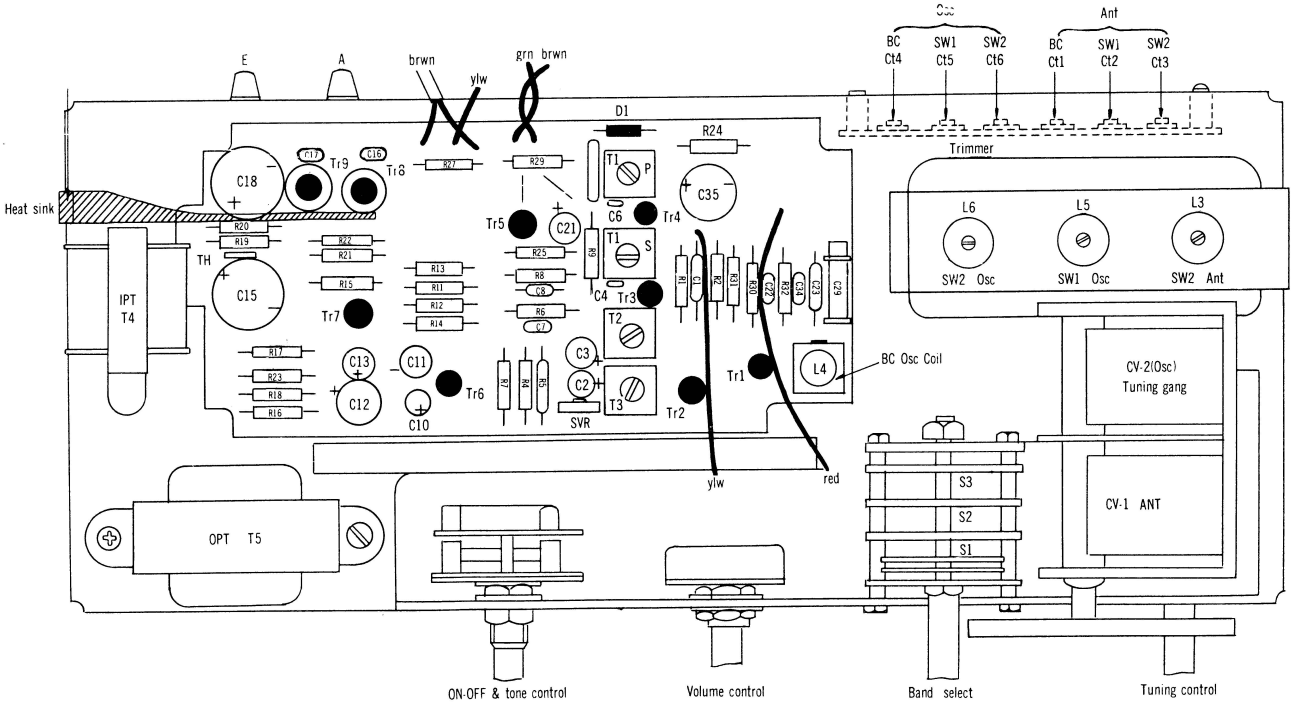

PART NO.	STOCK NO.	DESCRIPTION

TRANSISTORS

Tr 1	2SA223	Local oscillator
Tr 2	2SA222	Mixer
Tr 3	2SA322	1st IF amplifier
Tr 4	2SA203	2nd IF amplifier
Tr 5	2SB185	Audio pre-amplifier
Tr 6	2SB185	Audio amplifier
Tr 7	2SB185	Driver
Tr 8, 9	2SB272	Power amplifier

DIODE & THERMISTOR

D	1S188	Detector & AGC
TH	SDT-06	Temperature compensator

COILS

L1, L2	R-S8730a	Antenna coil assembly	
	R-W2179	Antenna coil	BC & SW1
	R-S8823a	Coil assembly	
L 3	R-W2053	Antenna coil	SW2
L 5	R-W8037(1)	Oscillator coil	SW1
L 6	R-W8121a	Oscillator coil	SW2
L 4	R-W8095a	Oscillator coil	BC
	R-26877	Frame antenna	

TRANSFORMERS

T 1	R-W5T027	1st IF transformer	Primary 50 KΩ
T 2	R-W5T028	1st IF transformer	Secondary 1.2KΩ
T 3	R-W5T009	2nd IF transformer	50 K : 300Ω
T 4	R-W5T023	3rd IF transformer	30 K : 5KΩ
T 5	R-W6228	Input transformer	3.5 K : 1.5 KΩ
T 6	R-W6227	Output transformer	150 Ω : 4 Ω

CONTROLS

	R-C0041	6-block trimmer
	R-C1051	Tuning gang
	R-R12435	Volume control
	R-R11010	Semi-fixed resistor
	R-S4039	Rotary switch On-Off & Tone
	R-S4270	Rotary switch Band select
	R-S4106	Slide switch

LOUDSPEAKER

	R-S6256	Speaker 6″ permanent dynamic 4Ω

PART NO.	STOCK NO.	DESCRIPTION	

ELECTROLYTIC CAPACITORS

C 2	R-C9079	10μF	3WV
C 3	R-C9080	30μF	3WV
C 9	R-C9098	2μF	10WV
C 10	R-C9080	30μF	3WV
C 11	R-C9080	30μF	3WV
C 12	R-C9105	30μF	6WV
C 13	R-C9080	30μF	3WV
C 15	R-C9074	200μF	10WV
C 18	R-C9074	200μF	10WV
C 21	R-C9080	30μF	3WV
C 35	R-C9091	120μF	10WV

PART NO.	DESCRIPTION		

FIXED CAPACITORS

C 1	0.01 μF	+30, -20%	50V
C 4	3 pF	± 0.5 pF	50V
C 5	0.05 μF	+30, -20%	50V
C 6	7 pF	±10%	50V
C 7	0.05 μF	+80, -20%	50V
C 8	0.04 μF	+80, -20%	50V
C 14	0.03 μF	+30, -20%	50V
C 16	0.005μF	+30, -20%	50V
C 17	0.005μF	+30, -20%	50V
C 22	0.02 μF	+30, -20%	50V
C 23	0.005μF	+30, -20%	50V
C 24	0.001μF	+30, -20%	50V
C 25	380 pF	±10%	500V
C 26	0.005μF	+30, -20%	50V
C 27	0.002μF	+30, -20%	50V
C 28	0.01 μF	+30, -20%	50V
C 29	460 pF	±3.5%	500V
C 30	1800 pF	±10%	35V
C 31	6500 pF	±10%	250V
C 32	40 pF	±10%	50V
C 34	0.05 μF	+80, -20%	50V
C 36	15 pF	±10%	50V
C 37	7 pF	±10%	50V
C 38	15 pF	±10%	50V
C 39	10 pF	±10%	50V
C 40	0.05 μF	+80, -20%	50V

PART NO.	DESCRIPTION

FIXED RESISTORS

R	1	55 K ohms	±10%	½W or ¼W
R	2	1.2K ohms	±10%	½W or ¼W
R	3	6.8 ohms	±10%	½W or ¼W
R	4	82 K ohms	±10%	½W or ¼W
R	5	1.2K ohms	±10%	½W or ¼W
R	6	8.2K ohms	±10%	½W or ¼W
R	7	56 K ohms	±10%	½W or ¼W
R	8	1.2K ohms	±10%	½W or ¼W
R	9	5.6K ohms	±10%	½W or ¼W
R	10	330 K ohms	±10%	½W or ¼W
R	11	33 K ohms	±10%	½W or ¼W
R	12	10 K ohms	±10%	½W or ¼W
R	13	1.5K ohms	±10%	½W or ¼W
R	14	1.8K ohms	±10%	½W or ¼W
R	15	15 K ohms	±10%	½W or ¼W
R	16	5.6K ohms	±10%	½W or ¼W
R	17	1 K ohms	±10%	½W or ¼W
R	18	10 ohms	±10%	½W or ¼W
R	19	56 ohms	±10%	½W or ¼W
R	20	2.2K ohms	±10%	½W or ¼W
R	21	220 ohms	±20%	½W or ¼W
R	22	3.3 ohms	±10%	½W or ¼W
R	23	470 ohms	±10%	½W or ¼W
R	24	330 ohms	±20%	½W or ¼W
R	25	5.6K ohms	±10%	½W or ¼W
R	26	10 K ohms	±10%	½W or ¼W
R	27	18 K ohms	±10%	½W or ¼W
R	28	82 K ohms	±10%	½W or ¼W
R	29	15 K ohms	±10%	½W or ¼W
R	30	4.7K ohms	±10%	½W or ¼W
R	31	2.2K ohms	±10%	½W or ¼W
R	32	39 ohms	±10%	½W or ¼W
R	33	220 ohms	±10%	½W or ¼W
R	34	560 ohms	±10%	½W or ¼W
R	35	P-CXC002 CR-Package		

STOCK NO.	DESCRIPTION

MISCELLANEOUS

R-46362b	Cabinet	
R-44005	U-groove rubber	
R-46363a	Baffle plate	
R-27033	Badge	"SANYO Hi-Fi SOUND"
R-12059	Speed washer	-Badge mtg.-
R-26803	Back screen	-Alminium-
R-31531a	Dial	-Plastic-
R-26805	Metal strip	
R-11356	Slide rail	
R-S8727	Pointer assembly	
R-423226	Back cover	
R-S7066	Knob screw	
R-35170	Battery holder tube	
R-S8732L	Knob	
R-S8758	Chassis	
R-111895	Pulley mtg. arm	
R-111898	Pulley mtg. metal	
R-24002	Pulley shaft	
R-34004	Pulley	
R-S8386b	Drum	
R-15039	Tension spring	
	Dial cord	0.5∅
R-S8037	Tuning shaft assembly	
R-11628	Angle	-Ferrite antenna mtg.-
R-26100	Holder	-Ferrite antenna mtg.-
R-11583	Lever	-Ferrite antenna mtg.-
R-44030	Lever knob	
R-S3007	Terminal strip	-4 term.-
R-S8146	Terminal board	-Ant. & earth-
R-S3036	Terminal board	-Phono terminal-
R-S1081	Plug	-Phono plug-
R-S3046	Terminal strip	-5 term.-
R-S8715	Battery compartment assembly	

SPECIFICATIONS SUBJECT TO CHANGE WITHOUT NOTICE