T27. TOSHIBA MODEL 9L-790R

ALIGNMENT PROCEDURE

The following equipment is required for alignment:

1. Signal generator with a frequency range of at least from 200 KC to 25 MC, AM.
2. Vacuum tube volt meter.
3. Sweep signal generator with a sweep range of at least 455 KC and center frequency of 10.7 MC marker (Ext. marker may be used.)
4. Oscilloscope with a wide range amplifier of approximately 100 KC.
5. Test loop, a coil of any size wire, one turn or more.
6. For alignment points, see schematic.

NOTES:

During alignment keep the signal generator outputs at the lowest level that will maintain a useable output from the set.

Ground connection of signal generator ····· chassis ground

Generator modulation (AM) ····· 30%, 400%

Step	Generator Connection	Generator Frequency	Band Setting	Position of Tuning gang	Meter or Oscilloscope Connection	Adjustment	Remarks
				MW ALIGNMENT			
1.	Test Loop	455 KC	MW	Tuning Gang fully closed	Across Voice Coil	T-1, 2, 3	Adjust for maximum
2.	Same	510 KC	Same	Tuning Gang fully closed	Same	L 4 AM (Osc. Coil)	Same
3.	Same	1640 KC	Same	Tuning Gang fully open	Same	C 4 AM (Osc. Trimmer)	Same
4.	Repeat Step 2 and 3						
5.	Same	600 KC	Same	600 KC	Same	L 1 AM (Ant. Coil)	Same
6.	Same	1400 KC	Same	1400 KC	Same	C 2 AM (Ant. Trimmer)	Same
7.	Repeat Step 5 and 6						
				SW 1 ALIGNMENT			
1.	Test Loop	1.57 MC	SW 1	Tuning Gang fully closed	Across Voice Coil	L 5 SW 1 (Osc. Coil)	Adjust for maximum
2.	Same	4.1 MC	Same	Tuning Gang fully open	Same	C 4 SW 1 (Osc. Trimmer)	Same
3.	Repeat step 1 and 2						
4.	Same	1.7 MC	Same	1.7 MC	Same	L 2 SW 1 (Ant. Coil)	Same
5.	Same	3.7 MC	Same	3.7 MC	Same	C 3 SW 1 (Ant. Trimmer)	Same
6.	Repeat step 4 and 5						
				SW 2 ALIGNMENT			
1.	Directly	3.8 MC	SW 2	Tuning Gang fully closed	Across Voice Coil	L 6 SW 2 (Osc. Coil)	Adjust for maximum
2.	Same	10.5 MC	Same	Tuning Gang fully open	Same	C 4 SW 2 (Osc. Trimmer)	Same
3.	Repeat step 1 and 2						
4.	Same	4 MC	Same	4 MC	Same	L 2 SW 2 (Ant. Coil)	Same
5.	Same	10 MC	Same	10 MC	Same	C 3 SW 2 (Ant. Trimmer)	Same
6.	Repeat step 4 and 5						
				SW 3 ALIGNMENT			
1.	Thru 10 PF	9.7 MC	SW 3	Tuning gang fully closed	Across voice coil	L 7 SW 3 (Osc. Coil)	Adjust for maximum
2.	Same	22.5 MC	Same	Tuning gang fully open	Same	C 4 SW 3 (Osc. Trimmer)	Same
3.	Repeat step 1 and 2						
4.	Same	10 MC	Same	10 MC	Same	L 3 SW 3 (Ant. Coil)	Same
5.	Same	21 MC	Same	21 MC	Same	C 3 SW 3 (Ant. Trmmer)	Same
6.	Repeat step 4 and 5						

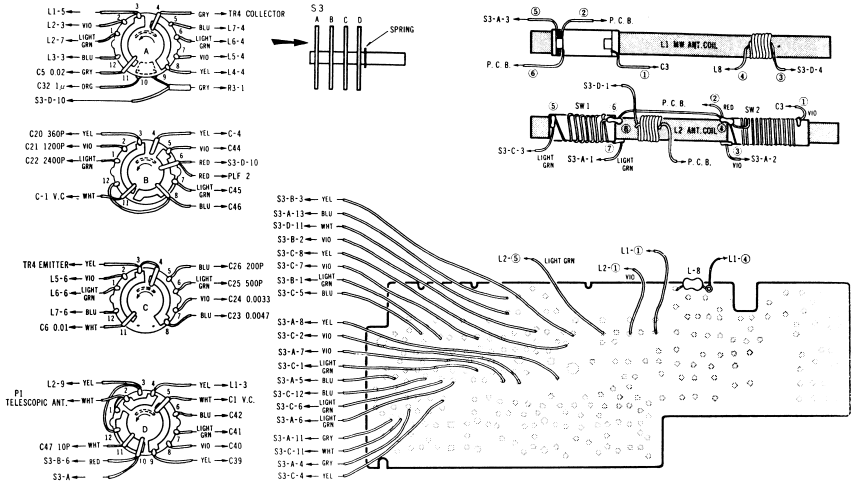

COIL TO SWITCH CONNECTION

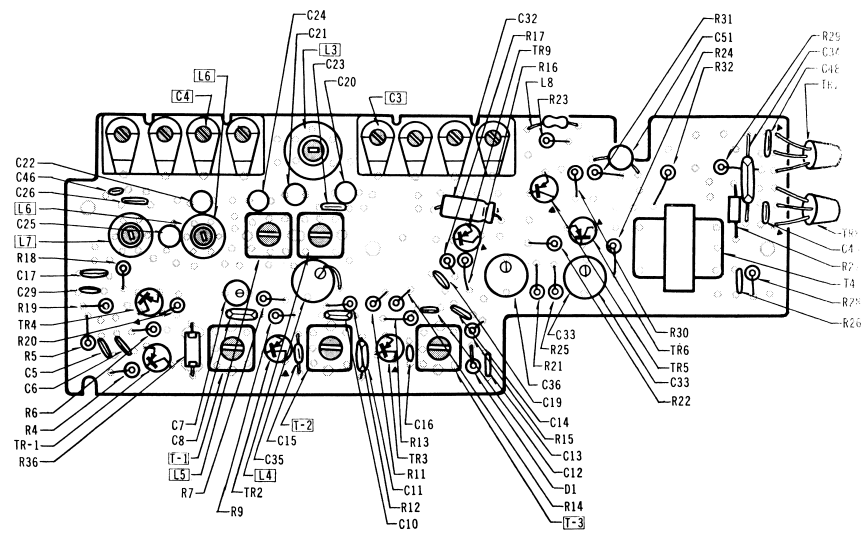

TOP VIEW

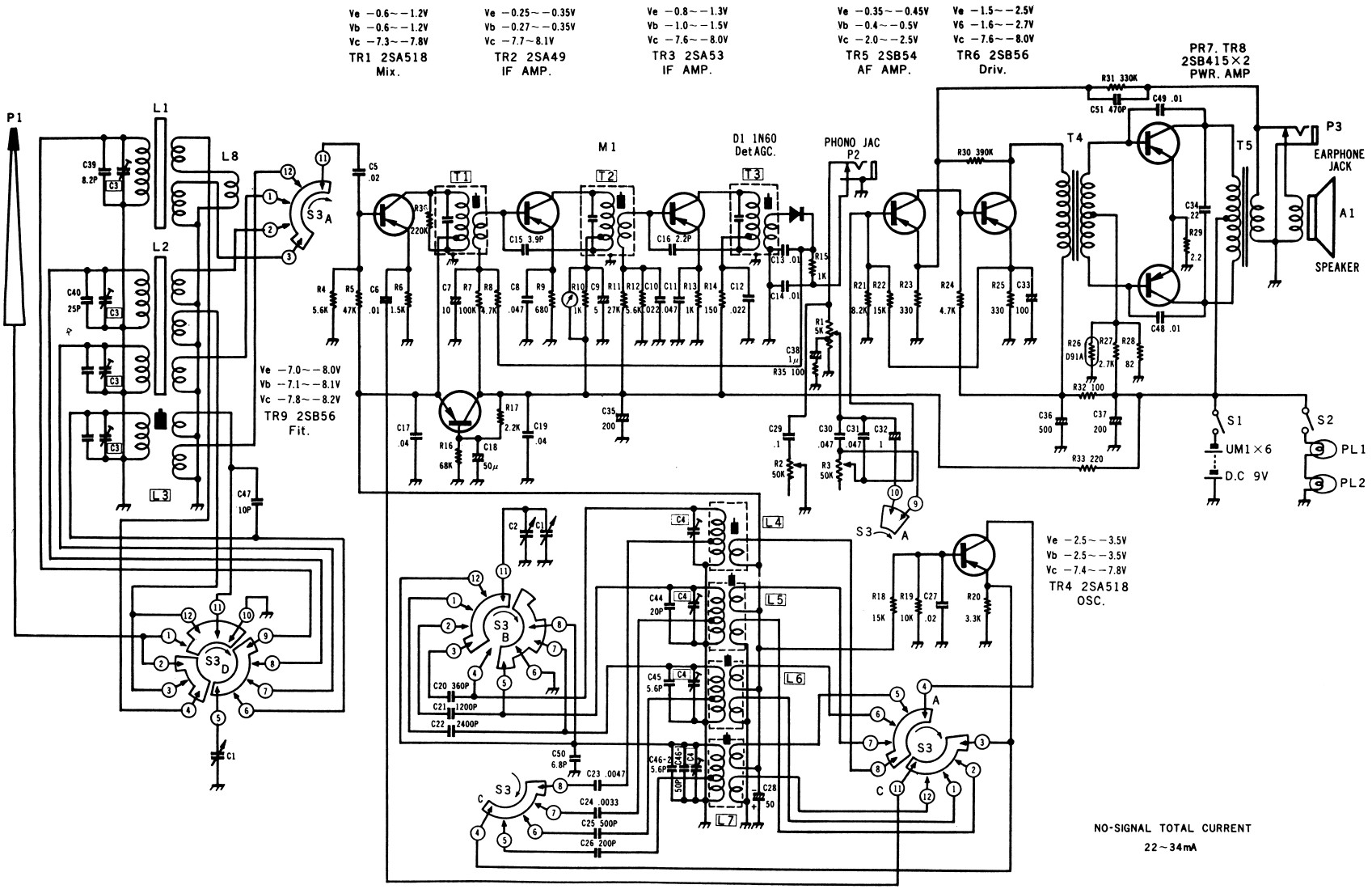

SCHEMATIC DIAGRAM

TOSHIBA TRANSISTOR RADIO SERVICE DATA

SPECIFICATIONS

FREQUENCY RANGE:		MW 520~1600 KC
		SW1 1.6~4 MC
		SW2 4~10 MC
		SW3 10~22 MC
INTERMEDIATE FREQUENCY:		455 KC
POWER SOURCE:		UM-1 ("D")×6·····9 V
POWER OUTPUT:		2 W (max.)
SPEAKER:		4"×6" P.M.D. Type
ANTENNAS:		Ferrite Core Antennas (MW, SW1, SW2) and Telescopic Antenna (SW3)
JACKS:		Earphone Jack×1 Phono Jack×1
TRANSISTORS & DIODE:		
TR 1	2 SA 518	MIXER
TR 2	2 SA 49	IF Amplifier
TR 3	2 SA 53	IF Amplifier
TR 4	2 SA 518	Oscillator
TR 5	2 SB 54	AF Amplifier
TR 6	2 SB 56	AF Amplifier
TR 7, TR 8	2 SB 415	Power Amplifier
TR 9	2 SB 56	Ripple Filter
D 1	1 N 60	Detector, AGC
DIMENSIONS:		W···13" H···9¼" D···4⅞"
WEIGHT:		7.6 Lbs. (With Batteries)
ACCESSORY:		Earphone

CHASSIS REMOVAL

1. Remove the five knobs (FINE TUNE, TUNE, VOLUME TREBLE and BASS) and the side knob (BAND SELECT).
2. Open the battery lid by removing the two screws.
3. Open the cabinet back by removing five screws marked (※) shown in the Fig 1.
4. Remove the six screws marked (※) shown in the Fig 2. Carefully pull the chassis from the cabinet.

Remarks:

When separating the chassis, do not loosen any screw except the ones painted with white enamel.

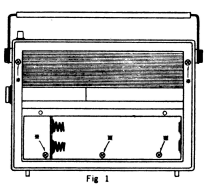

Fig 1

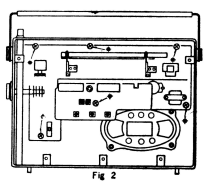

Fig 2

DIAL CORD STRINGING

1. Set the variable capacitor to the capacitance.
2. Set the cord as number in the diagram.

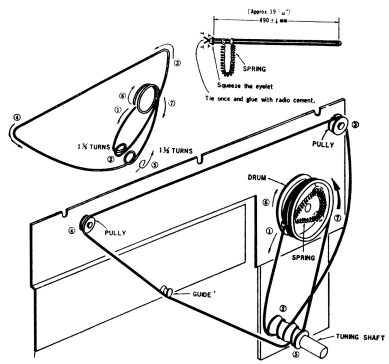

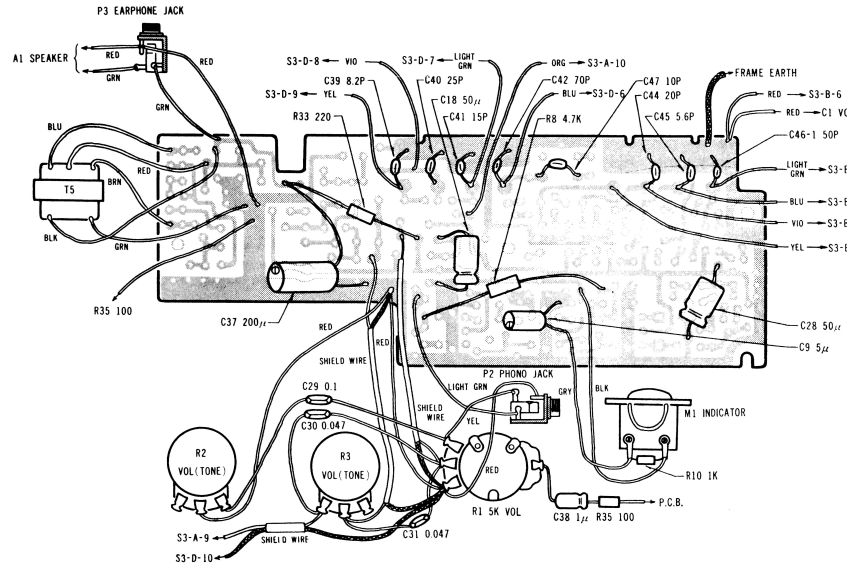

BOTTOM VIEW

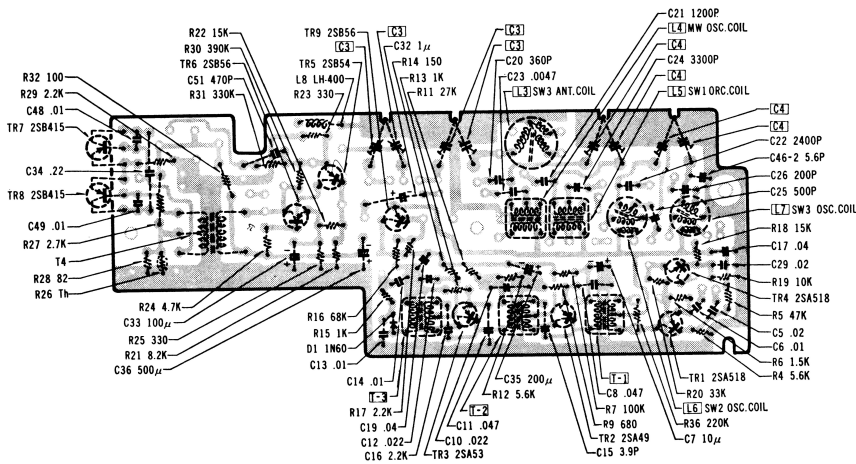

BOTTOM VIEW