Service
Service
Service

Service Manual

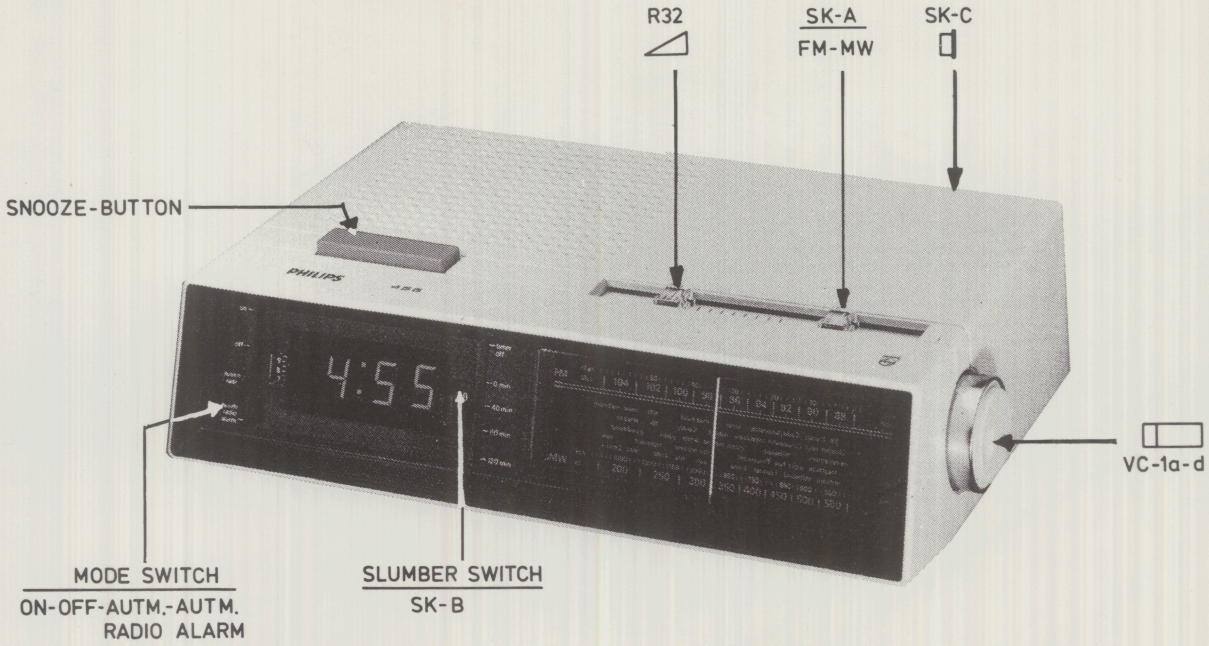

MW: 520-1605 kHz (577–187 m)
FM/00/15/22: 87.5-104 MHz
FM/01/45 : 87.5-108 MHz
IF-FM = 10.7 MHz

IF-AM/00/01/45 = 452 kHz
/15 = 470 kHz
/22 = 460 kHz
MAINS SUPPLY: 220V. 50 Hz ~
OUTPUT: 800 mW. d = 10%. 8Ω

8308B7

Subject to modification

PHILIPS

Clock radio 90RS250/45

Service
Service
Service

Service Manual

FM: 87.5 - 108 MHz
MW: 520 - 1605 kHz (577 - 187m)
IF: FM = 10.7 MHz
IF: AM = 452 kHz
MAINS SUPPLY: 240V~ 50 Hz
OUTPUT: 450 mW - 8Ω d=10%

PHILIPS

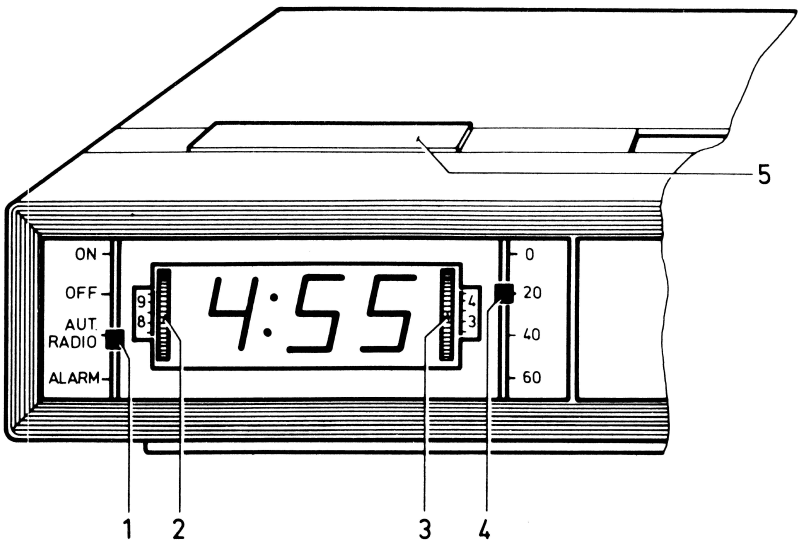

8262B7

Fig. 1

When the plug has been inserted in the wall socket, the clock starts running.

THE CLOCK AND THE WAKING MECHANISM (see Fig. 1)

1. **Control switch**

   Position "ON":
   The radio section is functioning.

   Position 'OFF":
   The radio section has been or is being switched on. This depends on the position of the slumber switch.

   Position "Aut-Radio":
   The radio section is switched on when the clock time and the waking time agree.

   Position "Aut-Alarm":
   The buzzer is switched on when the clock time and the waking time agree. The buzzer is switched off with push-button 5.

2. **Waking time button (24-hour waking system)**

3. **Clock time button**

4. **Slumber switch**

   By pulling down the lever one sets the time after which the radio section will be switched off.
   First, the on/off switch had to be set to position OFF.

5. **"Snooze Button"**

   This push-button switches off the buzzer and switches the slumber switch on consequently, the radio section is switched on.

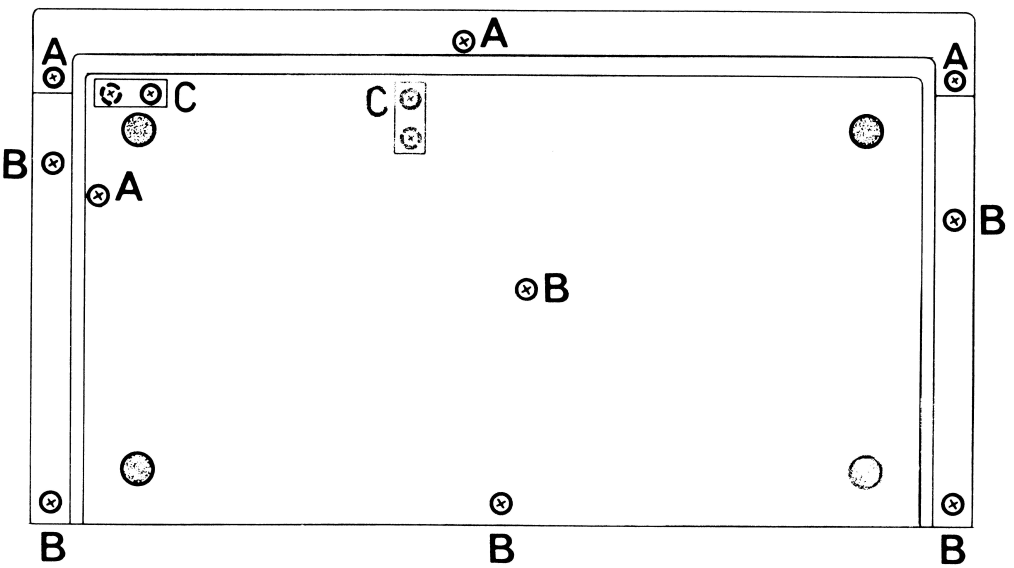

to remove front : A
to remove cabinet top : B
to remove clock unit : C

8312B7

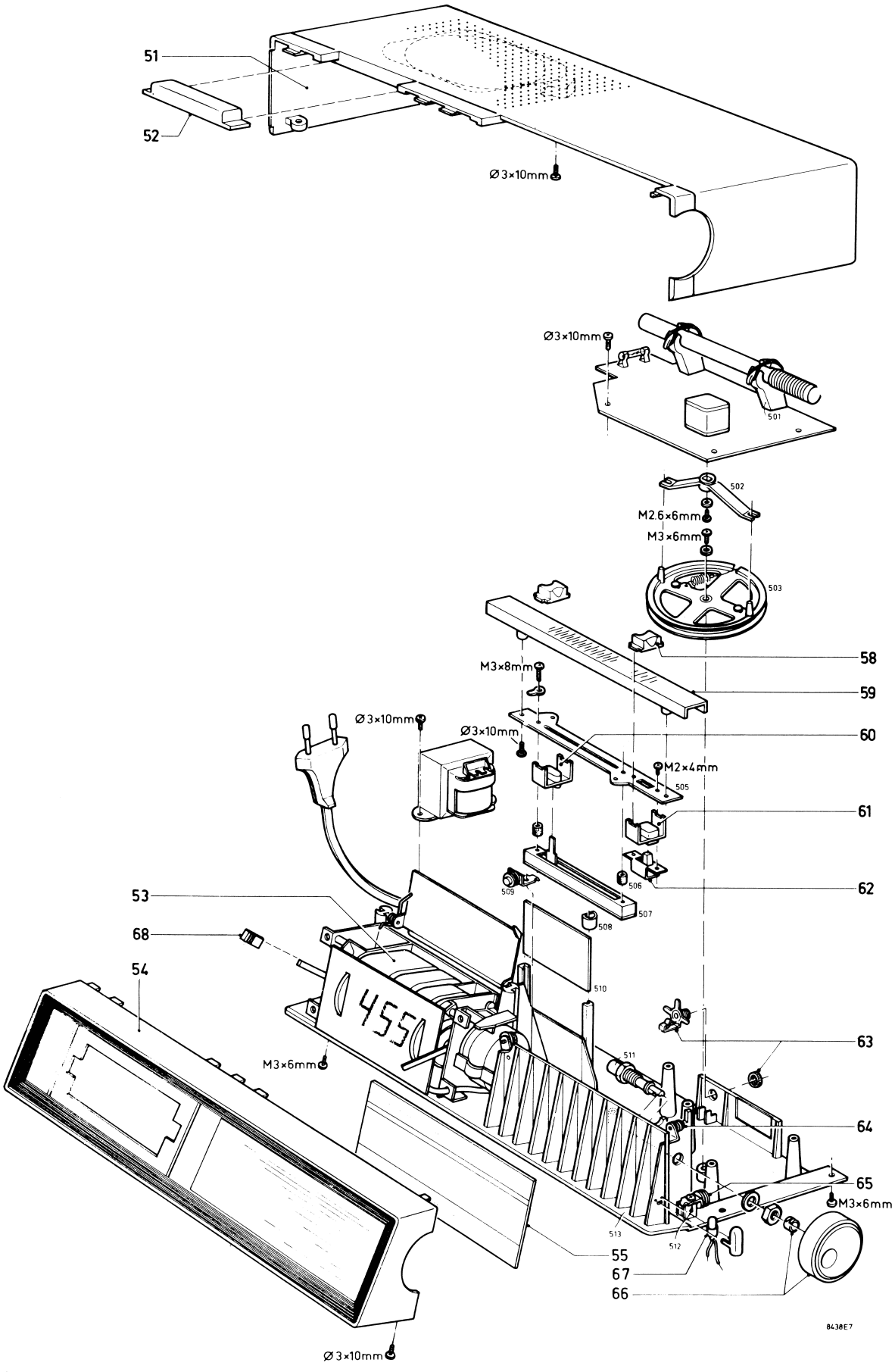

51	4822 425 30141	55	4822 459 40418 /01/45	60	4822 404 10284	65	4822 528 80622
52	4822 410 21739	56	4822 450 80452	61	4822 404 10285	66	4822 413 50869
53	4822 344 40046	57	4822 321 30214	62	4822 277 20177	67	4822 134 40325
54	4822 426 50193	58	4822 411 60345	63	4822 267 30258	68	4822 411 20222
55	4822 459 40417 /00/15/22	59	4822 333 30082	64	4822 528 80578		

- TS -		
TS1,2,3,5,6	BF494	5322 130 44195
TS4	BF495	4822 130 40947
TS7	BC548B	4822 130 40937
TS8	BC558A	4822 130 40962
TS9	BC548	4822 130 40938
TS10,11	BC328/338 pair	4822 130 40942

- D -		
D3,4	AA119 pair	4822 130 30692
D6,11	AA119	4822 130 40229
D1,2,5	BA216	5322 130 30702
D7,8,9,10	BY188B	4822 130 30829

- S -		
S5,6	FM - IFT	4822 153 50197
S7,9	FM - IFT	4822 153 50198
S8,10	AM - IFT	4822 153 10287
S11	AM - DET.	4822 153 10232
S12	FM - DET. prim.	4822 153 10237
S13	FM - DET. sec.	4822 156 30442
S15	Osc. coil	4822 156 30525
S16	AM - IFT	4822 156 30407
S3,19,20	FM- IF Trap coil	4822 157 50791
S18	Power transformer	4822 146 20513

- C -		
C9	Cer.cap. 3 pF ± ¼pF	4822 122 30019
C6	Cer.cap. 4 pF ± ¼pF	4822 122 31043
C34	Cer.cap. 5 pF ± ¼pF	4822 122 31045
C17	Cer.cap. 6 pF ± ¼pF	4822 122 31224
C4,11	Cer.cap. 23 pF ± 5 %	4822 122 40094
C7	Cer.cap. 30 pF ± 5 %	4822 120 33066
C28,33,37	Cer.cap. 10 kpF-20 %	4822 122 30043
C3,13,16,18,20, 22,26,48,49, 53,54,55,56	Cer.cap. 20 kpF - 20 %	4822 122 30103
C5,14,19,32, 35,52	Cer.cap. 40 kpF - 20 %	4822 122 31152
C41	Cer.cap. 100 kpF-20 %	4822 122 31161
VC1	Varco	4822 125 20189

Miscellaneous		
	Ferrite bar	4822 526 10105
S14	Antenna coil MW	4822 158 60397
	Loudspeaker 8 Ω	4822 240 30099
	Fuse 315 mAT	4822 253 30014

Safety regulations require that the set be restored to its original condition and that parts which are identical with those specified, be used.

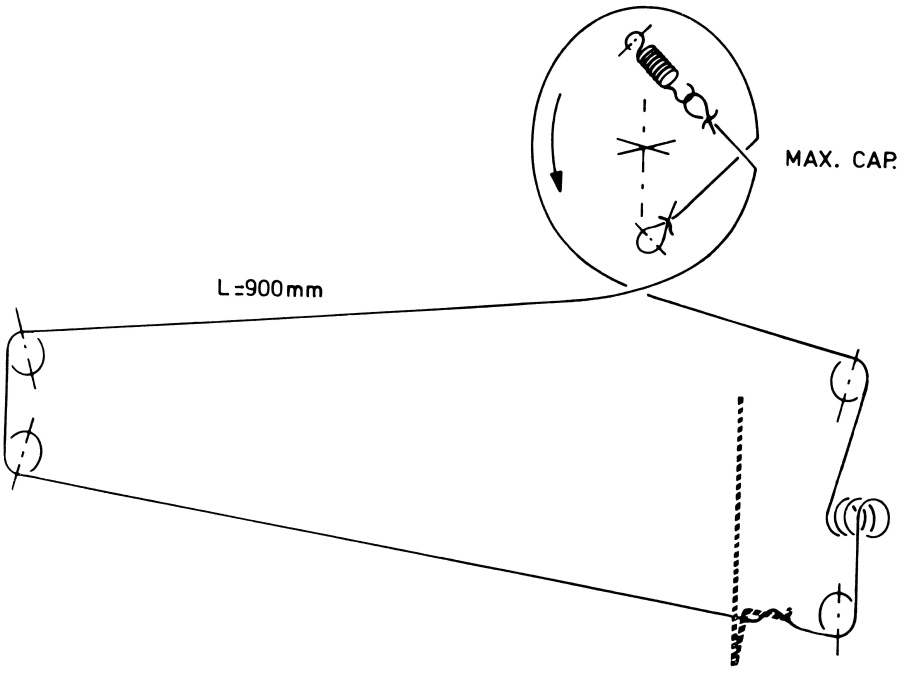

8050A12

S	3 5 1 2 4 6 15 7 16 8 10 9 12 11 13 20 19	S
C	13 7 8 9 12 4 11 14 15 16 33 32 50 35 49 42 43 44 45 46 24 28 38 31 47 29 48 52 54	C
C	10 6 2 3 1 5 34 18 20 17 19 23 36 21 22 27 26 25 37 30 51 53 55 56	C
R	5 1 3 9 6 22 23 24 45 26 44 11 33 34 15 36 17 38 40 42 21 41 18	R
R	2 4 8 25 10 7 13 14 27 12 35 16 37 28 39 30 29 43 20 19	R

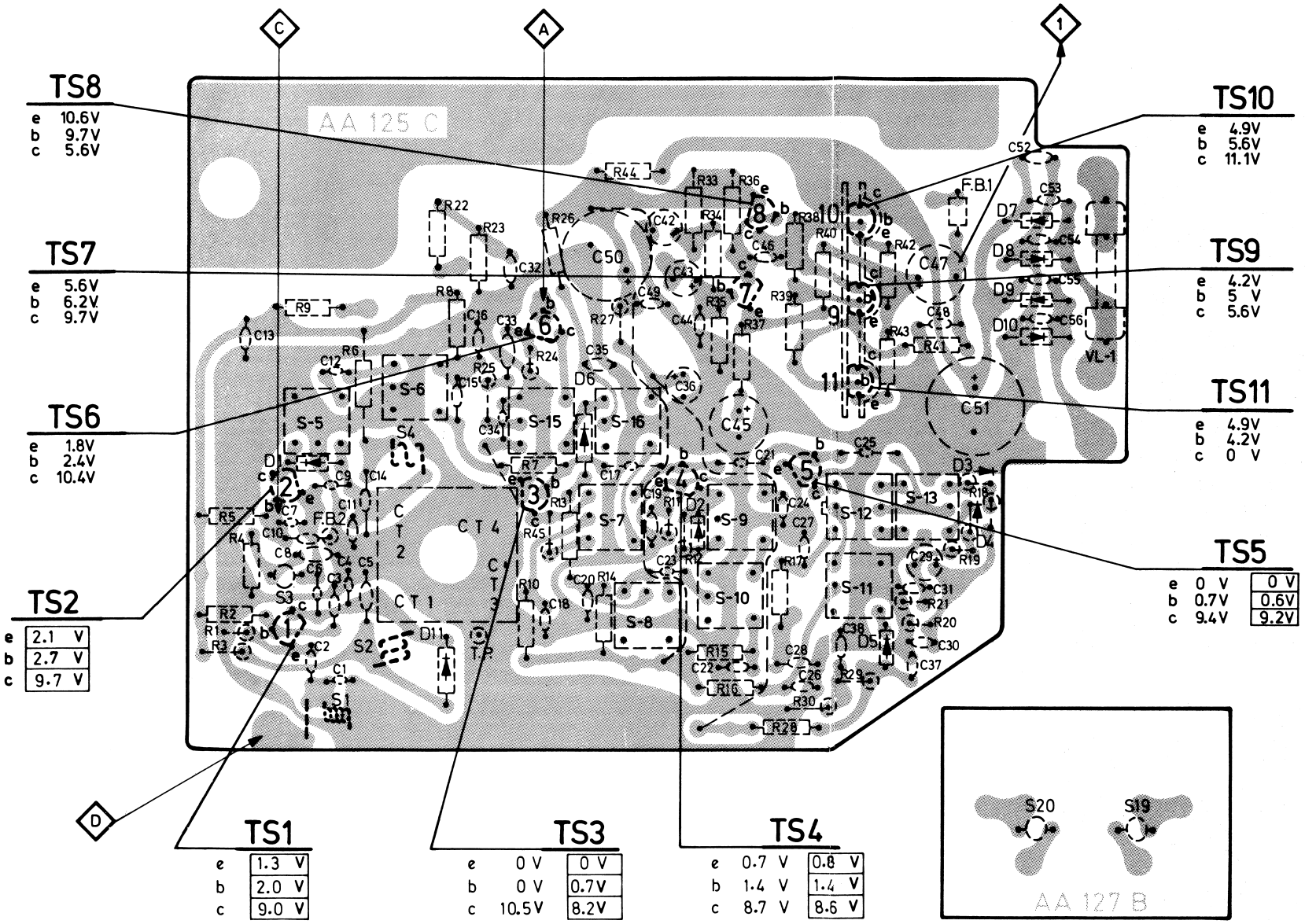

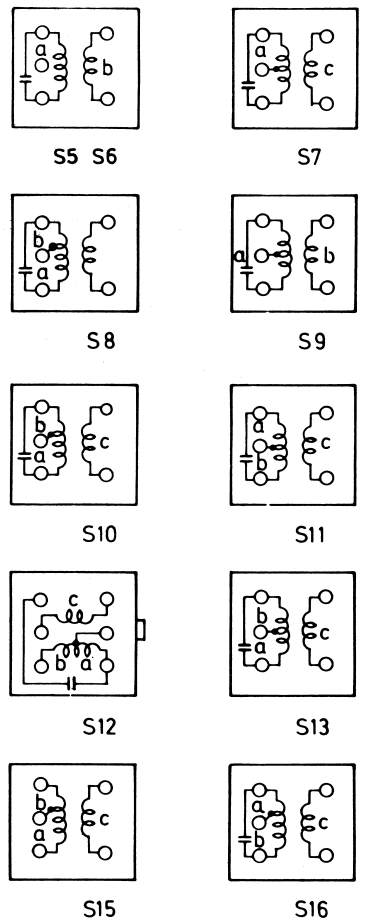

8049C12

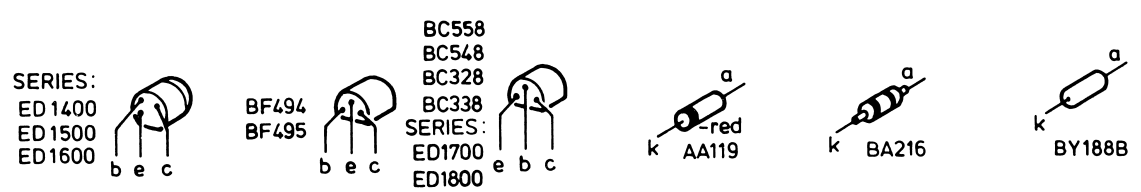

CS54943

S	3 5 1 2 4 6 15 7 16 8 10 9 12 11 13 20 19	S
C	13 7 8 9 12 4 11 14 15 16 33 32 50 35 49 42 43 44 45 46 24 28 38 31 47 29 48 52 54	C
C	10 6 2 3 1 5 34 18 20 17 19 23 36 21 22 27 26 25 37 30 51 53 55 56	C
R	5 1 3 9 6 22 23 24 45 26 44 11 33 34 15 36 17 38 40 42 21 41 18	R
R	2 4 8 25 10 7 13 14 27 12 35 16 37 28 39 30 29 43 20 19	R

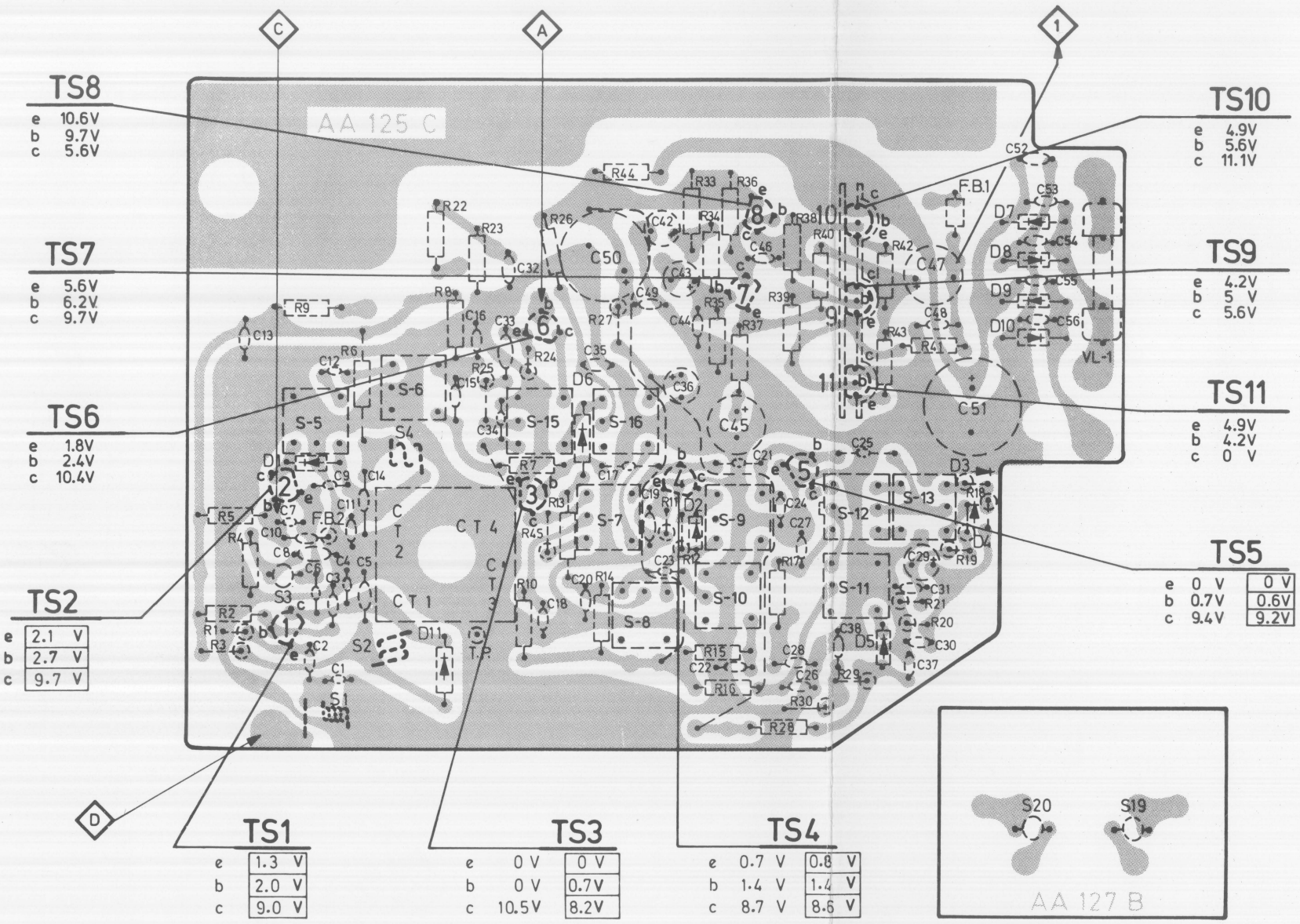

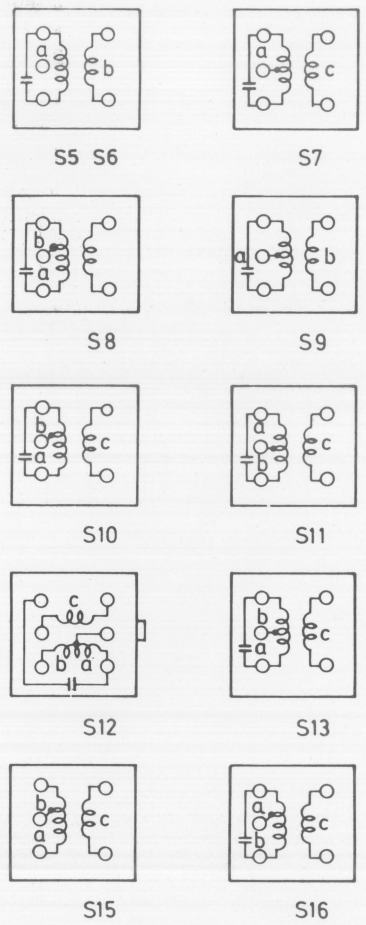

8049C12

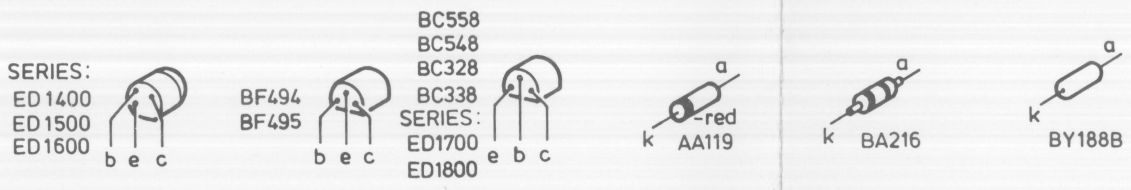

CS54943

Wave range SK . . .	Signal to				Adjust	Indication
MW: (520 - 1605 kHz)	/00/01/45 = 452 kHz /22 = 460 kHz /15 = 470 kHz via 20 nF		A	Min. cap.	S11	1 max.
					S10	
					S8	
					S16	
	512 kHz		B	Max. cap.	S15	1 max.
	1635 kHz			Min. cap.	CT4	
	580 kHz			Tune-in	S14a-b	
	1400 kHz				CT3	
FM: (87.5 - 104 MHz) (87.5 - 108 MHz)	10.7 MHz		C	Max. Cap.	S12	1 max.
					S9	
					S7	
					S6	
					S5	
					S13	1 min.
	/00/15/22	/01/45				
	86.5 MHz	86.5 MHz	D	Max. Cap.	S4	1 max.
	105 MHz	109 MHz		Min. Cap.	CT2	
	90 MHz	90 MHz		Tune-in	S2	
	103 MHz	106 MHz			CT1	
Repeat						

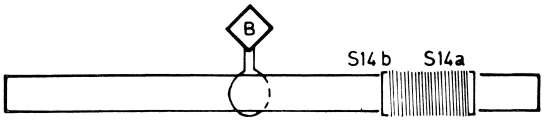

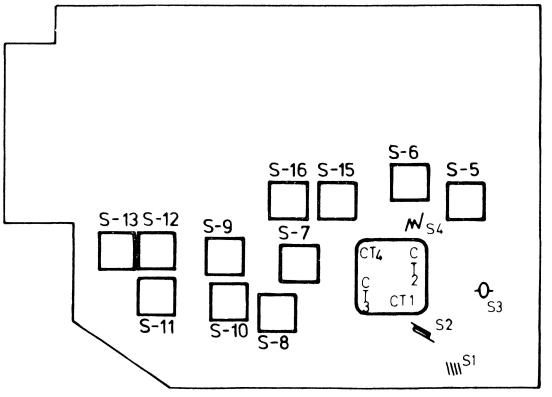

8048B12

CS54945

S	13 12 11 9 10 8 16 7 15 14b 6 4 2 14a 5 1 3 18 17 19 20 21	S
C	53 52 55 56 47 29 30 25 38 28 24 46 45 21 44 43 42 49 17 50 32 34 16 14 11 12 3 8 10 7 13	C
C	54 41 51 48 31 37 40 26 27 39 22 36 23 19 20 35 18 33 15 5 4 9 1 6 2	C
R	18 19 41 21 42 29 40 38 17 37 36 34 33 11 44 26 13 24 23 22 6 9 4 5 1	R
R	31 20 43 32 30 39 28 16 15 35 12 27 14 45 7 10 25 8 2 3	R

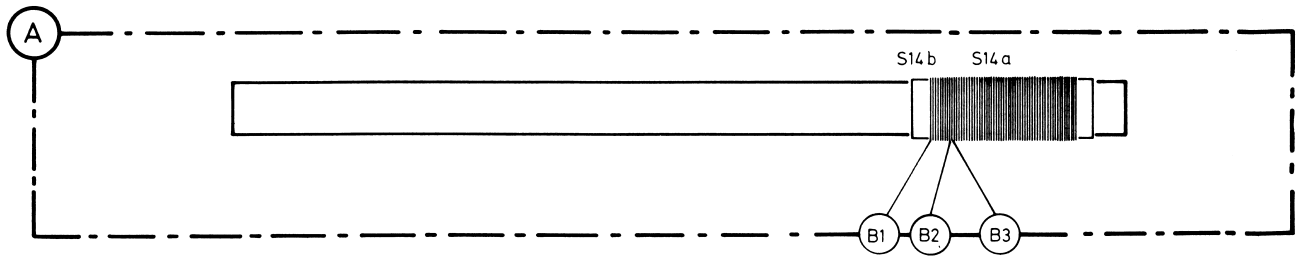

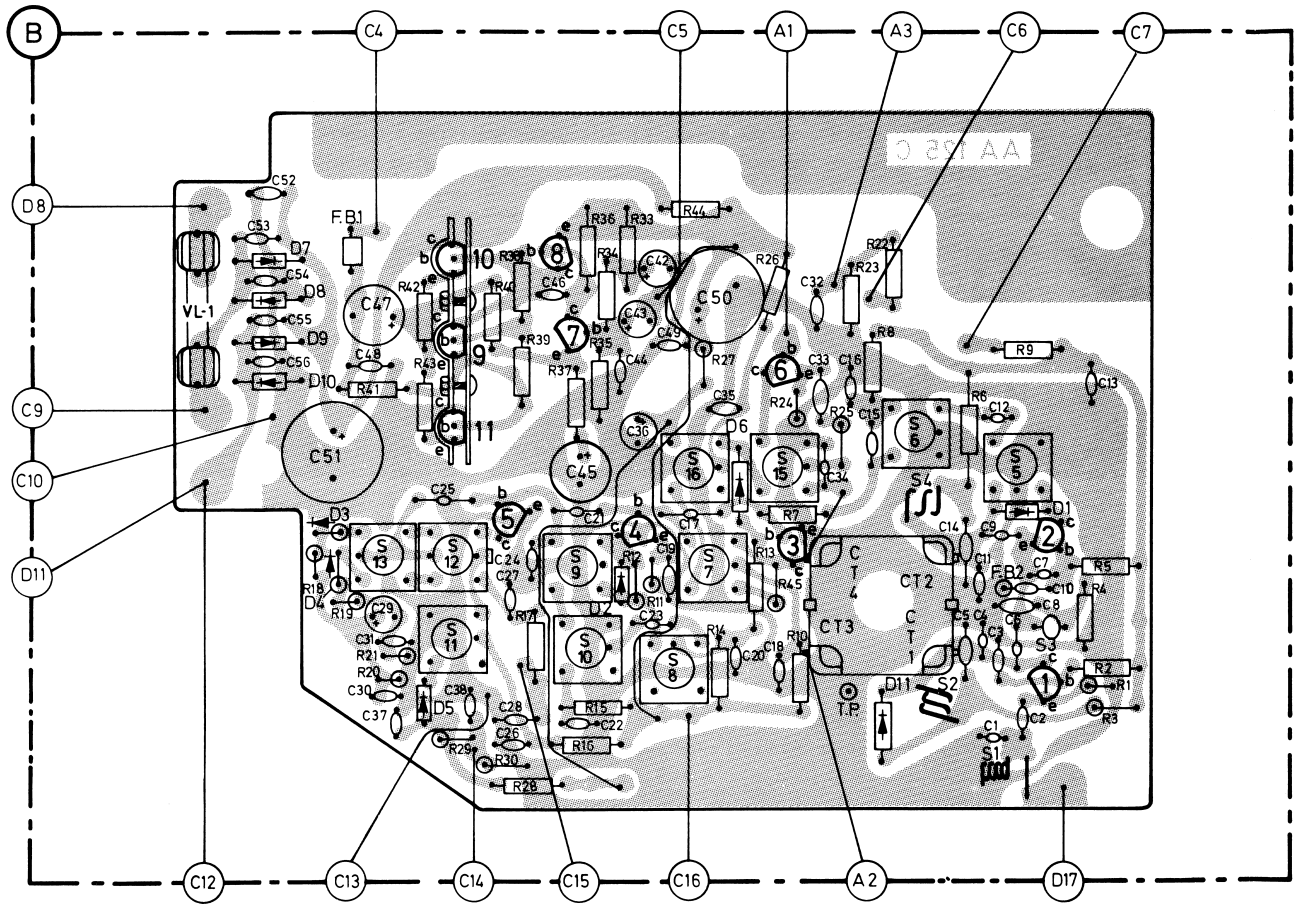

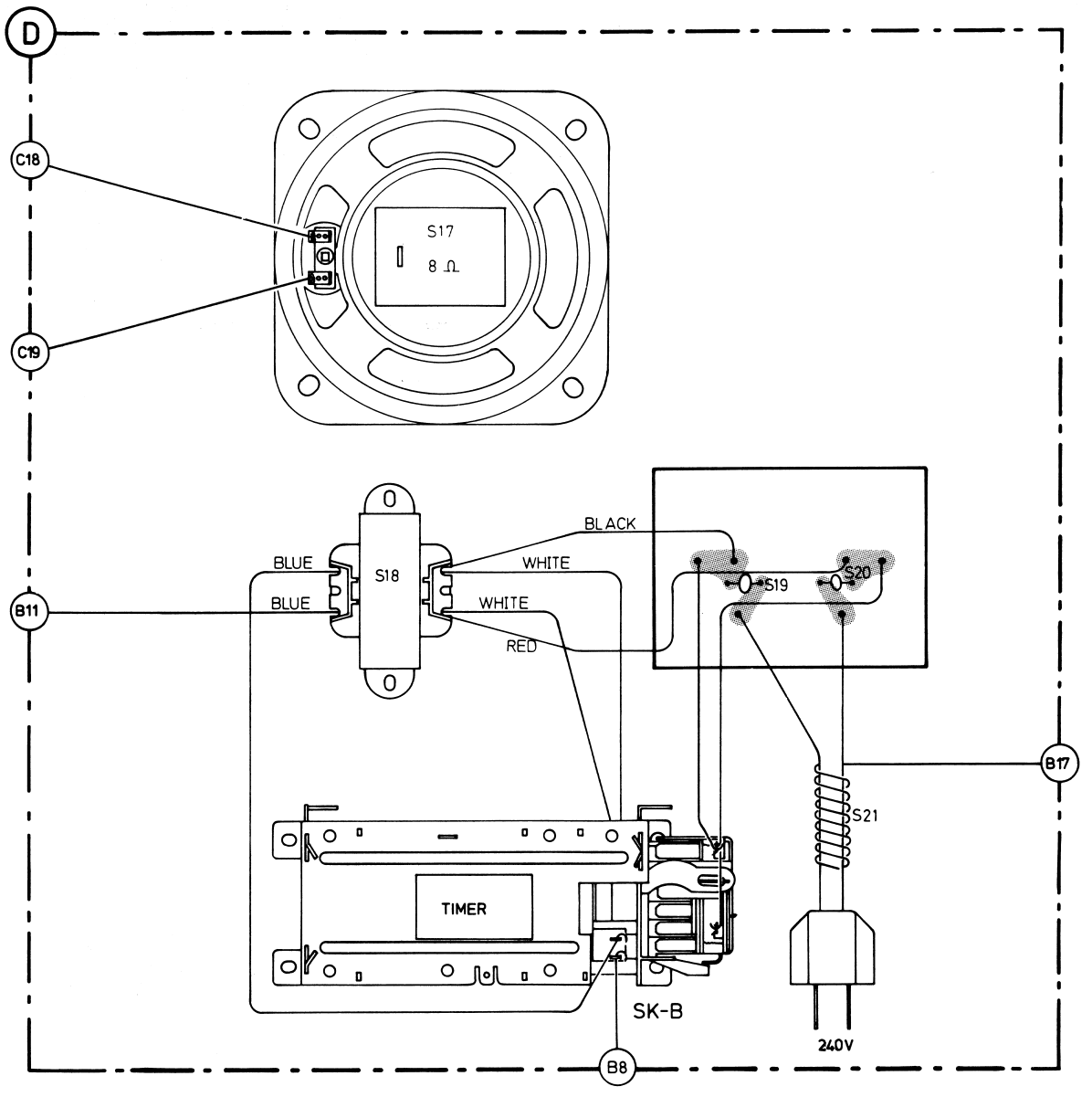

CS54944

| | | |