Service
Service
Service

Service Manual

IF - AM	452 kHz
IF - FM	10.7 MHz
MW	520 - 1605 kHz
FM	87.5 - 108 MHz
OUTPUT	600 mW - 8 Ω

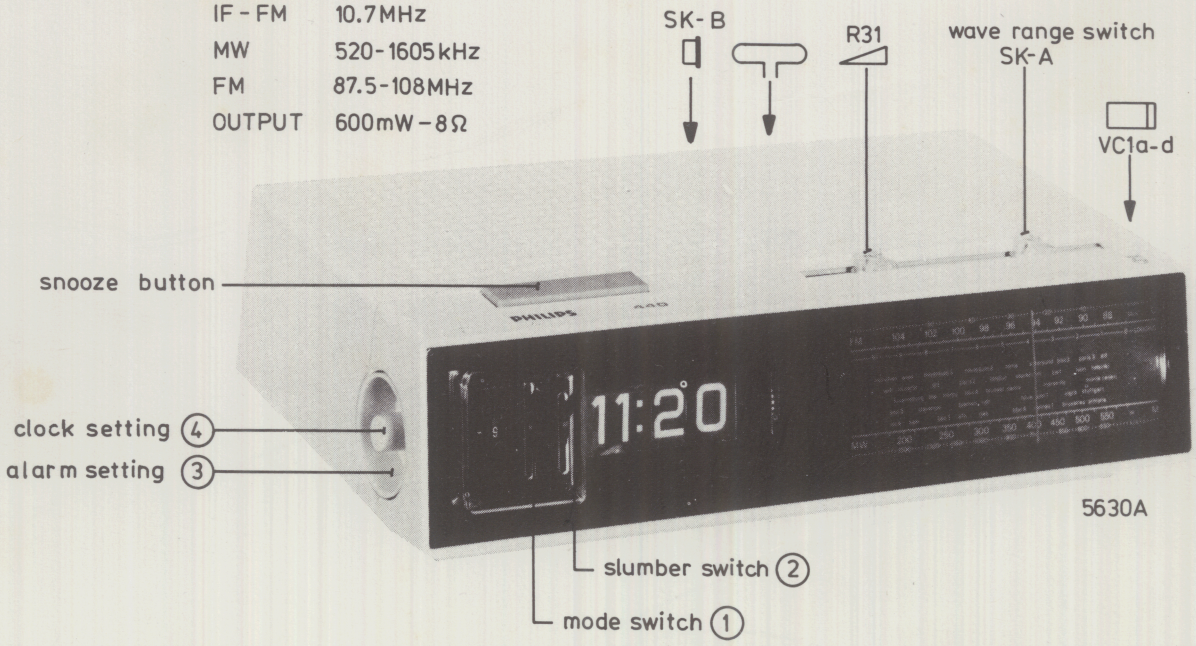

Safety regulations require that the set be restored to its original condition and that parts which are identical with those specified, be used.

Subject to modification

SEPTEMBER 1975

PHILIPS

Clock radio 90RS440/45S

Service
Service
Service

Service Manual

IF - AM	452 kHz
IF - FM	10.7 MHz
MW	520 - 1605 kHz
FM	87.5 - 108 MHz
OUTPUT	600 mW - 8 Ω

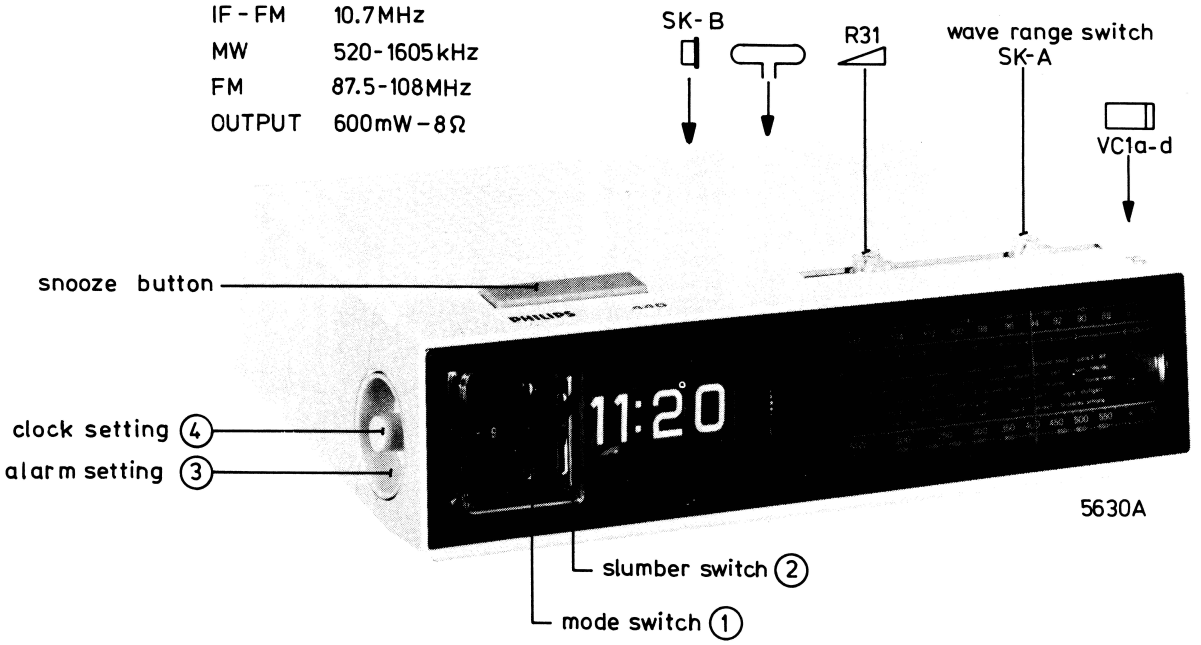

Safety regulations require that the set be restored to its original condition and that parts which are identical with those specified, be used.

Subject to modification

SEPTEMBER 1975

PHILIPS

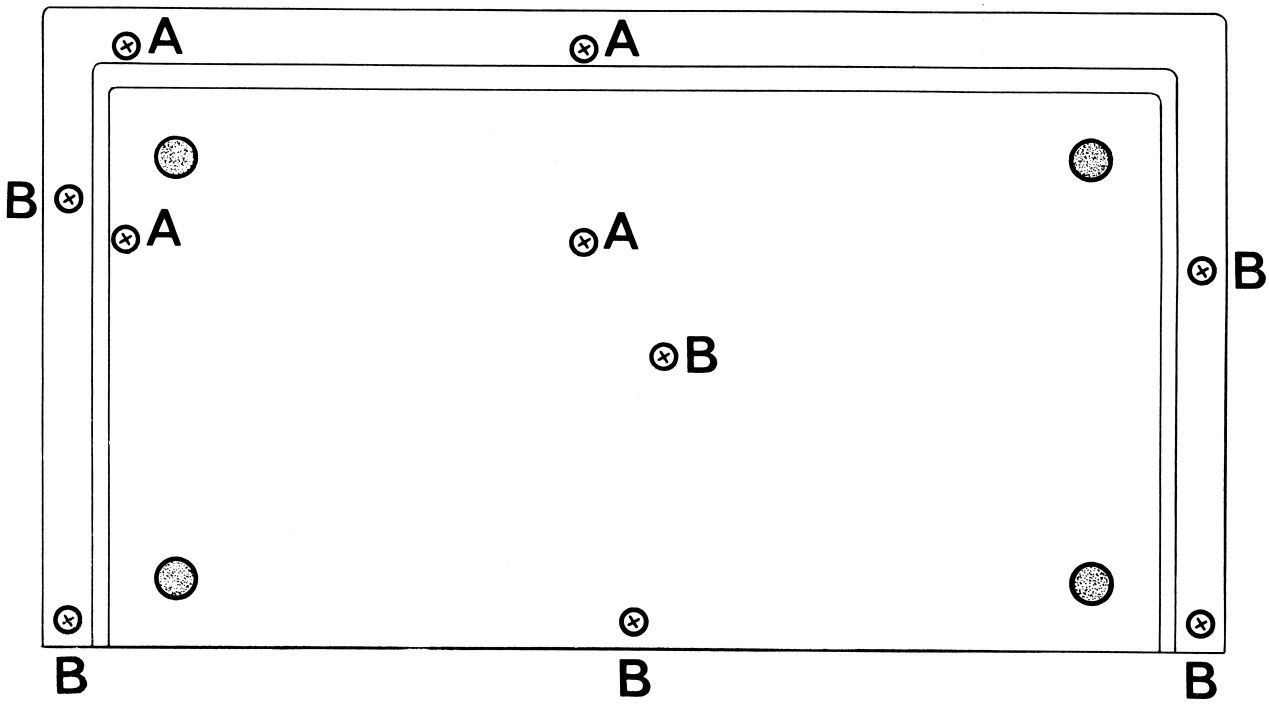

to remove clock unit : loosen screws A
to remove cabinet top : loosen screws B

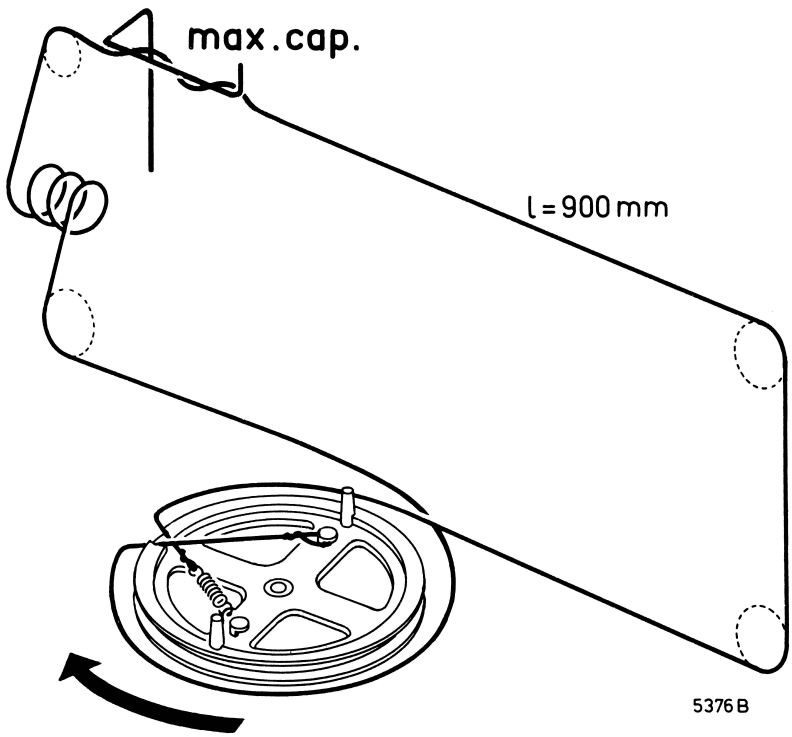

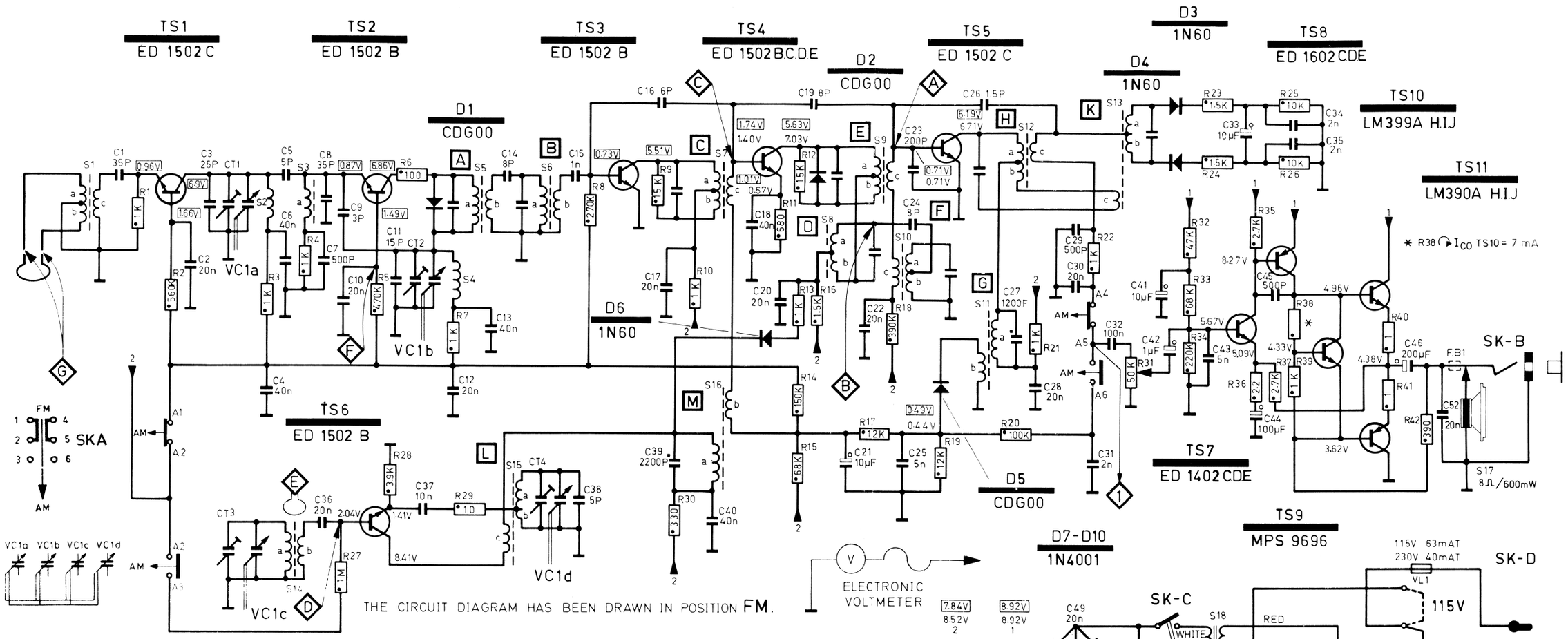

-TS-		
TS1	BF494	5322 130 44195
TS2	BF495	4822 130 40947
TS3	BF495	4822 130 40947
TS4	BF495	4822 130 40947
TS5	BF494	5322 130 44195
TS6	BF495	4822 130 40947
TS7	BC548B	4822 130 40937
TS8	BC558A	4822 130 40962
TS9	BC548	4822 130 40938
TS10	BC338	4822 130 40994
TS11	BC328	4822 130 40993

-D-		
D1	BA100	4822 130 30226
D2	BA100	4822 130 30226
D3	AA119	4822 130 40229
D4	AA119	4822 130 40229
D5	BA100	4822 130 30226
D6	AA119	4822 130 40229
D7	1N4001	5322 130 30197
D8	1N4001	5322 130 30197
D9	1N4001	5322 130 30197
D10	1N4001	5322 130 30197

-S-	
S5	4822 153 50197
S6	4822 153 50197
S7	4822 153 50198
S8	4822 153 10287
S9	4822 153 50198
S10	4822 153 10287
S11	4822 156 40619
S12	4822 153 10237
S13	4822 156 30442
S15	4822 156 30525
S16	4822 156 40615
S17	4822 240 30099
S18	4822 145 20147

-R-		
R31	Potmeter 50 kΩ	4822 105 10138
R40	1 Ω/¼ W - 10 %	4822 110 63027
R41	1 Ω/¼ W - 10 %	4822 110 63027

Miscellaneous

LA1	12 V - 90 mA	4822 134 40325
VL1	40 mA.T.	4822 253 30003
LA2	Neon lamp	4822 134 20016

Carbon resistor E12 series 0.25w<1 MΩ 5%
Plate ceramic capacitor
Polystyrene capacitor
Miniature electrolytic capacitor

...V = AM
[...V] = FM

-C-		
C2	22 nF - 63 V	4822 122 30103
C4	40 nF - 400 V	4822 121 40376
C6	40 nF - 400 V	4822 121 40376
C7	500 pF - 100 V - 10 %	4822 122 30034
C10	22 nF - 63 V	4822 122 30103
C11	15 pF - NPO 5 %	4822 122 31197
C12	22 nF - 63 V	4822 122 30103
C13	40 nF - 400 V	4822 121 40376
C15	1 nF - 100 V	4822 122 30027
C17	22 nF - 63 V	4822 122 30103
C18	40 nF - 400 V	4822 121 40376
C20	22 nF - 63 V	4822 122 30103
C22	22 nF - 63 V	4822 122 30103
C23	200 pF - 160 V - 2 1/2 %	4822 121 50262
C25	4,7 nF - 63 V	4822 122 31125
C28	22 nF - 63 V	4822 122 30103
C29	500 pF - 100 V	4822 122 30034
C30	22 nF - 63 V	4822 122 30103

-C-		
C31	2 nF - 100 V	4822 122 30114
C32	100 nF - 250 V - 10 %	4822 121 40036
C34	2 nF - 100 V	4822 122 30114
C35	2 nF - 100 V	4822 122 30114
C36	22 nF - 63 V	4822 122 30103
C37	10 nF - 630 V - 20 %	4822 121 41134
C39	2 nF - 100 V	4822 122 30114
C40	40 nF - 400 V	4822 121 40376
C43	4,7 nF - 63 V	4822 122 31125
C45	500 pF - 100 V - 10 %	4822 122 30034
C49	22 nF - 63 V	4822 122 30103
C50	22 nF - 63 V	4822 122 30103
C51	2 nF - 100 V	4822 122 30114
C52	22 nF - 63 V	4822 122 30103
VC1a-d, CT1-4	Variable cap.	4822 125 20189

| | | |

S	K H G E F D M C L 14b B 4 2 14a 1 A 3 18 17	S
C	49 52 46 35 26 27 30 23 45 32 44 43 41 18 47 39 36 15 13 11 14 8 7 10 4 51	C
C	50 48 33 34 25 31 28 29 22 19 21 42 24 16 40 20 17 37 38 12 6 3 9 2 1 5	C
R	24 42 26 40 37 38 18 35 33 32 43 30 15 28 29 14 6 5 2 3	R
R	23 31 25 41 20 19 17 39 22 21 36 34 11 12 16 13 27 9 10 8 7 4 1	R

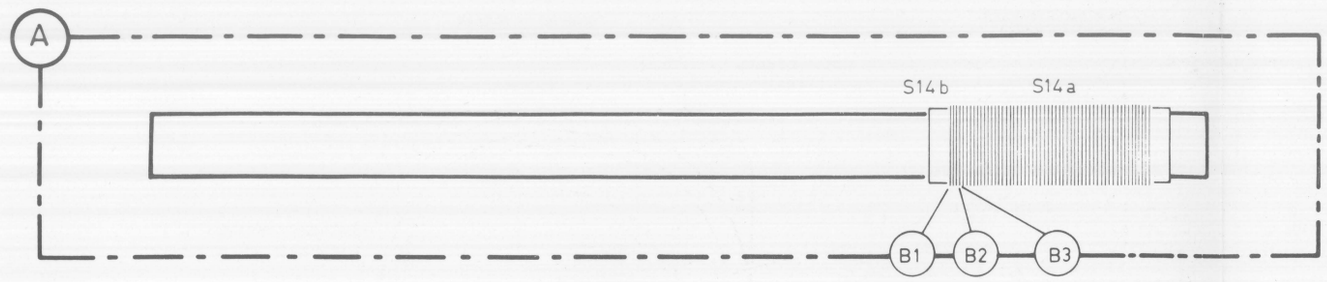

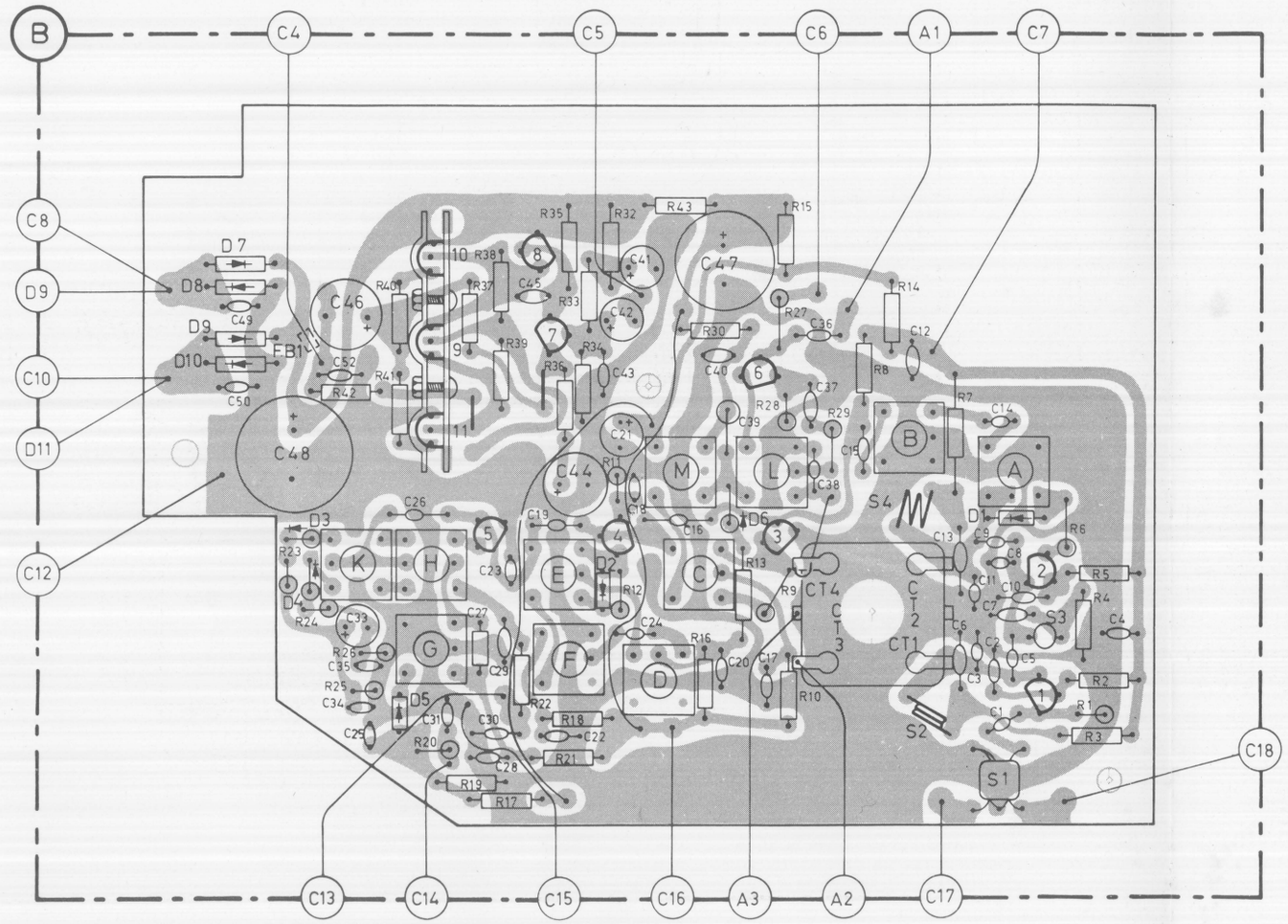

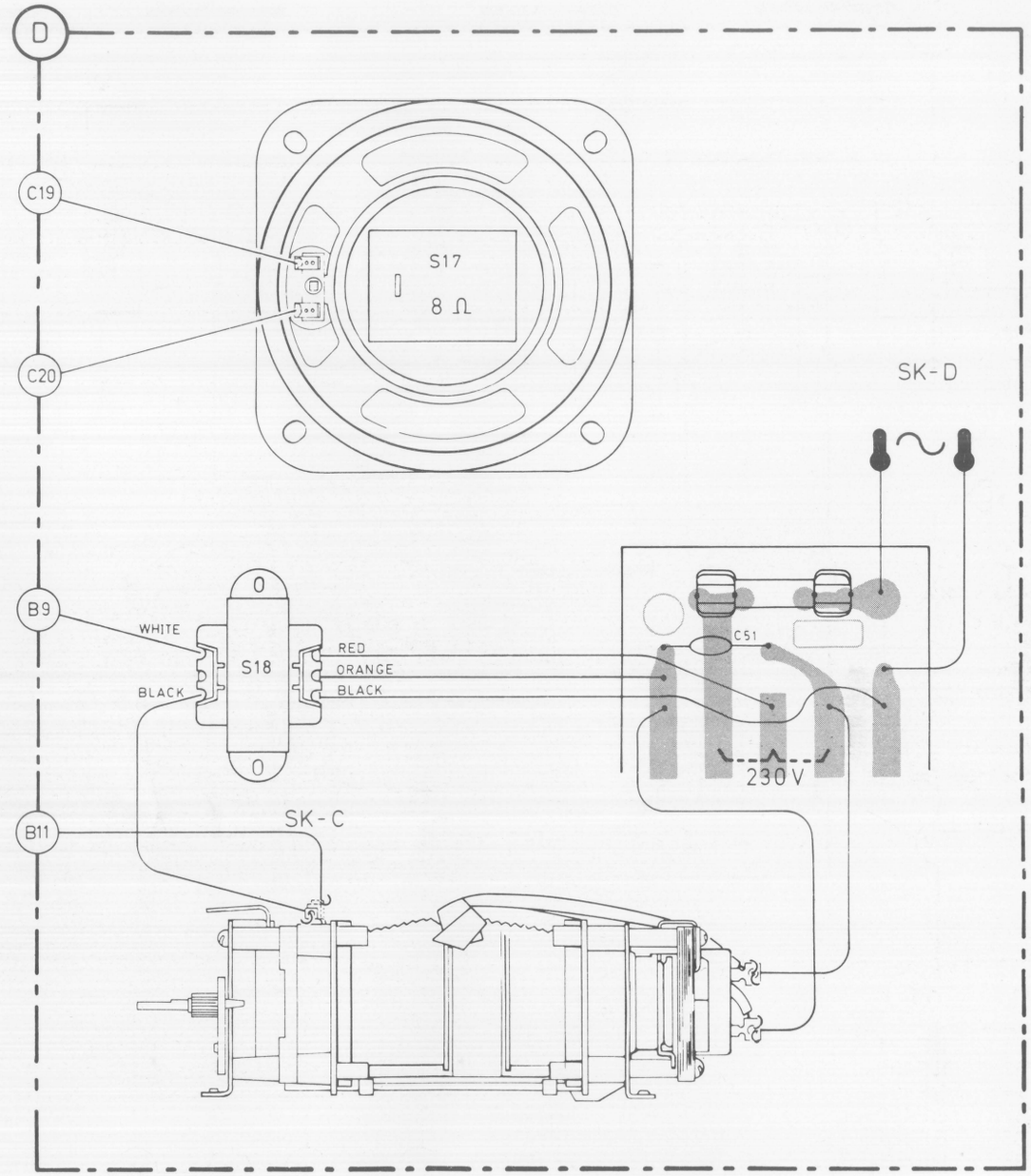

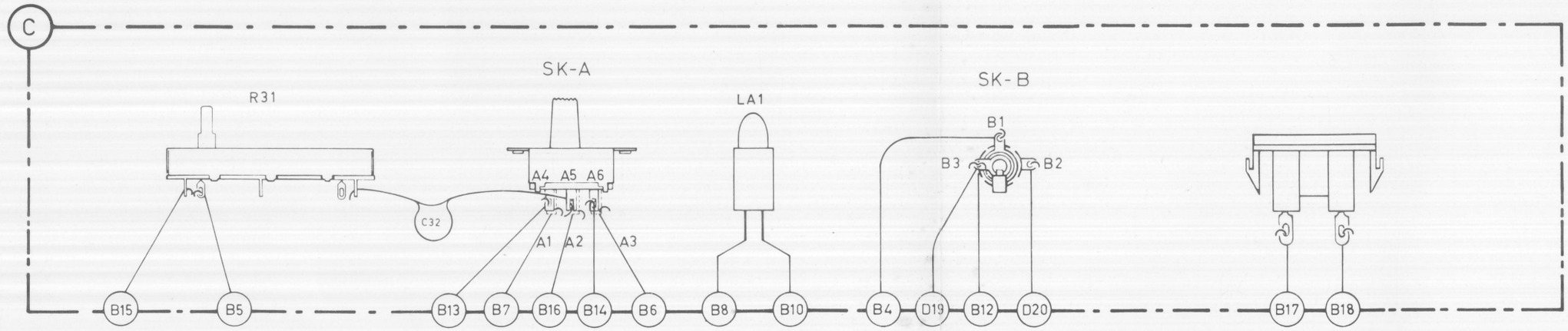

5544D

CS51639

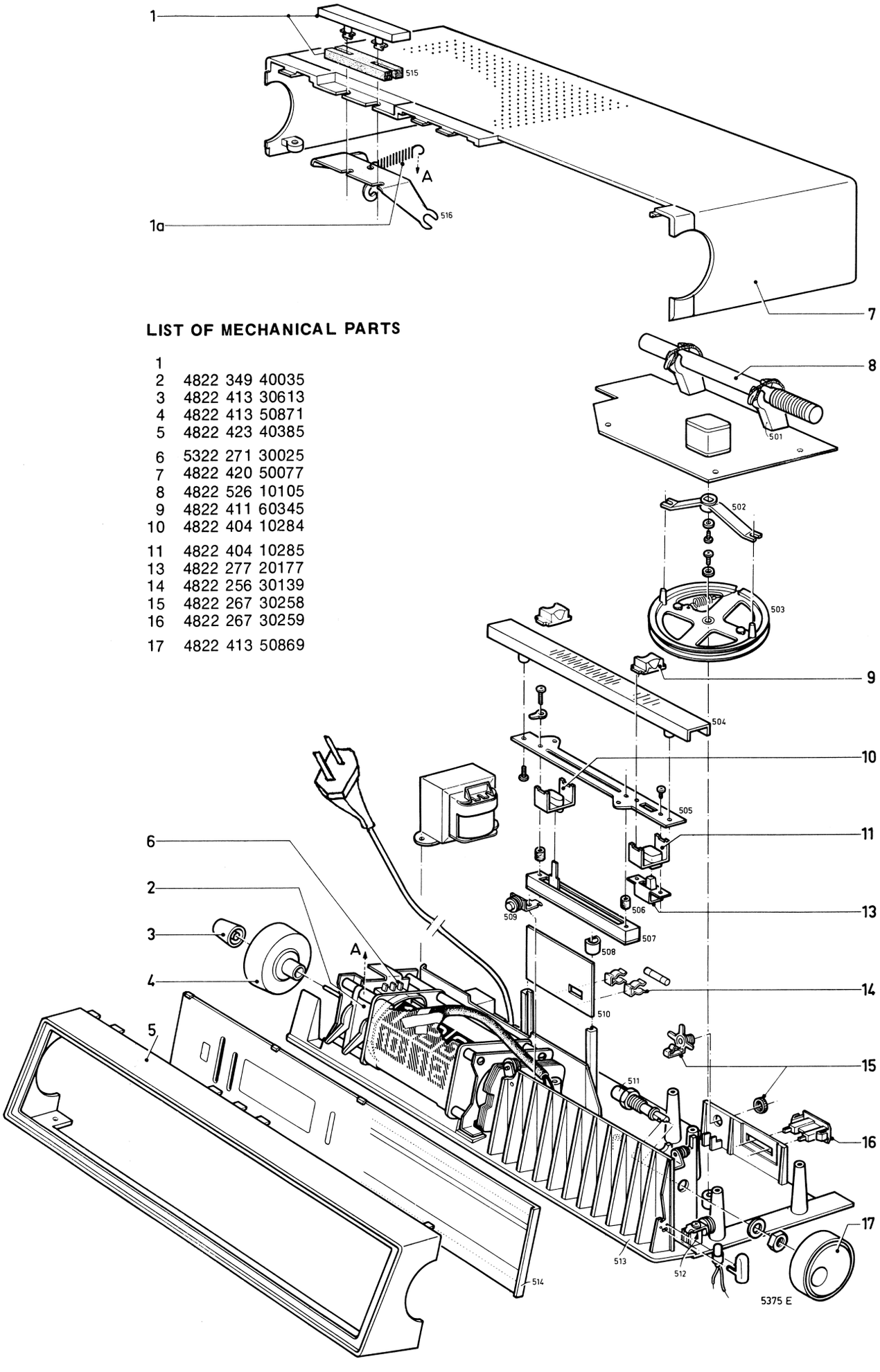

LIST OF MECHANICAL PARTS

1	
2	4822 349 40035
3	4822 413 30613
4	4822 413 50871
5	4822 423 40385
6	5322 271 30025
7	4822 420 50077
8	4822 526 10105
9	4822 411 60345
10	4822 404 10284
11	4822 404 10285
13	4822 277 20177
14	4822 256 30139
15	4822 267 30258
16	4822 267 30259
17	4822 413 50869

S	3 A 1 2 B 4 L C M D E F H G K	S
C	4 10 8 14 9 3 11 13 15 37 47 39 41 21 42 44 45 23 30 27 26 33 34 46 52 49	C
C	5 7 2 1 6 12 36 38 17 40 20 16 24 18 43 19 22 29 28 31 35 25 48 51 50	C
R	5 1 6 7 8 15 28 13 30 43 11 32 33 18 35 22 38 37 40 26 42 23	R
R	2 3 4 14 29 27 10 9 16 12 34 21 36 17 39 19 20 41 25 24	R

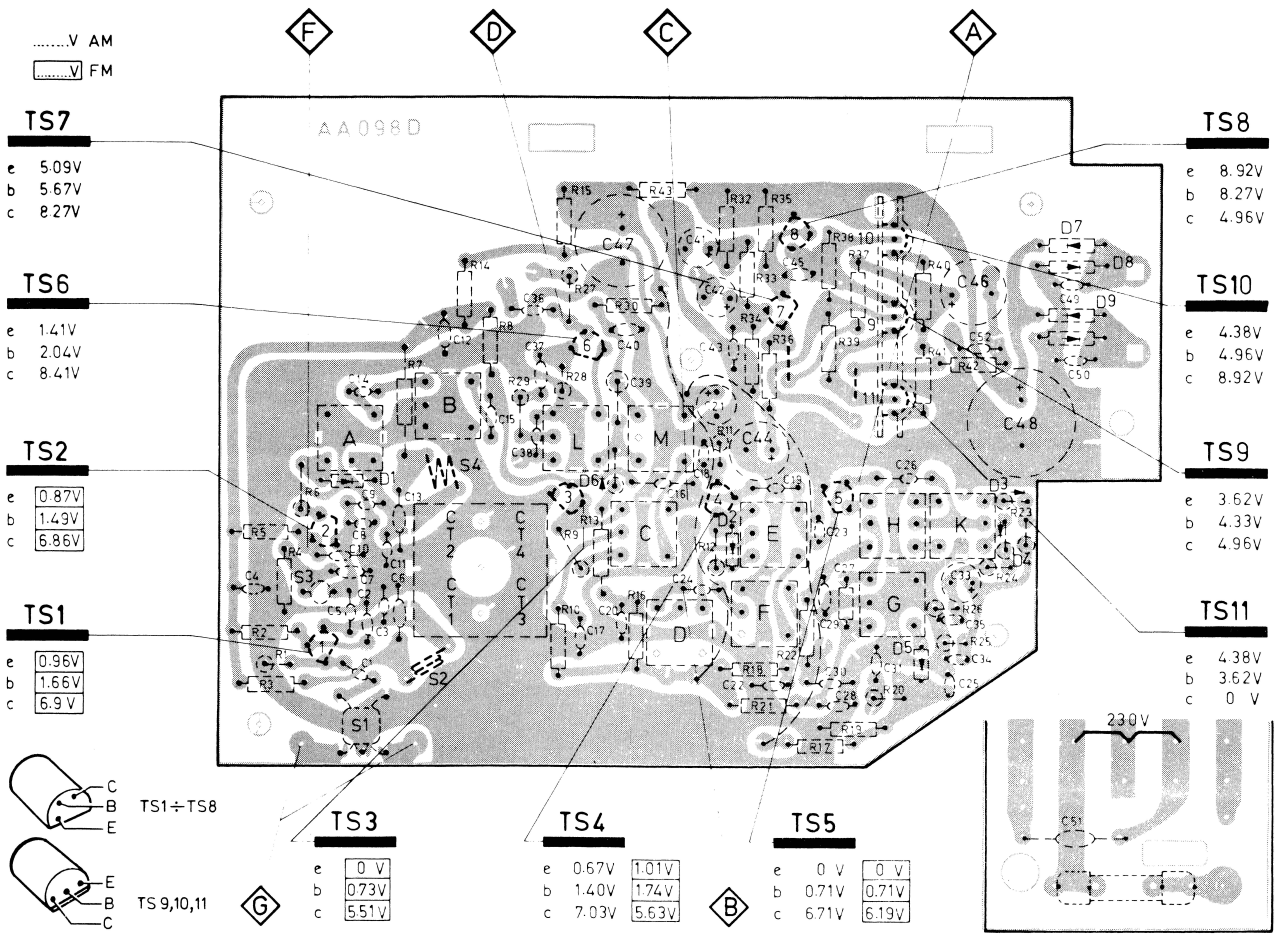

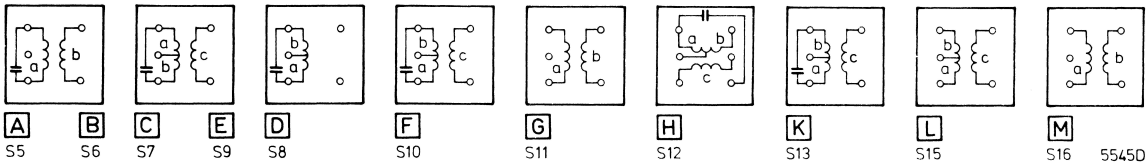

CLOCK MECHANISM

SK	Position	
①	Radio on	The clock and the radio section function
①	Radio off	The clock is running and the clock section has been or is being switched off.
②		The time elapsing between the moment that switch ① has been set to the off-position and the moment that the radio section has been switched off can be adjusted with switch ② (slumber switch).
①	Autom. Radio	The clock is running. The radio section is switched on when the clock time and the waking time agree. The radio section is switched off after an odd hour.

SK	Position	
①	Autom. Alarm	The clock is running. The radio section is switched on when the clock time and the waking time agree. About six minutes after the radio section has been switched on, the waking signal is switched on. This signal can be switched off with push-button ⑤ . The waking signal is repeated four times at intervals of 10 min.
③		Setting the waking time
④		Correcting the clock Remark: When the clock is being corrected, the set should be switched off.

Mounting instruction

Set the pulley and the varco bracket to the farthest right position (top view) before you mount the print.

SK...							
MW (520-1605 kHz)	452 kHz (/00S/ 10S/60S) 470 kHz (15S/ 65S) 460 kHz (22S/ 62S) via 33 nF	A B C D	min		G F D M	max.	1
	512 kHz	E	max		L		
	1635 kHz		min		CT4		
	580 kHz		tune in		S14a,b		
	1400 kHz				CT3		
FM (87,5-104 MHz)	10,7 MHz	C	max.	K E C B A	H E		
	via 5 nF	F			C B A		
	10,7 MHz via 5 nF a.m. 1 kHz				K	min.	
	86,5 MHz	G	max.		S4	max.	
	109 MHz		min.		CT2		
	90 MHz				S2		
	106 MHz				CT1		

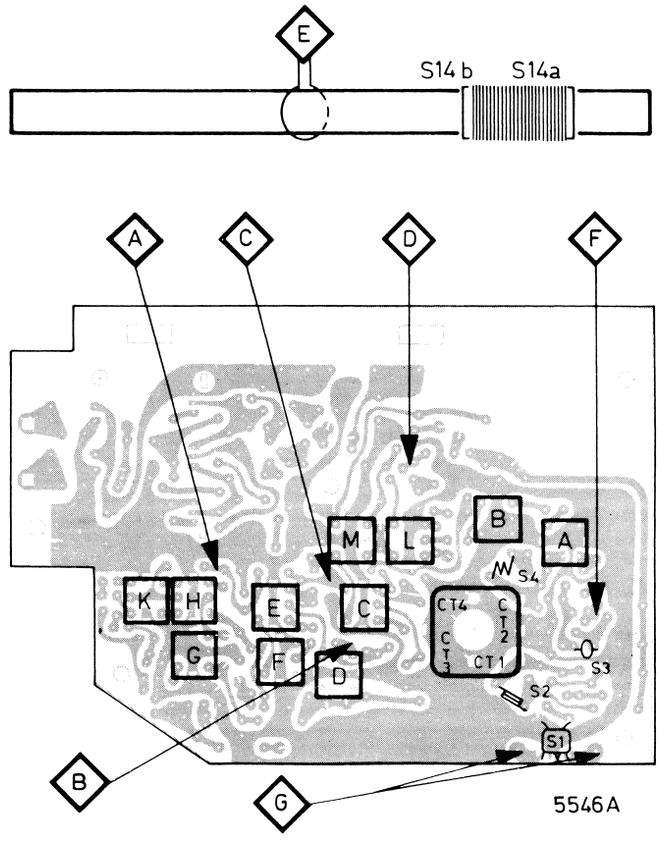

CS51641

| | | |

SK...							
MW (520-1605 kHz)	452 kHz (/00S/ 10S/60S) 470 kHz (15S/ 65S) 460 kHz (22S/ 62S) via 33 nF	A B C D	min		G F D M		
	512 kHz	E	max		L	max.	
	1635 kHz		min		CT4		
	580 kHz		tune in		S14a,b		
	1400 kHz				CT3		
FM (87,5-104 MHz)	10,7 MHz	C	max.	K E C B A	H E		1
	via 5 nF				C B A		
	10,7 MHz via 5 nF a.m. 1 kHz	F			K	min.	
	86,5 MHz	G	max.		S4	max.	
	109 MHz		min.		CT2		
	90 MHz				S2		
	106 MHz				CT1		

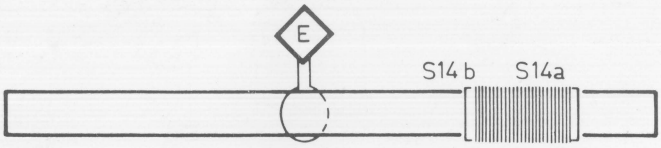

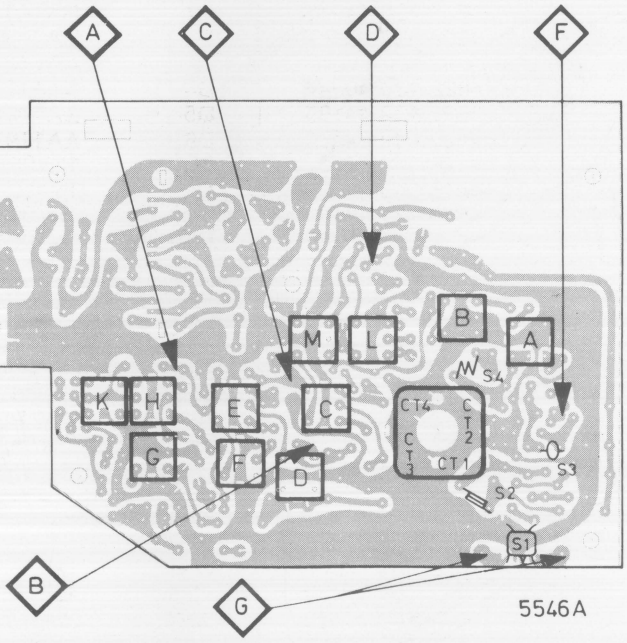

CS51641