SANYO

MODEL
8U-P30

All-transistor Radio

Service Manual

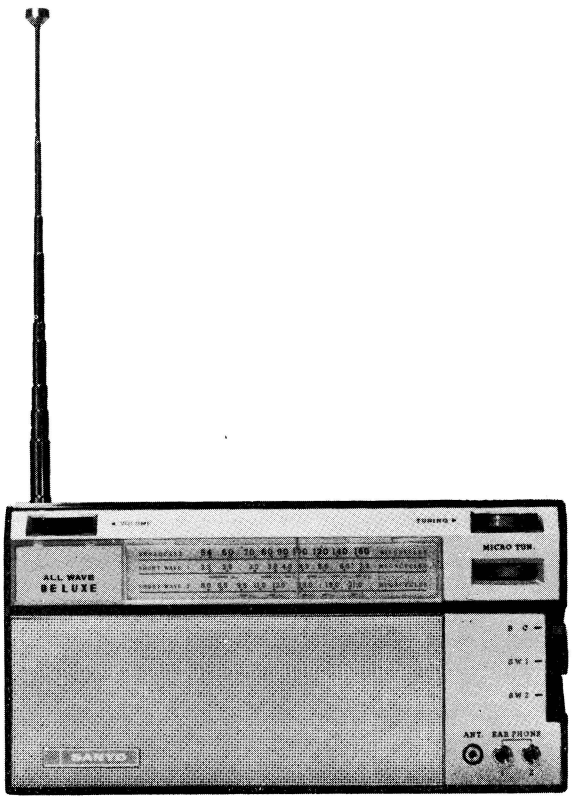

SPECIFICATIONS

FREQUENCY RANGE

Standard Broadcast		535 - 1,605 Kc
Shortwave	1	2.3 - 7.3 Mc
Shortwave	2	8 - 22 Mc

INTERMEDIATE FREQUENCY 455 Kc

TRANSISTOR COMPLEMENT

1 × 2SA222	Local Oscillator
1 × 2SA221	Mixer
1 × 2SA202	1st IF Amplifier
1 × 2SA203	2nd IF Amplifier
1 × 2SB185	1st AF Amplifier
1 × 2SB187	2nd AF Amplifier
2 × 2SB187	Power Amplifier

DIODE & THERMISTOR

1 × 1N-60	Diode, Detector & A V C
1 × SDT-20	Thermistor, Temperature Compensation

OUTPUT POWER

Undistorted	250 mW
Maximum	350 mW

RADIATION SENSITIVITY

Lower limit for 10 mW output

Standard Broadcast		350 μV/m
Shortwave	1	180 μV/m
Shortwave	2	30 μV

BATTERY USED

6 volts : 4 size C flashlight batteries

Current consumption : No signal 10 mA
Maximum 120 mA

LOUDSPEAKER

$3\frac{1}{2}''$ permanent dynamic type

Voice coil impedance : 7 ohms at 1,000 c/s

CABINET DIMENSIONS

Width	236 mm ($9\frac{1}{2}$ inches)
Height	124 mm (5 inches)
Depth	51 mm (2 inches)

NET WEIGHT

840 grams (30 ozs)

SANYO ELECTRIC CO., LTD.

MODEL 8U-P30 CIRCUIT DIAGRAM

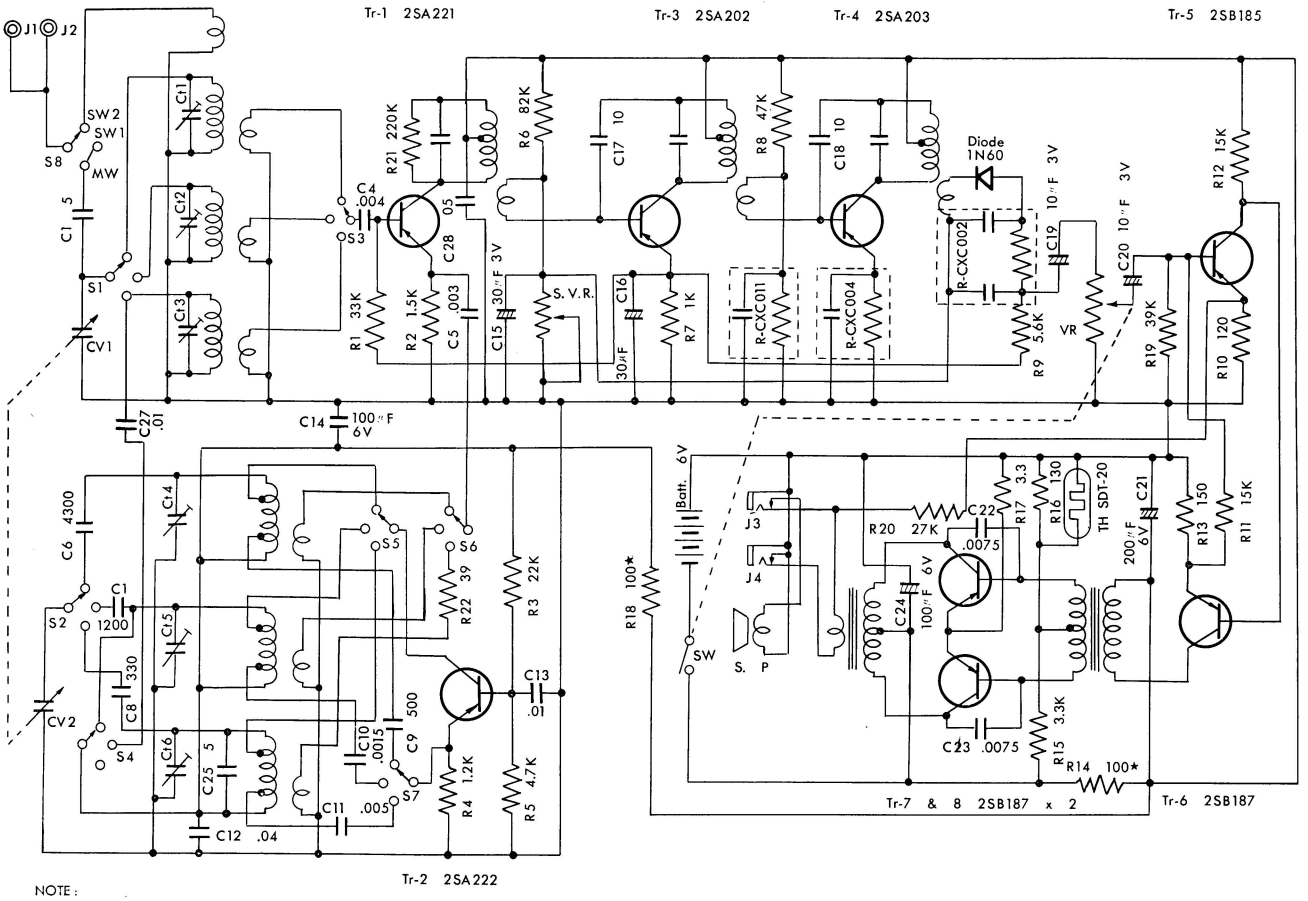

NOTE :

§ All resistance values in OHMS. K = 1,000 ★ = 20% allowance.
No mark = 10% allowance.

§ All capacitance values less than 1.0 in "μF" and 1.0 & above in "pF" except those indicated.

ALIGNMENT PROCEDURES

Apply volt-meter across the voice coil. Volume control should be at maximum position. Output of signal generator should be no higher than necessary to obtain output reading in order to avoid AVC function.

STEP	SIGNAL GENERATOR COUPLING	SIGNAL GENERATOR FREQUENCY	RADIO DIAL SETTING	ADJUST FOR MAXIMUM OUTPUT
IF ALIGNMENT				
1	Positive side thru 0.1μF capacitor to antenna side lug on variable capacitor. Negative side to chassis	455 Kc	540 Kc	T3 T2 T1
BROADCAST RF ALIGNMENT				
2	Fashion loop of several turns of wire and connect signal generator with it. Radiate signal from loop antenna	530 Kc	Left end (Max. capacity)	BC Osc. coil L6
3		1,650 Kc	Right end (Min. capacity)	BC Osc. trimmer Ct6
4		Repeat steps 2 and 3.		
5		600 Kc	600 Kc	BC Ant. coil L3
6		1,400 Kc	1,400 Kc	BC Ant. trimmer Ct3
7		Repeat steps 5 and 6.		

PART NO.	STOCK NO.	DESCRIPTION

TRANSISTORS

Tr 1	2SA221	Mixer
Tr 2	2SA222	Local Oscillator
Tr 3	2SA202	1st IF Amplifier
Tr 4	2SA203	2nd IF Amplifier
Tr 5	2SB185	1st AF Amplifier
Tr 6	2SB187	2nd AF Amplifier
Tr 7, 8	2SB187	Power Amplifier

DIODE & THERMISTOR

D I	IN-60	Detector & AVC
T H	SDT-20	Temperature Compensation

COILS

L 1	R-W2113	Antenna Coil (SW2)
L 2, 3	R-W2112a	Antenna Coil (SW1, BC)
L 4	R-W8055	Oscillator Coil (SW2)
L 5	R-W8054	Oscillator Coil (SW1)
L 6	R-W8014	Oscillator Coil (BC)

TRANSFORMERS

T 1	R-W5T008	1st IF Transformer
T 2	R-W5T009	2nd IF Transformer
T 3	R-W5T043	3rd IF Transformer
T 4	R-W6149	Input Transformer
T 5	R-W6150	Output Transformer

LOUDSPEAKER

S P	R-S6165	$3\frac{1}{2}''$ PM type, voice coil impedance 7 ohms

CONTROLS

S W	R-S4124	Band Selector
V R	R-R11620	Volume Control
S V R	R-R11006	Base, Bias (Tr 3) Adjustment
V C	R-C1029a	Variable Capacitor
Ct 1/6	R-C0013	2-block Trimmer
M V C	R-C1070	Variable Capacitor (Fine Tuner)

PART NO.	STOCK NO.	DESCRIPTION

CAPACITORS

C 1		5pF ±0.5pF 25V Ceramic
C 4		0.004μF +30-20% 25V Mylar
C 5		0.003μF +30-20% 25V Mylar
C 6		4300pF ±10% 125V Styrol
C 7		1200pF ±10% 25V Styrol
C 8		330pF ±10% 125V Styrol
C 9		500pF +30-20% 25V Mylar
C 10		0.0015μF +30-20% 25V Mylar
C 11		0.005μF +30-20% 25V Mylar
C 12		0.04μF +80-20% 25V Ceramic
C 13		0.01μF +30-20% 25V Mylar
C 14		100μF+200-10% 6V Electrolytic
C 15		30μF+200-10% 3V Electrolytic
C 16		30μF+200-10% 3V Electrolytic
C 17		10pF ±10% 25V Ceramic
C 18		10pF ±10% 25V Ceramic
C 19		10μF+200-10% 3V Electrolytic
C 20		10μE+200-10% 3V Electrolytic
C 21		200μF+200-10% 6V Electrolytic
C 22		0.0075μF +30-20% 25V Mylar
C 23		0.0075μF +30-20% 25V Mylar
C 24		100μF+200-10% 6V Electrolytic
C 25		5pF ±0.5pF 25V Ceramic
C 27		0.01μF +30-20% 25V Mylar
C 28		0.05μF +30-20% 50V Mylar

RESISTORS

R 1		33K ohms ±10% ½W Mold
R 2		1.5K ohms ±10% ½W Mold
R 3		22K ohms ±10% ½W Mold
R 4		1.2K ohms ±10% ½W Mold
R 5		4.7K ohms ±10% ½W Mold
R 6		82K ohms ±10% ½W Mold
R 7		1K ohms ±10% ½W Mold
R 8		47K ohms ±10% ½W Mold
R 9		5.6K ohms ±10% ½W Mold
R 10		120K ohms ±10% ½W Mold
R 11		15K ohms ±10% ½W Mold
R 12		15K ohms ±10% ½W Mold
R 13		150 ohms ±10% ½W Mold
R 14		100 ohms ±20% ½W Mold
R 15		3.9K ohms ±10% ½W Mold
R 16		130 ohms ±10% ½W Mold
R 17		3.3 ohms ±10% ½W Mold
R 18		100 ohms ±20% ½W Mold
R 19		39K ohms ±10% ½W Mold
R 20		27K ohms ±10% ½W Mold
R 21		220K ohms ±10% ½W Mold
R 22		39 ohms ±10% ½W Mold

PART NO.	STOCK NO.	DESCRIPTION

CAPACITOR & RESISTOR PACKED

	R-CXC-002	0.01μF × 2+200 ohms
	R-CXC-004	0.04μF + 1K ohms
	R-CXC-011	0.04μF + 5.6K ohms

CABINET

	R-31424	Cabinet
	R-31425	Back Cover
	R-32231	Dial Cover
	R-26462	Dial
	R-26463	Decoration Metal
	R-26464	Decoration Panel
	R-26466	Badge
	R-28035a	Band Selector Knob
	R-33298	Tuning Knob
	R-33299	Fine Tuning Knob
	R-S8352	Pointer
	R-39037	Volume Control Knob
	R-33226	Drum

MISCELLANEOUS

	R-S1125	Rod Antenna
	R-S8265	Antenna stick-on rubber cup
	R-S6066	Earphone with plug
	R-S2025La	Antenna Socket
	R-S2040L	Earphone Socket (two)
	R-48064	Leather Case

Printed in Japan

SHORTWAVE 1 RF ALIGNMENT

8	Fashion loop of several turns of wire and connect signal generator with it. Radiate signal from loop antenna	2.23 Mc	Left end (Max. capacity)	SW 1 Osc. coil L 5
9		7.5 Mc	Right end (Min. capacity)	SW 1 Osc. trimmer Ct 5
10		Repeat steps 8 and 9.		
11		2.5 Mc	2.5 Mc	SW 1 Ant. coil L 2
12		6.5 Mc	6.5 Mc	SW 1 Ant. trimmer Ct 2
13		Repeat steps 11 and 12.		

SHORTWAVE 2 RF ALIGNMENT

14	Positive side thru dummy antenna to antenna lug. Negative side to chassis	7.7 Mc	Left end (Max. capacity)	SW 2 Osc. coil L 4
15		22.7 Mc	Right end (Min. capacity)	SW 2 Osc. trimmer Ct 4
16		Repeat steps 14 and 15.		
17		8.5 Mc	8.5 Mc	SW 2 Ant. coil L 1
18		21.0 Mc	21.0 Mc	SW 2 Ant. trimmer Ct 1
19		Repeat steps 17 and 18.		

MAIN PARTS CONNECTION

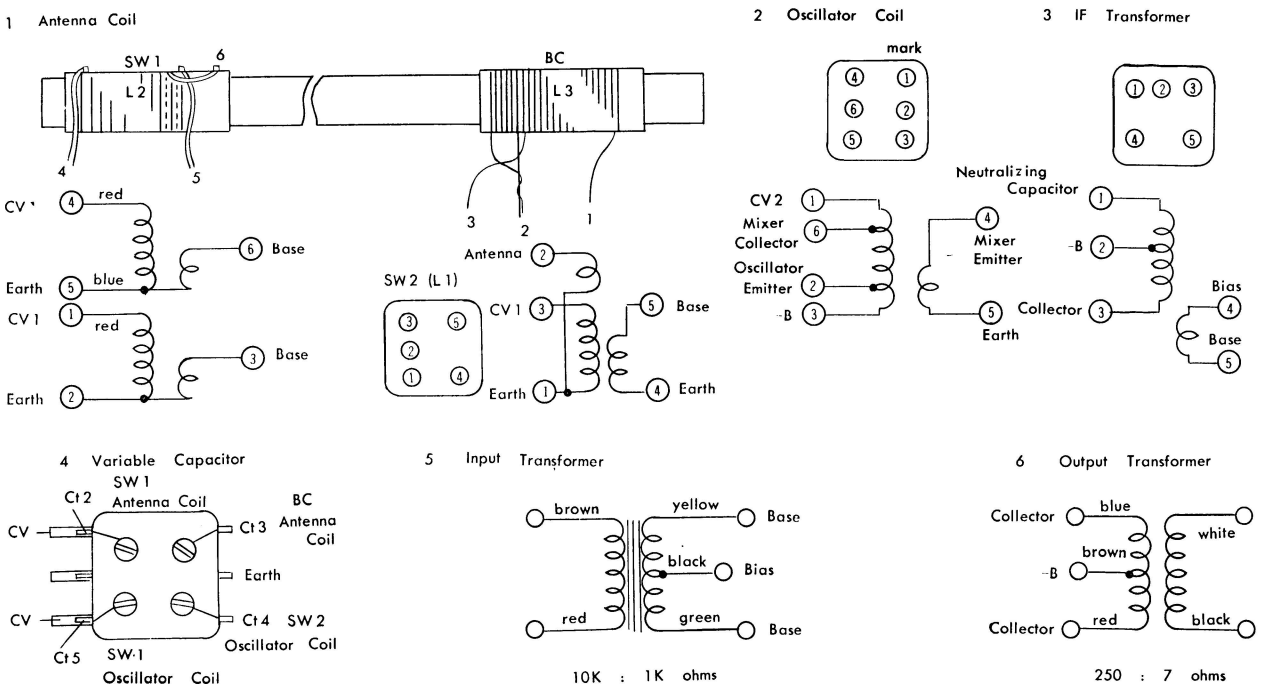

MAIN PARTS LOCATION

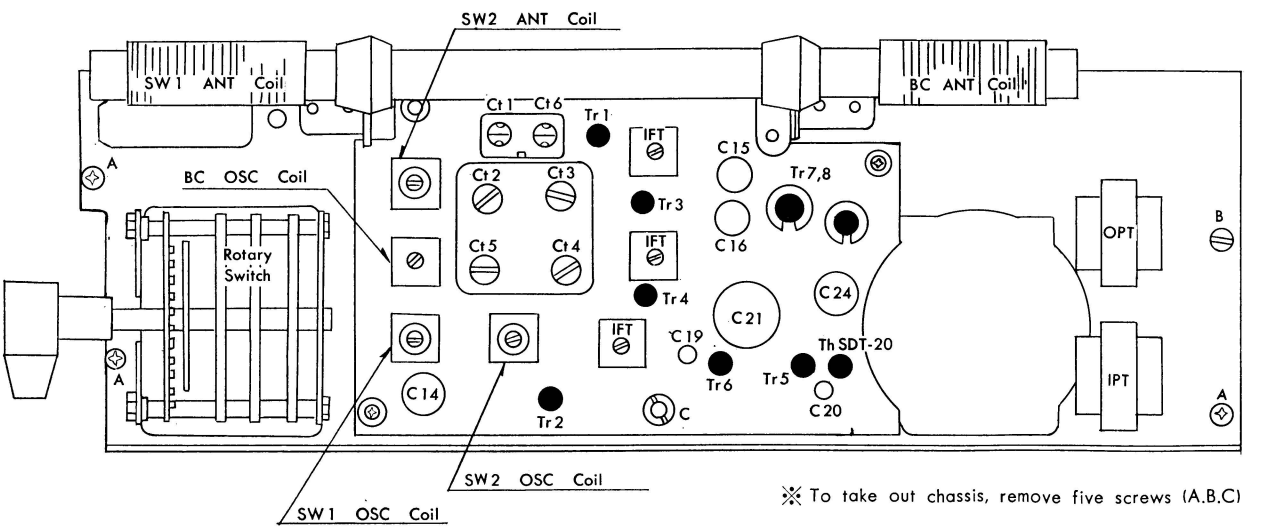

※ To take out chassis, remove five screws (A.B.C)

(R-26463)

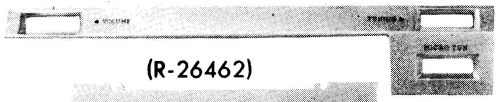

(R-26462)

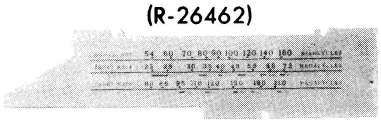

(R-32231)

(R-26464)

(R-26466)

(R-S 1125)

(R-S 8352)

(R-28035 a)

(R-39037)

(R-33298)

(R-33226)

(R-33299)

(R-31424)

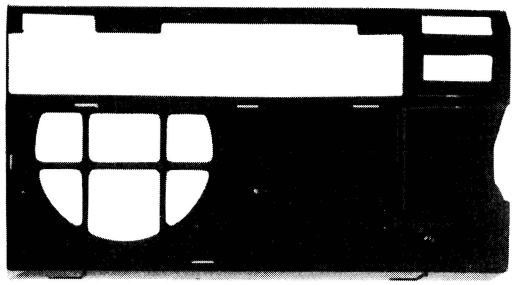
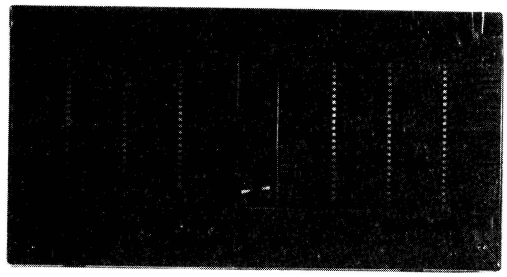
(R-31425)