SANYO

8-transistor, BC/SW_1/SW_2
Portable Radio

MODEL 8U-604A

SERVICE MANUAL

SANYO ELECTRIC CO., LTD.

INTERNATIONAL DIVISION : SANYO ELECTRIC TRADING CO., LTD.
OSAKA, JAPAN

SPECIFICATIONS

FREQUENCY RANGE	BC	530 – 1600 kc	
	SW1	2.3 – 7.3 mc	
	SW2	8 – 22 mc	
INTERMEDIATE FREQUENCY		455 kc	
TRANSISTORS	(1)	2SA222	Local oscillator
	(2)	2SA222	Frequency converter
	(3)	2SA322	1st IF amplifier
	(4)	2SA203	2nd IF amplifier
	(5)	2SB185	1st AF amplifier
	(6)	2SB185	2nd AF amplifier
	(7)	2SB22 × 2	Power amplifier
DIODE	(1)	1N60 (or 1S188)	Detector & AGC

OUTPUT POWER	Undistorted	300 mW
	Maximum	500 mW
SENSITIVITY	BC	45 μV/m for 50 mW output
	SW1	40 μV/m for 50 mW output
	SW2	55 μV/m for 50 mW output
CURRENT DRAIN	No signal	15 mA
	Maximum	125 mA
POWER SUPPLY	4 × "D" size battery	
LOUDSPEAKER	3½" (8.5 cm) permanent dynamic speaker	
	Voice coil impedance ··· 8 ohms	
DIMENSIONS	9½" wide × 6" high × 2¾" deep	
	(24 cm × 15 cm × 7 cm)	
NET WEIGHT	2.3 lbs (1 kg) Excl. batteries	

ALIGNMENT PROCEDURES

ADJUSTMENT OF SEMI-FIXED RESISTOR

Set the value of Semi-Fixed Resistor at maximum and make a receiver tune in no signal (Station). Apply 6.0 volts to it as power source. Connect an ammeter (range 1 mA) between two points. Adjust the value of Semi-Fixed Resistor in order to obtain such a meter reading as 300μA (tolerance = 10%).

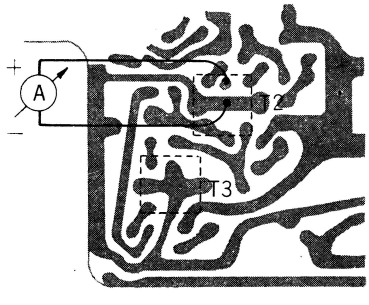

Apply volt-meter across the voice coil. Volume control should be at maximum position. Output of signal generator should be no higher than necessary to obtain output reading.

STEPS	SIGNAL GENERATOR COUPLING	SIGNAL GENERATOR OUTPUT	RADIO DIAL SETTING	ADJUST FOR MAXIMUM OUTPUT
IF ALIGNMENT (Band select in BC position)				
1	Radiate signal through the loop antenna which connected with signal generator output cable.	455 Kc	455 Kc	IF transformer T3 T2 T1
2		Repeat step 1.		

BC ALIGNMENT

3	Radiate signal through the loop antenna which connected with signal generator output cable.	515 Kc	515 Kc	BC osc. coil. L7
4		1650 Kc	1650 Kc	BC osc. trim. Ct4
5		Repeat steps 3 and 4.		
6		570 Kc	570 Kc	BC ant. coil L1
7		1420 Kc	1420 Kc	BC ant. trim. Ct1
8		Repeat steps 6 and 7.		

SW1 ALIGNMENT

9	Radiate signal through the loop antenna which connected with signal generator output cable.	2.21 mc	2.21 mc	SW1 osc. coil L8
10		7.5 mc	7.5 mc	SW2osc.trim.Ct5
11		Repeat steps 9 and 10.		
12		2.5 mc	2.5 mc	SW1 ant. coil L4
13		6.5 mc	6.5 mc	SW1 ant.trim.Ct2
14		Repeat steps 12 and 13.		

SW2 ALIGNMENT

15	Rediate signal through the loop antenna which connected with signal generator output cable.	7.75 mc	7.75 mc	SW2 osc. coil L9
16		22.6 mc	22.6 mc	SW2osc.trim.Ct6
17		Repeat steps 15 and 16.		
18		8.5 mc	8.5 mc	SW2 ant. coil L3
19		21 mc	21 mc	SW2ant.trim.Ct3
20		Repeat steps 18 and 19.		

PARTS LIST

TRANSISTORS

SYMBOL NO.	STOCK NO.	DESCRIPTION
Tr1	2SA222	Oscillator
Tr2	2SA222	Mixer
Tr3	2SA322	1st IF amplifier
Tr4	2SA203	2nd IF amplifier
Tr5	2SB185	1st AF amplifier
Tr6	2SB185	2nd AF amplifier
Tr7	2SB22	Power amplifier (Push–pull)
Tr8	2SB22	Power amplifier (Push–pull)

DIODE

D	1N6O or 1S188	Detector and AGC

COILS

L1–L6	R–S8972	Antenna coil complete
L7	R–W8065	Oscillator coil — for BC
L8	R–W8137	Oscillator coil — for SW1
L9	R–W8055a	Oscillator coil — for SW2

TRANSFORMERS

T1	R–W5T038	1st IF transformer
T2	R–W5T009	2nd IF transformer
T3	R–W5T062	3rd IF transformer
T4	R–W6255	Input transformer

CONTROLS

VR1	R–R124125	Volume control—with On/Off switch, 10K ohm
VC1,2	R–C1025	Variable capacitor — Tuning gang
VR2	R–R11011	Semi-fixed resistor — 100K ohms
Ct3,6	R–C0030	2–block trimmer
Ct1,2,4,5	R–C0034	4–block trimmer
	R–S4281	Band select switch

LOUDSPEAKER

	R–S6334 or R–S6335	9 cm (3⅝″) speaker, 8 ohms,

RESISTORS

R1	68	ohms	±10%	¼W	Carbon film
R2	12K	〃	〃	〃	〃
R3	1.2K	〃	〃	〃	〃
R4	15K	〃	〃	〃	〃
R5	4.7K	〃	〃	〃	〃
R6	15K	〃	〃	〃	〃
R7	5.6K	〃	〃	〃	〃
R8	3.3K	〃	〃	〃	〃
R9	1K	〃	±20%	〃	〃
R10	3.9K	〃	±10%	〃	〃
R14	5.6K	〃	〃	〃	〃
R15	220K	〃	〃	〃	〃
R16	15K	〃	〃	〃	〃
R17	4.7K	〃	〃	〃	〃
R18	3.9K	〃	〃	〃	〃
R19	10K	〃	〃	〃	〃
R20	390	〃	〃	〃	〃
R21	100	〃	〃	〃	〃
R22	2.7K	〃	〃	〃	〃
R23	2.2	〃	〃	〃	〃
R24	180	〃	〃	〃	〃
R25	2.7K	〃	〃	〃	〃
R26	180	〃	〃	〃	〃
R27	2.2	〃	〃	〃	〃
R28	10K	〃	〃	〃	〃
R29	10	〃	〃	〃	〃
R30	39K	〃	〃	〃	〃

PACKED CAPACITORS AND RESISTORS

SYMBOL NO.	STOCK NO.	DESCRIPTION
C20,R11	R–CXC004	(0.04μF+80% −20% 25V) + (1K ohm ±10% 1/10W)
C20,R12	R–CXC026	(0.04μF+80% −20% 25V) + (820 ohms ±10% 1/10W)
C24,C25	R–CXC002	(Two 0.01μF+80% −20% 25V) +
R13		(200 ohms ±20% 1/10W)

C1*		7	pF	±10%	25V	Ceramic
C2*		8	〃	±10%	〃	〃
C3		4300	〃	〃	〃	Styrol
C4*		0.04	μF	+80% −20%	〃	Ceramic
C5*		500	pF	±20%	〃	〃
C6		0.01	μF	+30% −20%	50V	Mylar
C7		0.01	〃	〃 〃	〃	〃
C8*		0.04	〃	+80% 〃	25V	Ceramic
C9		0.003	〃	+30% 〃	50V	Mylar
CT0		0.01	〃	〃 〃	〃	〃
C11		0.001	〃	〃 〃	〃	〃
C12		1200	pF	±10%	25V	Styrol
C13		0.002	μF	+30% −20%	50V	Mylar
C14		310	pF	±10%	25V	Styrol
C15*		7	〃	〃	〃	Ceramic
C16	R–C9105	30	μF		6V	Electrolytic
C17	R–C9142	〃	〃		3V	〃
C19*		3	pF	±0.5 pF	25V	Ceramic
C21		0.05	μF	+80% −20%	12V	Barrier
C23*		12	pF	±10%	25V	Ceramic
C26	R–C9076	1	μF		10V	Electrolytic
C27	R–C9078	5	〃		6V	〃
C28	R–C9077a	200	〃		〃	〃
C29		0.0015	〃	+30% −20%	50V	Mylar
C30	R–C9105	30	〃		6V	Electrolytic
C31*		500	pF	±30%	25V	Ceramic
C32	R–C9080	30	μF		3V	Electrolytic
C33	R–C9141	200	〃		12V	〃
C34	R–C9077a	〃	〃		6V	〃
C35,C36		0.02	〃	+30% −20%	50V	Mylar
C37*		7	pF	±10%	25V	Ceramic
C38*		5	〃	±0.5 pF	25V	〃

Capacitor marked * may be replaced with square type one.

CABINET

	R–424013	Cabinet
	R–31631	Front panel — plastic
	R–39184a	Dial frame — metal coated
	R–261166	Dial scale plate
	R–32456	Dial plate
	R–32455	Band select identifier
	R–26159	Tuning plate
	R–47920	Specification sheet
	R–S8974	Handle assembly
	R–24896	Handle fixing metal
	R–24897	Special washer — handle
	R–261139	Special washer — handle
	R–25145	Fixing metal — speaker
	R–24043	Stud nut
	R–S81057	Volume control knob
	R–S81076	Tuning knob
	R–S8964	Tuning shaft complete
	R–261157b	Punched grille metal
	R–261158	Metal strip
	R–26882	Badge — SANYO
	R–32505	Jack mtg. base
	R–S8963	Pointer assembly
	R–112225a	Fixing metal — printed circuit board
	R–261020a	Dial back plate
	R–32324	Drum
	R–15041	Dial cord tension spring
	R–24635	Pulley
	R–24793a	Pulley shaft
	R–S62T0a	Earphone
	R–S1235a	Telescopic rod antenna
	R–S2040	Earphone jack
	R–S2025b	Antenna jack
	R–S8764	Battery terminal (+)
	R–S81058	Battery holder ··· (−) only R–112387
	R–S81059	Battery holder ··· (+) & (−) R–112386

Printed in Japan.

ANTENNA COIL TERMINAL IDENTIFICATION

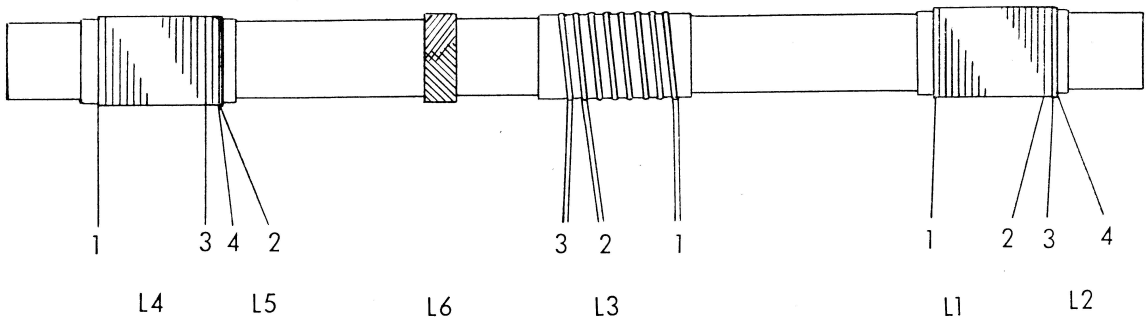

COILS	LEADS	COLOR
L1, L2	1	RED
	2	BLACK
	3	GREEN
	4	WHITE
L3	1	RED
	2	GREEN
	3	BLACK
L4, L5	1	RED
	2	BLACK
	3	GREEN
	4	WHITE
L6	NONE	

CHASSIS WIRING AND COMPONENTS VIEW

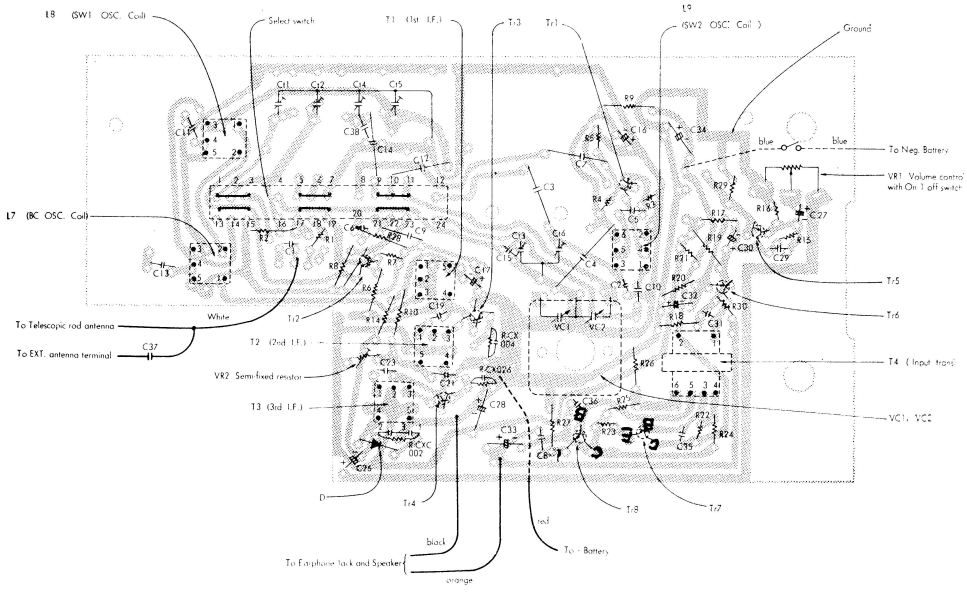

CHASSIS ASSEMBLY VIEW

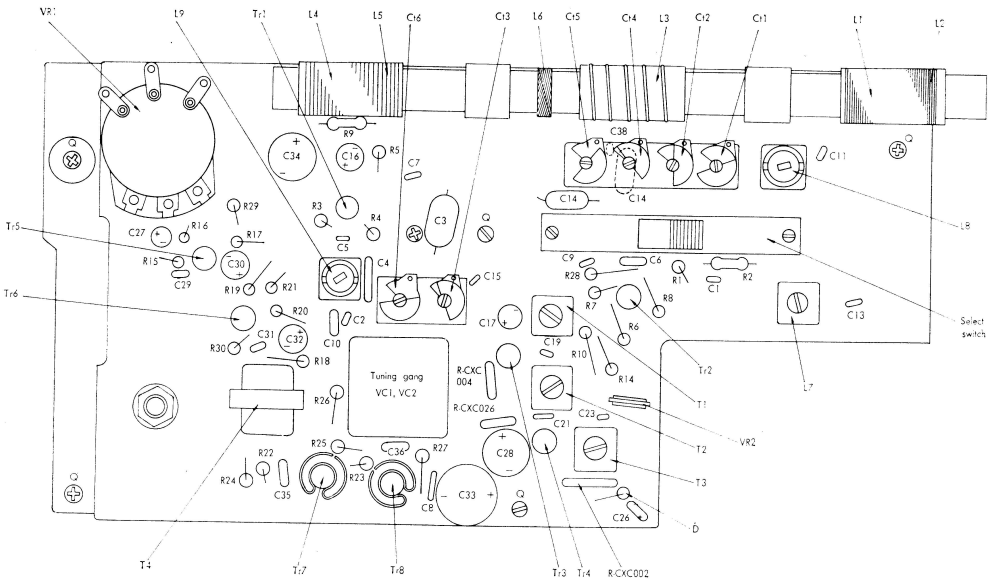
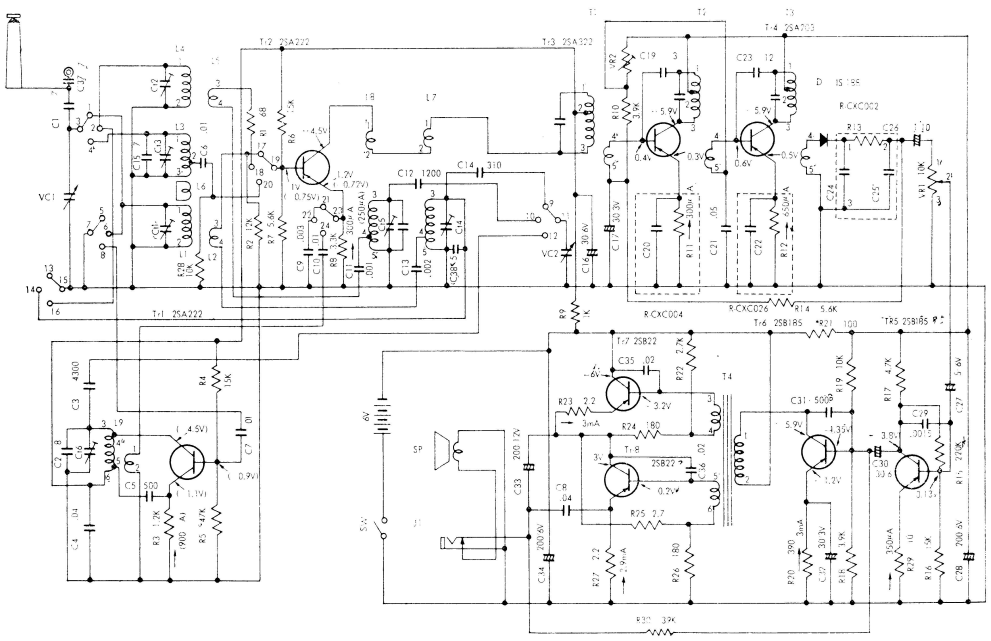
CIRCUIT DIAGRAM