SANYO

Sanyo Sounds Exciting!

8-transistor Portable Radio

MODEL 8SA-723

SERVICE MANUAL

SANYO ELECTRIC CO., LTD.

INTERNATIONAL DIVISION : SANYO ELECTRIC TRADING CO., LTD.
OSAKA, JAPAN

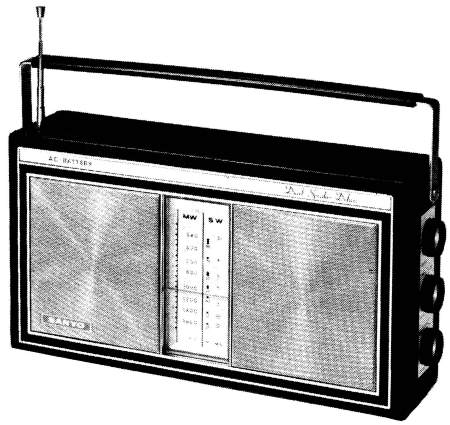

SPECIFICATIONS

Frequency range ····· BC 530–1,605 Kc
SW 3.2–12 Mc

Intermediate frequency ····· 455 Kc

Transistor ····· 2SA222 ×1 ····· Frequency converter
2SA202 ×1 ····· 1st IF amplifier
2SA203 ×1 ····· 2nd IF amplifier
2SB185 ×2 ····· Audio amplifier
2SB185 ×1 ····· Audio driver
2SB22 ×2 ····· Power amplifier

Diode ····· 1S188 ×1 ····· Detector & AGC

Thermistor ····· SDT–09 ×1 ····· Temperature compensator

Output power ····· Undistorted 1000 mW
Maximum 630 mW

Current drain ····· No signal 15 mA
Maximum 235 mA

Loudspeaker ····· 4″ permanent dynamic ×2
Voice coil impedance 8 ohms

Power supply ····· DC 6 volts (four "D"-size flashlite batteries) and AC 110 volts or 220 volts

Dimensions ····· 11⅜″ wide × 6⅛″ high × 2¾″ deep

Weight ····· 4 lbs.

ALIGNMENT PROCEDURES

(1) Alignment of Semi-fixed resistor
Apply 6 volts to the receiver as power source and make a receiver tune in no signal (Station).
Connect a Volt-meter (range; 1V) between two points A and B as figure.
Adjust the value of Semi-fixed resistor in order to obtain 0.3 volt deflection.

(2) IF and RF alignment
Apply volt-meter across the voice coil.
Volume control should be at maximum position. Output of signal generator should be no higher than necessary to obtain proper output reading in order to avoid AGC function.

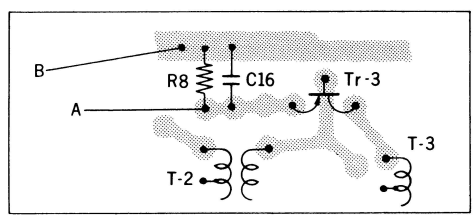

STEP	SIGNAL GENERATOR COUPLING	SIGNAL GENERATOR FREQUENCY	RADIO DIAL SETTING	ADJUST FOR MAXIMUM OUTPUT
✳ *IF ALIGNMENT*				
1	Radiate signal through the loop antenna, which connected with signal generator output cable.	455 Kc	Lower end	T-3 T-2 T-1
✳ *BROADCAST RF ALIGNMENT*				
2	Radiate signal through the loop antenna, which connected with signal generator output cable.	530 Kc	Lower end	L-4
3		1,605 Kc	Upper end	BC osc, trim. Ct-4
4		Repeat steps 2 and 3		
5		600 Kc	600 Kc	L-2
6		1,400 Kc	1,400 Kc	BC ant. trim. Ct-2
7		Repeat steps 5 and 6		
✳ *SHORT WAVE RF ALIGNMENT*				
8	Radiate signal through the loop antenna, which connected with signal generator output cable.	3.2 Mc	Lower end	L-3
9		12 Mc	Upper end	SW osc. trim. Ct-3
10		Repeat steps 8 and 9		
11		3.4 Mc	3.4 Mc	L-1
12		11.O Mc	11.O Mc	SW ant. trim. Ct-1
13		Repeat steps 11 and 12		

PART NO.	DESCRIPTION		Q'TY
	HOUSING		
R-A8723A	Housing Assembly Complete		1
R-A485048	Main Housing Assembly		1
-R-485048b	Main Housing		1
-R-325295	Plastic Mount	- control knob section	1
-R-265692	Marking Metal	- control knob identify	1
-R-325379a	Plastic Mount	- jack section	1
-R-115609	Metal Mount	- AC cord mtg	1
R-A315211	Front Plastic Assembly		1
-R-315211	Front Plastic		1
-R-265830	Metal Strip	- AC/BATTERY	1
-R-325294	Dial Scale		1
-R-265690	Grille Metal	- left speaker grille	1
-R-265153	Badge	- ":SANYO"	1
-R-265691	Grille Metal	- right speaker grille	1
-R-426961	Spacer	- under grille metal	2
R-S85254	Handle		1
R-395205	Plastic Mount	- Handle mtg	2
R-245322	Special Screw	- Handle mtg	2
R-355144	Washer	- Handle mtg	4
R-A325299	Tuning Knob Assembly		1
-R-325229	Tuning Knob	- plastic body only	1
-R-265693	Metal Decoration		1
R-A325300	Knob Assembly	- volume & band select	2
-R-325300	Knob	- plastic body only	2
-R-265693	Metal Decoration		2
R-355156	Knob Washer		3
R-35171	Battery Holder Tube		1
R-S85166	Battery Terminal	- negative	1
R-475688a	Cover	- for chassis	1
R-325070	Ring	- antenna coil mtg	1
R-245160	Stud Nut	- chassis mtg	3
	CHASSIS		
R-S85161	Tuning Shaft		1
R-445082	Cushion	- variable capacitor mtg	1
R-33226	Drum		1
R-15041	Tension Spring		2
R-S85237	Pointor		1
R-265694	Back Plate	- behind dial scale	1
R-115531	Lever	- switch actuator	1
R-115530	Metal Mount	- lever mtg	1
R-275015	Special Screw	- lever mtg	2
R-245323	Shaft	- pulley	1
R-275024	Pulley Shaft		4
R-325017	Pulley (plastic)		2
R-245240	Pulley (metal)	-	2
R-24497	Pulley (metal)	-	2
R-13027a	E-irng Washer	- pulley & lever	4
R-115297a	Battery Terminal	- positive	1
R-44031	Cushion	- on Battery Terminal	1
R-245096	Pipe	- P.C. Board mtg	2

SCHEMATIC LOCATION	PART NO.	DESCRIPTION	
	COILS & TRANSFORMERS		
L1 L2	R-W2630	Antenna Coil	
L3	R-W8548	Oscillator Coil SW	
L4	R-W8549	Oscillator Coil MW	
T1	R-W5T008	IF Transformer	
T2	R-W5T009	IF Transformer	
T3	R-W5T043	IF Transformer	
T4	R-W6181	Input Transformer	
T5	R-W6560	Output Transformer	
T6	R-W7135	Power Transformer	
	CONTROLS		
	R-C1523	Variable Capacitor	- tuning capacitor
	R-R116555	Variable Resistor	- volume control
	R-S4586	Mechanical Switch	
	R-S4583	Slide Switch	- band select
	R-S81332	Spring Switch	- AC/DC select
	R-S4266	Slide Switch	
	R-R11011	Semi-fixed Resistor	

SCHEMATIC LOCATION	PART NO.	DESCRIPTION		
	SEMICONDUCTORS			
Tr1	2SA222	Transistor		
Tr2	2SA202AA	Transistor No. 6 or 7		
Tr3	2SA203AA	Transistor		
Tr4	2SB185	Transistor black coloring		
Tr5 Tr6	2SB185AA	Transistor		
Tr7 Tr8	2SB22	Transistor (blue, yellow, and no color)		
D1	1S188	Diode (red)		
	SDT-09	Thermistor		
D2 D3	R-S1559	Silicon Rectifier SD-1 (Y)		
	MISCELLANEOUS			
	R-S6601	Speaker 4" 8 ohms		
	R-S6560	Earphone		
	R-S1549	Telescopic Antenna		
	R-23596	Lug Terminal		
	R-S2040	Jack	- earphone	
	R-S2025b	Jack	- antenna	
	R-S3146	AC Cord		
	R-S8574b	Plug Adaptor	Siemens type	
	R-S8575b	Plug Adaptor	England type	
	ELECTROLYTIC CAPACITORS			
C11	R-C9525	50μF		9V
C12 C22 C23	R-C9080	30μF		3V
C19 C21	R-C9078	5μF		6V
C24 C32	R-C9077	200μF		6V
C27	R-C9557	200μF		10V
C28	R-C9115	1μF		10V
C31	R-C9092	500μF		15V
	FIXED VALUE CAPACITORS			
C2	R-CKD050K	Ceramic	5pF	±10%
C3	R-CQS332M	Mylar	0.0033μF	±20%
C4	R-CQS222M	Mylar	0.0022μF	±20%
C5	R-CQS203M	Mylar	0.02μF	±20%
C6	R-CQS472M	Mylar	0.0047μF	±20%
C7	R-CQT182J	Styrol	1800pF	± 5%
C8	R-CQT361J	Styrol	360pF	± 5%
C9	R-CKD130K	Ceramic	13pF	±10%
C10	R-CKD403Z	Ceramic	0.04μF	±80%
C13	R-CKD130K	Ceramic	13pF	±10%
	R-CKD160K	Ceramic	16pF	±10%
C14 C16	R-CQS403M	Mylar	0.04μF	±20%
C15	R-CKD100K	Ceramic	10pF	±10%
C17 C18	R-CQS103M	Mylar	0.01μF	±20%
C25 C26	R-CQS153M	Mylar	0.015μF	±20%
	FIXED VALUE RESISTORS			
R1	R-R100K	10 ohms	10%	¼W
R2 R16 R25	R-R223K	22K ohms	10%	¼W
R3 R12	R-R822K	8.2K ohms	10%	¼W
R4	R-R182K	1.8K ohms	10%	¼W
R5	R-R221K	220 ohms	10%	¼W
R6	R-R271K	270 ohms	10%	¼W
R7 R20	R-R152K	1.5K ohms	10%	¼W
R8	R-R471K	470 ohms	10%	¼W
R9	R-R472K	4.7K ohms	10%	¼W
R10 R13	R-R561K	560 ohms	10%	¼W
R11	R-R683K	68K ohms	10%	¼W
R14	R-R222K	2.2K ohms	10%	¼W
R15 R19	R-R181K	180 ohms	10%	¼W
R17	R-R682K	6.8K ohms	10%	¼W
R18	R-R391K	390 ohms	10%	¼W
R21	R-R101K	100 ohms	10%	¼W
R22	R-R2N2K	2.2 ohms	10%	¼W
	R-R010K	1 ohm	10%	¼W
R23	R-R154K	150K ohms	10%	¼W
R24	R-R473K	47K ohms	10%	¼W
R26	R-R151K	150 ohms	10%	1 W

November 1968 Printed in Japan

SCHEMATIC DIAGRAM

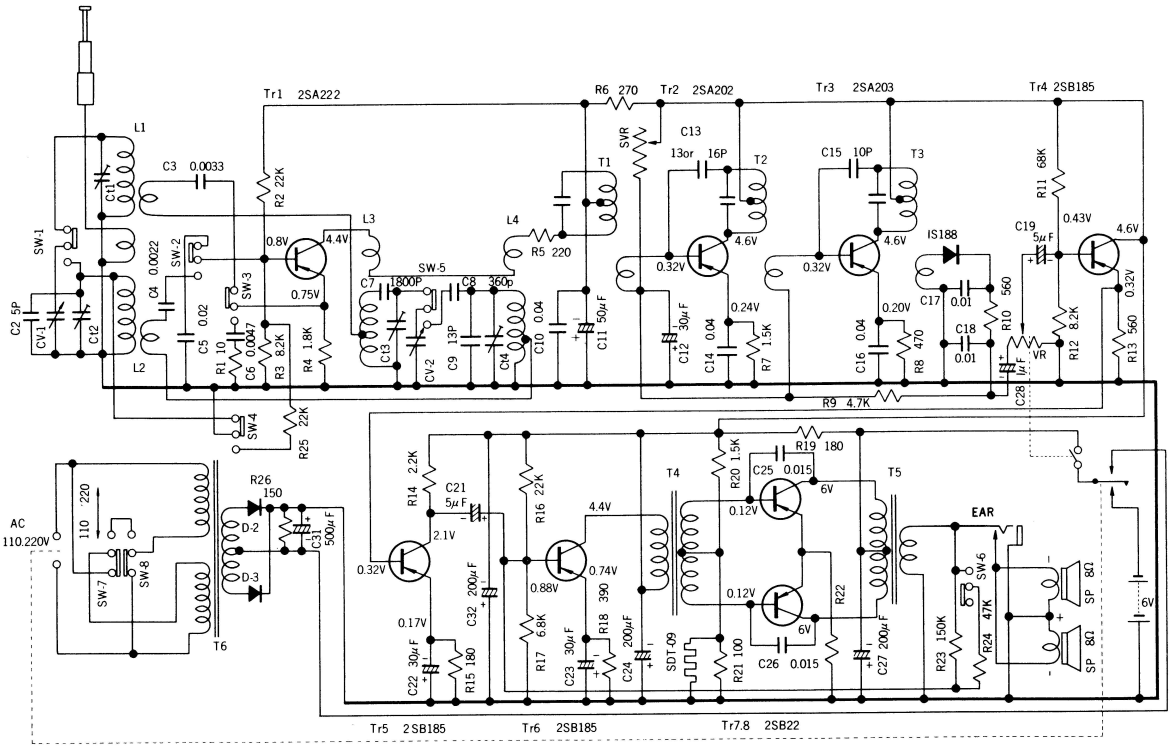

PARTS LOCATION

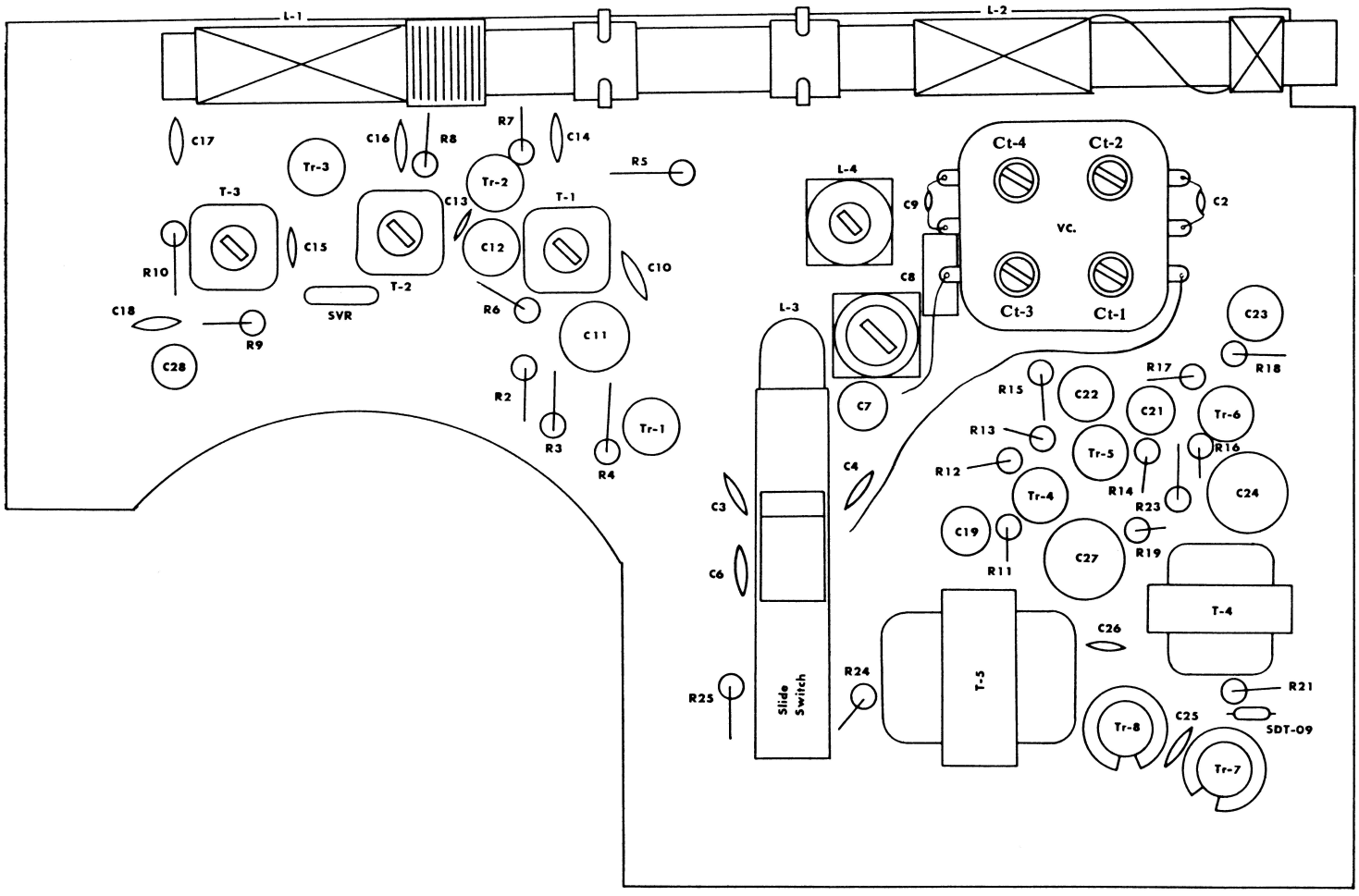
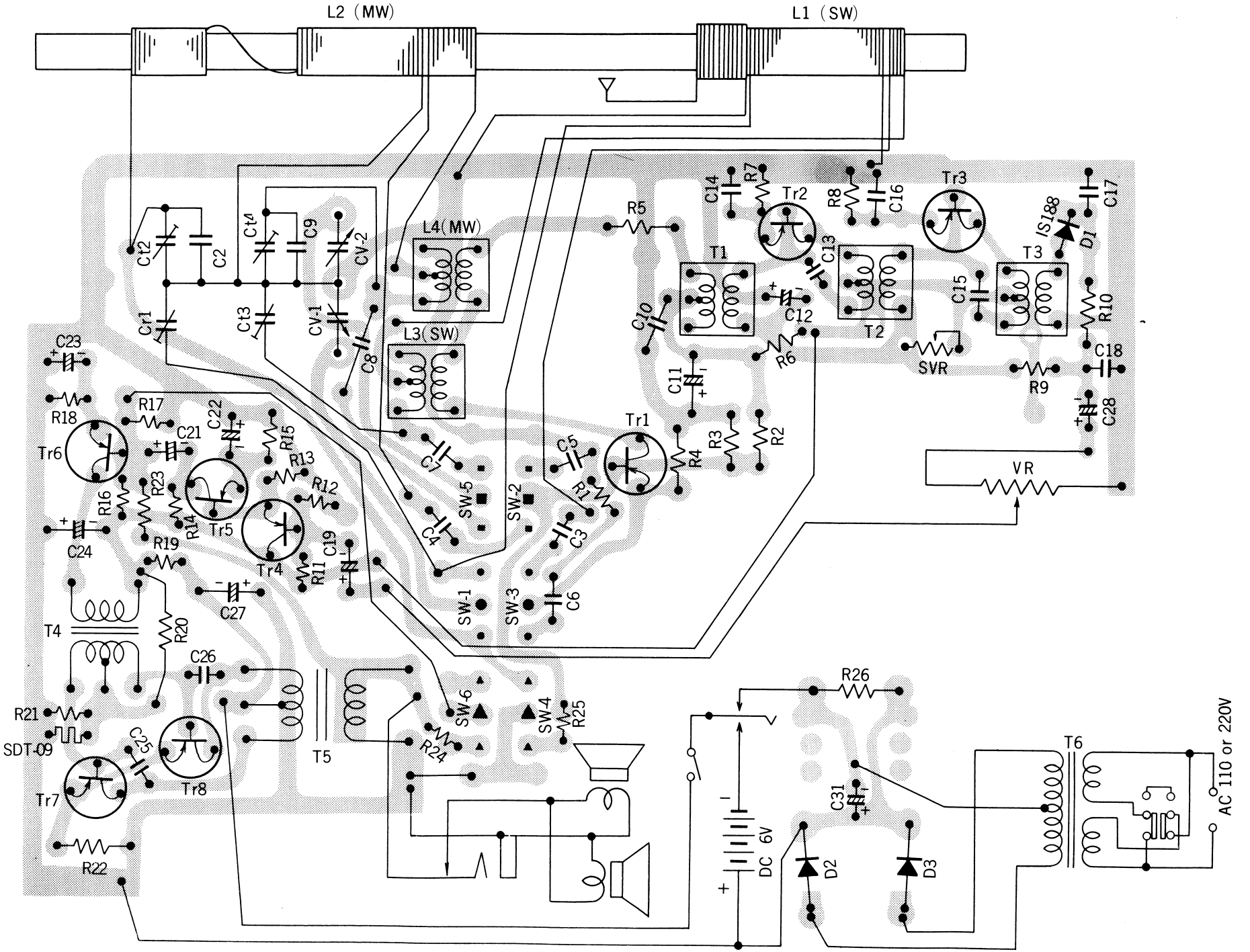
PARTS WIRING ILLUSTRATION