SANYO

8-transistor Portable Radio

MODEL 8S-723

SERVICE MANUAL

SANYO ELECTRIC CO., LTD.
INTERNATIONAL DIVISION : SANYO ELECTRIC TRADING CO., LTD.
OSAKA, JAPAN

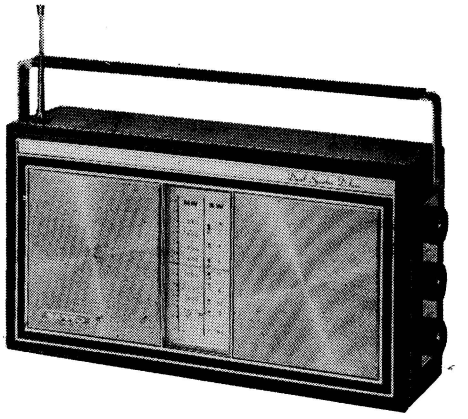

SPECIFICATIONS

Frequency range ····· BC 530–1,605 Kc
SW 3.2–12 Mc
Intermediate frequency ····· 455 Kc
Transistor ····· 2SA222 ×1 ····· Frequency converter
2SA202 ×1 ····· 1st IF amplifier
2SA203 ×1 ····· 2nd IF amplifier
2SB185 ×2 ····· Audio amplifier
2SB185 ×1 ····· Audio driver
2SB22 ×1 ····· Power amplifier
Diode ····· 1S188 ×1 ····· Detector & AGC
Thermistor ····· SDT–09 ×1 ····· Temperature compensator
Output power ····· Undistorted 1000 mW
Maximum 630 mW
Current drain ····· No signal 15 mA
Maximum 235 mA
Loudspeaker ····· 4″ permanent dynamic ×2
Voice coil impedance 8 ohm
Battery ····· 6V : (UM-1) ×4
Dimensions ····· 11⅜″ wide × 6⅛″ high × 2¾″ deep
Weight ····· 4 lbs.

ALIGNMENT PROCEDURES

(1) Alignment of Semi-fixed resistor
Apply 6 volt to the receiver as power souce and make a receiver turn in no signal (Station).
Connection a Volt-meter (range; 1V) between two points A and B as figure.
Adjust the volume of Semi-fixed volume in order to obtain 0.3 volt defrection.

(2) IF and RF alignment
Apply volt-meter across the voice coil.
Volume control should be at maximum position. Output of signal generator should be no higher than necessary to obtain proper output reading in order to avoid AGC function.

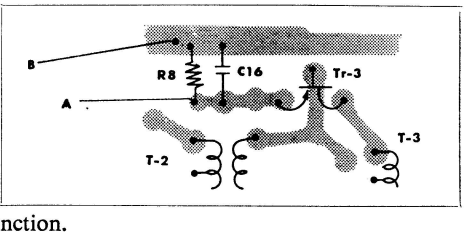

STEP	SIGNAL GENERATOR COUPLING	SIGNAL GENERATOR FREQUENCY	RADIO DIAL SETTING	ADJUST FOR MAXIMUM OUTPUT
✳ *IF ALIGNMENT*				
1	Radiate signal through the loop antenna, which connected with signal generator output cable.	455 Kc	Lower end	T-3 T-2 T-1
✳ *BROADCAST RF ALIGNMENT*				
2	Radiate signal through the loop antenna, which connected with signal generator output cable.	530 Kc	Lower end	L-4
3		1,605 Kc	Upper end	BC osc, trim. Ct-4
4		Repeat steps 2 and 3		
5		600 Kc	600 Kc	L-2
6		1,400 Kc	1,400 Kc	BC ant. trim. Ct-2
7		Repeat steps 5 and 6		
✳ *SHORT WAVE RF ALIGNMENT*				
8	Radiate signal through the loop antenna, which connected with signal generator output cable.	3.2 Mc	Lower end	L-3
9		12 Mc	Upper end	SW osc. trim. Ct-3
10		Repeat steps 8 and 9		
11		3.4 Mc	3.4 Mc	L-1
12		11.O Mc	11.O Mc	SW ant. trim. Ct-1
13		Repeat steps 11 and 12		

PARTS LIST

PARTS NO.	DISCRIPTION	SYMBOL NO.	Q'TY
TRANSISTORS			
2SA222	Transistor	Tr-1	1
2SA202	〃	Tr-2	1
2SA203	〃	Tr-3	1
2SB185	〃	Tr-4, 5, 6	3
2SB22	〃	Tr-7, 8	2
DIODE & THERMISTOR			
1S188	Diode		1
SDT-09	Thermistor		1
COILS			
R-S85240	Antenna coil complete	L-1, 2	1
R-W2630	Antenna coil		1
R-445062	Antenna holder		2
R	Antenna tube		1
R-W8549	Oscillator coil	L-4	1
R-W8548	〃	L-3	1
TRANSFORMER			
R-W5T008	IFT	T-1	1
R-W5T009	IFT	T-2	1
R-W5T043	IFT	T-3	1
R-W6181	Input transformer	T-4	1
R-W6560	Output transformer	T-5	1
CONTROLS			
R-C1523	Variable capacitor	CV-1, 2	1
R-R11011	Semi fixed resistor (100 k ohm)	CT-1, 2, 3, 4	1
R-116555	Variabie resistor		1
LOUDSPEAKER			
R-S6601	Speaker		2
ELECTROLYTIC CAPACITORS			
R-C9080	Electrolytic capacitor (100 μF/3 v)	C12, 22, 23	3
R-C9525	〃 (50 μF/9 v)	C11	1
R-C9077	〃 (200 μF/ 6v)	C24, 27	2
R-C9078	〃 (5 μF/ 6v)	C19, 21, 28	3

PARTS NO.	DESCRIPTION	Q'TY
MISCELLANEOUS		
R-485112	Cabinet	1
R-315211	Front polystrol panel	1
R-325294	Dial	1
R-265689	Front decoration metal	1
R-265690	Speaker grill (left side)	1
R-265691	〃 (right side)	1
R-265163	Badge	1
R-325295	Polystyrol base for knob	1
R-325296	Polystyrol panel for earphone	1
R-265692	Decoration metal (TU., SELECT & VOLUME knob)	1
R-395205	Handle fixing knob	2
R-245160	Stud nut	3
R-S85166	Battery terminal (—) complete	1
R-S85254	Handle complete	1
R-325299	Tuning knob	1
R-325300	Volume & select knob	2
R-265693	Decoration metal (TU., VOL. & SEL.)	3
R-115528	Chassis	1
R-415289	Printed circuit board	1
R-115529	Fixing metal for pulley	1
R-115530	Fixing metal for SW lever	1
R-115531	SW lever (long)	1

PARTS NO.	DESCRIPTION	Q'TY
MISCELLANEOUS		
R-115532	SW lever (Short)	1
R-265694	Back plate	1
R-S85237	Pointer complete	1
R-245323	Short for pulley	1
R-445082	VC cushion	1
R-245324	Shaft for drum	1
R-S85161	Tuning shaft complete	1
R-275024	Pulley shaft	4
R-325017	Pulley	2
R-245240	〃	2
R-24497	〃	2
R-265193a	Fixing metal for ANT. coil	1
R-33226	Drum	1
R-15041	Coil spring (drum)	2
R-115297a	Battery terminal (+)	1
R-44031	Cushion for battery terminal (+)	1
R-435077	Dial rope	1
R-115546	SW. stopper	1
R-S4583	Slide switch	1
R-S1549	Red antenna	1
R-23596	Lug board	1
R-S2040	Earphone jack	1
R-S8186	External antenna plug complete	1
R-S2025b	External antenna socket	1
R-S2530	External power source socket	1
R-S4586	Special switch	1
R-235010	Lug board	2

SYMBOL NO.	DESCRIPTION	Q'TY
RESISTOR & CAPACITOR		
R22	1 ohms ±10% ¼W Carbon & Solid	1
R1	33 ohms 〃 〃 〃	1
R21	100 ohms 〃 〃 〃	1
R15, 19	180 ohms 〃 〃 〃	2
R5	220 ohms 〃 〃 〃	1
R6	270 ohms 〃 〃 〃	1
R18	390 ohms 〃 〃 〃	1
R8	470 ohms 〃 〃 〃	1
R10, 13	560 ohms 〃 〃 〃	2
R7	1.5 k ohms 〃 〃 〃	1
R4, 20	1.8 k ohms 〃 〃 〃	2
R14	2.2 k ohms 〃 〃 〃	1
R9	4.7 k ohms 〃 〃 〃	1
R17	6.8 k ohms 〃 〃 〃	1
R3, 12	8.2 k ohms 〃 〃 〃	2
R2, 16, 25	22 k ohms 〃 〃 〃	3
R24	47 k ohms 〃 〃 〃	1
R11	68 k ohms 〃 〃 〃	1
R23	150 k ohms 〃 〃 〃	1
C7	1800 pF ± 5% 25-50V Styrol	1
C8	375 pF 〃 〃 〃	1
C4	0.0022 μF ±20% 〃 Mylar	1
C3	0.0033 μF 〃 〃 〃	1
C6	0.0047 μF 〃 〃 〃	1
C17, 18	0.01 μF 〃 〃 〃	2
C25, 26	0.015 μF 〃 〃 〃	2
C5	0.02 μF 〃 〃 〃	1
C14, 16	0.04 μF 〃 〃 〃	2
C2, 15	10 pF ±10% 〃 Ceramic	2
C9	13 pF 〃 〃 〃	1
C13	13 pF 〃 〃 Tr-2 Cc=6 only	1
C13	16 pF 〃 〃 Tr-2 Cc=7 only	1
C10	0.04 μF +80 −20 〃 Ceramic	1

7-20100 Printed in Japan

MAIN PARTS CONNECTION

Autenna coil (L-1, 2)

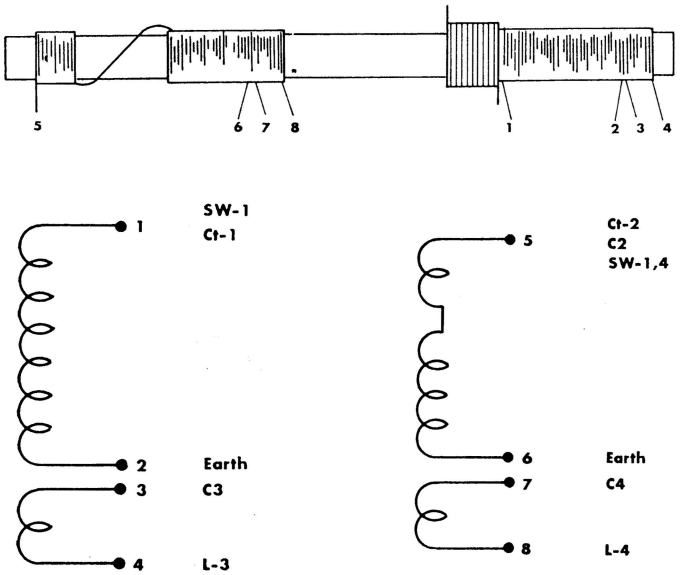

Input trans. (T-4)

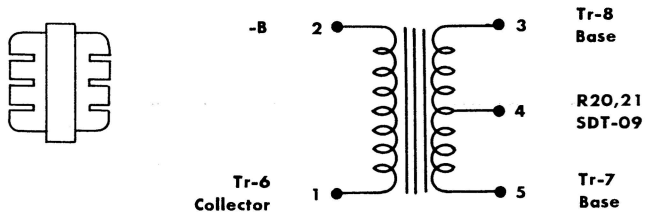

Output trans. (T-5)

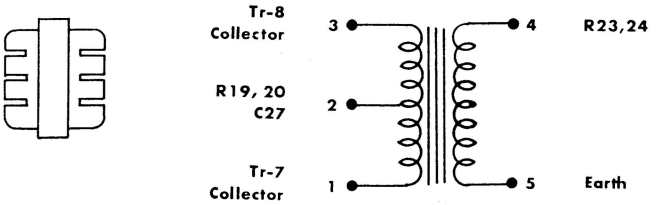

PARTS LOCATION

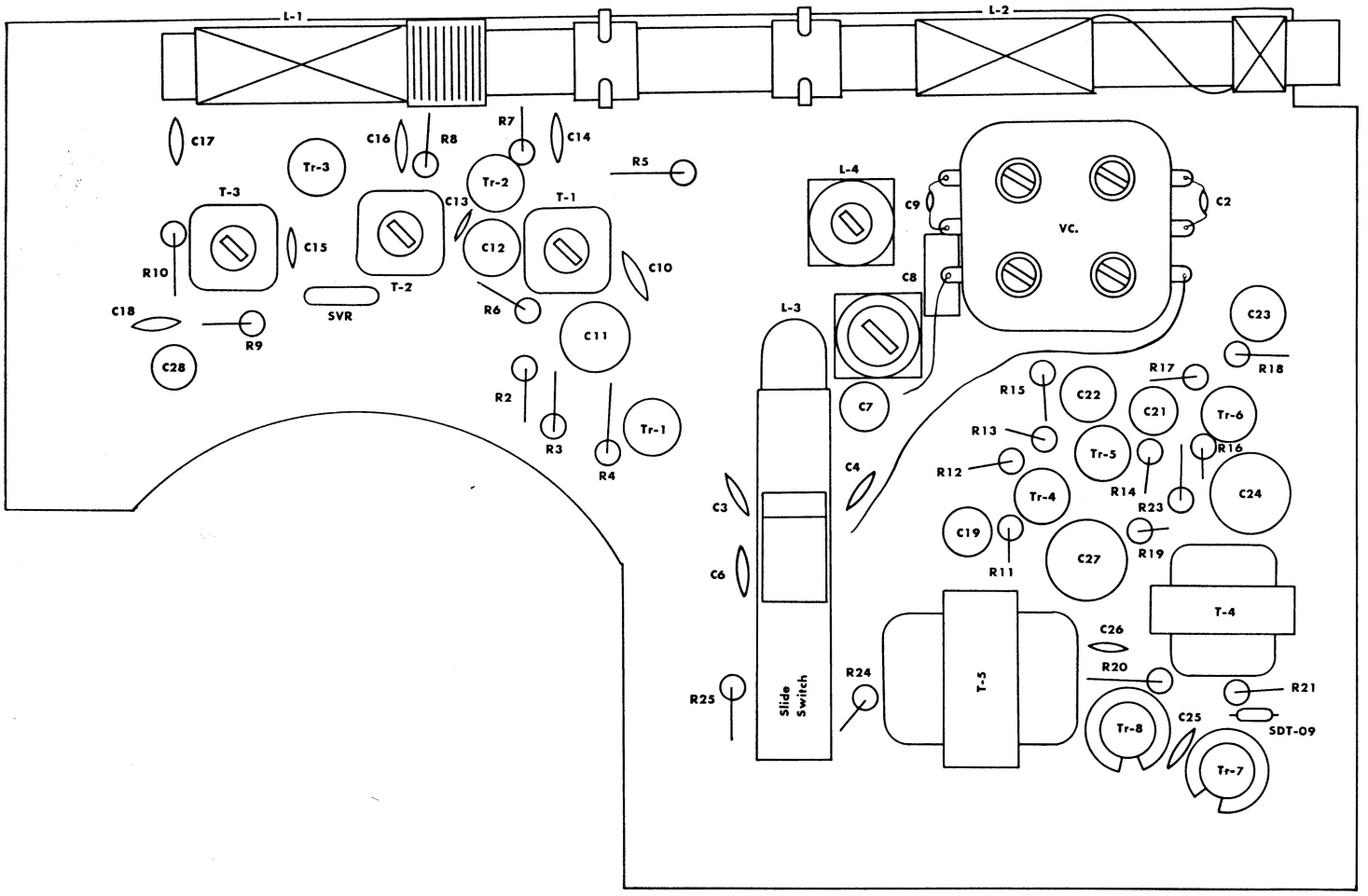

PARTS WIRING ILLUSTRATION

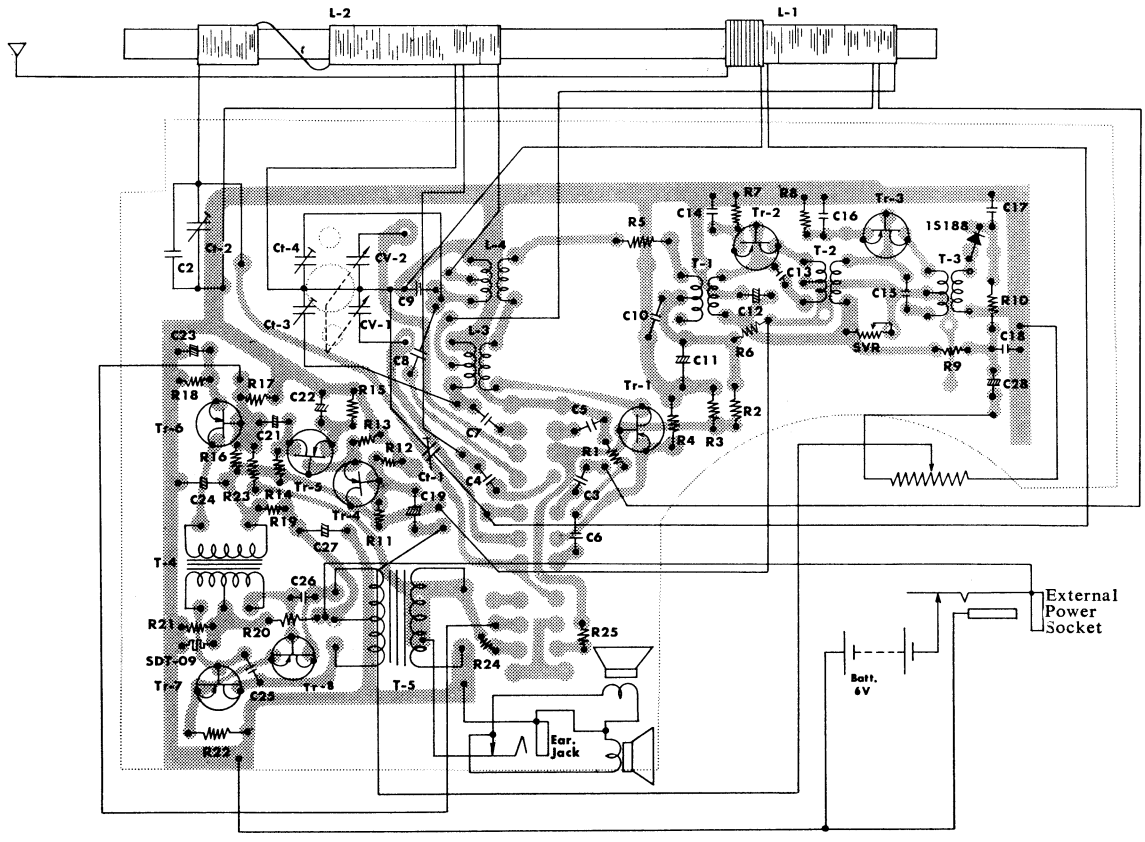

CIRCUIT DIAGRUM

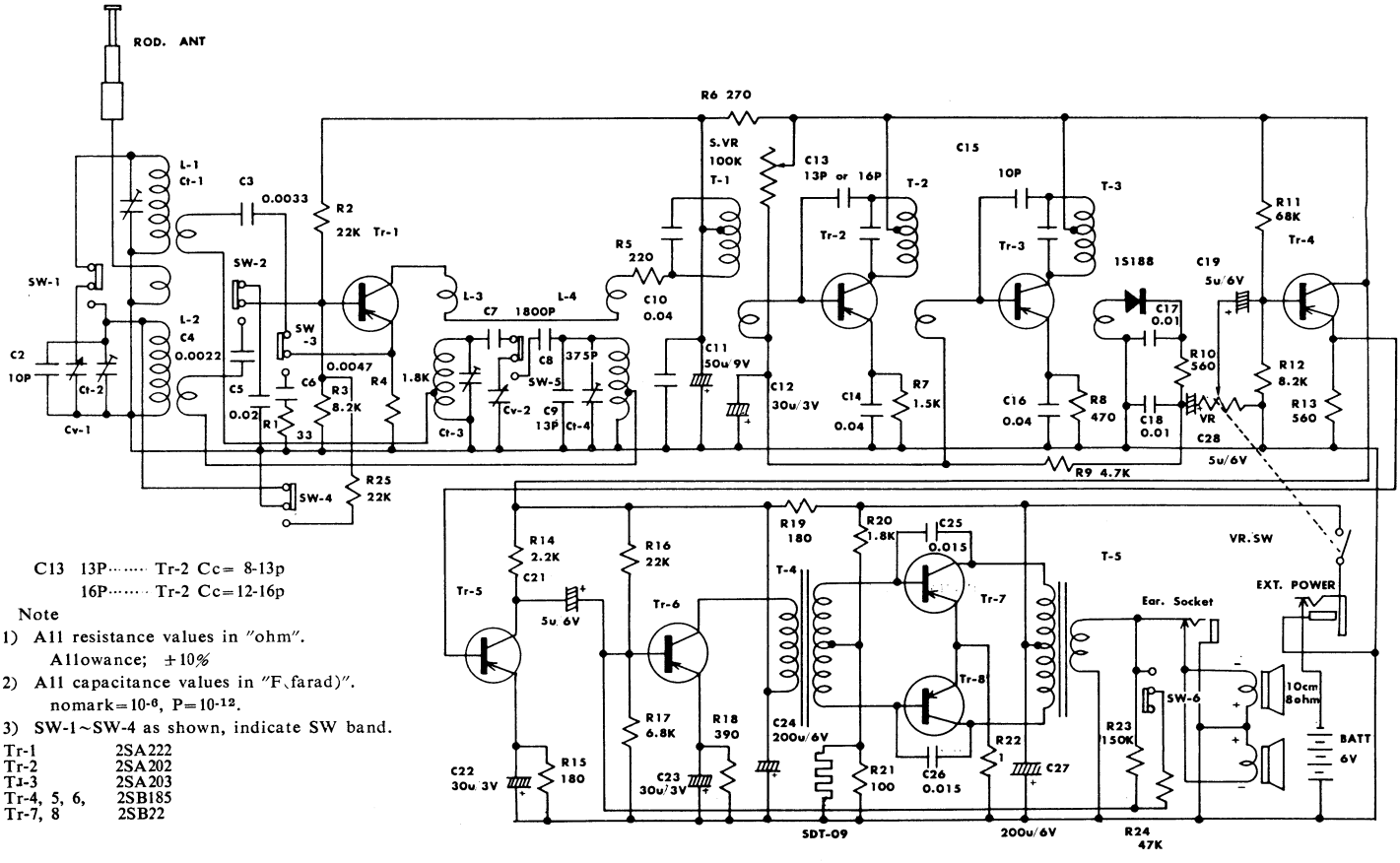

C13 13P····· Tr-2 Cc= 8-13p
16P····· Tr-2 Cc=12-16p

Note

1) All resistance values in "ohm".
   Allowance; ±10%
2) All capacitance values in "F(farad)".
   nomark=10^{-6}, P=10^{-12}.
3) SW-1~SW-4 as shown, indicate SW band.

Tr-1	2SA222
Tr-2	2SA202
Tr-3	2SA203
Tr-4, 5, 6,	2SB185
Tr-7, 8	2SB22