SANYO

8-Transistors, MW/SW Portable Radio

MODEL 8S-721

SERVICE MANUAL

SANYO ELECTRIC CO., LTD.
INTERNATIONAL DIVISION : SANYO ELECTRIC TRADING CO., LTD.
OSAKA, JAPAN

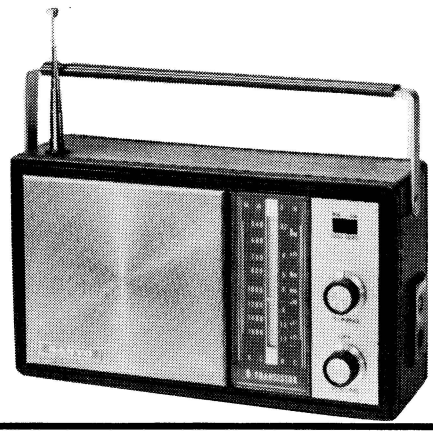

SPECIFICATIONS

FREQUENCY RANGE	SW 3.2–12 MC	
	MW 530–1605 KC	
INTERMEDIATE FREQUENCY	455 KC	
TRANSISTORS	2SA222	Frequency converter
	2SA202	1st IF. amplifier
	2SA203	2nd IF. amplifier
	2SB185×2	AF. amplifier
	2SB185	Audio driver
	2SB22×2	Power amplifier
DIODE	1S188	Detector & AGC

SENSITIVITY (10 mW out put)	SW	52 μV/m
	BC	52 μV/m
OUTPUT POWER	Undistorted	450 mW
	Maximum	280 mW
LOUDSPEAKER	4″ permanent dynamic speaker	
CURRENT DRAIN	No signal	12 mA
	Maximum	120 mA
POWER SOURCE	6V (UM-1) ×4	
DIMENSIONS	9¼″ width×5¼″ height×2⅞″ depth	
WEIGHT	3⅜″ lbs.	

ALIGNMENT PROCEDURES

(1) Alignment of semi-fixed resistor
Apply 6 volt to the receiver by power source and make a receiver turn on at no signal (Station).
Connect a volt-meter (range; 1V) between two points A & B as figured out.
Adjust the semi-fixed resistor so as to obtain 0.40 volt deflection.

(2) IF and RF alignment
Apply volt-meter across the voice coil.
Volume control should be at maximum position. Output of signal generator should be not higher than necessary to obtain proper output reading in order to avoid AGC function.

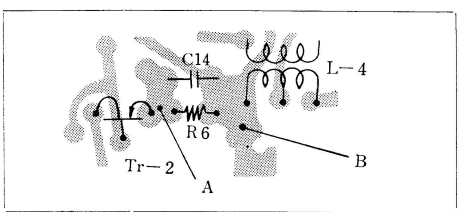

STEP	SIGNAL GENERATOR COUPLING	SIGNAL GENERATOR FREQUENCY	RADIO DIAL SETTING	ADJUST FOR MAXIMUM OUTPUT
※ *IF ALIGNMENT*				
1	Radiate signal through the loop antenna, which connected with signal generator output cable.	455 Kc	Lower end	T-3 T-2 T-1
※ *BROADCAST RF ALIGNMENT*				
2	Radiate signal through the loop antenna, which connected with signal generator output cable.	520 Kc	Lower end	L-4
3		1,680 Kc	Upper end	BC osc. trim. Ct-4
4		Repeat steps 2 and 3		
5		600 Kc	600 Kc	L-2
6		1,400 Kc	1,400 Kc	BC ant. trim. Ct-2
7		Repeat steps 5 and 6		
※ *SHORT WAVE RF ALIGNMENT*				
8	Radiate signal through the loop antenna, which connected with signal generator output cable.	3.15 Mc	Lower end	L-3
9		12.5 Mc	Upper end	SW osc. trim. Ct-3
10		Repeat steps 8 and 9		
11		3.4 Mc	3.4 Mc	L-1
12		11.8 Mc	11.8 Mc	SW ant. trim. Ct-1
13		Repeat steps 11 and 12		

PARTS WIRING ILLUSTRATION

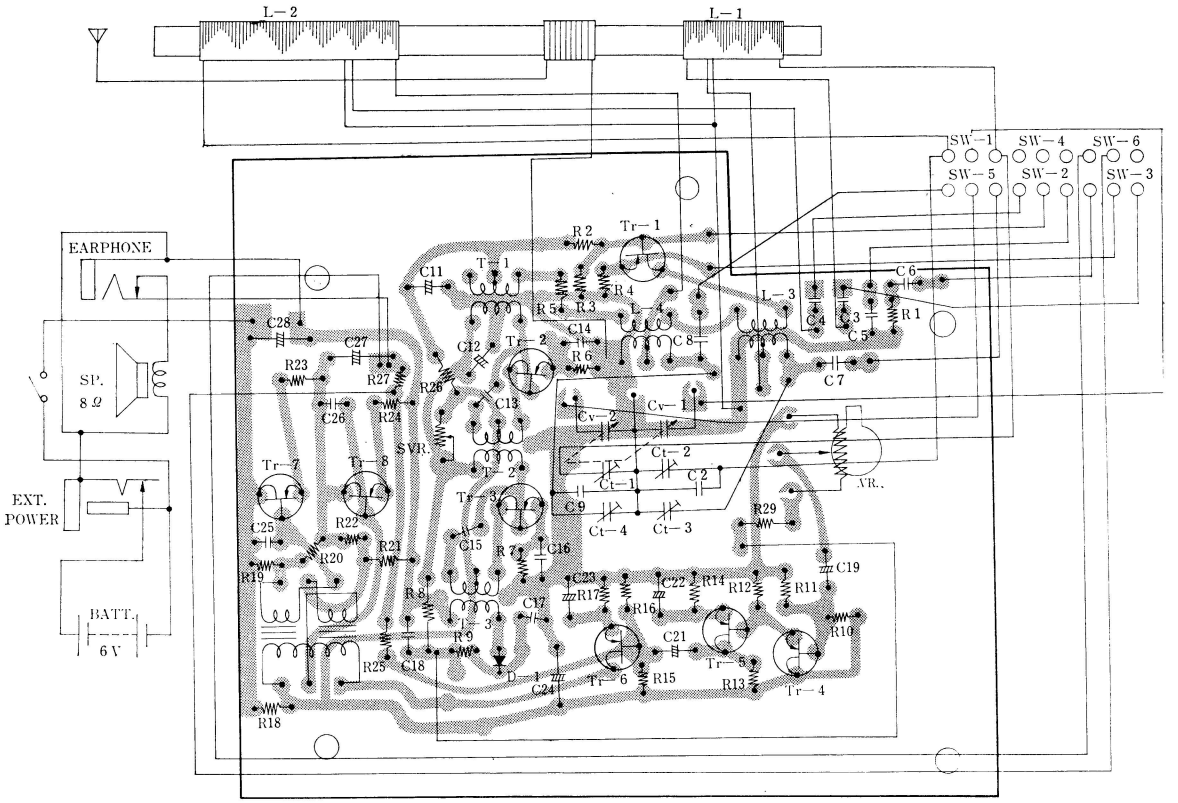

PARTS LOCATION

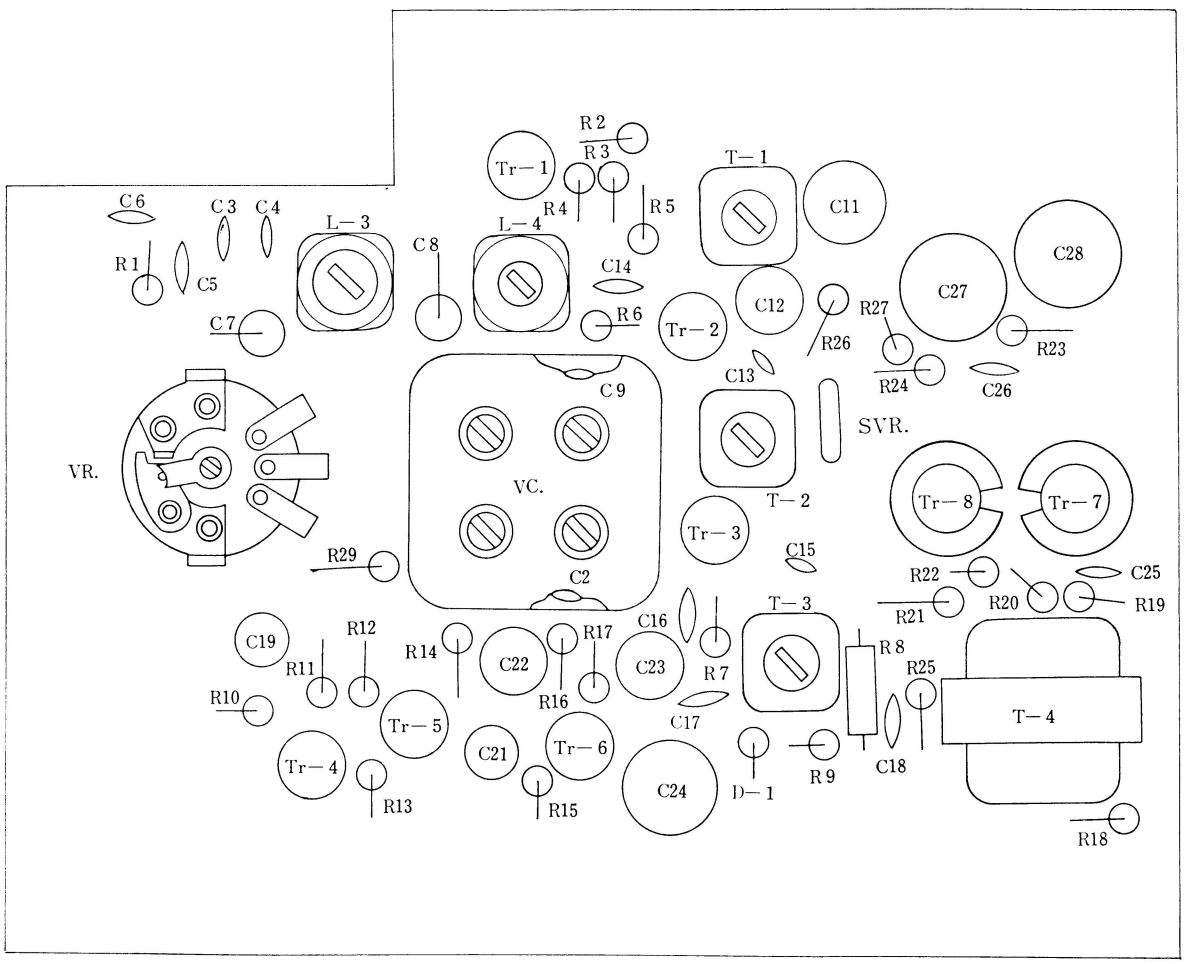

CIRCUIT DIAGRAM

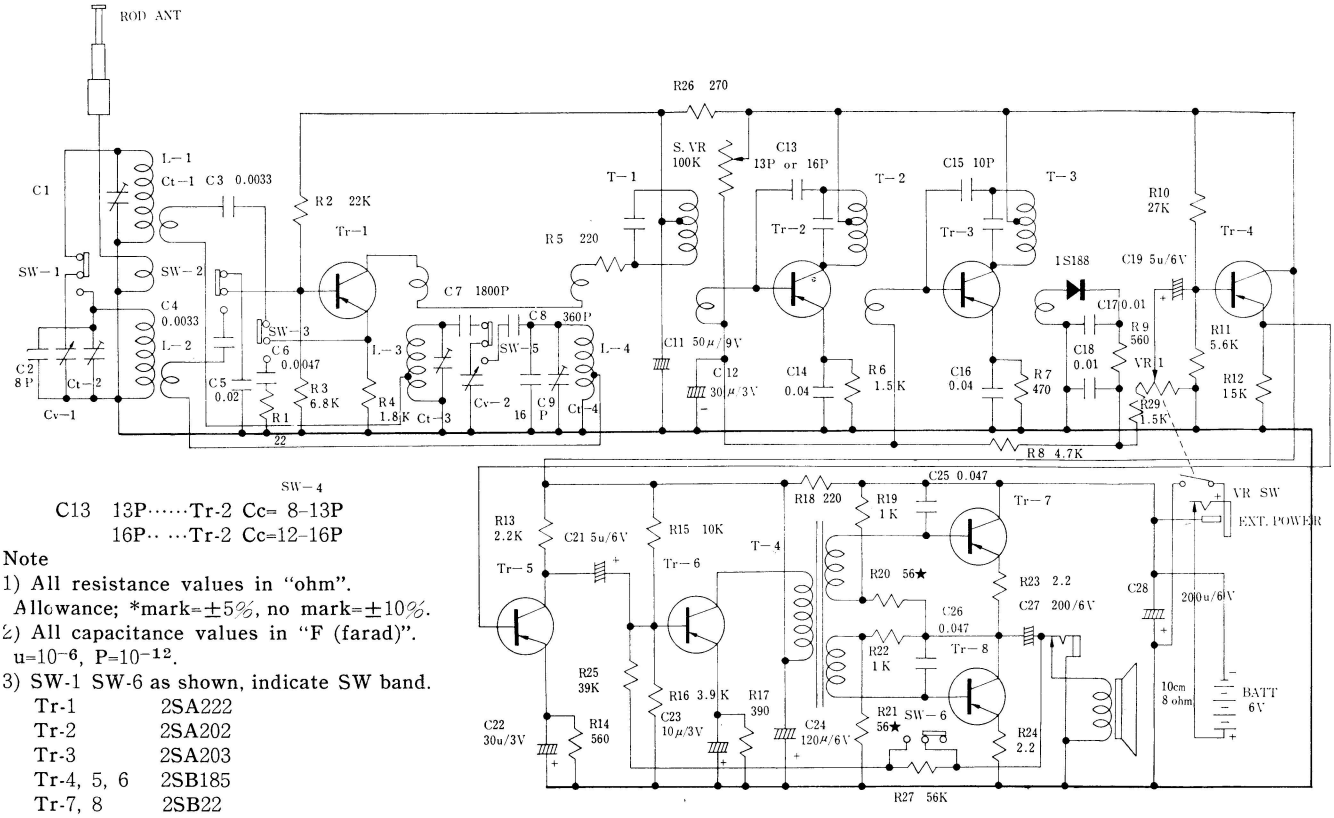

C13 13P·····Tr-2 Cc= 8-13P
16P·· ···Tr-2 Cc=12-16P

Note
1) All resistance values in "ohm".
Allowance; *mark=±5%, no mark=±10%.
2) All capacitance values in "F (farad)".
u=10^{-6}, P=10^{-12}.
3) SW-1 SW-6 as shown, indicate SW band.

Tr-1	2SA222
Tr-2	2SA202
Tr-3	2SA203
Tr-4, 5, 6	2SB185
Tr-7, 8	2SB22

PARTS LIST

PARTS No.	DESCRIPTION	SYMBOL No.	Q'TY
TRANSISTORS & DIODE			
2SA222	Transistor	Tr-1	1
2SA202	〃	Tr-2	1
2SA203	〃	Tr-3	1
2SB185	〃	Tr-4, 5, 6	3
2SB22	〃	Tr-7, 8	2
1S188	〃	D-1	1
COILS & TRANSFORMERS			
R-W2635	Antenna coil	L-1, 2	1
R-W8548	Oscillator coil	L-3	1
R-W8549	〃	L-4	1
R-W5T008	I.F. transformer	T-1	1
R-W5T009	〃	T-2	1
R-W5T043	〃	T-3	1
R-W6597	Input transformer	T-4	1
CONTROLS			
R-R11011	Semi-fixed resistor		1
R-C1523	Variable capacitor	Cv-1, 2 Ct-1, 2, 3, 4	1
R-R116519	Variable resistor		1
LOUDSPEAKER			
R-S6577	Speaker		1

ELECTROLYTIC CAPACITOR			
R-C9078	Electrolytic capacitor 5μF/6V	C19, 21	1
R-C9080	〃 30μF/3V	C12, 22, 23	3
R-C9525	〃 50μF/9V	C11	1
R-C9086	〃 120μF/6V	C24	1
R-C9077	〃 200μF/6V	C27, 28	2

SYMBOL No.	DESCRIPTION				Q'TY
RESISTORS					
R23, 24	2.2 ohm	±10%	¼W	Carbon or solid	2
R1	22 ohm	〃	〃	〃	1
R20, 21	56 ohm	±5%	〃	〃	2
R5, 18	220 ohm	±10%	〃	〃	2
R26	270 ohm	〃	〃	〃	1
R17	390 ohm	〃	〃	〃	1
R7	470 ohm	〃	〃	〃	1
R9, 14	560 ohm	〃	〃	〃	2
R19, 22	1 kohm	〃	〃	〃	2
R6, 12, 29	1.5 kohm	〃	〃	〃	3
R4	1.8 kohm	〃	〃	〃	1
R13	2.2 kohm	〃	〃	〃	1
R16	3.9 kohm	〃	〃	〃	1
R8	4.7 kohm	〃	〃	〃	1
R11	5.6 kohm	〃	〃	〃	1
R3	6.8 kohm	〃	〃	〃	1
R15	10 kohm	〃	〃	〃	1
R2	22 kohm	〃	〃	〃	1
R10	27 kohm	〃	〃	〃	1
R25	39 kohm	〃	〃	〃	1
R27	56 kohm	〃	〃	〃	1

PARST LIST

CAPACITORS					
C3, 4	0.0033 μF	±20%	35-50V	Mylar	2
C6	0.0047 μF	〃	〃	〃	1
C17, 18	0.01 μF	〃	〃	〃	2
C5	0.02 μF	〃	〃	〃	1
C14, 16	0.04 μF	〃	〃	〃	2
C25, 26	0.047 μF	〃	〃	〃	2
C2	8 pF	±10%	〃	Ceramic	1
C15	10 pF	〃	〃	〃	1
C13	13 pF	〃	Tr-2 Cc=6 only	〃	1
C13	16 pF	〃	Tr-2 Cc=7 only	〃	1
C9	16 pF	〃	35-50V	〃	1
C7	1800 pF	±5%	〃	Styrol	1
C8	360 pF	〃	50-500V	Mica or Styrol	1

PART No.	DESCRIPTION	Q'TY
MISCELLANEOUS		
R-265188	Speaker grille	1
R-425540	Cushion (between the SP. grille & front panel)	1
R-325058a	Plastic ring (through the rod ant.)	1
R-295163	Badge	1
R-475384	Battery sheet	1
R-315215	Front panel	1
R-485114	Cabinet	1
R-S85243	Handle complete	1
R-325054	Dial cover	1
R-245333a	Fixing metal for handle	1
R-261139	Special washer (handle)	2
R-24897	〃 (〃)	2
R-265716	Back plate	1
R-325309	Elucidation panel (earphone & EXT. power)	1
R-265717	Front decoration panel	1
R-475547	Specification sheet	1
R-355181	Washer (handle)	2
R-245128	Stud nut	4
R-115295	Battery terminal (+)	1

PARTS No.	DESCRIPTION	Q'TY
MISCELLANEOUS		
R-S85165	Battery terminal (−) complete	1
R-325181	Fixing plastic part for battery terminal	1
R-115297a	Battery terminal (+)	1
R-S85166a	〃 (−) complete	1
R-375014	Battery pull out ribbon	1
R-325109	Knob	2
R-265328	Decoration metal for knob	2
R-265330	〃	2
R-35170	Battery holder	1
R-325182a	Earphone case	1
R-435086	Protector (between the cabinet & antenna holder)	1
R-435087	〃 (〃)	1
R-265193a	Antenna coil holder	1
R-S85073	Pointer complete	1
R-33226	Drum	1
R-15041	Coil spring	1
	Cushion (ANT. coil)	1
	Tuning rope (0.3φ 600 mm)	2
R-12011	Lug	1
R-115540	Chassis	1
R-265718	Back plate	1
R-115543	Fixing metal for slide SW.	1
R-415294	Printed circuit board	1
R-S85244	VR. shaft complete	1
R-445082	VC. cushion	1
R-245324	Tuning shaft	1
R-245119	Pulley shaft	1
R-245134	Pulley	2
R-365064	Back plate (slide SW.)	2
R-S4544	Slide switch	1
R-S1563	Rod antenna	1
R-S6560	Earphone complete	1
R-S2040	Socket	1
R-S2530	EXT. power socket	1
R-S3008	Lug	2
R-12011	〃	1

7-20110 Printed in Japan