SANYO

8-transistor, BC-SW Portable Radio

MODEL 8S-710N

SERVICE MANUAL

SANYO ELECTRIC CO., LTD.

INTERNATIONAL DIVISION: SANYO ELECTRIC TRADING CO., LTD.
OSAKA, JAPAN

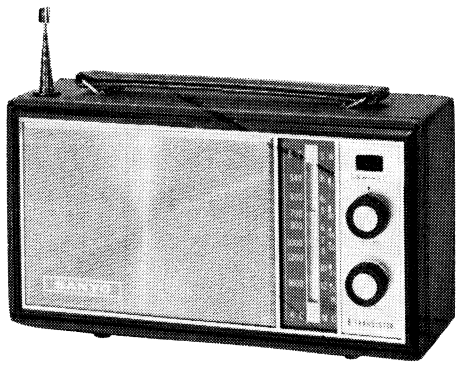

SPECIFICATIONS

Frequency Range ····· BC 530-1605 KC
SW 3.2-12 MC

Intermediate Frequency ····· 455 KC

Sensitivity (for 10mW output) ····· BC 100 μV/m
SW 160 μV/m

Output Power ····· Undistorted 200 mW
Maximum 300 mW

Power Supply ····· DC 4.5V (three "D-size" standard flashlight batteries or optional AC adaptor thru DC 4.5V jack)

Current Drain ····· No signal 10 mA
Maximum 120 mA

Speaker ····· $3\frac{1}{8}$ permanent dynamic speaker
7 ohm voice coil impedance

Dimensions ····· 8″ wide × $4\frac{1}{4}$″ high × $2\frac{1}{2}$″ deep

Weight ····· $2\frac{1}{4}$ lbs. (1 kilo-grams)

ALIGNMENT PROCEDURES

PROCEDURES	POSITION OF BAND SWITCH	SIGNAL RADIATION	FREQUENCY OF SIGNAL GEN.	DIAL SETTING OF RADIO	COMPONENTS TO BE ADJUSTED FOR MAXIMUM OUTPUT	
IF STAGE	BC	IRE LOOP	455 KC	Lowest End	IFT's, T3, T2 and T1	
BC BAND	BC	IRE LOOP	520 KC	Lowest End	BC Oscillator Coil	L4
COVERAGE	〃	〃	1650 KC	Highest End	BC Oscillator Trimmer	Ct4
BC BAND	〃	〃	600 KC	600 KC	BC Antenna Coil	L2
TRACKING	〃	〃	1400 KC	1400 KC	BC Antenna Trimmer	Ct2
SW BAND	SW	IRE LOOP	3.1 MC	Lowest End	SW Oscillator Coil	L3
COVERAGE	〃	〃	12.4 MC	Highest End	SW Oscillator Trimmer	Ct3
SW BAND	〃	〃	3.5 MC	3.5 MC	SW Antenna Coil	L1
TRACKING	〃	〃	11.8 MC	11.8 MC	SW Antenna Trimmer	Ct1

ELECTRIC MAIN PARTS

PART NO.	DESCRIPTION	
2SA222	Transistor	Tr1
2SA202AA	〃	Tr2
2SA201A	〃	Tr3
2SB185AA	〃	Tr4 Tr5 Tr6
2SB187A	〃	Tr7 Tr8
1S188	Diode	D1
SDT-20	Thermistor	TH1
R-R116558	Variable Resistor	VR
R-C1523	Variable Capacitor	
R-S4268-2	Slide Switch	
R-S1601	Telescopic Antenna	
R-S6542	Speaker $3\frac{1}{8}$″ 7 ohms	
R-S6560	Earphone	

PART NO.	DESCRIPTION	
R-W2650	Antenna Coil	L1 & L2
R-W8548-4	Oscillator Coil SW	L3
R-W8549-4	Oscillator Coil BC	L4
R-W6533	Input Transformer	T4
R-W6545	Output Tranformer	T5
R-S2040	Jack - earphone	
R-S2540	Jack - DC 4.5V input	
R-C9081	Electrolytic Capacitor	50uF 9V C10 C22
R-C9079	〃 〃	10uF 3V C11
R-C9078	〃 〃	5uF 6V C18 C19
R-C9080	〃 〃	30uF 3V

PARTS LIST

PARTS NO.	DESCRIPTION
R-A8710	Cabinet Assembly
R-S85260	Knob - volume & tuning
R-S85089a	Battery Terminal - negative
R-115134	Battery Terminal - positive
R-35170	Battery Holder Tube
R325346	Plastic Mount - jack mtg
R-475638	Specification Sheet
R-475155	Battery Instruction Sheet
R-475638	Knob Felt
R-235175	Pointor
R-S85261	Tuning Shaft
R-315070a	Drum
R-44046	Cushion - variable cap. mtg
R-15113a	Tension Spring
R-	Dial Cord tetron 0.3ϕ 350 mm
R-395215	Switch Actuator Lever

SYMBOL NO.	DESCRIPTION			
FIXED VALUE RESISTORS				
R1	22	Kohms	±10%	¼W
R2 R11	8.2K	〃	〃	〃
R3	2.2K	〃	〃	〃
R4 R19	180	〃	〃	〃
R5	82K	〃	〃	〃
R6 R13 R14	1K	〃	±10%	〃
R7	350	〃	〃	〃
R8	680	〃	±20%	〃
R9	4.7K	〃	±10%	〃
R10	68K	〃	〃	〃
R12	3.3K	〃	±10%	〃
R15	33K	〃	〃	〃
R16	6.8K	〃	〃	〃
R17	270	〃	〃	〃
R18	2.7K	〃	〃	〃
R20	33	〃	±10%	〃
R21	56K	〃	〃	〃
R22	2.2	〃	〃	〃

SYMBOL NO.	DESCRIPTION			
FIXED VALUE CAPACITORS				
C1	3pF	±0.25pF	35WV	Ceramic
C2	5pF	±0.5pF	〃	〃
C3	0.0022μF	±20%	〃	Mylar Square
C4 C13	0.02μF	+80%	〃	Ceramic
C5	0.0047μF	+20%	〃	Mylar Square
C6	1800pF	±5%	〃	Styrol
C7	370pF	〃	〃	〃
C8	13pF	±10%	〃	Ceramic
C9	0.0015μF	±20%	〃	Mylar Square
C12	15pF or 17pF	±10%	〃	Ceramic
C14	12pF	〃	〃	〃
C15 C16	0.02μF	+80%	〃	〃
C17	0.005μF	〃	〃	〃
C23 C24	0.01μF	±20%	〃	Mylar Square

Printed in Japan

MAIN PARTS LOCATION

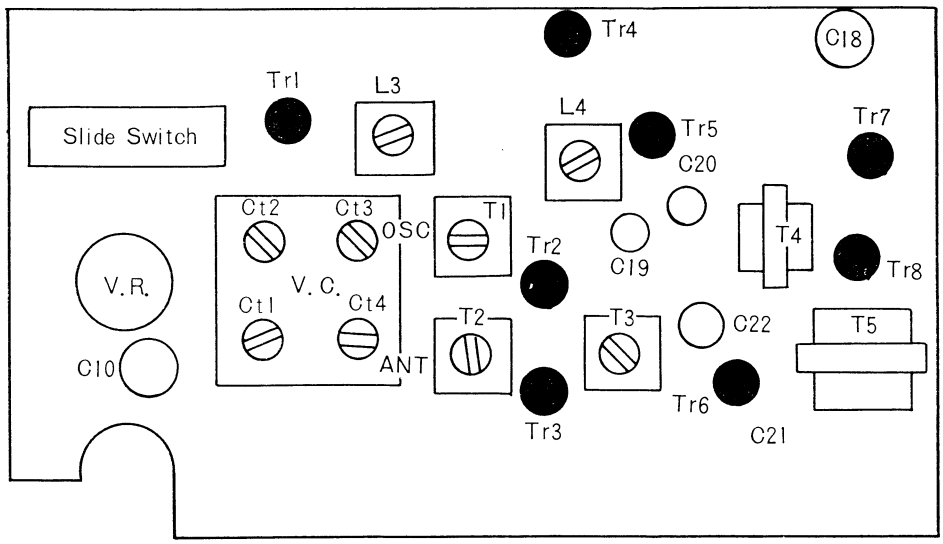

INTER PARTS CONNECTION

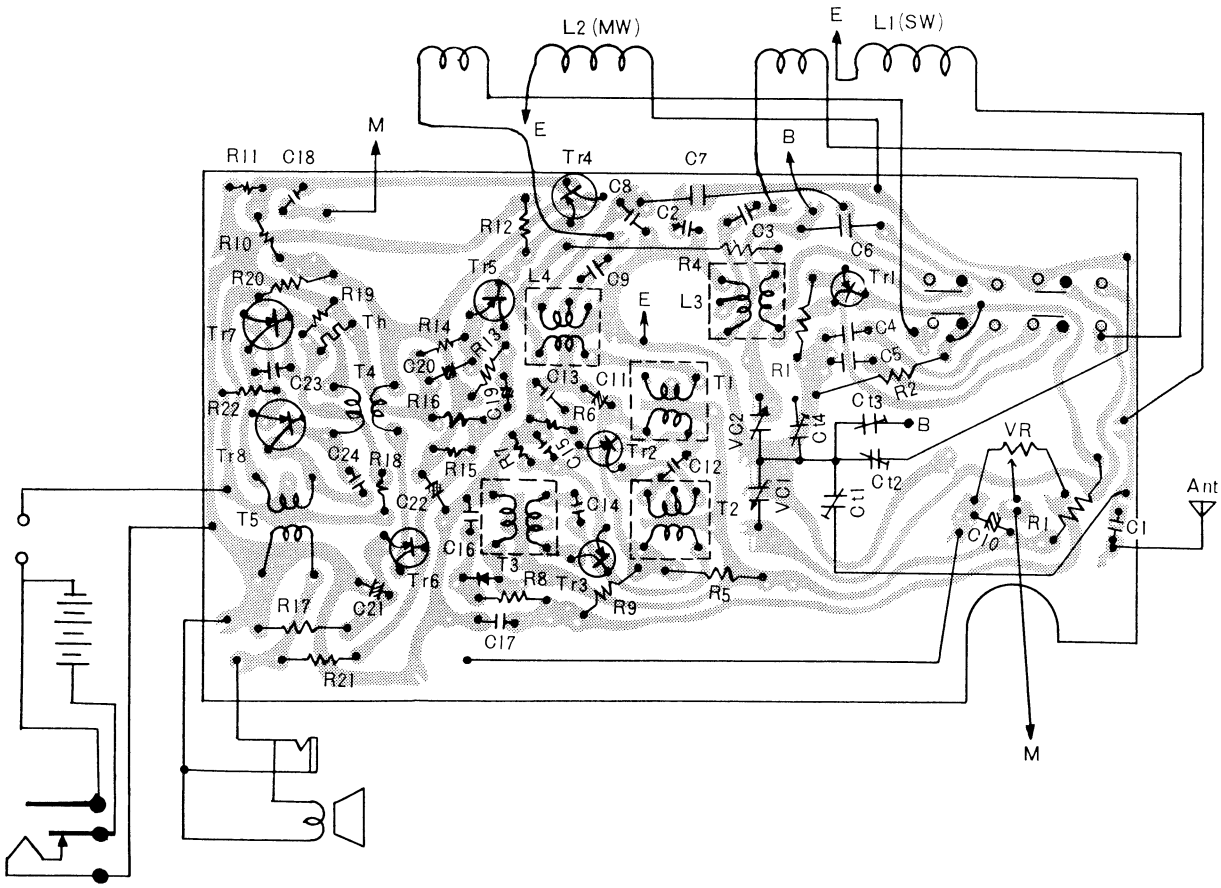

CIRCUIT DIAGRAM

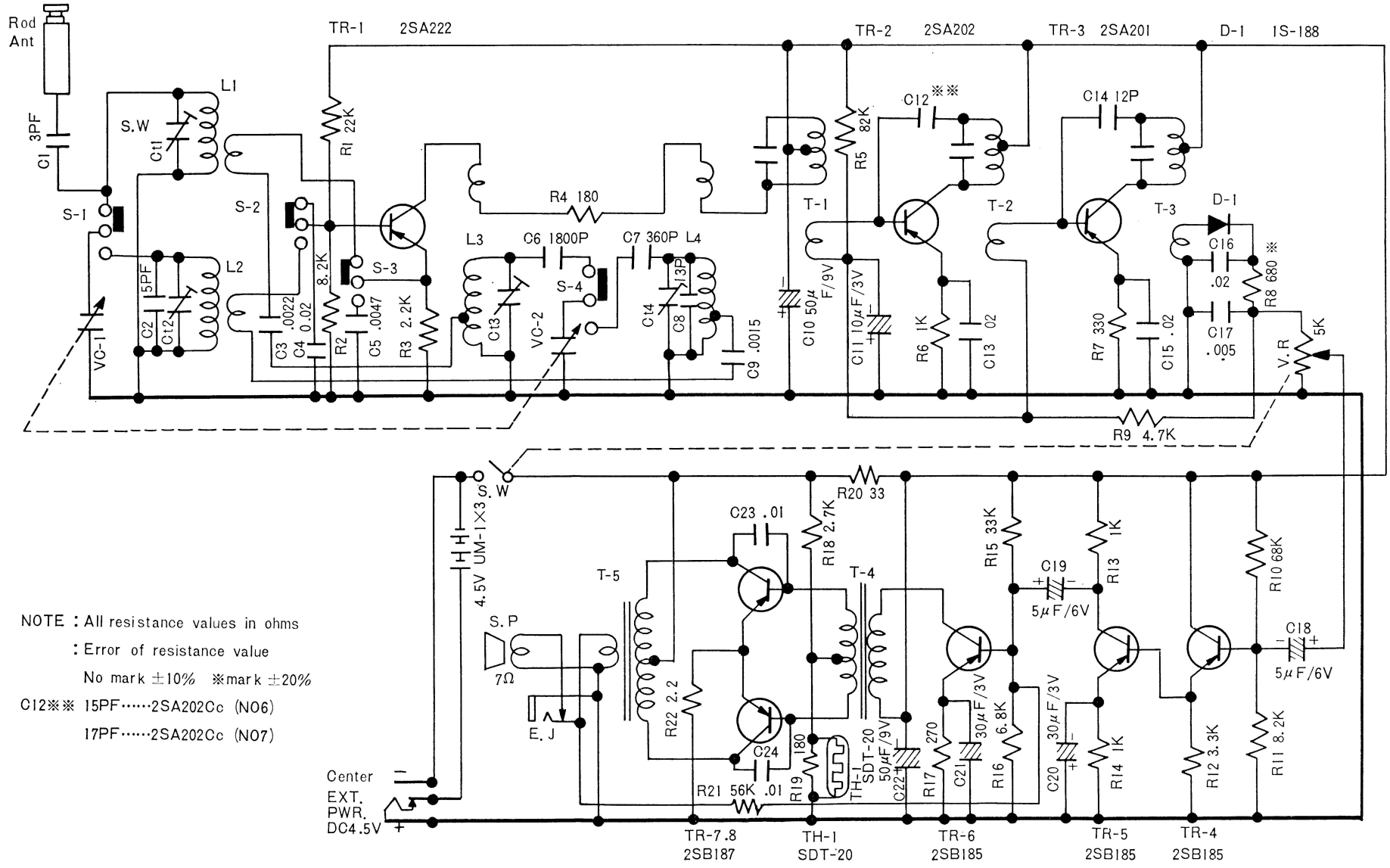

NOTE : All resistance values in ohms

: Error of resistance value

No mark ±10% ※mark ±20%

C12※※ 15PF……2SA202Cc (NO6)

17PF……2SA202Cc (NO7)